CITY OF MIAMI SPRINGS, FLORIDA

Mayor Walter Fajet, Ed.D.

Vice Mayor Jorge Santin | **Councilman Joseph Dion**

Councilman Orlando Lamas | **Councilman Fabian Perez-Crespo**

***Decorum**: "Any person making impertinent or slanderous remarks or who becomes boisterous while addressing the City Council, shall be barred from further audience before the City Council by the Mayor, unless permission to continue or again address the City Council is granted by the majority vote of the City Council members present. In accordance with the foregoing, the City Council has determined that racial or ethnic slurs, personal attacks and comments unrelated to City matters or issues constitute prohibited comments from the podium."*

CITY COUNCIL BOARD OF APPEALS MEETING AGENDA
Monday, June 30, 2025 – 6:00 PM
Council Chambers, 201 Westward Drive, Miami Springs, Florida
(In-person and virtually; See the end of the Agenda for additional information)

1. **Call to Order/Roll Call**
2. **Pledge of Allegiance:** Audience will lead the Pledge of Allegiance and Salute to the Flag.
3. **Public Comment:**
4. **Public Hearings**
   A) Appeal by Michelle Ferreira to the Board of Appeals of Resolution No. 4280 relating to 200 N. Esplanade Drive
5. **Adjourn**

CITY OF MIAMI SPRINGS
PUBLIC MEETING NOTICE

The City of Miami Springs will hold a Council meeting on:

Monday, June 30, 2025 at 6:00 PM
City Hall, Council Chambers, 201 Westward Drive, Miami Springs, Florida
(Physical Meeting Location)

The meeting agenda is available online at: https://www.miamisprings-fl.gov/meetings

Elected officials and City staff will participate from the physical meeting location. Members of the public may attend the meeting in person at the physical meeting location, or, alternatively, may watch or call in to the meeting by following these instructions:

ATTEND THE MEETING IN PERSON AT THE PHYSICAL MEETING LOCATION

The meeting will be held in person at the physical meeting location stated above. Admission to the physical meeting location is on a first-come, first-serve basis and space is limited. Doors will open 30 minutes prior to the meeting start time. The City highly encourages those in attendance to wear facial coverings and abide by social distancing as recommended by the CDC.

WATCH AND/OR PARTICIPATE IN THE MEETING

- **ZOOM: Meeting ID 863-9512-4146**
- **YouTube:** https://www.youtube.com/channel/UC2at9KNnqUxZRSw1UkhdHLQ/featured
- **From your computer/mobile device:** https://www.miamisprings-fl.gov/meetings

CALL IN TO THE PUBLIC MEETING

Dial 305-805-5151 or 305-805-5152
(Alternatively, you may also dial the phone numbers below to join the meeting: 1 (646) 558 8656, 1 (301) 715 8592, 1 (312) 626 6799, 1 (669) 900 9128, 1 (253) 215 8782, 1 (346) 248 7799) **then input the Meeting ID: 863-9512-4146, followed by #. There is no participant ID. Press # again.**

Any person requiring special accommodations to access this proceeding is asked to advise the City at least 2 days before the proceeding by contacting the City Clerk at cityclerk@miamisprings-fl.gov.

PUBLIC COMMENTS WILL BE ACCEPTED BY THE FOLLOWING MEANS:

EMAILED COMMENTS: Members of the public may email their public comments to the City in advance of the meeting. Please email the City at **cityclerk@miamisprings-fl.gov** by 12:00 p.m. on the day of the meeting with the subject line "PUBLIC COMMENT" and the following information in the body of the email: Your Name, Address, if you are a hired Consultant or City Employee, and/or if you are engaged in Lobbying Activities and/or representing an organization. Please limit your comments to no more than 350 words. Public comments received via email may be read into the record during the public comment portion of the agenda, if any.

IN-PERSON COMMENTS: Members of the public may attend the meeting at the physical meeting location stated above and deliver their public comments in person during the public comment portion of the agenda.

VIRTUAL COMMENTS: ***Public comments will also be accepted during the meeting using the virtual meeting platform as follows:***

By telephone: To ask to speak during the meeting, call in to the meeting using the instructions above. Please press *9 from your telephone and you will be called on to speak during public comments and identified by the last 4-digits of your telephone number.

During the meeting, when your name or the last 4-digits of your telephone number is called, you will be unmuted and you may deliver your comments.

Please be sure to be in a quiet area to avoid unnecessary noise. Please provide the following information before delivering your comments: Your Name, Address, if you are a hired Consultant or City Employee, and/or if you are engaged in Lobbying Activities and/or representing an organization.

A time limit may be imposed for each speaker during public comment.
Your cooperation is appreciated in observing the time limit.

Any person making impertinent or slanderous remarks or who becomes boisterous while addressing the City Council, shall be barred from further audience before the City Council by the Mayor, unless permission to continue or again address the City Council is granted by the majority vote of the City Council members present. In accordance with the foregoing, the City Council has determined that racial or ethnic slurs, personal attacks and comments unrelated to City matters or issues constitute prohibited comments when addressing the Council during public comments.

PUBLIC RECORDS

The meeting will be recorded for later viewing and is a public record. The virtual chat, if any, will be saved and is a public record. Minutes of the meeting will be taken and will be made available.

NOTICE PURSUANT TO §286.0105, FLORIDA STATUTES

IF A PERSON DECIDES TO APPEAL ANY DECISION MADE BY THE BOARD, AGENCY, OR COMMISSION WITH RESPECT TO ANY MATTER CONSIDERED AT THIS MEETING OR HEARING, HE OR SHE WILL NEED A RECORD OF THE PROCEEDINGS, AND FOR SUCH PURPOSE, HE OR SHE MAY NEED TO ENSURE THAT A VERBATIM RECORD OF THE PROCEEDINGS IS MADE, WHICH RECORD INCLUDES THE TESTIMONY AND EVIDENCE UPON WHICH THE APPEAL IS TO BE BASED.

AMERICANS WITH DISABILITIES ACT

Pursuant to the provisions of the Americans with Disabilities Act, any person requiring special accommodations to participate in this proceeding is asked to advise the City at least 2 days before the proceeding by contacting the City Clerk's Office at 305-805-5006.

LOBBYING ACTIVITIES

In accordance with Section 33-01 of the City Code, adopting Section 2-11.1(s) of the Miami-Dade County Code, any person engaging in lobbying activities, as defined therein, must register at the City Clerk's Office before addressing the City Council on the agenda items or engaging in lobbying activities. Specifically, all persons, firms or corporations employed or retained by a principal who seeks to encourage the passage, defeat, or modifications of (1) ordinance, resolution, action or decision of the City Council; (2) any action, decision, recommendation of any City Board or Committee; or (3) any action, decision or recommendation of City personnel during the time period of the entire decision-making process on such action, decision or recommendation which will be heard or reviewed by the City Council, or a City Board or Committee shall register with the City before engaging in any lobbying activities on forms prepared for this purpose and shall state under oath his or her name, business address, the name and business address of each person or entity which has employed said registrant to lobby, and the specific issue on which he or she has been employed to lobby. A copy of the lobbyist registration form is available from the Office of the City Clerk and online at: https://www.miamisprings-fl.gov/cityclerk/lobbyist-registration-form-0.

Have questions or need additional information?
Write: cityclerk@miamisprings-fl.gov
Call: 305-805-5006
Mail: 201 Westward Drive, Miami Springs, FL 33166

CITY OF MIAMI SPRINGS
PUBLIC MEETING NOTICE

The City of Miami Springs will hold a Council meeting
on:

Monday, June 30, 2025 at 6:00 PM
City Hall, Council Chambers, 201 Westward Drive, Miami Springs, Florida
(Physical Meeting Location)

The meeting agenda is available online at: https://www.miamisprings-fl.gov/meetings

Elected officials and City staff will participate from the physical meeting location. Members of the public may attend the meeting in person at the physical meeting location, or, alternatively, may watch or call in to the meeting by following these instructions:

ATTEND THE MEETING IN PERSON AT THE PHYSICAL MEETING LOCATION

The meeting will be held in person at the physical meeting location stated above. Admission to the physical meeting location is on a first-come, first-serve basis and space is limited. Doors will open 30 minutes prior to the meeting start time. The City highly encourages those in attendance to wear facial coverings and abide by social distancing as recommended by the CDC.

WATCH AND/OR PARTICIPATE IN THE MEETING

- **ZOOM: Meeting ID 863-9512-4146**
- **YouTube:** https://www.youtube.com/channel/UC2at9KNnqUxZRSw1UkhdHLQ/featured
- **From your computer/mobile device:** https://www.miamisprings-fl.gov/meetings

CALL IN TO THE PUBLIC MEETING

Dial 305-805-5151 or 305-805-5152
(Alternatively, you may also dial the phone numbers below to join the meeting:
1 (646) 558 8656, 1 (301) 715 8592, 1 (312) 626 6799, 1 (669) 900 9128, 1 (253) 215 8782,
1 (346) 248 7799) **then input the Meeting ID: 863-9512-4146, followed by #.**
There is no participant ID. Press # again.

Any person requiring special accommodations to access this proceeding is asked to advise the City at least 2 days before the proceeding by contacting the City Clerk at cityclerk@miamisprings-fl.gov.

PUBLIC COMMENTS WILL BE ACCEPTED BY THE FOLLOWING MEANS:

EMAILED COMMENTS: Members of the public may email their public comments to the City in advance of the meeting. Please email the City at **cityclerk@miamisprings-fl.gov** by 12:00 p.m. on the day of the meeting with the subject line "PUBLIC COMMENT" and the following information in the body of the email: Your Name, Address, if you are a hired Consultant or City Employee, and/or if you are engaged in Lobbying Activities and/or representing an organization. Please limit your comments to no more than 350 words. Public comments received via email may be read into the record during the public comment portion of the agenda, if any.

IN-PERSON COMMENTS: Members of the public may attend the meeting at the physical meeting

location stated above and deliver their public comments in person during the public comment portion of the agenda.

VIRTUAL COMMENTS: ***Public comments will also be accepted during the meeting using the virtual meeting platform as follows:***

By telephone: To ask to speak during the meeting, call in to the meeting using the instructions above. Please press *9 from your telephone and you will be called on to speak during public comments and identified by the last 4-digits of your telephone number.

During the meeting, when your name or the last 4-digits of your telephone number is called, you will be unmuted and you may deliver your comments.

Please be sure to be in a quiet area to avoid unnecessary noise. Please provide the following information before delivering your comments: Your Name, Address, if you are a hired Consultant or City Employee, and/or if you are engaged in Lobbying Activities and/or representing an organization.

A time limit may be imposed for each speaker during public comment.
Your cooperation is appreciated in observing the time limit.

Any person making impertinent or slanderous remarks or who becomes boisterous while addressing the City Council, shall be barred from further audience before the City Council by the Mayor, unless permission to continue or again address the City Council is granted by the majority vote of the City Council members present. In accordance with the foregoing, the City Council has determined that racial or ethnic slurs, personal attacks and comments unrelated to City matters or issues constitute prohibited comments when addressing the Council during public comments.

PUBLIC RECORDS

The meeting will be recorded for later viewing and is a public record. The virtual chat, if any, will be saved and is a public record. Minutes of the meeting will be taken and will be made available.

NOTICE PURSUANT TO §286.0105, FLORIDA STATUTES

IF A PERSON DECIDES TO APPEAL ANY DECISION MADE BY THE BOARD, AGENCY, OR COMMISSION WITH RESPECT TO ANY MATTER CONSIDERED AT THIS MEETING OR HEARING, HE OR SHE WILL NEED A RECORD OF THE PROCEEDINGS, AND FOR SUCH PURPOSE, HE OR SHE MAY NEED TO ENSURE THAT A VERBATIM RECORD OF THE PROCEEDINGS IS MADE, WHICH RECORD INCLUDES THE TESTIMONY AND EVIDENCE UPON WHICH THE APPEAL IS TO BE BASED.

AMERICANS WITH DISABILITIES ACT

Pursuant to the provisions of the Americans with Disabilities Act, any person requiring special accommodations to participate in this proceeding is asked to advise the City at least 2 days before the proceeding by contacting the City Clerk's Office at 305-805-5006.

LOBBYING ACTIVITIES

In accordance with Section 33-01 of the City Code, adopting Section 2-11.1(s) of the Miami-Dade County Code, any person engaging in lobbying activities, as defined therein, must register at the City Clerk's Office before addressing the City Council on the agenda items or engaging in lobbying

activities. Specifically, all persons, firms or corporations employed or retained by a principal who seeks to encourage the passage, defeat, or modifications of (1) ordinance, resolution, action or decision of the City Council; (2) any action, decision, recommendation of any City Board or Committee; or (3) any action, decision or recommendation of City personnel during the time period of the entire decision-making process on such action, decision or recommendation which will be heard or reviewed by the City Council, or a City Board or Committee shall register with the City before engaging in any lobbying activities on forms prepared for this purpose and shall state under oath his or her name, business address, the name and business address of each person or entity which has employed said registrant to lobby, and the specific issue on which he or she has been employed to lobby. A copy of the lobbyist registration form is available from the Office of the City Clerk and online at: https://www.miamisprings-fl.gov/cityclerk/lobbyist-registration-form-0.

Have questions or need additional information?
Write: cityclerk@miamisprings-fl.gov
Call: 305-805-5006
Mail: 201 Westward Drive, Miami Springs, FL 33166

RESOLUTION NO. 2025 - _____

A RESOLUTION OF THE MAYOR AND THE CITY COUNCIL OF THE CITY OF MIAMI SPRINGS, FLORIDA, SITTING AS THE BOARD OF APPEALS, [AFFIRMING/REVERSING] RESOLUTION NO. 2025-4280 WHICH AFFIRMED A RECOMMENDATION OF THE CITY'S BOARD OF ADJUSTMENT TO DENY AN APPEAL BY MICHELLE FERREIRA, THE OWNER OF THE REAL PROPERTY LOCATED AT 300 FALCON AVENUE, MIAMI SPRINGS, FLORIDA 33166.; PROVIDING FOR FINAL ORDER; AND PROVIDING FOR AN EFFECTIVE DATE.

WHEREAS, on November 25, 2024, Michelle Ferreira (the "Applicant/Appellant"), the owner of the real property located at 300 Falcon Avenue, Miami Springs, Florida 33166, filed an appeal to the Board of Adjustment pursuant to Section 150-111 of the City of Miami Springs (the "City") Code of Ordinances (the "Code") challenging an administrative determination relating to setbacks at a neighboring property located at 200 North Esplanade Drive, and requesting that the City revoke building permit number RES21-1143 and issue a stop work order to enjoin the improvements proposed by the owners of the North Esplanade Drive property; and

WHEREAS, Section 150-111(B)(1) of the Code provides that the Board of Adjustment has, among other duties and powers, "the ability to hear and decide appeals where it is alleged that there is an error in any order, requirement, decision, or determination made by the administrative official in the enforcement of [Chapter 150 of the Code]"; and

WHEREAS, Section 150-113(A) of the Code provides that "all decisions of the … Board of Adjustment are recommendations for action by the City Council"; and

WHEREAS, Section 150-113(B)(1)(b)(i) of the Code provides that the City Council "shall either affirm the case recommendation of the Board [of Adjustment] by motion, or any City Council member may request a further meeting to be conducted on any board recommendation before the City Council, sitting as a board of appeals"; and

WHEREAS, Section 150-113(B)(1)(b)(ii) of the Code provides that "a motion to affirm the case recommendation of the Board of Adjustment shall constitute final City Council action ... unless an Appellant ... files a written 'notice of appeal' ... with the City Clerk"; and

WHEREAS, on February 26, 2025, the City's Board of Adjustment held a duly noticed public hearing on the Applicant's appeal, considered arguments of the Applicant and the City, as well as evidence presented, including the Staff Report, and recommended that the administrative official's determination be upheld; and

WHEREAS, on April 28, 2025, the City Council considered the Board of Adjustment's recommendation and adopted Resolution No. 2025-4280 (a copy of which is attached hereto as Exhibit A and incorporated herein), which affirmed by motion the Board of Adjustment's recommendation; and

WHEREAS, on May 5, 2025, the Applicant timely filed her notice of appeal of City Resolution No. 2025-4280; and

WHEREAS, in accordance with Section 150-113(B)(1)(b)(iv) of the City Code, the City Planning Department and the Appellant provided notice of the meeting of the City Council sitting as the Board of Appeals scheduled for June 30, 2025; and

WHEREAS, on June 30, 2025, the City Council sitting as the Board of Appeals held the duly noticed public hearing; heard arguments presented by the Appellant and the City; reviewed the Board of Adjustment's recommendation and the record before the Board of Adjustment, including the Staff Report, the documents submitted into evidence at the February 26, 2025 Board of Adjustment hearing, and the transcript of that February 26, 2025 hearing; and

WHEREAS, the City Council sitting as the Board of Appeals considered whether competent substantial evidence supports the recommendation of the Board of Adjustment, as affirmed in Resolution No. 2025-4280, whether the Board of Adjustment applied the correct law, and whether the Board of Adjustment afforded procedural due process; and

WHEREAS, the City Council sitting as the Board of Appeals finds that this Resolution is in the best interest and welfare of the citizens of the City.

NOW, THEREFORE, BE IT RESOLVED BY THE MAYOR AND CITY COUNCIL OF THE CITY OF MIAMI SPRINGS, FLORIDA, AS FOLLOWS:

Section 1. Recitals. The foregoing recitals are confirmed, adopted, and incorporated herein and made a part hereof.

Section 2. Decision. That the City Council, sitting as the Board of Appeals, hereby [AFFIRMS/REVERSES] the recommendation of the Board of Adjustment, as affirmed in Resolution No. 2025-4280:

[IF AFFIRMED]

a. Findings. The record contains competent substantial evidence in support of the recommendation of the Board of Adjustment, as affirmed in Resolution No. 2025-4280; the Board of Adjustment applied the correct law; and the Board of Adjustment afforded procedural due process.

b. The administrative official's decision, providing that the location of the front yard of the Esplanade Property is on Falcon Avenue and the yard of the Esplanade Property adjacent to the Applicant's Property is a side yard, is upheld and affirmed.

[OR]

[IF REVERSED]

a. Findings. The record [does/does not] contain competent substantial evidence in support of the recommendation of the Board of Adjustment, as affirmed in Resolution No. 2024-4280; [and/or] [the Board of Adjustment

failed to apply the correct law]; [and/or] [the Board of Adjustment failed to provide procedural due process].

b. The administrative official's decision, providing that the location of the front yard of the Esplanade Property is on Falcon Avenue and the yard of the Esplanade Property adjacent to the Applicant's Property is a side yard, is reversed.

Section 3. Final Order. This Resolution constitutes a final order of the City Council sitting as the Board of Appeals. Further appeals from any final decisions of the City Council in regard to any case recommendation of the Board of Adjustment shall be maintained in accordance with the applicable appellate rules and procedures established by the laws of the State of Florida.

Section 4. Effective Date. This Resolution shall become effective immediately upon adoption.

The foregoing Resolution was offered by _____ who moved its adoption. The motion was seconded by _____ and upon being put to a vote, the vote was as follows:

Mayor Dr. Walter Fajet, Ph.D.	_____
Vice Mayor Jorge Santin	_____
Councilmember Fabian Perez-Crespo	_____
Councilmember Joseph Dion	_____
Councilmember Orlando Lamas	_____

PASSED AND ADOPTED this 30th day of June, 2025.

_____
DR. WALTER FAJET, PH.D., MAYOR

ATTEST:

_____
ERIKA GONZALEZ, MMC, CITY CLERK

This Resolution has been rendered in the Office of the City Clerk this _____ day of_____, 2025.

APPROVED AS TO FORM AND LEGAL SUFFICIENCY
FOR THE USE AND RELIANCE OF THE CITY OF MIAMI SPRINGS ONLY:

_____
WEISS SEROTA HELFMAN COLE & BIERMAN, P.L.
CITY ATTORNEY

EXHIBIT A

Copy of Resolution No. 2025-4280

City of Miami Springs
201 Westward Drive Miami Springs, FL 33166
Phone: (305) 805-5034 Fax: (305) 805-5036 Website: www.miamisprings-fl.gov

BASIC SUBMITTAL APPLICATION CHECKLIST

Mandatory Submittals – For all applications

- ☐ Complete Application Form, including all required forms and affidavits, signed by property owner or owner's representative. Forms may be downloaded from the City website or requested by emailing planning@miamisprings-fl.gov.

- ☐ Letter of Authorization from property owner, if different from Applicant.

- ☐ Letter of Intent signed by owner or owner's representative, which may include a narrative describing the project(s), whether the impact of the proposed development is favorable, adverse, or neutral on the economy, public services, environment, and housing supply of the City, and the relationship of the proposed project to surrounding, existing, and proposed Future Land Uses, and to existing zoning, and the City's Comprehensive Plan. This narrative may be provided as a document separate from the letter.
  If variances, special exceptions, appeals, and/or conditional uses are being requested, the extent of these from the requirements shall be noted in the narrative.
  If site plans are being requested, please refer to *Site Plan Application Guidelines Form*.

- ☐ Recent Property Survey prepared by a registered land surveyor that is less than one (1) year old accompanied by a written statement from the property owner that the survey accurately depicts the structures, landscaping, incidental furnishings or equipment and topographical features currently on the subject property according to Sec. 150-027.

- ☐ Engineering, Infrastructure, and Public Works requirements, if applicable.

- ☐ Two (2) full-size sets of paper plan showing the proposed development as described in the Letter of Intent.

- ☐ Digital copies of all required documents must be submitted via email or share-file service to planning@miamisprings-fl.gov.

- ☐ Application Fee and cost recovery deposit as shown in the Official Fee Schedule on the City's website.

Additional Submittals – Per Zoning Code or as determined by the Office of the City Planner or City Manager.

☐ Traffic Impact Statement (methodology/analysis), if applicable.

☐ For Temporary Plat applications. If the property owner is not an individual (e.g., LLC), an Opinion of Title must be submitted with the application.

☐ For Final Plat applications. Permanent Reference Markers (PRMs) shall be installed prior to the City Surveyor's final inspection.

Street/Alley Vacation requests associated with Plats or Site Plan approval requests may be submitted concurrently with those Plat or Site Plan approval applications. Variances associated with Site Plan approvals may be submitted together with the Site Plan application.

Applications shall be deemed incomplete until all mandatory and necessary additional submittals have been received by the City of Miami Springs Planning and Zoning Department and all fees due have been paid to the City

DEVELOPMENT APPLICATION

Instructions

Please print or type all the fields, except those for "Office Use Only." This application must be filled out accurately and completely; if an item is not applicable to your development, simply write "N/A".

Office Use Only	
Application No.	Date
	11/27/24
Escrow No.	

Property Owner – acknowledgement and contact information

Under penalties of perjury, I declare that I have read the foregoing application and all attachments to the application and that the facts stated in it are true to the best of my knowledge and belief.

Name Michelle Ferreira	Signature Michelle N. Ferreira
Email	Telephone No. 786-546-8008
Address 300 Falcon Ave	

Application Type – Check the box, or circle, all options that apply

Requested Process(es)			
	Meeting o Pre-application o Development review		Amendment(s) o Comprehensive Plan o Code o FLU Map o Zoning Map
	Site Plan review / Large-Scale Development o Project type o _____		Street of Alley Vacation or Abandonment
	Variance / Special Exception / Conditional Use (Appeal) o _____ o _____		Platting / Subdivision o Tentative Plat o Final Plat o Waiver of Plat

Project Description

Name	Jovany Jimenez + Ambar Sara Preval			
Address	200 N. Esplanade Dr			
Description	Sely 1/2 of Lots 1+2, Block 58, PB 17/2			
Folio Number(s)	05-3118-016-1590			
Site Area	**Sq. Ft.**	100'x 75'	**Acres**	
Existing Use	**Existing**	R-1C	**Proposed**	
Residential Use	**Sq. Ft.**	7,500	**# units**	
Nonresidential Use (Sq. Ft.)	**Office**		**Retail**	
	Restaurant		**Other**	

Team Members, if applicable – contact information

Agent / Planner / Architect / Landscape Architect / Engineer / Land Use Attorney / Surveyor	
Name Kristofer Machado, Esq.	Company Akerman LLP
Telephone No. 305-982-5658	Email kristofer.machado@akerman.com
Agent / Planner / Architect / Landscape Architect / Engineer / Land Use Attorney / Surveyor	
Name	Company
Telephone No.	Email
Agent / Planner / Architect / Landscape Architect / Engineer / Land Use Attorney / Surveyor	
Name	Company
Telephone No.	Email

☐ Check here if additional team members are involved. Please attach contact information for the remaining team members as a separate sheet.

AGENT AUTHORIZATION FORM

Development Address	N/A
Folio Number(s)	
Property Owner	

The undersigned, registered property owner(s) of the subject site, do hereby authorize

_____, of _____

Agent — Name of Company / Firm

to act on my behalf and take all actions necessary for the processing, issuance, and acceptance of this application and all standard and special conditions associated.

Agent Address	N/A
Telephone No.	
Mobile	
Email	

We hereby certify the above information submitted in this application is true and accurate to the best of our knowledge.

Michelle N. Ferreira
Owner signature

_____
Agent signature

THE FOREGOING INSTRUMENT WAS ACKNOWLEDGED before me, by means of ☑ physical presence or ☐ online notarization, this 24 day of November, 2024, by Michelle N. Ferreira, the owner, who is ☑ personally known or ☐ produced the following identification _____ and by _____, if multiple, who is ☐ personally known or ☐ has produced the following identification _____.

Notary Public - Signature

Jacqueline Herrera
Notary Public – Printed Name

Stamp

JACQUELINE HERRERA
Notary Public-State of Florida
Commission # HH 275975
My Commission Expires
June 14, 2026

APPLICANT'S AFFIDAVIT FORM

The Undersigned, first being duly sworn depose that all answers to the questions in this application, and all supplementary documents made a part of the application are honest and true to the best of my(our) knowledge and belief. I(We) understand this application must be complete and accurate before the application can be submitted and the hearing advertised.

OWNER OR TENANT AFFIDAVIT

I(We), Michelle Ferreira, being first duly sworn, depose and say that I am (We are) the ☑ Owner ☐ Tenant of the adjacent property described, and which is the subject matter of the proposed project and any related public hearing.

Michelle N Ferreira
Owner/Tenant signature

Owner/Tenant signature

THE FOREGOING INSTRUMENT WAS ACKNOWLEDGED before me, by means of ☑ physical presence or ☐ online notarization, this 24 day of November, 2024, by Michelle N. Ferreira, the owner, who is ☑ personally known or ☐ produced the following identification _____ and by _____, if multiple, who is ☐ personally known or ☐ has produced the following identification _____.

Notary Public - Signature

Jacqueline Herrera
Notary Public – Printed Name

JACQUELINE HERRERA
Notary Public-State of Florida
Commission # HH 275975
My Commission Expires
June 14, 2026

CORPORATION, TRUSTEE, PARTNERSHIP, LIMITED PARTNERSHIP AFFIDAVIT

I(We), N/A, being first duly sworn, depose and say that I am (We are) the ☐ President ☐ Vice-President ☐ Secretary ☐ Asst. Secretary of the aforesaid ☐ Corporation ☐ Trustee ☐ Partnership ☐ Limited Partnership, and as such, have been authorized by the corporation to file this application for public hearing; and that said corporation is the ☐ Owner ☐ Tenant of the property described herein and which is the subject matter of the proposed hearing.

NOTE: where the principal officers or stockholders consists of another Corporation(s), Trustee(s), Partnership(s), or similar entities, further disclosure shall be required to identity of the natural person(s) having the ultimate ownership interest in said entity.

Corporate Seal

_____
Name of Entity

By _____ _____ %

By _____ _____ %

By _____ _____ %

By _____ _____ %

_____
Signature

Page 1/2

THE FOREGOING INSTRUMENT WAS ACKNOWLEDGED before me, by means of ☐ physical presence or ☐ online notarization, this _____ day of _____, 20_____, by _____, the owner, who is ☐ personally known or ☐ produced the following identification _____ and by _____, if multiple, who is ☐ personally known or ☐ has produced the following identification _____.

_____ Notary Public - Signature

_____ Notary Public – Printed Name

Stamp

N/A

ATTORNEY AFFIDAVIT

I, Kristofer D. Machado, being first duly sworn, depose and say that I am a State of Florida Attorney at Law, and I am the Attorney for the ☒ Owner ☐ Tenant of the property described, and which is the subject matter of the proposed hearing.

Signature

THE FOREGOING INSTRUMENT WAS ACKNOWLEDGED before me, by means of ☒ physical presence or ☐ online notarization, this 21 day of November, 2024, by KRISTOFER machado, the owner, who is ☐ personally known or ☒ produced the following identification FLDL.

Notary Public - Signature

Madison Morales
Notary Public – Printed Name

Notary Public State of Florida
Madison Marie Morales
My Commission HH 472602
Expires 12/13/2027

COST RECOVERY AFFIDAVIT

I hereby acknowledge and consent to the payment of all applicable fees involved as part of this application process. These fees include but are not limited to application fees, postage, advertising. Attorney fees and any outside contractors, agents, or consultant regardless of the outcome of the public hearing.

Date 11/1/24

Full name Michelle Ferreira

Street address 300 Falcon Ave City Miami Springs

State FL Zip 33166

Telephone 786-546-8008

Email michelle.ferreira@akerman.com

Michelle N. Ferreira
Signature

THE FOREGOING INSTRUMENT WAS ACKNOWLEDGED before me, by means of ☑ physical presence or ☐ online notarization, this 24 day of November, 2024, by Michelle N. Ferreira, the owner, who is ☑ personally known or ☐ produced the following identification _____.

Notary Public - Signature

Jacqueline Herrera
Notary Public – Printed Name

JACQUELINE HERRERA
Notary Public-State of Florida
Commission # HH 275975
My Commission Expires
June 14, 2026

akerman

Kristofer D. Machado

Akerman LLP
Three Brickell City Centre
98 Southeast Seventh Street
Suite 1100
Miami, FL 33131

T: 305 374 5600

November 25, 2024

VIA HAND DELIVERY AND EMAIL

Erika Gonzalez-Santamaria, MMC
City Clerk
City of Miami Springs
201 Westward Drive
Miami Springs, Florida 33166
gonzaleze@miamisprings-fl.gov

Silvia Vargas, FAICP, LEED AP
City Planner
City of Miami Springs
Zoning and Planning Department
201 Westward Drive
Miami Springs, Florida 33166
SVargas@cgasolutions.com
planning@miamisprings-fl.gov

Re: Appeal of Erroneous Administrative Determination
200 N. Esplanade Drive / Folio No. 05-3118-016-1590 (the "Esplanade Property")

Mmes. Gonzalez-Santamaria and Vargas:

This law firm represents Michelle Ferreira, the owner of 300 Falcon Avenue, Miami Springs, FL 33166 ("**Falcon Property**"). This is an appeal, pursuant to Section 150-111 of the Miami Springs ("**City**") Code of Ordinances ("**Code**"), challenging an erroneous administrative determination regarding the setbacks applicable to an illegal addition being constructed at the Esplanade Property, immediately adjacent to Ms. Ferreira's property.

For the reasons explained, the addition being constructed at the Esplanade Property is unlawful because it does not provide a conforming 25-foot rear yard setback as required by the waiver of plat for the Esplanade Property and Section 150-043 of the Code. Accordingly, the City must revoke building permit number RES21-1143 ("**Building Permit**"), which was issued on or about May 18, 2022, without notice to Ms. Ferreira as to either the permit or the erroneous administrative setback determination that disregards the waiver of plat condition, and must issue a stop-work order enjoining the unlawful improvements.

PROPERTY BACKGROUND

The Esplanade Property is improved with a single-family residence that faces Esplanade Drive (the "**Esplanade House**"). The Esplanade House was built in 1947 across two platted lots, legally described as:

Lots 1 and 2, Block 58, of CINEMA PARK ADDITION TO COUNTRY CLUB ESTATES, according to the Plat thereof, as recorded in Plat Book 17, Page 2, of the Public Records of Miami-Dade County, Florida.

As shown on the recorded subdivision plat, Lot 1 was a corner lot and Lot 2 was an interior lot. Each lot measured 50' x 150' with the Esplanade Property and the Falcon Property comprising a single building site measuring 100' x 150' (collectively, the "**Building Site**"). The Esplanade House was constructed on the portion of the Building Site that would become the Esplanade Property following the 1984 Waiver of Plat Approval described below. The remainder of the Building Site, which would become the Falcon Property, was then vacant land.

The Esplanade House is located in the R-1C district ("**R-1C**"). At the time the Esplanade House was constructed, it complied with the provisions of the Code, including the setbacks for the R-1C district (**Exhibit 1** attached hereto).





REQUIRED SETBACKS		
	Required	Provided
Front (Esplanade Drive)	30'	35.26'
Rear	25'	25.14'
Side	10' (10%)	13.86'
Side – street (Falcon Ave)	15'	15.09'

WAIVER OF PLAT AND BINDING SETBACK DETERMINATION

In 1983-84, the then-owner of the Building Site filed an application seeking the City's approval to subdivide the Building Site into two 75' x 100' lots (i.e. the Esplanade Property and the Falcon Property).

The City approved the subdivision in 1984 through a waiver of plat.[1] The City conditioned that subdivision approval on the owner satisfying several requirements, as outlined in a letter from the City Building Official dated June 20, 1984 (**Exhibit 2** attached hereto) (the "**1984 Waiver of Plat Approval**"), most notably the following:

1. The Esplanade House must be located on a 75' x 100' lot.
2. The Esplanade House must comply with all setback requirements of the R-1C district.
3. The Esplanade House must provide the following minimum setbacks: front yard setback of 30'; rear yard setback of 25'; 15' setback on the side of the house facing Falcon Avenue, and a 10' setback on the south side of the house.

[1] The City did not have a Code-prescribed waiver of plat process in 1984. The current waiver of plat process was not codified until 1989. However, this appeal does not challenge the 1984 Waiver of Plat Approval.

Importantly, as part of the 1984 Waiver of Plat Approval, the Building Official determined that the yard between the Esplanade House and the Falcon Property was a **rear** yard, requiring a 25' **rear** yard setback. This is evident from condition (3) above that "side" yard setbacks were required along the Esplanade House's south property line and the property line facing Falcon Avenue. Condition (3) of the 1984 Waiver of Plat Approval thus made clear that the yard along Esplanade Drive was the front yard and the yard facing the Falcon Property was the rear yard.[2] The Building Official's determination was fully consistent with the physical orientation of the Esplanade House — at all times since its construction in 1947, the front of the Esplanade House has faced Esplanade Drive and the rear has faced the Falcon Property.

Moreover, the Building Official also reiterated in the 1984 Waiver of Plat Approval that no building permit for the Falcon Property could be issued until all encroachments on the Esplanade Property into the required setbacks had been removed. At the time, the Esplanade Property was improved with the Esplanade House and an accessory structure located in the rear yard of the Esplanade Property, near the property line that divides the Esplanade Property from the Falcon Property. Thus, to ensure that the Esplanade Property provided a fully conforming **rear** yard setback of 25 feet between the existing residence and the Falcon Property, the Building Official required that the accessory structure be demolished.

The City Building Official advised the owner that if it wanted to retain the accessory structure, the owner would have to appeal to the Board of Adjustment:

> Since the structures seem only to be of an accessory value, please remove them to a line that will yield 10% on side and 25' in the rear, as a description for setbacks.
>
> Field corrected surveys will be acceptable, if initialed by the engineer. "Saving" part of the utility room would be a matter for reference to the Board of Adjustment.

The owner did not appeal to the Board of Adjustment. Instead, the owner accepted the Building Official's determination and proceeded to demolish the accessory structure to provide a conforming 25-foot rear yard setback (**Exhibit 3** attached hereto):

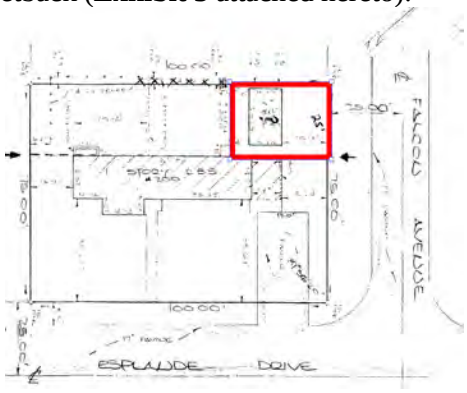



[2] Section 150-002(18) of the Code provides that "[f]or corner lots, the lot front shall be the narrowest portion abutting the street, unless determined otherwise by the planning and zoning director." In the 1984 Waiver of Plat Approval, the Building Official determined that the front of the Esplanade Property is the portion abutting Esplanade Drive. Further, Section 150-002(85) provides that "[t]he rear yard shall be that portion of the lot that is opposite and most distant from the front yard." Therefore, when the Building Official determined as part of the 1984 waiver of plat that the Esplanade Drive frontage was the "front" of the Esplanade Property, he necessarily determined that the yard nearest the Falcon Property is the "rear" yard, because that yard is "opposite and most distant from the front yard."

Once the accessory structure was demolished, the Esplanade Property achieved the following setbacks, which complied with the R-1C requirements:

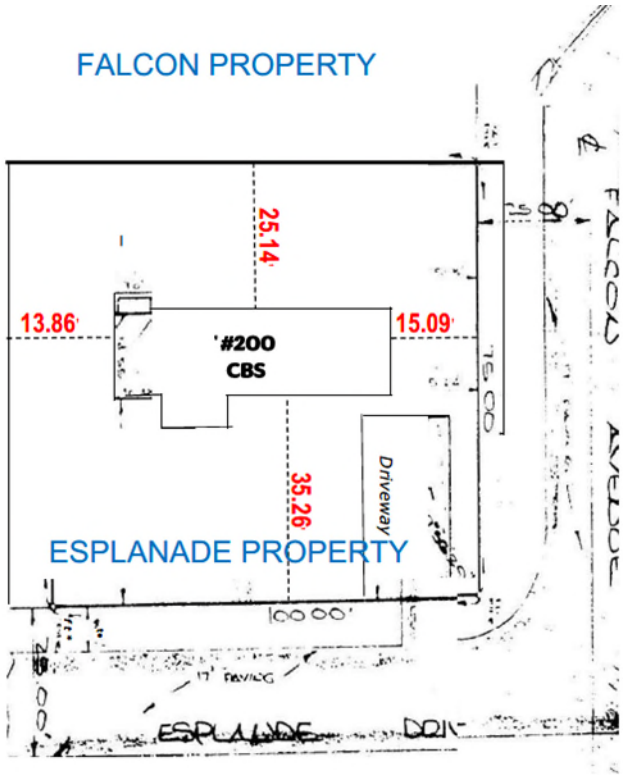

SETBACKS SATISFIED FOR WAIVER OF PLAT		
	Required	Provided
Front (N Esplanade Drive)	30’	35.26’
Rear (Side of Falcon Property)	25’	25.14’
Side (Adj. to Lot 3)	10’ (10%)	13.86’
Side – street (Falcon Ave)	15’	15.09’

After all the conditions to the 1984 Waiver of Plat Approval had been met, the City issued a building permit in 1985 for the construction of a new residence on the Falcon Property.

ILLEGAL ESPLANADE PROPERTY ADDITION

Our review of public records reveals the following facts. In August 2021, the Esplanade Property was sold to the current owners, Jovany Jimenez and Ambar Sara Preval (together, “**Esplanade Owner**”). On December 21, 2021, the Esplanade Owner submitted an application for a building permit for the construction of a new addition at the rear of the Esplanade House and overall remodeling of the existing structure. As required by the City, the Esplanade Owner completed and filed with the City a project data form with a side-by-side table comparing the required setbacks and area calculations to those that would be provided after the addition was constructed.

In completing the data form, the Esplanade Owner erroneously calculated the setbacks as if the Esplanade House fronted Falcon Avenue instead of Esplanade Drive, alleging that the yard between the Esplanade Property and the Falcon Property was a “side” yard. But, in light of the 1984 Waiver of Plat Approval, the Esplanade Owner knew or should have known that it is a **rear** yard, requiring a **25**-foot setback. In fact, in various documents submitted with the permit application, the Esplanade Owner admitted that the proposed alterations and improvements would occur in the “rear” of the Esplanade House, facing the Falcon Property (**Exhibit 4** attached hereto).

The Esplanade Owner also erroneously asserted that the Esplanade Property contained non-conforming front yard and rear yard setbacks that were "exist[ing] condition approved" and that the proposed addition's minimal setbacks were thus "approved to match exist[ing] condition." The Esplanade Owner did not have any basis to conclude (and the City did not have any basis to accept) that the Esplanade Property's front and rear setbacks were non-conforming, nor did the Esplanade Owner have any basis to represent to the City that the yard between the Esplanade Property and the Falcon Property was a "side" yard. Indeed, the 1984 Waiver of Plat Approval determined to the contrary. The Code provisions establishing the minimum setbacks for the R-1C district are the same today as they were in 1947 when the Esplanade House was built and were also the same in 1984 when the waiver of plat was approved.

When the Esplanade Owner purchased the Esplanade Property, it acquired the property subject to the requirements of the 1984 Waiver of Plat Approval, including the obligation to provide and maintain a conforming rear yard setback of 25 feet between the rear of the Esplanade Residence and the Falcon Property. The Esplanade Owner was on constructive notice of those requirements, which are referenced in the deed to the Falcon Property and are readily available in the City's files. Of course, the properties' legal descriptions make obvious that the lots have been subdivided from a larger tract. That alone should have prompted the Esplanade Owner to review the City's files and other public records to become informed of the applicable restrictions. *See Palm Beach Polo, Inc. v. Village of Wellington*, 918 So. 2d 988, 992-93 (Fla. 4th DCA 2006) ("[a]n owner is legally obligated to examine the public records of the zoning authority and is on constructive notice of the ordinances, resolutions, and filed plans and restrictions governing a parcel of property.").

The Esplanade Owner's project data form should have reflected the following setbacks, consistent with the requirements of the 1984 waiver of plat:

Required		ESPLANADE PERMIT APPLICATION	Required		CORRECT DATA
Front (Falcon)	30'	15.09'	Front (Esplanade)	30'	35.26'
Rear	25'	13.86'	Rear	25'	25.14'
Side	7.5' (10%)	7.67'	Side	10' (10%)	13.86'
Side (Street)	15'	35.36'	Side (Street - Falcon)	15'	15.09'

Despite the City's own records, the City issued the Building Permit in reliance on the Esplanade Owner's erroneous assertions as to the yard orientations. As a result, the addition under construction on the Esplanade Property provides only 7.6 feet of separation from the Falcon Property and encroaches into the required rear yard setback by 17.4 feet. And Ms. Ferreira received no notice of the City's erroneous setback determination.

INVALID BUILDING PERMIT MUST BE REVOKED

The Building Permit for the proposed addition is invalid because the proposed addition does not conform to the 25-foot rear yard setback required by the waiver of plat and Section 150-043 of the Code. Further, in issuing the Building Permit, City staff disregarded Section 151-08 of the Code, which requires that "[b]efore any permit is issued, all provisions of Chapter 150, Zoning Code, and any amendments thereto shall be complied with, and the provisions of the building code shall not be construed to repeal, supersede, or modify any part of Chapter 150, or amendments thereto."

The facts here are squarely analogous to those in *Metropolitan Dade County v. Fontainebleau Gas & Wash*, 570 So. 2d 1006, 1008 (Fla. 3d DCA 1990). In *Fontainebleau*, a property owner had nearly

finished constructing a gas station on its property when the county realized that the building permit was issued in violation of a zoning obligation that had been imposed 15 years earlier, requiring the property to be used only for a bank or savings and loan. The restriction was contained in a resolution approving a rezoning of the property, which referenced a zoning covenant in the county's files that had not ultimately been recorded against the property. Because the restriction was contained in a resolution that was maintained in the public records, albeit not recorded in the official records book, the court enforced the restriction against the owners. The court held that "[s]uch a restriction on the property's use which was made in the public interest became binding on the property," and "since the property owners were bound by law to be on notice of the [county's land use records], they cannot claim detrimental reliance on the permit inadvertently issued by the county." *Id.* at 1007-08. Ultimately, the *Fontainebleau* court concluded that the existence of the zoning resolution in the county's files "demonstrates on its face that construction of a gas station would be illegal[.]" *Id.* at 1007. So too here: the further subdivision of a previously platted lot as described in the Esplanade Owner's deed put the Owner on constructive notice to look for a regulatory approval to subdivide that lot and any conditions attendant thereto; the Building Official's 1984 Waiver of Plat Approval is readily available in the City's files; and that approval plainly demonstrates that the Esplanade Owner's addition violates the R-1C rear yard setback requirements.

Moreover, the Building Official's 1984 determination is protected by the doctrine of administrative *res judicata* or administrative finality. *See Metro. Dade Cnty. Bd. of Cnty. Com'rs v. Rockmatt Corp.*, 231 So. 2d 41, 44 (Fla. 3d DCA 1970). The doctrine of administrative finality requires that longstanding zoning determinations be honored and enforced. As articulated by the *Rockmatt* court, "[t]he doctrine is applicable to rulings or decisions of administrative bodies . . . dealing with zoning regulations unless it can be shown that since the earlier ruling thereon there has been a substantial change of circumstances relating to the subject matter with which the ruling was concerned, sufficient to prompt a different or contrary determination[.]" As applicable here, the Building Official conditioned the waiver of plat on there being a full 25-foot rear yard setback between the Esplanade Property and the Falcon Property, a requirement that remains in effect today in the R-1C district. Rather than appeal the Building Official's determination or seek other relief from the Board of Adjustment, the Esplanade Owner's predecessor accepted and assented to the Building Official's determination, and so the determination became final and binding on the owner and its successors, as in *Fontainebleau*. Further, there has not been any change of circumstances, much less a "substantial change of circumstances," that would permit the City to overturn the Building Official's determination: the Esplanade House exists today in the same physical configuration and orientation as it did when it was constructed in 1947 and when the City approved the waiver of plat in 1984, and the applicable rear setback is exactly the same, 25 feet. That new officials with a different view of things might be in charge of zoning matters at the City today is a wholly insufficient basis on which to overturn the 1984 Waiver of Plat Approval condition. *Cf. Sakolsky v. City of Coral Gables*, 151 So. 2d 433, 435 (Fla. 1963) (the potential for turnover and change in city government personnel does not justify "instability in municipal action").

Even if the doctrine of administrative finality did not apply to these facts, current City staff members still would be powerless to modify the conditions of the 1984 Waiver of Plat Approval. The current Code vests the City Council —and the City Council alone — with the power and authority to approve modifications to plats and waivers of plat. *See* Code Section 150-020 (vesting the City Council with the exclusive power to decide whether to approve or deny any plat modifications and waivers of plat). And any such approval would have to be done through a duly noticed, quasi-judicial public hearing. *See Broward Cnty. v. G.B.V. Intern., Ltd.*, 787 So. 2d 838, 845 (Fla. 2001) (holding that plat approval was a quasi-judicial decision).

Because the Building Permit as issued violates the conditions of the 1984 Waiver of Plat Approval, the City must revoke it, issue a stop-work order enjoining the unlawful improvements, and require the Esplanade Owner to provide a conforming 25-foot rear yard setback between the Esplanade Property and the Falcon Property.

REQUEST FOR HEARING

Please schedule this appeal for hearing before the Board of Adjustment at the next available meeting date. We look forward to presenting testimony and other evidence to the Board of Adjustment in support of these and other arguments for why the Building Permit is invalid and must be revoked.

Thank you.

AKERMAN LLP



Kristofer D. Machado

Enclosures

cc (via email): J.C. Jimenez, City Manager (jimenezjc@miamisprings-fl.gov)
Haydee S. Sera, Esq., City Attorney (hsera@wsh-law.com)
Michelle Ferreira, Esq. (michelle.ferreira@akerman.com)

Exhibit 1

1983 JUL 14 PM 1:50 83R187750

WARRANTY DEED
INDIVID. TO INDIVID

OFF REC 11846 PG 1826

RAMCO FORM 01

This Warranty Deed *Made the* 11th *day of* July *A. D. 19* 83 *by*

THOMAS WAYNE JACKSON and PATRICE BUSSEY JACKSON, his wife

hereinafter called the grantor, to THOMAS W. JACKSON

whose postoffice address is 200 N. Esplanade Drive
hereinafter called the grantee: Miami Springs, Florida

(Wherever used herein the terms "grantor" and "grantee" include all the parties to this instrument and the heirs, legal representatives and assigns of individuals, and the successors and assigns of corporations)

Witnesseth: *That the grantor, for and in consideration of the sum of* $ 10.00 *and other valuable considerations, receipt whereof is hereby acknowledged, hereby grants, bargains, sells, aliens, remises, releases, conveys and confirms unto the grantee, all that certain land situate in* County, Florida, *viz:*

Lots 1 and 2, in Block 58, of CINEMA PARK ADDITION TO COUNTRY CLUB ESTATES, according to the Plat thereof, recorded in Plat Book 17, at Page 2, of the Public Records of Dade County, Florida.

Together *with all the tenements, hereditaments and appurtenances thereto belonging or in anywise appertaining.*

To Have and to Hold, *the same in fee simple forever.*

And *the grantor hereby covenants with said grantee that the grantor is lawfully seized of said land in fee simple; that the grantor has good right and lawful authority to sell and convey said land; that the grantor hereby fully warrants the title to said land and will defend the same against the lawful claims of all persons whomsoever; and that said land is free of all encumbrances, except taxes accruing subsequent to December 31,* 19 82

In Witness Whereof, *the said grantor has signed and sealed these presents the day and year first above written.*

Signed, sealed and delivered in our presence:

Elaine Walters

Patrice Bussey Jackson (L.S.)
PATRICE BUSSEY JACKSON

Thomas Wayne Jackson (L.S.)
THOMAS WAYNE JACKSON

STATE OF FLORIDA
COUNTY OF DADE

I HEREBY CERTIFY that on this day, before me, an officer duly authorized in the State aforesaid and in the County aforesaid to take acknowledgments, personally appeared

THOMAS WAYNE JACKSON and PATRICE BUSSEY JACKSON

to me known to be the persons described in and who executed the foregoing instrument and who acknowledged before me that they executed the same.

WITNESS my hand and official seal in the County and State last aforesaid this 11th day of July A. D. 19 83.

NOTARY PUBLIC STATE OF FLORIDA AT LARGE
MY COMMISSION EXPIRES AUG 20 1984
BONDED THRU GENERAL INS. UNDR.

NOTARY PUBLIC, State of Florida at Large

This Instrument prepared by ROBERT J. SCREMIN, P.A.
Address 3471 E. 26 Street
Miami, Florida 33137

SPACE BELOW FOR RECORDERS USE

$ 87.75 Documentary Stamps Collected
Dade County
Richard P. Brinker
Clerk, Circuit & County Courts
By F. Stewart 7/14/83 DC

RECORDED IN OFFICIAL RECORDS BOOK OF DADE COUNTY, FLORIDA.
RECORD VERIFIED
RICHARD P. BRINKER
CLERK CIRCUIT COURT



PHYSICAL SURVEY

OF

lots 1 & 2 Block 58, Cinema Park Addition to Country Club Estates, recorded in Plat Book 17 Page 2, Public Records of Dade County Florida.

THIS IS TO CERTIFY THAT WE SURVEYED THE PROPERTY SHOWN ON THE PLAT AND THAT THE TITLE LINES AND THE WALLS OF THE BUILDING ARE AS SHOWN HEREON AND STAND WITHIN THE TITLE LINES AND THAT THERE ARE NO ENCROACHMENTS UPON THE PROPERTY.

SIGNED W. J. Knox

W. J. KNOX
LICENSED CIVIL ENGINEER NO. 713
REG. LAND SURVEYOR NO. 104

SCALE SHOWN

Exhibit 2

BUILDING AND ZONING DEPARTMENT
201 WESTWARD DRIVE
MIAMI SPRINGS, FL 33166

TELEPHONE
(305) 885-4581

20 June 1984

Mr. Thomas W. Jackson
200 N. Esplanade Drive
Miami Springs, FL 33166

Dear Mr. Jackson:

In compliance with your request, this letter is to advise you of the City's requirements should the owner of the 100' x 150' lot located at 200 Esplanade Drive wish to subdivide the lot into two 75'x100' lots.

1. First, the owner of the subject property should submit a letter to this department requesting the City's approval to subdivide the lot into two 75' x 100' parcels. If the owner intends to apply for a building permit for the subdivided property, the letter should state this intention.

2. Along with the letter, there should be a copy of a current survey showing the location of all improvements on the property. The improvements should be restricted to a 75' x 100' portion of the overall platted lot of record and must not encroach upon the 75' x 100' portion for which the owner intends to apply for a building permit. Furthermore, the existing improvements must comply with all setback requirements. In this case, the house which is presently situated on the lot and facing 200 N. Esplanade Drive must:

a) Be located on a 75' x 100' lot.

b) Have minimum setbacks: front yard setback of 30'; rear yard setback of 25'; 15' setback on the side of the house facing Falcon Avenue, and a 10' setback on the south side of the house.

No building permit can be issued for the remaining 75' x 100' portion of the platted lot until all encroachments into the above described setback areas have been removed.

3. The owner should provide a survey showing the proposed locations of water, sewer, electric, telephone, gas and television cable. The ap-

To: Thomas W. Jackson

Re: 200 N. Esplanade Drive

propriate utility agencies must approve the locations and relocations of all utilities.

4. A "Waiver of Plat" must be prepared for the City Manager's signature.

5. The owner must pay the cost of extending sewer lateral to the property line.

6. The owner must also pay the cost of a sewer assessment which is required by Chapter 50, Section 50.20 of the City Code. This section is attached hereto for your reference.

Yours truly,

Dave Wells
Building Official

DW/jd
Attch.

cc: City Manager

Exhibit 3

City of
MIAMI SPRINGS
Florida

BUILDING AND ZONING DEPARTMENT
201 WESTWARD DRIVE
MIAMI SPRINGS, FL 33166

TELEPHONE
(305) 885-4581

13 September 1983

Mr. Irving Zahn
Irv Zahn, Inc.
78 Canal Street
Miami Springs, FL 33166

Mr. Thomas W. Jackson
200 N. Esplanade Drive
Miami Springs, FL 33166

Re: 200 Esplanade Dr./300 Falcon Ave.

Gentlemen:

The division of land in order to build new homesites is in keeping with municipal growth and rising values. Congratulations.

Two surveys of at least 75' x 100' can be accepted and approved if no permanent construction violates a clear separation of the lots, and/or creates a nonconforming improvement situation.

Since the structures seem only to be of an accessory value, please remove them to a line that will yield 10% on side and 25' in the rear, as a description for setbacks.

Field corrected surveys will be acceptable, if initialed by the engineer. "Saving" part of the utility room would be a matter for reference to the Board of Adjustment.

If you require further clarification of this program, please do not hesitate to call.

Yours truly,

Dave Wells

Dave Wells
Building Official
City of Miami Springs

DW/jd

J.H. MANUCY, INC.

PROFESSIONAL LAND SURVEYORS

[illegible] • [illegible] • [illegible] BROWARD [illegible]

I HEREBY CERTIFY THAT THIS PLAT OF SURVEY WAS PREPARED UNDER MY DIRECTION; THAT IT MEETS THE MINIMUM TECHNICAL STANDARDS FOR LAND SURVEYING IN THE STATE OF FLORIDA (CHAPTER 21HH-6 FLORIDA ADMINISTRATIVE CODE) FOR THE TYPE OF SURVEY SHOWN HEREON AND IS TRUE AND CORRECT TO THE BEST OF MY KNOWLEDGE AND BELIEF

J.H. Manucy, Professional Land Surveyor #1128
John F. Pierce, Professional Land Surveyor #2691

State of Florida Date September 1, 1983

BOUNDARY SURVEY

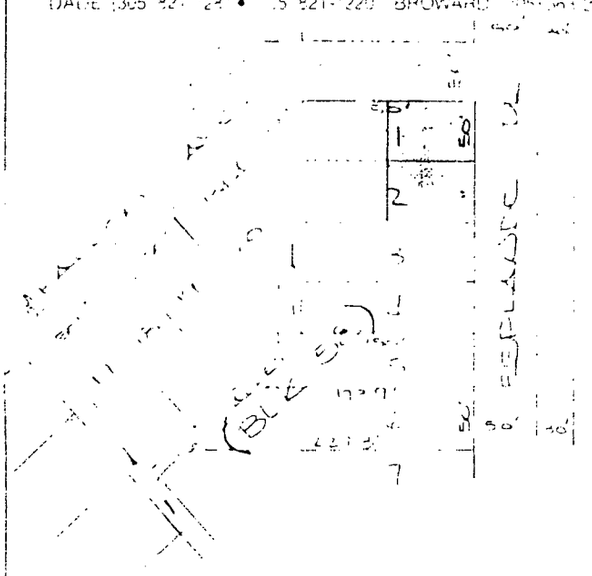

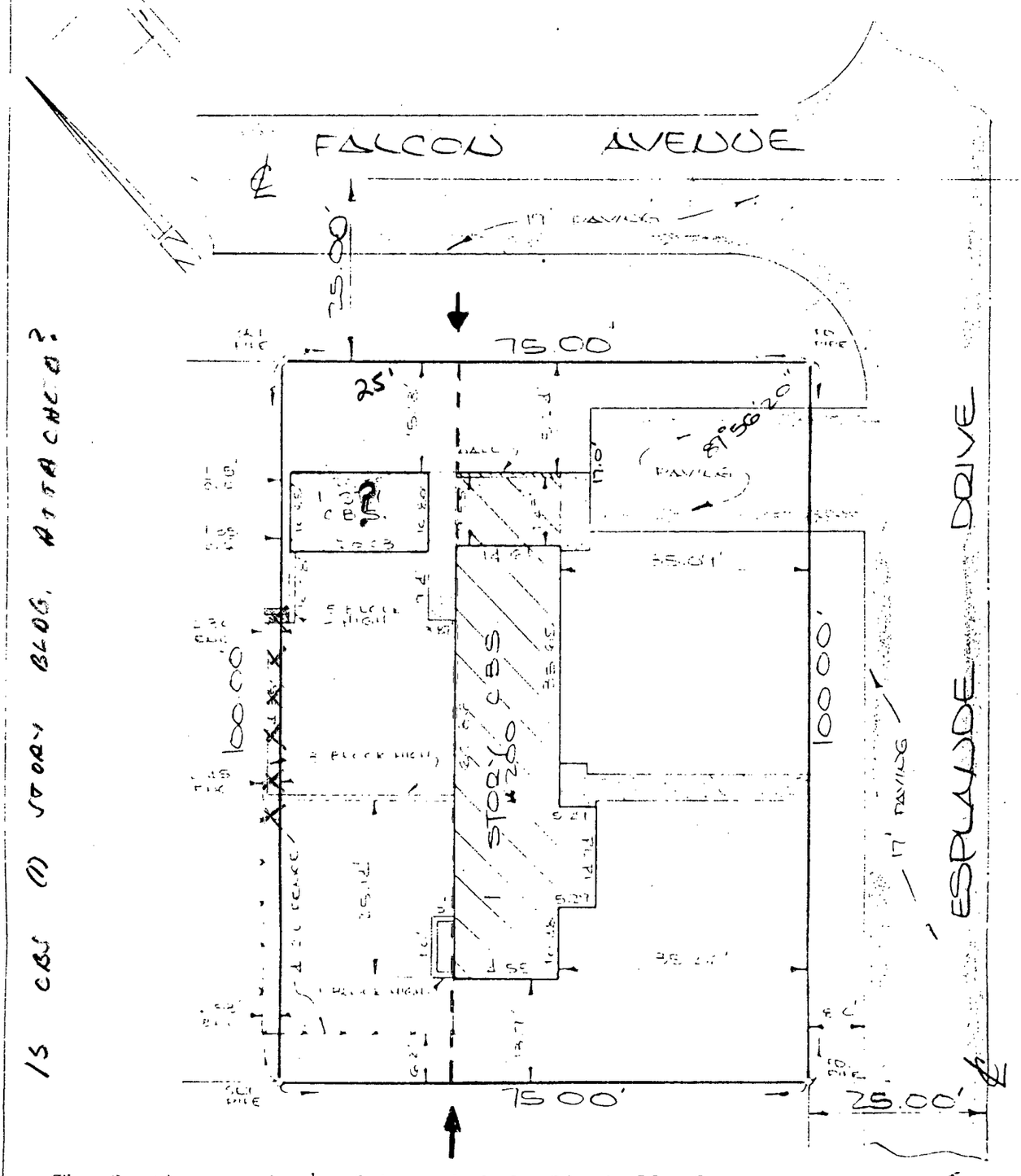

The Southeasterly ½ of Lots 1 & 2, Block 58 of CINEMA PARK ADDITION TO COUNTRY CLUB ESTATES according to the Plat thereof as recorded in Plat Book 17 at Page 2 of the Public Records of Dade County, Florida.

FOR Thomas W. Jackson DATE August 31, 1983

SCALE 1" = 20' ORDER No. 27237 F.B. A152-49 REV.

REV.

CITY OF MIAMI SPRINGS, FLORIDA

BUILDING PERMIT APPLICATION

HOMEOWNER

3118-16-159

DATE 9/7/84 (8/28/84) Tele # 888-8404 Permit No. B-415 ✓

Demo.

(This application must be submitted by two (2) sets of plans and specifications)

Application is hereby made for approval of the detailed statement of plans for the building, or other structure, herein described. The Applicant hereby agrees that all provisions of the Laws of the State of Florida and all Ordinances of the City of Miami Springs, Florida, will be complied with.

Owner's Name & Address FAY ZADA (JACKSON)

Street & Number where work is to be done 200 ESPLANADE

Architect NO

Name & Address of Contractor/Builder NO

Location & Legal Description of lot to be built on:

Lot 1 & 2 Block 58 Subdivision Cinema Pk

Purpose of Building: House ____ Multi Family ____ Commercial ____ No. of Stories ____

New Building ____ Remodeling ____ Addition ____ Repairs ____

To be constructed of: Kind of Foundation ____ Roof Covering ____

Distance to next nearest building ____ Size of building lot ____

I HEREBY SWEAR OR AFFIRM, THAT THE FACTS STATED HEREON ARE TRUE.

LICENSE(S) NO. ____

The City follows Section 304.5.6.7 of the SOUTH FLORIDA BUILDING CODE. 1,000

X ____
Signature of Applicant

FAILURE TO COMPLY WITH MECHANICS LIEN LAW CAN RESULT IN THE PROPERTY OWNER PAYING TWICE FOR BUILDING PERMITS.

SURVEY ATTACHED.

DO NOT USE THIS SPACE

Floor Area sq. ft.	0
Est. cost sq. ft.	
Est. Total cost	
Bldg. Permit fee	
Bond	
Total	20.00

Approved: ____ Building Inspector

Approved: ____ Plumbing Inspector

Approved: ____ Electrical Inspector

ALL PERMITS MUST BE PICKED UP IN PERSON.

This space represents the lot, indicate the building in space showing the distance from lot lines and other buildings, etc.

"partial" DEMOLITION OF ACCESSORY BLDG. and REAR YARD STRUCTURES TO PROVIDE SETBACKS.

(Orig.) White — OFFICE
(Dupl.) Canary — AUDITOR'S COPY
(Tripl.) Pink — CONTRACTOR'S COPY

MIN. FEE: $20.00

AFFIDAVIT

Date _____

City of Miami Springs
Building and Zoning Department
201 Westward Drive
Miami Springs, Florida 33166

In making application for a Building Permit for constructing a building, remodeling, making repairs, or adding an addition at this address: Demo.: accessory Bldg.

which is zoned: _____

I agree that this structure will be used in accordance with the Zoning classification.

/ss/ _____
PROPERTY OWNER

SWORN TO AND SUBSCRIBED BEFORE ME,

This 6th day of Sept., 1984.

_____
Notary Public State of Florida

My Commission expires:

Reference: Miami Springs Code of Ordinances:
#184 of 2-8-1954 and
#224 of 5-26-1958.

NOTE: SEE DOCUMENTS IN BUSSEY-JACKSON - ZAHN FILE.

Exhibit 4

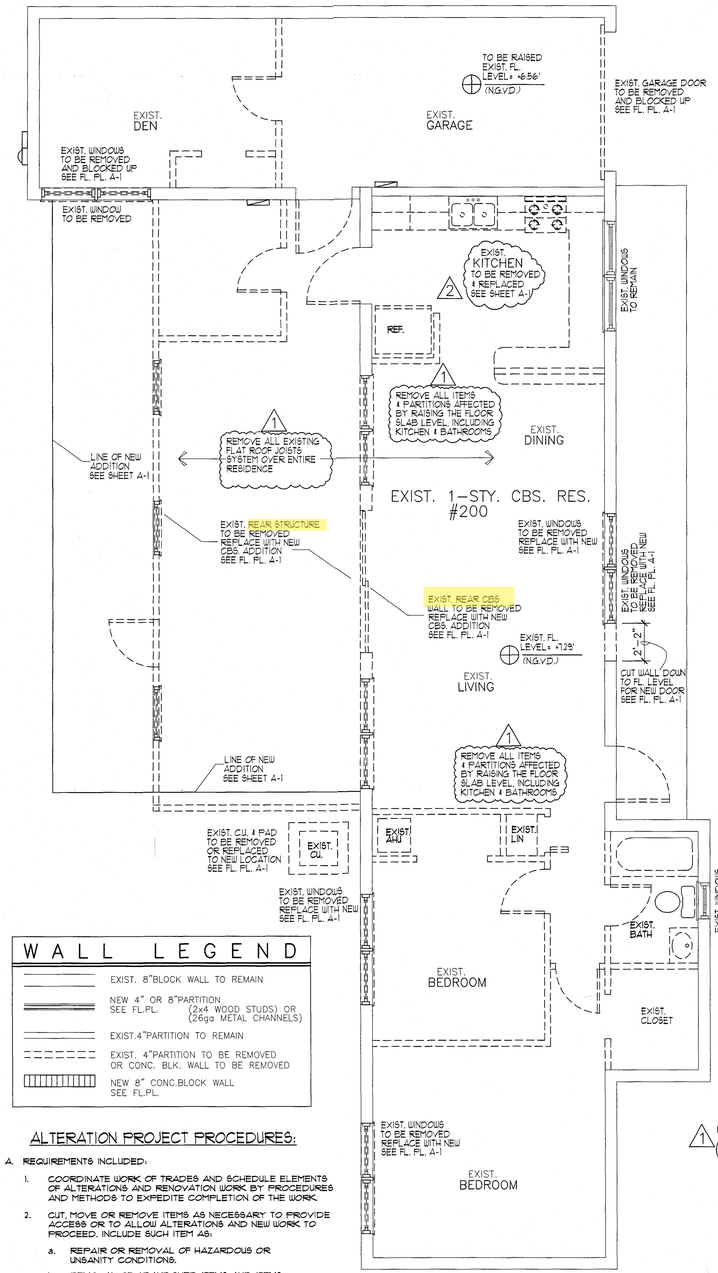

WALL LEGEND

- EXIST. 8"BLOCK WALL TO REMAIN
- NEW 4" OR 8"PARTITION SEE FL.PL. (2x4 WOOD STUDS) OR (26ga METAL CHANNELS)
- EXIST.4"PARTITION TO REMAIN
- EXIST. 4"PARTITION TO BE REMOVED OR CONC. BLK. WALL TO BE REMOVED
- NEW 8" CONC.BLOCK WALL SEE FL.PL.

ALTERATION PROJECT PROCEDURES:

A. REQUIREMENTS INCLUDED:

1. COORDINATE WORK OF TRADES AND SCHEDULE ELEMENTS OF ALTERATIONS AND RENOVATION WORK BY PROCEDURES AND METHODS TO EXPEDITE COMPLETION OF THE WORK.
2. CUT, MOVE OR REMOVE ITEMS AS NECESSARY TO PROVIDE ACCESS OR TO ALLOW ALTERATIONS AND NEW WORK TO PROCEED. INCLUDE SUCH ITEM AS:
   a. REPAIR OR REMOVAL OF HAZARDOUS OR UNSANITY CONDITIONS.
   b. REMOVAL OF ABANDONED ITEMS AND ITEMS SERVING NO USEFUL PURPOSE, SUCH AS ABANDONED PIPING, CONDUIT, AND WIRING.
   c. REMOVAL OF UNSUITABLE OR EXTRAGENEOUS MATERIALS NOT MARKED FOR SALVAGE, SUCH AS ABANDONED EQUIPMENT AND DEBRIS INCLUDING ROTTED WOOD, RUSTED METALS AND DETERIORATED CONCRETE.
3. ALTERATIONS AND CONNECTIONS OF NEW CONTRUCTION TO EXISTING CONSTRUCTION OCCUR AT DUST SENSITIVE AREAS, EXECUTE ALL MEASURES TO COMPLETELY CONTROL AND SEPARATE DUST FROM EXISTING AREA AND EQUIPMENT.

EXIST./DEMO FLOOR PLAN

SCALE: 1/4"=1'-0"

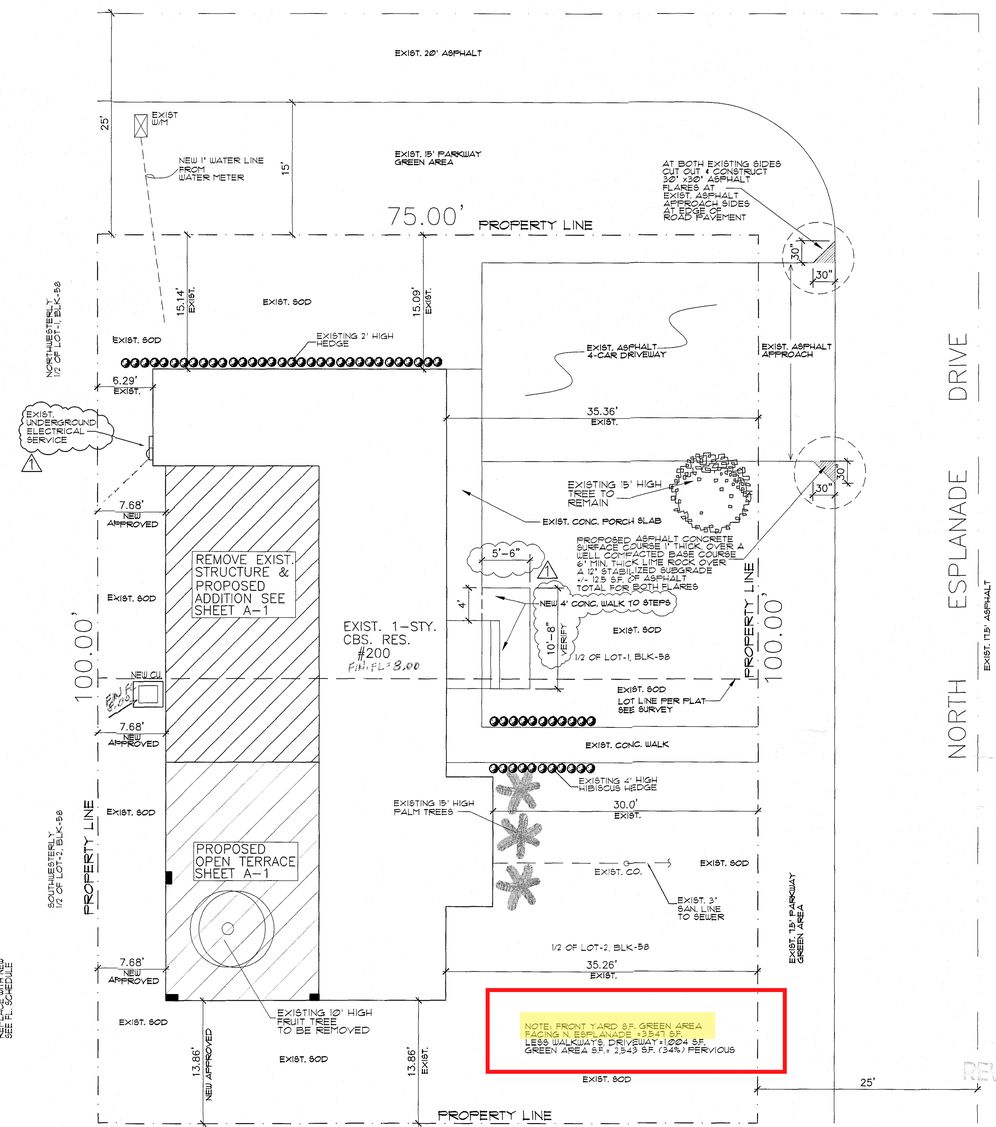

SITE PLAN

SCALE: 1/8"=1'-0"
SEE SURVEY

SCOPE OF WORK:

1
NOTE: THIS IS A EXISTING RESIDENCE WITH MOST OF IT BEING REMODELED.
ALSO THERE IS A PROPOSED ADDITION BEING ADDED TO THE REAR OF RESIDENCE.
REMOVE AND REPLACE ALL WINDOWS AND EXTERIOR DOORS AT EXISTING RESIDENCE.
REMOVE ALL EXIST. FLAT ROOF AND PROVIDE NEW TRUSS SYSTEM OVER ENTIRE STRUCTURE.
REMOVE ALL EXIST. PARTITIONS AND KITCHEN CABINETS (TO REINSTALL LATER).
REMOVE ALL EXIST. BATHROOMS DUE TO RAISING OF THE FLOOR SLAB, SEE D-1 & A-2
PROVIDE NEW ROOF FINISHES AT EXISTING AND NEW ADDITION UNDER A SEPARATE PERMIT.
ADDITION CONSISTS OF 2 NEW BEDROOMS & 2 NEW BATHROOMS WITH DEN.
REMOVE GARAGE DOOR AND BLOCK UP WITH WINDOW AT FRONT AS SHOWN ON A-1.
RELOCATE CERTAIN WINDOW & DOOR OPENINGS AND BLOCK UP OTHER WALL AREAS.
SEE FLOOR PLAN AND SECTIONS FOR NEW & EXIST. BLOCK WALLS & NEW TIE BEAMS.
PROVIDE NEW CONCRETE STARTER COLUMNS & CONC. BEAMS AS SHOWN ON PLAN.
WITH NEW WINDOWS/DOORS, & VERTICAL REBAR TIE COLUMNS AT NEW WALLS.
SEE PLAN FOR ALL NEW AND EXISTING CONDITIONS BEING ALTERED AND OR MODIFIED.
SEE MECHANICAL WORK AS PART OF THIS PERMIT.
SEE ELECTRICAL WORK AS PART OF THIS PERMIT.
SEE PLUMBING WORK AS PART OF THIS PERMIT.

NOTE: THE ARCHITECT OR ENGINEER OF RECORD IS NOT RESPONSIBLE FOR ANY UNEXPECTED OR UNFORESEEN OR HIDDEN EXISTING CONDITIONS THAT HAVE NOTHING TO DO WITH THE PROPOSED WORK. THESE ISSUES IF ANY WILL BE ADDRESSED SEPARATELY, AND ADDED TO THE SCOPE OF WORK.

NOTE: TRADE CONTRACTOR IS RESPONSIBLE FOR ANY COST EFFECTIVE REVISIONS TO PLANS IF ORIGINAL DESIGN OF APPROVED PLANS ARE NOT FOLLOWED. A DIFFERENT METHOD IN DESIGN MAY BE USED AFTER CONSTRUCTION & PERMIT DOCUMENTS ARE ACTIVE IN FIELD, BUT AGAIN TRADE CONTRACTOR WILL BE RESPONSIBLE FOR ANY INCURRED COSTS DUE TO ANY REQUIRED REVISION WORK ON THE ORIGINAL APPROVED PLANS. ANY AND ALL CHANGES TO PLANS MUST BE APPROVED BY THE ENGINEER OR ARCHITECT OF RECORD & BUILDING DEPT. AND WILL BE BILLED ACCORDINGLY.

LEGAL DESCRIPTION: FOLIO#=05-3118-016-1590

SELY 1/2 LOTS 1 & 2, BLOCK 58, OF "CINEMA PARK-COUNTRY CLUB ESTS ADDITION" PLAT BOOK 17, PAGE 2 AS RECORDED 13114-2660 1. OF THE PUBLIC RECORDS OF MIAMI DADE COUNTY.

CALL 48 HOURS BEFORE YOU DIG IN FLORIDA
IT'S THE LAW
1-800-432-4770
SUNSHINE STATE ONE CALL OF FLORIDA, INC.

1
FLOOD CRITERIA INFO:
FLOOD ZONE= AH
BASE FLOOD ELEVATION 7.0'
NEW FLOOR SLAB ELEVATION 8.0' (N.G.V.D.)
SEE ELEVATION CERTIFICATE ATTACHED.

ENVIRONMENTAL RESOURCES & LANDSCAPING TREES NOTES:

NOTE: (1) FRUIT TREE WILL BE REMOVED DURING CONSTRUCTION.
NOTE: FOR ANYOTHER NEARBY TREES THAT MAY BE AFFECTED BY THE NEW CONSTRUCTION PROTECT EXIST. TREES PROVIDE 10'-12' BARRIES AROUND TREES TO REMAIN WITH A TEMPORARY FLYWD. PARTITIONS OR SAFETY MESH ALL DAMAGED PLANT MATERIAL INCLUDING SOD MUST BE RESTORED PRIOR TO FINAL BUILDING INSPECTION.
ALL OTHER EXISTING SHRUBS & HEDGES INCLUDING SOD TO REMAIN AS IS.

DESIGN CRITERIA

CODE EDITION: 2020-7th EDITION FLORIDA BUILDING CODE
AS PER CODE REFERENCE STANDARDS CHAPTER 35
CODE REFERENCES: ASCE/SEI 7-16, ACI 318-14, NDS 2018,AWC AF & PA-92, ASTM A615, ASTM D-698, & AITC, AISI S100-16,
MECHANICAL 2020-7th EDITION FLORIDA BUILDING CODE
ELECTRICAL 2020-7th EDITION FLORIDA BUILDING CODE
PLUMBING 2020-7th EDITION FLORIDA BUILDING CODE
NATIONAL ELECTRIC CODE (NEC 2017)
EXISTING BUILDINGS 2020-7th EDITION FLORIDA BUILDING CODE
FLORIDA FIRE PREVENTION CODE 2020 7th Edition
FLORIDA ACCESSIBILITY CODE 2020 7th Edition
ASCE/SEI 7-16 EXPOSURE CONDITION INDICATED=C
CONSTRUCTION TYPE VB UNPROTECTED
OCCUPANCY CLASSIFICATION R-3
ALTERATION LEVEL-3

I CERTIFY THIS IS BEING DESIGNED TO WITHSTAND 175 MPH WIND SPEED ACCORDING TO ASCE 7-16 AS REQUIRED BY THE FLORIDA BUILDING CODE REVISED 2020 EDITION 7th EDITION

ZONING LEGEND

ZONING CLASSIFICATION	SINGLE FAMILY RESIDENTIAL (R-1C) DISTRICT
TOTAL GROSS LOT AREA:	12,500 SQFT.
NET LOT AREA :	12,500 SQFT.
LOT COVERAGE REQUIRED:	40%
LOT COVERAGE PROVIDED	32%
other conc. impervious areas 850 SF. GREEN AREA TO REMAIN 4,275 51%	
EXIST. BUILD'G. FT. PRINT	1,718 SQFT.
NEW ADDITIONAL S.F.	+ 189 SQFT.
EXIST. BEING REMOVED/REMODELED	- 404 SQFT.
TOTAL NEW UNDER A/C AREA S.F.	1,507 SQFT. A/C
NEW OPEN TERRACE S.F.	+ 467 SQFT.
(NEW TOTAL FT. PRINT S.F.)=	2,314 SQFT.

3 PARKING SPACES REQUIRED.
EXIST. CONC. DRIVEWAY FOR 4 CARS AT FRONT YARD.

SETBACKS REQUIRED:	
FRONT	30.00'
INTERIOR SIDE	7.50'
STREET SIDE	15.00'
REAR	25.00'
BETWEEN BUILDINGS	20.00'

SETBACKS PROVIDED:	
FRONT	15.09' EXIST. CONDITION APPV'D.
INTERIOR SIDE	7.61' PROPOSED
STREET SIDE	38.36' EXIST. CONDITION APPV'D.
REAR	13.86' MATCH EXIST. CONDITION APPV'D.
BETWEEN BUILDINGS	N/A

INDEX OF DRAWINGS

SP-1/D-1 SITE PLAN AND EXIST. & DEMO FLOOR PLAN
A-1 PROPOSED FLOOR PLANS, SCHED. & DETS.
A-2 FOUNDATIONS & STRUCTURAL SECTIONS/DETAILS
A-3 WINDOW SCHEDULES & DETAILS
A-4 PROPOSED ELEVATIONS
A-5 ROOF PLAN & STRUCTURAL DETAILS
A-6 ROOF DIAGRAM & OTHER DETAILS, NOTES.
M-1 MECHANICAL SHEET AND SCHEDULES, DETAILS
E-1 ELECTRICAL SHEET AND SCHEDULES, RISERS
P-1 PLUMBING SHEET AND DETAILS.
P-2 PLUMBING SHEET AND DETAILS.

CITY OF MIAMI SPRINGS
APPROVED
FOR PERMIT OF
INSPECTOR
INSPECTOR
FOR

OFFICE COPY
CITY OF MIAMI SPRINGS

SEPARATE PERMIT REQUIRED FOR ROOFING, PLUMBING ELECTRICAL, MECHANICAL, SHUTTERS, WINDOWS, DOORS AND DRIVEWAYS

NO.	DATE
1	2-22-22 REVISED TO RAISE EXIST. FL. LEVEL TO 8.0
2	
3	
4	

DESC.	DRWN	CHKD	APPV	DATE

PROJECT NAME: ADDITION TO RESIDENCE FOR:
OWNER/PH: AMBAR PREVAL 786-587-7391
ADDRESS:200 N. ESPLANADE DRIVE MIAMI SPRINGS, FLORIDA 33166
PROJECT ADD: SAME

Guillermo Ramon Gonzalez
9000 SW. 168th Avenue Miami Florida 33196 Ph:305-484-8171
Registered Architect #13960 Ph:786-237-5154 (assistant)

101521

SP-1
D-1

STATE OF FLORIDA
GUILLERMO RAMON GONZALEZ
AR0013960
REGISTERED ARCHITECT
Guillermo Ramon Gonzalez
R.A. 13960
STATE OF FLORIDA

City of Miami Springs
201 Westward Drive Miami Springs, FL 33166
Phone: (305) 805-5034 Fax: (305) 805-5036 Website: www.miamisprings-fl.gov

CITY OF MIAMI SPRINGS PLANNING DEPARTMENT

STAFF REPORT

TO	Board of Adjustment / City Council
FROM	Silvia E. Vargas, FAICP, Principal Planner Calvin, Giordano & Associates, Inc. Planning Consultant
CC:	City Manager, City Attorney
DATE OF HEARING(S)	February 24, 2025
SUBJECT	Appeal of Administrative Decision

Case Number(s)	N/A (Appeal)
Applicant(s)	Michelle Ferreira ("Appellant")
Address of Subject Site	200 N. Esplanade ("Property")
Folio Number(s)	05-3118-016-1590
Zoning	R-1C Single Family Residential
Lot Size	7,500 sq. ft.

Request

According to the claim submitted to the City, Appellant is challenging the City's determination of setbacks that allowed the issuance of building permit No. RES21-1143 for the construction of an addition to the existing single-family residence located at 200 N. Esplanade, which adjoins the Appellant's property.

Appellant claims that the administrative determination of the setbacks applicable to the addition is in error and that the addition is illegal in that a rear setback should be applicable between the home at 200 N. Esplanade and the Appellant's property at 300 Falcon Avenue, and therefore seeks to have the aforementioned permit revoked.

The appeal is made pursuant to Section 150-111 of the Miami Springs Zoning Code, which empowers the Board of Adjustment to "hear and decide appeals where it is alleged there is error in any order, requirement, decision, or determination made by the administrative official in the enforcement of this chapter."

Background

The property located at 200 N. Esplanade consists of a corner lot facing Falcon Avenue to the northeast and Esplanade Drive to the southeast. In the northwest and southwest directions, the property abuts two residential lots, including Appellant's property (northwest). (Figure 1)

The lot has a frontage of 75 feet and a depth of 100 feet, with a land area of 7,500 square feet. The property is developed with a single-family residence.

The initial structure, according to the Property Appraiser's page, was built in 1947 as an approximately 1,324 square-foot, 2-bedroom/1-bathroom structure.



Source: Miami Dade County Property Appraiser
Note: Boundaries shown are imprecise and do not reflect surveyed property lines.

Miami-Dade County Public Records indicate that the original property on which the house was built consisted of two platted lots oriented from northwest to southwest and described as Lots 1 and 2, Block 58, of Cinema Park Addition to Country Club Estate, according to the Plat thereof, as recorded in Plat Book 17, Page 2 (Figure 2), with a total area of 15,000 square feet. At the time, pursuant to the Miami Zoning Code subsections 150-003(18) and 150-003(85), the consolidated site would have been considered a corner lot with a frontage on Esplanade Drive due to the shorter dimension (100 ft) of the site facing onto that roadway. Thus the 1947 structure that exists on what today is the 200 N. Esplanade Drive location was built with setbacks in compliance with that orientation.

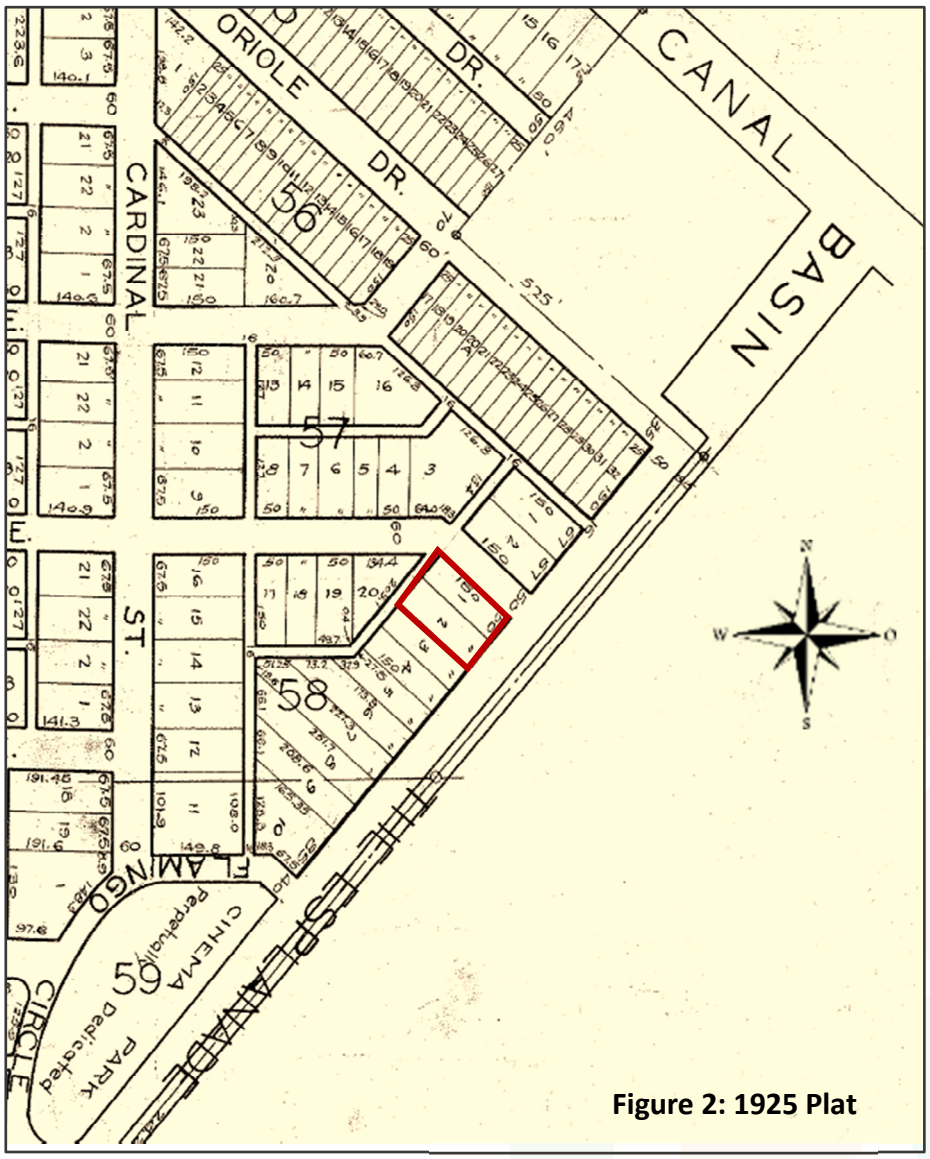

Figure 2: 1925 Plat

Source: Miami Dade County Public Records,
Plat of Cinema Park Addition to Country Club Estates, Plat Book 17, Page 2

However, this changed in 1984. Then-property-owner Thomas Jackson inquired about the process and requirements for subdividing the site. A letter from then Building Official Dave Wells to Mr. Jackson dated June 20, 1984 outlines the steps to follow.

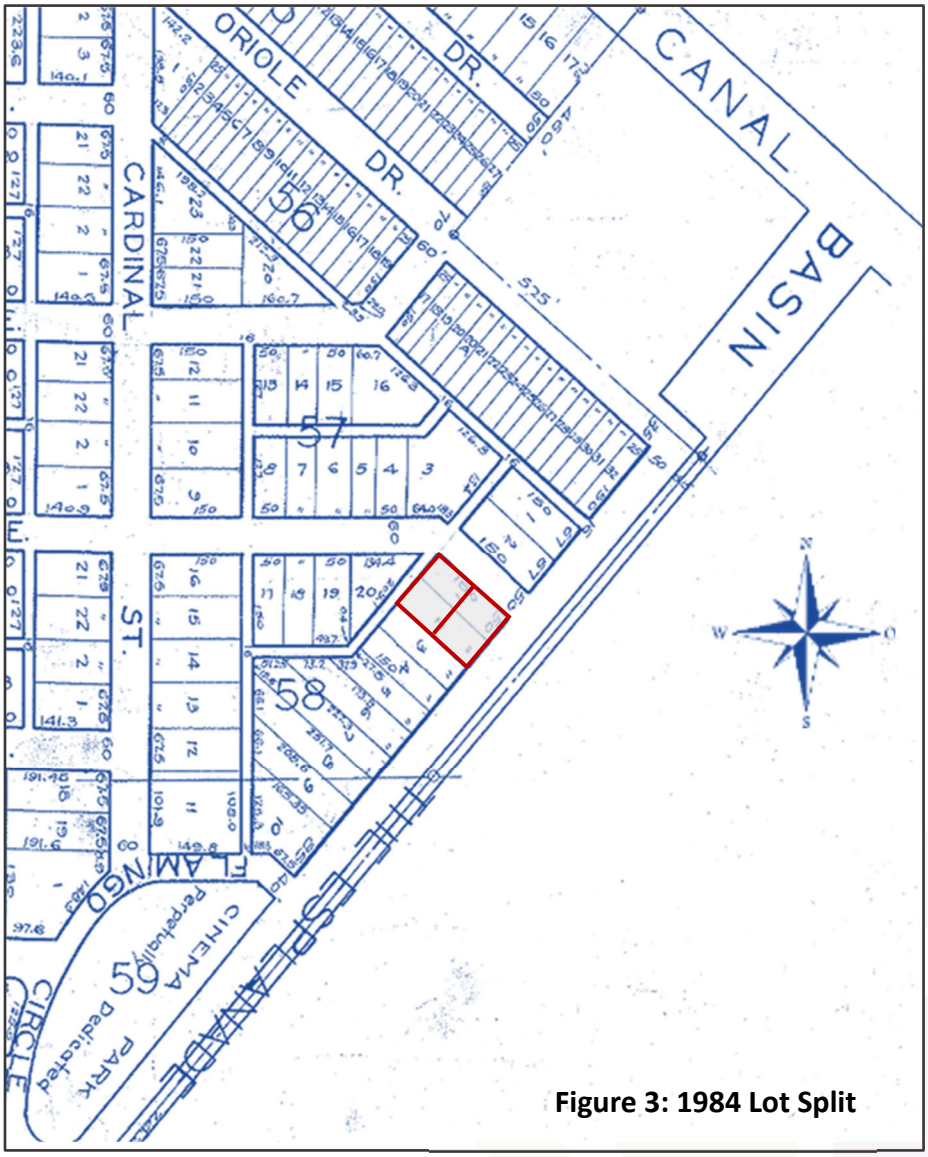

Figure 3: 1984 Lot Split

Source: Miami Dade County Public Records,
Plat of Cinema Park Addition to Country Club Estates, Plat Book 17, Page 2

On August 13, 1984, the City approved, via an administrative waiver of plat, the subdivision of the property into two lots, oriented as they exist today (i.e., along a northeast to southwest axis, as shown in Figure 3). Both lots are 7,500 square feet in land area. (Figures 4 and 5)

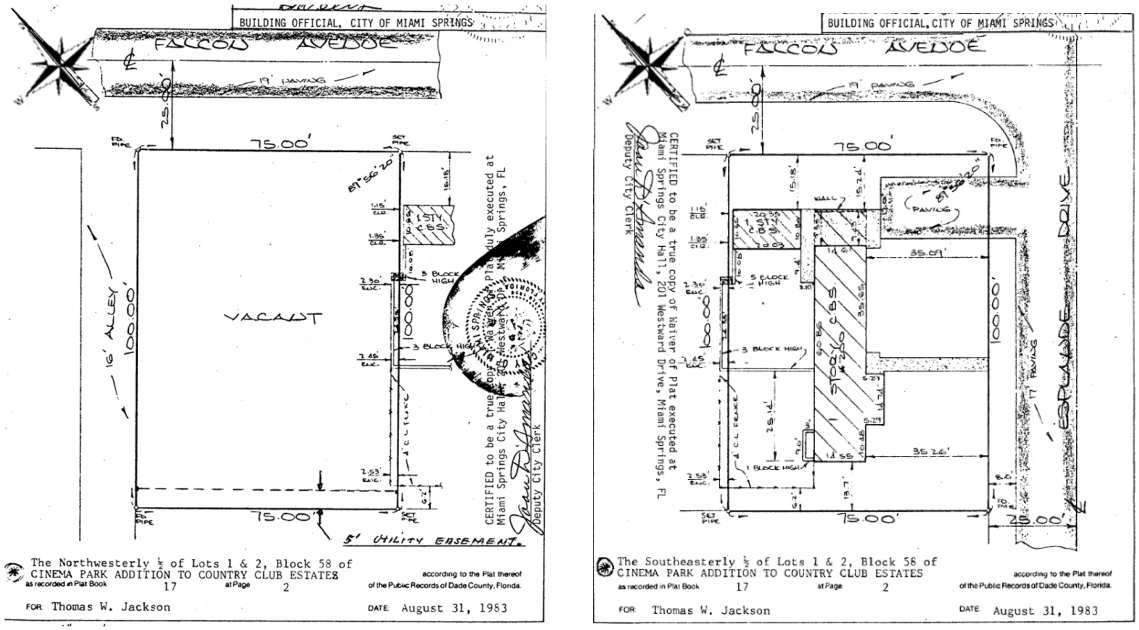

Figures 4 (left) and 5 (right): 1984 Waiver of Plat of 300 Falcon Avenue and 200 N. Esplanade

Source: Miami Springs Public Records.

As seen in Figure 5 above, the existing residential structure remained on what became a new corner lot, with the address 200 N. Esplanade Dr. The second lot, as seen in Figure 4 above, now owned by Appellant, was not developed until 1985, and was assigned the address 300 Falcon.

One of the items outlined in Mr. Wells letter is that, in order for a building permit to be issued for the construction of a home on the 300 Falcon Avenue lot, any and all setback encroachments from prior construction at 200 N. Esplanade Dr. would first need to be removed. The setbacks quoted in this letter were based on an assumption that the front yard remained on Esplanade Dr. as from before the waiver of plat. Consequently, the homeowner applied for a permit (B-415) for "partial demolition of accessory building." On September 7, 1984, Mr. Wells approved this permit. Not only was total demolition of the existing accessory building not required by Mr. Wells to meet the required accessory structure setback, but evidently the partial demolition was deemed to satisfy the requirement outlined in Mr. Wells letter, because a permit was subsequently granted to the owner of 300 Falcon Avenue to build a single-family residence, patio and swimming pool on that lot. This is confirmed by Mr. Well's subsequent letter dated November 27, 1984.

In 2004, the City issued a permit (04-686) to allow an addition to the house which existed along the same side and within the footprint of the new addition now being appealed.

The 2004 addition extended eleven feet and half (11 ft-6 in) from the north side of the house toward Appellant's property. This provided an approximately 13-to-13.5-foot setback from the house to the Appellant's property. Given this projection, the addition could only have been approved if the front yard is along Falcon Avenue, and therefore the yard between the existing house and Appellant's property is a side yard. A side yard would only require a setback of 10% of the lot width, or 7.5 feet in this case, while the rear yard would require a 25-foot setback.

Finally, in 2021, the 200 N. Esplanade Dr. property was acquired by new owners, who applied for a permit to build an addition to the existing structure running along the north (northwest) side of the existing structure and to renovate the existing structure. This permit (No. RES21-1143) is the subject of the current appeal.

Appellant suggests that, in approving the zoning data sheet required with the building permit application for the 200 N. Esplanade property, the prior City Planner erroneously approved the setbacks as if the house fronted Falcon Avenue instead of Esplanade Drive. Appellant claims that the permit should be revoked because the administrative determination of the setbacks applicable to the addition is in error and therefore, the addition itself illegal.

The following analysis will show that the zoning data sheet correctly interprets the applicable yard setbacks, that the administrative determination complies with the Zoning Code and that this determination is in fact consistent with the City's application of setback provisions to the property including the issuance of permits 04-00000686 and 04-0000606 in 2004.

Analysis

As mentioned previously, the property is a corner lot zoned R-1C Single Family Residential. In this zoning district, the minimum required lot size is 6,000 square feet and the minimum frontage 75 feet. The subject lot meets these requirements.

To determine the orientation of a corner lot for the purposes of applying setback regulations, Section 150-002(C) of the Miami Springs Zoning Code (the "City Code") contains in its definitions, subsection (85) "Yard, front," which provides that on corner lots, the front yard is that area of the lot adjacent to the street upon which the lot has the narrowest or least dimension. Planning and Zoning staff consistently rely on this definition to confirm the orientation of corner lots when reviewing applications for compliance with setback requirements. Planning and Zoning staff rely on Section 150-002(C)(18)(e)'s definitions for "Building site," to determine the orientation of corner lots for improvements such as fences, etc. Section 150-002(C)(18)(e) allows the Planning and Zoning Director the possibility to determine that the *lot front* may not be the narrowest portion abutting the street on corner lots to preserve flexibility in design. However, Section 150-

002(C)(18)(e), **does not** provide the flexibility to change the front yard location from where Section 150-002(C)(85) requires it to be. The guidance provided by these definitions is regardless of the physical orientation and location of the front door, which is never mentioned in the Zoning Code.

In the case of the subject property, the smallest of the subject lot's two dimensions, at 75 feet, faces Falcon Avenue, compared to 100 feet facing Esplanade Drive. Therefore, according to the Zoning Code front yard of the property is abutting Falcon Avenue.

Standard	Abuts
Front yard	Falcon Ave
Side yard (interior)	Northwest property line
Side yard (corner)	Esplanade Dr
Rear yard	Southwest property line

The appeal letter states that the Building Official's letter from 1984 determined that "the yard between the Esplanade House and the Falcon Property was a rear yard" and "the yard along Esplanade Drive was the front yard." However, although Mr. Wells' referenced letter to Mr. Jackson (which, it must be emphasized, is not part the Waiver of Approval, as the Appellant's application states) did include an initial interpretation regarding the applicability of setbacks, the subsequent permit history indicates a reconsideration, whereby the City appropriately relies on Section 150-002(C)(85) Zoning Code definition in determining the location of the front yard at 200 Esplanade Drive.

This correction is further supported by the issuance of building permit 04-686 in 2004, which would not have been allowed if this area was considered a rear yard/setback pursuant to the definitions provided in the Zoning Code. These definitions clearly provide that on corner lots, the front is that area of the lot adjacent to the street upon which the lot has the narrowest or least dimension. The smallest of the lot's two dimensions, at 75 feet, faces Falcon Avenue, compared to 100 feet facing Esplanade Drive. Therefore, the lot front and front yard of the property, appropriately determined by Staff in accordance with the Zoning Code, are adjacent to Falcon Avenue.

Similarly, the City issued building permit RES21-1143, not in reliance of a property owner's "erroneous assertions" of the yard orientation, as Appellant claims, but in reliance of the Zoning Code's definitions determining the location of the front yard on this corner lot. Staff's conclusion regarding the front yard, in turn, settled the orientation of the lot's remaining yards and the applicability of the zoning district building setbacks to the addition for the purposes of building permit No. RES21-1143.

Recommendation

As demonstrated through the preceding analysis, the property's relevant permit history (including permits 04-686 in 2004, and RES21-1143 in 2021) are evidence that the City has correctly treated Falcon Avenue as the location of the front yard following the waiver of plat in 1984. To the extent that a determination that the front yard was to be along Esplanade Drive was made by Mr. Wells in his June 20, 1984, letter, that determination was subsequently changed to become consistent with the Zoning Code as the property was modified later on.

In particular, the determination of the front yard of the property leading to the issuance of building permit RES21-1143 clearly was made in accordance with definitions (18)(e), "Building site," and (85), "Yard, front," contained in Section 150-002(C)(85) of the Miami Springs Zoning Code. The determination of the applicable setbacks has been shown to be correct and in full compliance with the provisions of the Zoning Code. The issuance of permit No. RES21-1143 is thus valid and the construction of the addition to the existing residence, legal.

Based on these findings, Staff submits that the Board should recommend upholding the determination of staff, and denial of the appeal to the City Council.

Attachments

1. Appeal package

City of Miami Springs, Florida
Board of Adjustments Meeting
Regular Meeting Minutes
Wednesday, February 26, 2025 at 6:00PM
City Hall Council Chambers
201 Westward Drive, Miami Springs, FL

1. Call To Order/Roll Call:

The meeting was called to order at 6:01 PM

Present: Chair Bill Tallman
Vice Chair Rogelio Madan
Board Member Juan Molina
Board Member Orlando Lamas
Board Member Joe Valencia

Absent: None

2. Approval of the Minutes:

a. February 10, 2025 – Regular Meeting

Vice Chair Madan moved to approve the minutes as written of the February 10, 2025 meeting. Board Member Molina seconded the motion which carried on a 4-0 voice vote. Board Member Molina, Board Member Lamas, Board Member Valencia and Chair Tallman voted YES.

3. Swearing in of All Witnesses:

City Clerk Erika Gonzalez swore in everyone giving testimony during the proceedings.

4. Public Comments:

The following members of the public addressed the Board:

Francisco Fernandez – 1260 Quail Avenue

No further comments received.

5. New Business:

a. APPLICANT: Michelle Ferreira
ADDRESS: 200 N Esplanade Drive
ZONING: R-1C Single Family Residential
LOT SIZE: 7,500 SQ. FT

Vice Chair Madan recommended upholding the administrative official's decision in finding that the front yard of the Esplanade property was located on Falcon, and therefore all other setbacks were based on that determination. Board Member Lamas seconded the motion which carried on a 4-1 rollcall vote. Vice Chair Madan, Board Member Molina, Board Member Lamas and Chair Tallman voted YES. Board Member Valencia voted NO.

6. Adjournment

There being no further business the meeting was adjourned at 09:29 P.M.

Respectfully submitted:

_____
Erika Gonzalez, City Clerk

Adopted by the Board on
this ___ day of _____, 202__.

_____
Bill Tallman, Chair

Words ~~-stricken through-~~ have been deleted. Underscored words represent changes. All other words remain unchanged.

"The comments, discussions, recommendations and proposed actions of City Citizen Advisory Boards do not constitute the policy, position, or prospective action of the City, which may only be established and authorized by an appropriate vote or other action of the City Council".

APPELLANT'S EVIDENCE BINDER

Miami Springs Board of Adjustment

February 19, 2025

Tab	Description
1	Appeal Letter
2	Henry Iler Expert Opinion & CV
3	Esplanade Building Permit Documents
4	Property Appraiser Documents
5	Diagrams
6	Surveys
7	Photographs
8	Esplanade Public Records Part 1 (Waiver of Plat Documents)
9	Esplanade Public Records Part 2
10	Esplanade Admissions as to Rear Yard
11	Zoning Map
12	Miami Springs Code Sections
13	Ordinance 184
14	Ordinance 599-77
15	Ordinances 287 & 750-89
16	Site Plan – 300 Falcon
17	Email from City Clerk's Office re No Variances
18	Florida Planning Officials Handbook
19	Chris Heid Documents

City of Miami Springs
201 Westward Drive Miami Springs, FL 33166
Phone: (305) 805-5034 Fax: (305) 805-5036 Website: www.miamisprings-fl.gov

CITY OF MIAMI SPRINGS
2024 NOV 27 PM 11:37

BASIC SUBMITTAL APPLICATION CHECKLIST

Mandatory Submittals – For all applications

- ☐ Complete Application Form, including all required forms and affidavits, signed by property owner or owner's representative. Forms may be downloaded from the City website or requested by emailing planning@miamisprings-fl.gov.
- ☐ Letter of Authorization from property owner, if different from Applicant.
- ☐ Letter of Intent signed by owner or owner's representative, which may include a narrative describing the project(s), whether the impact of the proposed development is favorable, adverse, or neutral on the economy, public services, environment, and housing supply of the City, and the relationship of the proposed project to surrounding, existing, and proposed Future Land Uses, and to existing zoning, and the City's Comprehensive Plan. This narrative may be provided as a document separate from the letter.
  If variances, special exceptions, appeals, and/or conditional uses are being requested, the extent of these from the requirements shall be noted in the narrative.
  If site plans are being requested, please refer to *Site Plan Application Guidelines Form*.
- ☐ Recent Property Survey prepared by a registered land surveyor that is less than one (1) year old accompanied by a written statement from the property owner that the survey accurately depicts the structures, landscaping, incidental furnishings or equipment and topographical features currently on the subject property according to Sec. 150-027.
- ☐ Engineering, Infrastructure, and Public Works requirements, if applicable.
- ☐ Two (2) full-size sets of paper plan showing the proposed development as described in the Letter of Intent.
- ☐ Digital copies of all required documents must be submitted via email or share-file service to planning@miamisprings-fl.gov.
- ☐ Application Fee and cost recovery deposit as shown in the Official Fee Schedule on the City's website.

CITY OF MIAMI SPRINGS
*** CUSTOMER RECEIPT ***

Oper: MIASJME Type: OC Drawer: 1
Date: 11/27/24 11 Receipt no: 334

Description	Quantity	Amount
DZ	PROJECT REVIEW PASS ON FE	
	1.00	$1000.00
B8	BD - APPLICATION FEES	
	1.00	$100.00

APPEAL VARIANCE TO COUNCIL
PROJECT REVIEW COST RECOVERY
200 N ESPLANADE DRIVE

Tender detail

CK CHECK	1312	$1100.00
Total tendered		$1100.00
Total payment		$1100.00

Trans date: 11/27/24 Time: 11:43:13

akerman

Kristofer D. Machado

Akerman LLP
Three Brickell City Centre
98 Southeast Seventh Street
Suite 1100
Miami, FL 33131

T: 305 374 5600

November 25, 2024

VIA HAND DELIVERY AND EMAIL

Erika Gonzalez-Santamaria, MMC
City Clerk
City of Miami Springs
201 Westward Drive
Miami Springs, Florida 33166
gonzaleze@miamisprings-fl.gov

Silvia Vargas, FAICP, LEED AP
City Planner
City of Miami Springs
Zoning and Planning Department
201 Westward Drive
Miami Springs, Florida 33166
SVargas@cgasolutions.com
planning@miamisprings-fl.gov

Re: Appeal of Erroneous Administrative Determination
200 N. Esplanade Drive / Folio No. 05-3118-016-1590 (the "Esplanade Property")

Mmes. Gonzalez-Santamaria and Vargas:

This law firm represents Michelle Ferreira, the owner of 300 Falcon Avenue, Miami Springs, FL 33166 ("**Falcon Property**"). This is an appeal, pursuant to Section 150-111 of the Miami Springs ("**City**") Code of Ordinances ("**Code**"), challenging an erroneous administrative determination regarding the setbacks applicable to an illegal addition being constructed at the Esplanade Property, immediately adjacent to Ms. Ferreira's property.

For the reasons explained, the addition being constructed at the Esplanade Property is unlawful because it does not provide a conforming 25-foot rear yard setback as required by the waiver of plat for the Esplanade Property and Section 150-043 of the Code. Accordingly, the City must revoke building permit number RES21-1143 ("**Building Permit**"), which was issued on or about May 18, 2022, without notice to Ms. Ferreira as to either the permit or the erroneous administrative setback determination that disregards the waiver of plat condition, and must issue a stop-work order enjoining the unlawful improvements.

PROPERTY BACKGROUND

The Esplanade Property is improved with a single-family residence that faces Esplanade Drive (the "**Esplanade House**"). The Esplanade House was built in 1947 across two platted lots, legally described as:

Lots 1 and 2, Block 58, of CINEMA PARK ADDITION TO COUNTRY CLUB ESTATES, according to the Plat thereof, as recorded in Plat Book 17, Page 2, of the Public Records of Miami-Dade County, Florida.

As shown on the recorded subdivision plat, Lot 1 was a corner lot and Lot 2 was an interior lot. Each lot measured 50' x 150' with the Esplanade Property and the Falcon Property comprising a single building site measuring 100' x 150' (collectively, the "**Building Site**"). The Esplanade House was constructed on the portion of the Building Site that would become the Esplanade Property following the 1984 Waiver of Plat Approval described below. The remainder of the Building Site, which would become the Falcon Property, was then vacant land.

The Esplanade House is located in the R-1C district ("**R-1C**"). At the time the Esplanade House was constructed, it complied with the provisions of the Code, including the setbacks for the R-1C district (**Exhibit 1** attached hereto).



REQUIRED SETBACKS		
	Required	Provided
Front (Esplanade Drive)	30'	35.26'
Rear	25'	25.14'
Side	10' (10%)	13.86'
Side – street (Falcon Ave)	15'	15.09'

WAIVER OF PLAT AND BINDING SETBACK DETERMINATION

In 1983-84, the then-owner of the Building Site filed an application seeking the City's approval to subdivide the Building Site into two 75' x 100' lots (i.e. the Esplanade Property and the Falcon Property).

The City approved the subdivision in 1984 through a waiver of plat.[1] The City conditioned that subdivision approval on the owner satisfying several requirements, as outlined in a letter from the City Building Official dated June 20, 1984 (**Exhibit 2** attached hereto) (the "**1984 Waiver of Plat Approval**"), most notably the following:

1. The Esplanade House must be located on a 75' x 100' lot.
2. The Esplanade House must comply with all setback requirements of the R-1C district.
3. The Esplanade House must provide the following minimum setbacks: front yard setback of 30'; rear yard setback of 25'; 15' setback on the side of the house facing Falcon Avenue, and a 10' setback on the south side of the house.

[1] The City did not have a Code-prescribed waiver of plat process in 1984. The current waiver of plat process was not codified until 1989. However, this appeal does not challenge the 1984 Waiver of Plat Approval.

Importantly, as part of the 1984 Waiver of Plat Approval, the Building Official determined that the yard between the Esplanade House and the Falcon Property was a **rear** yard, requiring a 25' **rear** yard setback. This is evident from condition (3) above that "side" yard setbacks were required along the Esplanade House's south property line and the property line facing Falcon Avenue. Condition (3) of the 1984 Waiver of Plat Approval thus made clear that the yard along Esplanade Drive was the front yard and the yard facing the Falcon Property was the rear yard.[2] The Building Official's determination was fully consistent with the physical orientation of the Esplanade House — at all times since its construction in 1947, the front of the Esplanade House has faced Esplanade Drive and the rear has faced the Falcon Property.

Moreover, the Building Official also reiterated in the 1984 Waiver of Plat Approval that no building permit for the Falcon Property could be issued until all encroachments on the Esplanade Property into the required setbacks had been removed. At the time, the Esplanade Property was improved with the Esplanade House and an accessory structure located in the rear yard of the Esplanade Property, near the property line that divides the Esplanade Property from the Falcon Property. Thus, to ensure that the Esplanade Property provided a fully conforming **rear** yard setback of 25 feet between the existing residence and the Falcon Property, the Building Official required that the accessory structure be demolished.

The City Building Official advised the owner that if it wanted to retain the accessory structure, the owner would have to appeal to the Board of Adjustment:

> Since the structures seem only to be of an accessory value, please remove them to a line that will yield 10% on side and 25' in the rear, as a description for setbacks.
>
> Field corrected surveys will be acceptable, if initialed by the engineer. "Saving" part of the utility room would be a matter for reference to the Board of Adjustment.

The owner did not appeal to the Board of Adjustment. Instead, the owner accepted the Building Official's determination and proceeded to demolish the accessory structure to provide a conforming 25-foot rear yard setback (**Exhibit 3** attached hereto):

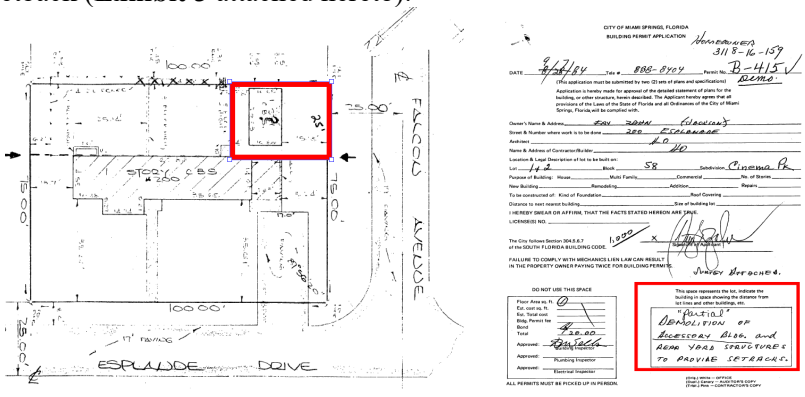

[2] Section 150-002(18) of the Code provides that "[f]or corner lots, the lot front shall be the narrowest portion abutting the street, unless determined otherwise by the planning and zoning director." In the 1984 Waiver of Plat Approval, the Building Official determined that the front of the Esplanade Property is the portion abutting Esplanade Drive. Further, Section 150-002(85) provides that "[t]he rear yard shall be that portion of the lot that is opposite and most distant from the front yard." Therefore, when the Building Official determined as part of the 1984 waiver of plat that the Esplanade Drive frontage was the "front" of the Esplanade Property, he necessarily determined that the yard nearest the Falcon Property is the "rear" yard, because that yard is "opposite and most distant from the front yard."

Once the accessory structure was demolished, the Esplanade Property achieved the following setbacks, which complied with the R-1C requirements:

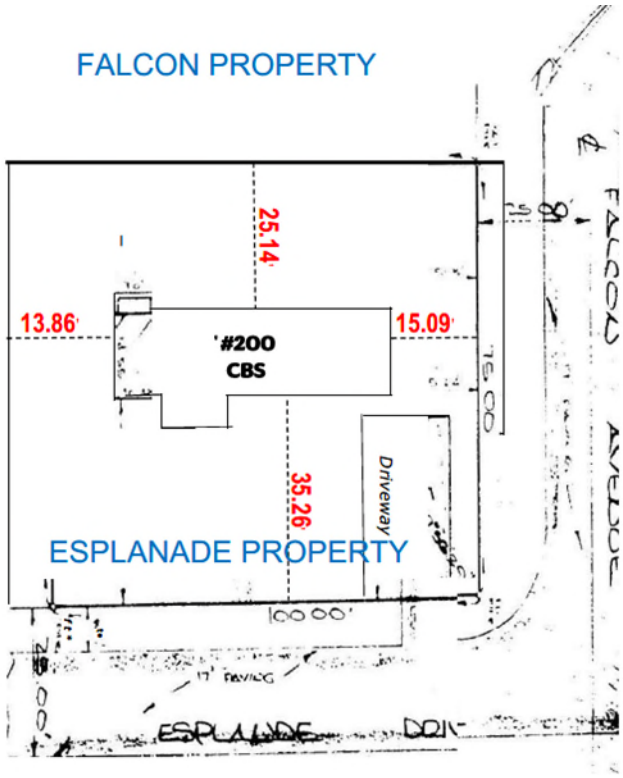

SETBACKS SATISFIED FOR WAIVER OF PLAT		
	Required	Provided
Front (N Esplanade Drive)	30'	35.26'
Rear (Side of Falcon Property)	25'	25.14'
Side (Adj. to Lot 3)	10' (10%)	13.86'
Side – street (Falcon Ave)	15'	15.09'

After all the conditions to the 1984 Waiver of Plat Approval had been met, the City issued a building permit in 1985 for the construction of a new residence on the Falcon Property.

ILLEGAL ESPLANADE PROPERTY ADDITION

Our review of public records reveals the following facts. In August 2021, the Esplanade Property was sold to the current owners, Jovany Jimenez and Ambar Sara Preval (together, "**Esplanade Owner**"). On December 21, 2021, the Esplanade Owner submitted an application for a building permit for the construction of a new addition at the rear of the Esplanade House and overall remodeling of the existing structure. As required by the City, the Esplanade Owner completed and filed with the City a project data form with a side-by-side table comparing the required setbacks and area calculations to those that would be provided after the addition was constructed.

In completing the data form, the Esplanade Owner erroneously calculated the setbacks as if the Esplanade House fronted Falcon Avenue instead of Esplanade Drive, alleging that the yard between the Esplanade Property and the Falcon Property was a "side" yard. But, in light of the 1984 Waiver of Plat Approval, the Esplanade Owner knew or should have known that it is a **rear** yard, requiring a **25**-foot setback. In fact, in various documents submitted with the permit application, the Esplanade Owner admitted that the proposed alterations and improvements would occur in the "rear" of the Esplanade House, facing the Falcon Property (**Exhibit 4** attached hereto).

The Esplanade Owner also erroneously asserted that the Esplanade Property contained non-conforming front yard and rear yard setbacks that were "exist[ing] condition approved" and that the proposed addition's minimal setbacks were thus "approved to match exist[ing] condition." The Esplanade Owner did not have any basis to conclude (and the City did not have any basis to accept) that the Esplanade Property's front and rear setbacks were non-conforming, nor did the Esplanade Owner have any basis to represent to the City that the yard between the Esplanade Property and the Falcon Property was a "side" yard. Indeed, the 1984 Waiver of Plat Approval determined to the contrary. The Code provisions establishing the minimum setbacks for the R-1C district are the same today as they were in 1947 when the Esplanade House was built and were also the same in 1984 when the waiver of plat was approved.

When the Esplanade Owner purchased the Esplanade Property, it acquired the property subject to the requirements of the 1984 Waiver of Plat Approval, including the obligation to provide and maintain a conforming rear yard setback of 25 feet between the rear of the Esplanade Residence and the Falcon Property. The Esplanade Owner was on constructive notice of those requirements, which are referenced in the deed to the Falcon Property and are readily available in the City's files. Of course, the properties' legal descriptions make obvious that the lots have been subdivided from a larger tract. That alone should have prompted the Esplanade Owner to review the City's files and other public records to become informed of the applicable restrictions. *See Palm Beach Polo, Inc. v. Village of Wellington,* 918 So. 2d 988, 992-93 (Fla. 4th DCA 2006) ("[a]n owner is legally obligated to examine the public records of the zoning authority and is on constructive notice of the ordinances, resolutions, and filed plans and restrictions governing a parcel of property.").

The Esplanade Owner's project data form should have reflected the following setbacks, consistent with the requirements of the 1984 waiver of plat:

Required		ESPLANADE PERMIT APPLICATION	Required		CORRECT DATA
Front (Falcon)	30'	15.09'	Front (Esplanade)	30'	35.26'
Rear	25'	13.86'	Rear	25'	25.14'
Side	7.5' (10%)	7.67'	Side	10' (10%)	13.86'
Side (Street)	15'	35.36'	Side (Street - Falcon)	15'	15.09'

Despite the City's own records, the City issued the Building Permit in reliance on the Esplanade Owner's erroneous assertions as to the yard orientations. As a result, the addition under construction on the Esplanade Property provides only 7.6 feet of separation from the Falcon Property and encroaches into the required rear yard setback by 17.4 feet. And Ms. Ferreira received no notice of the City's erroneous setback determination.

INVALID BUILDING PERMIT MUST BE REVOKED

The Building Permit for the proposed addition is invalid because the proposed addition does not conform to the 25-foot rear yard setback required by the waiver of plat and Section 150-043 of the Code. Further, in issuing the Building Permit, City staff disregarded Section 151-08 of the Code, which requires that "[b]efore any permit is issued, all provisions of Chapter 150, Zoning Code, and any amendments thereto shall be complied with, and the provisions of the building code shall not be construed to repeal, supersede, or modify any part of Chapter 150, or amendments thereto."

The facts here are squarely analogous to those in *Metropolitan Dade County v. Fontainebleau Gas & Wash,* 570 So. 2d 1006, 1008 (Fla. 3d DCA 1990). In *Fontainebleau,* a property owner had nearly

finished constructing a gas station on its property when the county realized that the building permit was issued in violation of a zoning obligation that had been imposed 15 years earlier, requiring the property to be used only for a bank or savings and loan. The restriction was contained in a resolution approving a rezoning of the property, which referenced a zoning covenant in the county's files that had not ultimately been recorded against the property. Because the restriction was contained in a resolution that was maintained in the public records, albeit not recorded in the official records book, the court enforced the restriction against the owners. The court held that "[s]uch a restriction on the property's use which was made in the public interest became binding on the property," and "since the property owners were bound by law to be on notice of the [county's land use records], they cannot claim detrimental reliance on the permit inadvertently issued by the county." *Id.* at 1007-08. Ultimately, the *Fontainebleau* court concluded that the existence of the zoning resolution in the county's files "demonstrates on its face that construction of a gas station would be illegal[.]" *Id.* at 1007. So too here: the further subdivision of a previously platted lot as described in the Esplanade Owner's deed put the Owner on constructive notice to look for a regulatory approval to subdivide that lot and any conditions attendant thereto; the Building Official's 1984 Waiver of Plat Approval is readily available in the City's files; and that approval plainly demonstrates that the Esplanade Owner's addition violates the R-1C rear yard setback requirements.

Moreover, the Building Official's 1984 determination is protected by the doctrine of administrative *res judicata* or administrative finality. *See Metro. Dade Cnty. Bd. of Cnty. Com'rs v. Rockmatt Corp.,* 231 So. 2d 41, 44 (Fla. 3d DCA 1970). The doctrine of administrative finality requires that longstanding zoning determinations be honored and enforced. As articulated by the *Rockmatt* court, "[t]he doctrine is applicable to rulings or decisions of administrative bodies . . . dealing with zoning regulations unless it can be shown that since the earlier ruling thereon there has been a substantial change of circumstances relating to the subject matter with which the ruling was concerned, sufficient to prompt a different or contrary determination[.]" As applicable here, the Building Official conditioned the waiver of plat on there being a full 25-foot rear yard setback between the Esplanade Property and the Falcon Property, a requirement that remains in effect today in the R-1C district. Rather than appeal the Building Official's determination or seek other relief from the Board of Adjustment, the Esplanade Owner's predecessor accepted and assented to the Building Official's determination, and so the determination became final and binding on the owner and its successors, as in *Fontainebleau*. Further, there has not been any change of circumstances, much less a "substantial change of circumstances," that would permit the City to overturn the Building Official's determination: the Esplanade House exists today in the same physical configuration and orientation as it did when it was constructed in 1947 and when the City approved the waiver of plat in 1984, and the applicable rear setback is exactly the same, 25 feet. That new officials with a different view of things might be in charge of zoning matters at the City today is a wholly insufficient basis on which to overturn the 1984 Waiver of Plat Approval condition. *Cf. Sakolsky v. City of Coral Gables,* 151 So. 2d 433, 435 (Fla. 1963) (the potential for turnover and change in city government personnel does not justify "instability in municipal action").

Even if the doctrine of administrative finality did not apply to these facts, current City staff members still would be powerless to modify the conditions of the 1984 Waiver of Plat Approval. The current Code vests the City Council —and the City Council alone — with the power and authority to approve modifications to plats and waivers of plat. *See* Code Section 150-020 (vesting the City Council with the exclusive power to decide whether to approve or deny any plat modifications and waivers of plat). And any such approval would have to be done through a duly noticed, quasi-judicial public hearing. *See Broward Cnty. v. G.B.V. Intern., Ltd.*, 787 So. 2d 838, 845 (Fla. 2001) (holding that plat approval was a quasi-judicial decision).

Because the Building Permit as issued violates the conditions of the 1984 Waiver of Plat Approval, the City must revoke it, issue a stop-work order enjoining the unlawful improvements, and require the Esplanade Owner to provide a conforming 25-foot rear yard setback between the Esplanade Property and the Falcon Property.

REQUEST FOR HEARING

Please schedule this appeal for hearing before the Board of Adjustment at the next available meeting date. We look forward to presenting testimony and other evidence to the Board of Adjustment in support of these and other arguments for why the Building Permit is invalid and must be revoked.

Thank you.

AKERMAN LLP



Kristofer D. Machado

Enclosures

cc (via email): J.C. Jimenez, City Manager (jimenezjc@miamisprings-fl.gov)
Haydee S. Sera, Esq., City Attorney (hsera@wsh-law.com)
Michelle Ferreira, Esq. (michelle.ferreira@akerman.com)

Exhibit 1

1983 JUL 14 PM 1:50 83R187750

WARRANTY DEED
INDIVID. TO INDIVID

OFF REC 11846 PG 1826

RAMCO FORM 01

This Warranty Deed *Made the* 11th *day of* July *A. D. 19* 83 *by*

THOMAS WAYNE JACKSON and PATRICE BUSSEY JACKSON, his wife

hereinafter called the grantor, to THOMAS W. JACKSON

whose postoffice address is 200 N. Esplanade Drive
hereinafter called the grantee: Miami Springs, Florida

(Wherever used herein the terms "grantor" and "grantee" include all the parties to this instrument and the heirs, legal representatives and assigns of individuals, and the successors and assigns of corporations)

Witnesseth: *That the grantor, for and in consideration of the sum of* $ 10.00 *and other valuable considerations, receipt whereof is hereby acknowledged, hereby grants, bargains, sells, aliens, remises, releases, conveys and confirms unto the grantee, all that certain land situate in* County, Florida, *viz:*

Lots 1 and 2, in Block 58, of CINEMA PARK ADDITION TO COUNTRY CLUB ESTATES, according to the Plat thereof, recorded in Plat Book 17, at Page 2, of the Public Records of Dade County, Florida.

Together *with all the tenements, hereditaments and appurtenances thereto belonging or in anywise appertaining.*

To Have and to Hold, *the same in fee simple forever.*

And *the grantor hereby covenants with said grantee that the grantor is lawfully seized of said land in fee simple; that the grantor has good right and lawful authority to sell and convey said land; that the grantor hereby fully warrants the title to said land and will defend the same against the lawful claims of all persons whomsoever; and that said land is free of all encumbrances, except taxes accruing subsequent to December 31,* 19 82

In Witness Whereof, *the said grantor has signed and sealed these presents the day and year first above written.*

Signed, sealed and delivered in our presence:

Elaine Walters

Patrice Bussey Jackson (L.S.)
PATRICE BUSSEY JACKSON

Thomas Wayne Jackson (L.S.)
THOMAS WAYNE JACKSON

STATE OF FLORIDA
COUNTY OF DADE

I HEREBY CERTIFY that on this day, before me, an officer duly authorized in the State aforesaid and in the County aforesaid to take acknowledgments, personally appeared

THOMAS WAYNE JACKSON and PATRICE BUSSEY JACKSON

to me known to be the persons described in and who executed the foregoing instrument and who acknowledged before me that they executed the same.

WITNESS my hand and official seal in the County and State last aforesaid this 11th day of July A. D. 19 83.

NOTARY PUBLIC STATE OF FLORIDA AT LARGE
MY COMMISSION EXPIRES AUG 20 1984
BONDED THRU GENERAL INS. UNDR.

NOTARY PUBLIC, State of Florida at Large

This Instrument prepared by ROBERT J. SCREMIN, P.A.
Address 3471 E. 26 Street
Miami, Florida 33137

SPACE BELOW FOR RECORDERS USE

$ 87.75 Documentary Stamps Collected
Dade County
Richard P. Brinker
Clerk, Circuit & County Courts
By F. Stewart 7/14/83 DC

RECORDED IN OFFICIAL RECORDS BOOK OF DADE COUNTY, FLORIDA.
RECORD VERIFIED
RICHARD P. BRINKER
CLERK CIRCUIT COURT



PHYSICAL SURVEY

OF

Lots 1 & 2 Block 73 Cinema Park Addition to Country Club Estates, Recorded in Plat Book 17 Page 21, Public Records of Dade County, Florida.

THIS IS TO CERTIFY THAT WE SURVEYED THE PROPERTY SHOWN ON THE PLAT AND THAT THE TITLE LINES AND THE WALLS OF THE BUILDING ARE AS SHOWN HEREON AND STAND WITHIN THE TITLE LINES AND THAT THERE ARE NO ENCROACHMENTS UPON THE PROPERTY.

SIGNED W. J. Knox

W. J. KNOX
LICENSED CIVIL ENGINEER NO. 713
REG. LAND SURVEYOR NO. 104

SCALE 1"=40'

Exhibit 2

BUILDING AND ZONING DEPARTMENT
201 WESTWARD DRIVE
MIAMI SPRINGS, FL 33166

TELEPHONE
(305) 885-4581

20 June 1984

Mr. Thomas W. Jackson
200 N. Esplanade Drive
Miami Springs, FL 33166

Dear Mr. Jackson:

In compliance with your request, this letter is to advise you of the City's requirements should the owner of the 100' x 150' lot located at 200 Esplanade Drive wish to subdivide the lot into two 75'x100' lots.

1. First, the owner of the subject property should submit a letter to this department requesting the City's approval to subdivide the lot into two 75' x 100' parcels. If the owner intends to apply for a building permit for the subdivided property, the letter should state this intention.

2. Along with the letter, there should be a copy of a current survey showing the location of all improvements on the property. The improvements should be restricted to a 75' x 100' portion of the overall platted lot of record and must not encroach upon the 75' x 100' portion for which the owner intends to apply for a building permit. Furthermore, the existing improvements must comply with all setback requirements. In this case, the house which is presently situated on the lot and facing 200 N. Esplanade Drive must:

a) Be located on a 75' x 100' lot.

b) Have minimum setbacks: front yard setback of 30'; rear yard setback of 25'; 15' setback on the side of the house facing Falcon Avenue, and a 10' setback on the south side of the house.

No building permit can be issued for the remaining 75' x 100' portion of the platted lot until all encroachments into the above described setback areas have been removed.

3. The owner should provide a survey showing the proposed locations of water, sewer, electric, telephone, gas and television cable. The ap-

To: Thomas W. Jackson

Re: 200 N. Esplanade Drive

propriate utility agencies must approve the locations and relocations of all utilities.

4. A "Waiver of Plat" must be prepared for the City Manager's signature.

5. The owner must pay the cost of extending sewer lateral to the property line.

6. The owner must also pay the cost of a sewer assessment which is required by Chapter 50, Section 50.20 of the City Code. This section is attached hereto for your reference.

Yours truly,

Dave Wells
Building Official

DW/jd
Attch.

cc: City Manager

Exhibit 3

City of
MIAMI SPRINGS
Florida

BUILDING AND ZONING DEPARTMENT
201 WESTWARD DRIVE
MIAMI SPRINGS, FL 33166

TELEPHONE
(305) 885-4581

13 September 1983

Mr. Irving Zahn
Irv Zahn, Inc.
78 Canal Street
Miami Springs, FL 33166

Mr. Thomas W. Jackson
200 N. Esplanade Drive
Miami Springs, FL 33166

Re: 200 Esplanade Dr./300 Falcon Ave.

Gentlemen:

The division of land in order to build new homesites is in keeping with municipal growth and rising values. Congratulations.

Two surveys of at least 75' x 100' can be accepted and approved if no permanent construction violates a clear separation of the lots, and/or creates a nonconforming improvement situation.

Since the structures seem only to be of an accessory value, please remove them to a line that will yield 10% on side and 25' in the rear, as a description for setbacks.

Field corrected surveys will be acceptable, if initialed by the engineer. "Saving" part of the utility room would be a matter for reference to the Board of Adjustment.

If you require further clarification of this program, please do not hesitate to call.

Yours truly,

Dave Wells
Building Official
City of Miami Springs

DW/jd

J.H. MANUCY, INC.

PROFESSIONAL LAND SURVEYORS

[illegible] • Suite 203 • [illegible] Florida 33012
DADE [illegible] • [illegible] BROWARD [illegible]

I HEREBY CERTIFY THAT THIS PLAT OF SURVEY WAS PREPARED UNDER MY DIRECTION; THAT IT MEETS THE MINIMUM TECHNICAL STANDARDS FOR LAND SURVEYING IN THE STATE OF FLORIDA (CHAPTER 21HH-6 FLORIDA ADMINISTRATIVE CODE) FOR THE TYPE OF SURVEY SHOWN HEREON AND IS TRUE AND CORRECT TO THE BEST OF MY KNOWLEDGE AND BELIEF

J.H. Manucy, Professional Land Surveyor #1128
John F. Pierce, Professional Land Surveyor #2691

State of Florida Date September 1, 1983

BOUNDARY SURVEY

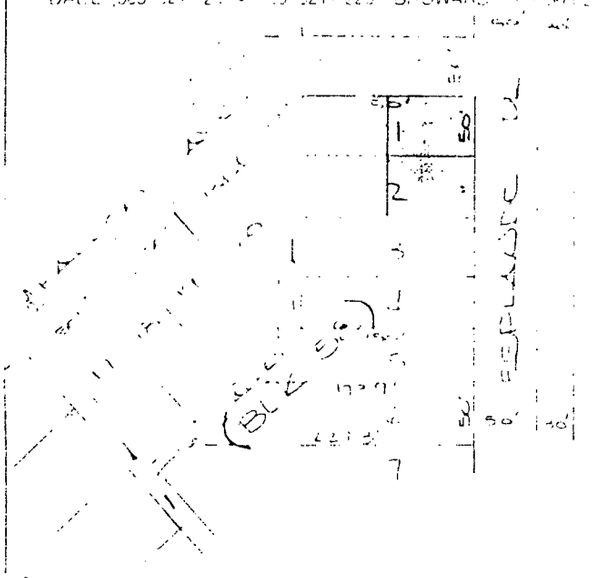

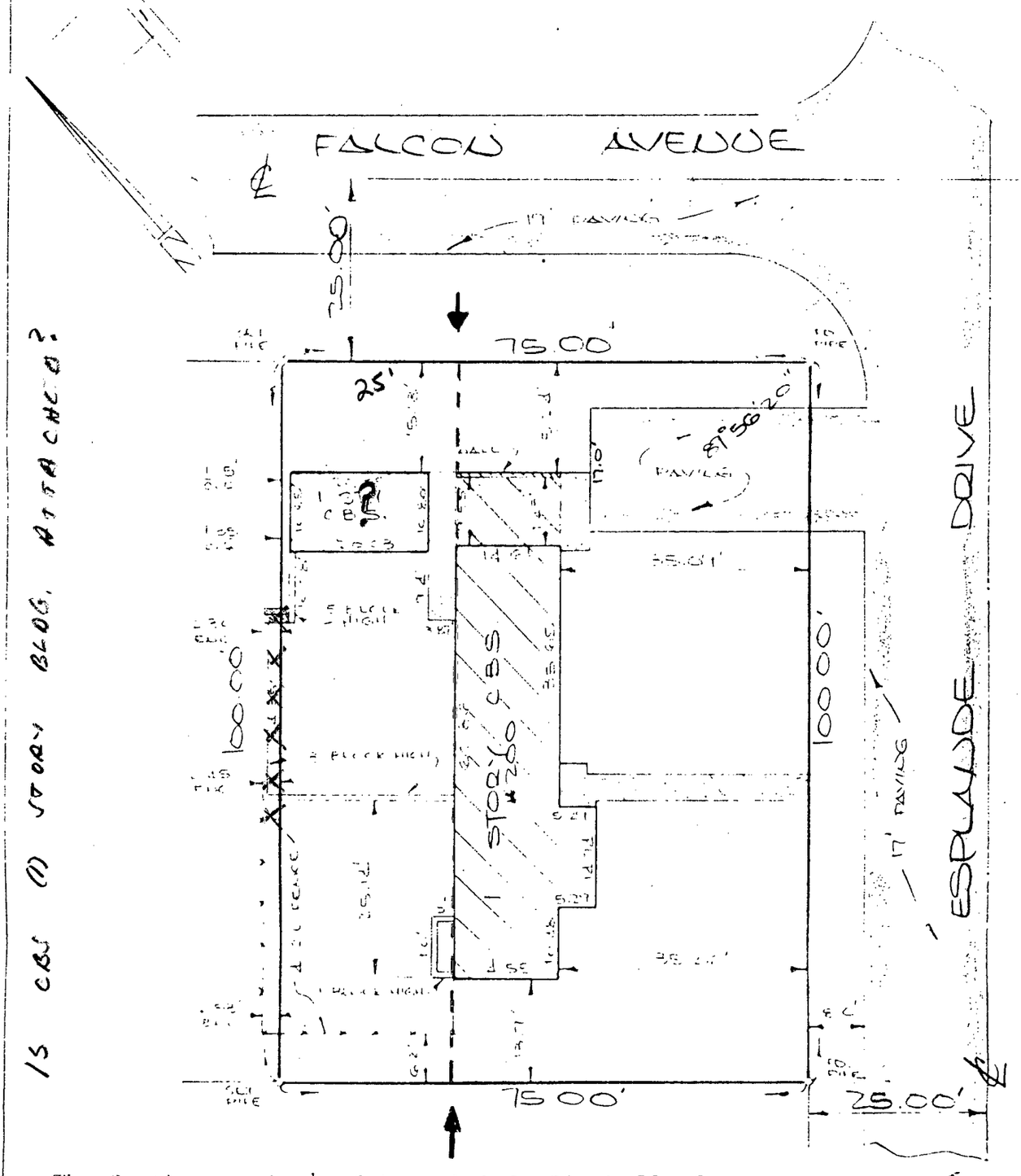

The Southeasterly ½ of Lots 1 & 2, Block 58 of CINEMA PARK ADDITION TO COUNTRY CLUB ESTATES according to the Plat thereof as recorded in Plat Book 17 at Page 2 of the Public Records of Dade County, Florida.

FOR Thomas W. Jackson DATE August 31, 1983

SCALE 1" = 20' ORDER No. 27237 F.B. A152-49 REV.

REV.

CITY OF MIAMI SPRINGS, FLORIDA

BUILDING PERMIT APPLICATION

HOMEOWNER

3118-16-159

DATE 9/17/84 (8/28/84) Tele # 888-8404 Permit No. B-415 ✓

Demo.

(This application must be submitted by two (2) sets of plans and specifications)

Application is hereby made for approval of the detailed statement of plans for the building, or other structure, herein described. The Applicant hereby agrees that all provisions of the Laws of the State of Florida and all Ordinances of the City of Miami Springs, Florida, will be complied with.

Owner's Name & Address FAY ZADA (JACKSON)

Street & Number where work is to be done 200 ESPLANADE

Architect NO

Name & Address of Contractor/Builder NO

Location & Legal Description of lot to be built on:

Lot 1 & 2 Block 58 Subdivision Cinema Pk

Purpose of Building: House ____ Multi Family ____ Commercial ____ No. of Stories ____

New Building ____ Remodeling ____ Addition ____ Repairs ____

To be constructed of: Kind of Foundation ____ Roof Covering ____

Distance to next nearest building ____ Size of building lot ____

I HEREBY SWEAR OR AFFIRM, THAT THE FACTS STATED HEREON ARE TRUE.

LICENSE(S) NO. ____

The City follows Section 304.5.6.7 of the SOUTH FLORIDA BUILDING CODE. 1,000

X ____
Signature of Applicant

FAILURE TO COMPLY WITH MECHANICS LIEN LAW CAN RESULT IN THE PROPERTY OWNER PAYING TWICE FOR BUILDING PERMITS.

SURVEY ATTACHED.

DO NOT USE THIS SPACE

Floor Area sq. ft.	0
Est. cost sq. ft.	
Est. Total cost	
Bldg. Permit fee	
Bond	
Total	20.00

Approved: ____ Building Inspector

Approved: ____ Plumbing Inspector

Approved: ____ Electrical Inspector

ALL PERMITS MUST BE PICKED UP IN PERSON.

This space represents the lot, indicate the building in space showing the distance from lot lines and other buildings, etc.

"partial" DEMOLITION OF ACCESSORY BLDG. and REAR YARD STRUCTURES TO PROVIDE SETBACKS.

(Orig.) White — OFFICE
(Dupl.) Canary — AUDITOR'S COPY
(Tripl.) Pink — CONTRACTOR'S COPY

MIN. FEE: $20.00

A F F I D A V I T

Date _____

City of Miami Springs
Building and Zoning Department
201 Westward Drive
Miami Springs, Florida 33166

In making application for a Building Permit for constructing a building, remodeling, making repairs, or adding an addition at this address: Demo.: accessory Bldg.

which is zoned: _____

I agree that this structure will be used in accordance with the Zoning classification.

/ss/ _____
PROPERTY OWNER

SWORN TO AND SUBSCRIBED BEFORE ME,

This 6th day of Sept., 1984.

_____
Notary Public State of Florida

My Commission expires:

Reference: Miami Springs Code of Ordinances:
#184 of 2-8-1954 and
#224 of 5-26-1958.

NOTE: SEE DOCUMENTS IN BUSSEY-JACKSON - ZAHN FILE.

Exhibit 4

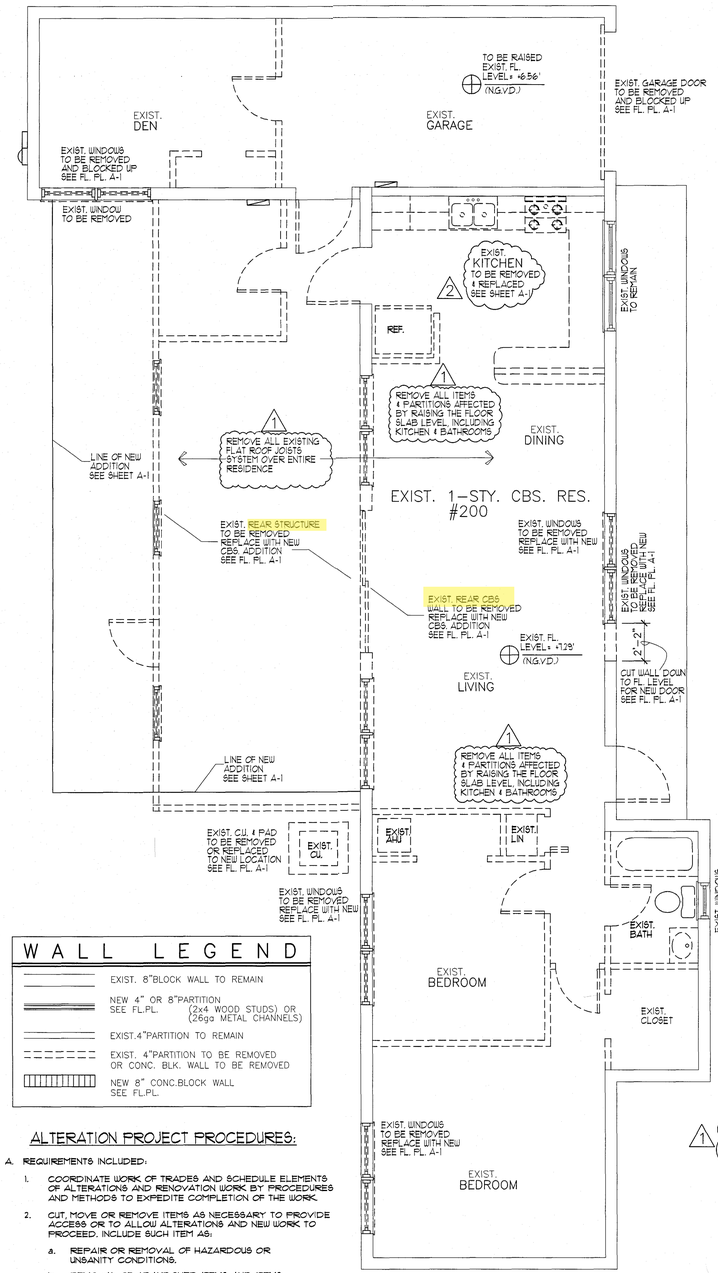

WALL LEGEND

- EXIST. 8"BLOCK WALL TO REMAIN
- NEW 4" OR 8"PARTITION SEE FL.PL. (2x4 WOOD STUDS) OR (26ga METAL CHANNELS)
- EXIST.4"PARTITION TO REMAIN
- EXIST. 4"PARTITION TO BE REMOVED OR CONC. BLK. WALL TO BE REMOVED
- NEW 8" CONC.BLOCK WALL SEE FL.PL.

ALTERATION PROJECT PROCEDURES:

A. REQUIREMENTS INCLUDED:

1. COORDINATE WORK OF TRADES AND SCHEDULE ELEMENTS OF ALTERATIONS AND RENOVATION WORK BY PROCEDURES AND METHODS TO EXPEDITE COMPLETION OF THE WORK.
2. CUT, MOVE OR REMOVE ITEMS AS NECESSARY TO PROVIDE ACCESS OR TO ALLOW ALTERATIONS AND NEW WORK TO PROCEED. INCLUDE SUCH ITEM AS:
   a. REPAIR OR REMOVAL OF HAZARDOUS OR UNSANITY CONDITIONS.
   b. REMOVAL OF ABANDONED ITEMS AND ITEMS SERVING NO USEFUL PURPOSE, SUCH AS ABANDONED PIPING, CONDUIT, AND WIRING.
   c. REMOVAL OF UNSUITABLE OR EXTRAGENEOUS MATERIALS NOT MARKED FOR SALVAGE, SUCH AS ABANDONED EQUIPMENT AND DEBRIS INCLUDING ROTTED WOOD, RUSTED METALS AND DETERIORATED CONCRETE.
3. ALTERATIONS AND CONNECTIONS OF NEW CONTRUCTION TO EXISTING CONSTRUCTION OCCUR AT DUST SENSITIVE AREAS. EXECUTE ALL MEASURES TO COMPLETELY CONTROL AND SEPARATE DUST FROM EXISTING AREA AND EQUIPMENT.

EXIST./DEMO FLOOR PLAN

SCALE: 1/4"=1'-0"

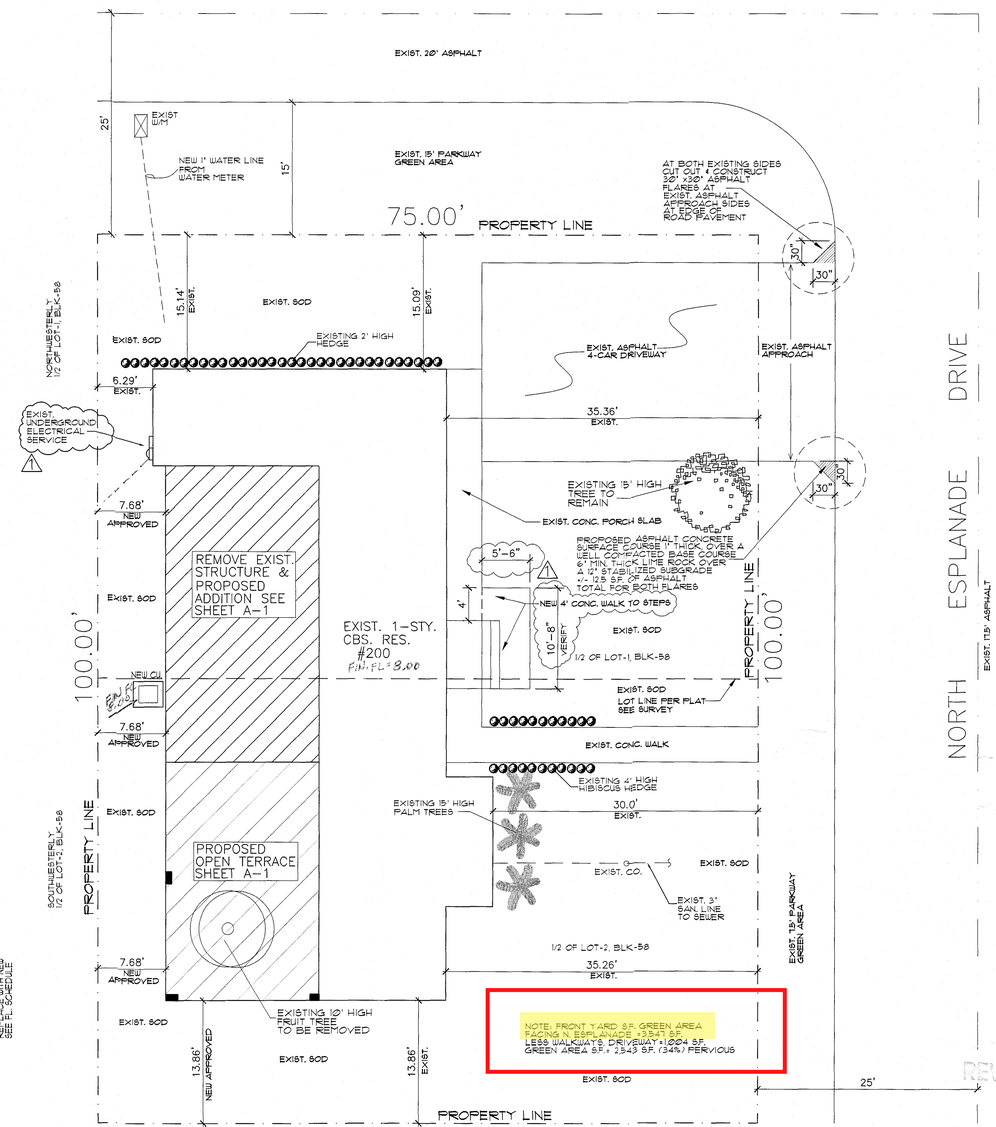

SITE PLAN

SCALE: 1/8"=1'-0"
SEE SURVEY

SCOPE OF WORK:

1

NOTE: THIS IS A EXISTING RESIDENCE WITH MOST OF IT BEING REMODELED.
ALSO THERE IS A PROPOSED ADDITION BEING ADDED TO THE REAR OF RESIDENCE.
REMOVE AND REPLACE ALL WINDOWS AND EXTERIOR DOORS AT EXISTING RESIDENCE.
REMOVE ALL EXIST. FLAT ROOF AND PROVIDE NEW TRUSS SYSTEM OVER ENTIRE STRUCTURE.
REMOVE ALL EXIST. PARTITIONS AND KITCHEN CABINETS (TO REINSTALL LATER).
REMOVE ALL EXIST. BATHROOMS DUE TO RAISING OF THE FLOOR SLAB, SEE D-1 & A-2
PROVIDE NEW ROOF FINISHES AT EXISTING AND NEW ADDITION UNDER A SEPARATE PERMIT.
ADDITION CONSISTS OF 2 NEW BEDROOMS & 2 NEW BATHROOMS WITH DEN.
REMOVE GARAGE DOOR AND BLOCK UP WITH WINDOW AT FRONT AS SHOWN ON A-1.
RELOCATE CERTAIN WINDOW & DOOR OPENINGS AND BLOCK UP OTHER WALL AREAS.
SEE FLOOR PLAN AND SECTIONS FOR NEW & EXIST. BLOCK WALLS & NEW TIE BEAMS.
PROVIDE NEW CONCRETE STARTER COLUMNS & CONC. BEAMS AS SHOWN ON PLAN.
WITH NEW WINDOWS/DOORS, & VERTICAL REBAR TIE COLUMNS AT NEW WALLS.
SEE PLAN FOR ALL NEW AND EXISTING CONDITIONS BEING ALTERED AND OR MODIFIED.
SEE MECHANICAL WORK AS PART OF THIS PERMIT.
SEE ELECTRICAL WORK AS PART OF THIS PERMIT.
SEE PLUMBING WORK AS PART OF THIS PERMIT.

NOTE: THE ARCHITECT OR ENGINEER OF RECORD IS NOT RESPONSIBLE FOR ANY UNEXPECTED OR UNFORESEEN OR HIDDEN EXISTING CONDITIONS THAT HAVE NOTHING TO DO WITH THE PROPOSED WORK. THESE ISSUES IF ANY WILL BE ADDRESSED SEPARATELY, AND ADDED TO THE SCOPE OF WORK.

NOTE: TRADE CONTRACTOR IS RESPONSIBLE FOR ANY COST EFFECTIVE REVISIONS TO PLANS IF ORIGINAL DESIGN OF APPROVED PLANS ARE NOT FOLLOWED. A DIFFERENT METHOD IN DESIGN MAY BE USED AFTER CONSTRUCTION & PERMIT DOCUMENTS ARE ACTIVE IN FIELD, BUT AGAIN TRADE CONTRACTOR WILL BE RESPONSIBLE FOR ANY INCURRED COSTS DUE TO ANY REQUIRED REVISION WORK ON THE ORIGINAL APPROVED PLANS. ANY AND ALL CHANGES TO PLANS MUST BE APPROVED BY THE ENGINEER OR ARCHITECT OF RECORD & BUILDING DEPT. AND WILL BE BILLED ACCORDINGLY.

LEGAL DESCRIPTION: FOLIO#=05-3118-016-1590

SELY 1/2 LOTS 1 & 2, BLOCK 58, OF "CINEMA PARK-COUNTRY CLUB ESTS ADDITION" PLAT BOOK 17, PAGE 2 AS RECORDED 13114-2660 1. OF THE PUBLIC RECORDS OF MIAMI DADE COUNTY.

CALL 48 HOURS BEFORE YOU DIG IN FLORIDA
IT'S THE LAW
1-800-432-4770
SUNSHINE STATE ONE CALL OF FLORIDA, INC.

1

FLOOD CRITERIA INFO:
FLOOD ZONE= AH
BASE FLOOD ELEVATION 7.0'
NEW FLOOR SLAB ELEVATION 8.0' (N.G.V.D.)
SEE ELEVATION CERTIFICATE ATTACHED.

ENVIRONMENTAL RESOURCES & LANDSCAPING TREES NOTES:

NOTE: (1) FRUIT TREE WILL BE REMOVED DURING CONSTRUCTION.
NOTE: FOR ANYOTHER NEARBY TREES THAT MAY BE AFFECTED BY THE NEW CONSTRUCTION
PROTECT EXIST. TREES
PROVIDE 10'-12' BARRIES AROUND TREES TO REMAIN WITH A TEMPORARY PLYWD. PARTITIONS OR SAFETY MESH
ALL DAMAGED PLANT MATERIAL INCLUDING SOD MUST BE RESTORED PRIOR TO FINAL BUILDING INSPECTION.
ALL OTHER EXISTING SHRUBS & HEDGES INCLUDING SOD TO REMAIN AS IS.

DESIGN CRITERIA

CODE EDITION: 2020-7th EDITION FLORIDA BUILDING CODE
AS PER CODE REFERENCE STANDARDS CHAPTER 35
CODE REFERENCES: ASCE/SEI 7-16, ACI 318-14, NDS 2018,AWC AF & PA-92, ASTM A615, ASTM D-698, & AITC, AISI S100-16,
MECHANICAL 2020-7th EDITION FLORIDA BUILDING CODE
ELECTRICAL 2020-7th EDITION FLORIDA BUILDING CODE
PLUMBING 2020-7th EDITION FLORIDA BUILDING CODE
NATIONAL ELECTRIC CODE (NEC 2017)
EXISTING BUILDINGS 2020-7th EDITION FLORIDA BUILDING CODE
FLORIDA FIRE PREVENTION CODE 2020 7th Edition
FLORIDA ACCESSIBILITY CODE 2020 7th Edition
ASCE/SEI 7-16 EXPOSURE CONDITION INDICATED=C
CONSTRUCTION TYPE VB UNPROTECTED
OCCUPANCY CLASSIFICATION R-3
ALTERATION LEVEL-3

I CERTIFY THIS IS BEING DESIGNED TO WITHSTAND 175 MPH WIND SPEED ACCORDING TO ASCE 7-16 AS REQUIRED BY THE FLORIDA BUILDING CODE REVISED 2020 EDITION 7th EDITION

ZONING LEGEND

ZONING CLASSIFICATION	SINGLE FAMILY RESIDENTIAL (R-1C) DISTRICT
TOTAL GROSS LOT AREA:	12,500 SQFT.
NET LOT AREA :	12,500 SQFT.
LOT COVERAGE REQUIRED:	40%
LOT COVERAGE PROVIDED	32%
other conc. impervious areas 850 SF. GREEN AREA TO REMAIN 4,275 51%	
EXIST. BUILD'G. FT. PRINT	1,718 SQFT.
NEW ADDITIONAL S.F.	+ 189 SQFT.
EXIST. BEING REMOVED/REMODELED	- 404 SQFT.
TOTAL NEW UNDER A/C AREA S.F.	1,507 SQFT. A/C
NEW OPEN TERRACE S.F.	+ 467 SQFT.
(NEW TOTAL FT. PRINT S.F.)=	2,314 SQFT.

3 PARKING SPACES REQUIRED.
EXIST. CONC. DRIVEWAY FOR 4 CARS AT FRONT YARD.

SETBACKS REQUIRED:	
FRONT	30.00'
INTERIOR SIDE	7.50'
STREET SIDE	15.00'
REAR	25.00'
BETWEEN BUILDINGS	20.00'

SETBACKS PROVIDED:	
FRONT	15.09' EXIST. CONDITION APPV'D.
INTERIOR SIDE	7.61' PROPOSED
STREET SIDE	35.36' EXIST. CONDITION APPV'D.
REAR	13.86' MATCH EXIST. CONDITION APPV'D.
BETWEEN BUILDINGS	N/A

INDEX OF DRAWINGS

SP-1/D-1 SITE PLAN AND EXIST. & DEMO FLOOR PLAN
A-1 PROPOSED FLOOR PLANS, SCHED. & DETS.
A-2 FOUNDATIONS & STRUCTURAL SECTIONS/DETAILS
A-3 WINDOW SCHEDULES & DETAILS
A-4 PROPOSED ELEVATIONS
A-5 ROOF PLAN & STRUCTURAL DETAILS
A-6 ROOF DIAGRAM & OTHER DETAILS, NOTES.
M-1 MECHANICAL SHEET AND SCHEDULES, DETAILS
E-1 ELECTRICAL SHEET AND SCHEDULES, RISERS
P-1 PLUMBING SHEET AND DETAILS.
P-2 PLUMBING SHEET AND DETAILS.

CITY OF MIAMI SPRINGS
APPROVED
FOR PERMIT OF
INSPECTOR
INSPECTOR
DATE

OFFICE COPY
CITY OF MIAMI SPRINGS

SEPARATE PERMIT REQUIRED FOR ROOFING, PLUMBING ELECTRICAL, MECHANICAL, SHUTTERS, WINDOWS, DOORS AND DRIVEWAYS

NO.	DATE
1	2-22-22 REVISED TO RAISE EXIST. FL. LEVEL TO 8.0
2	
3	
4	

DES'D	DRWN	CHK'D	APP'D	DATE
.	.	.	.	.

PROJECT NAME: ADDITION TO RESIDENCE FOR:
OWNER/PH: AMBAR PREVAL 786-587-7391
ADDRESS:200 N. ESPLANADE DRIVE MIAMI SPRINGS, FLORIDA 33166
PROJECT ADD: SAME

Guillermo Ramon Gonzalez
9000 SW. 168th Avenue Miami Florida 33196 Ph:305-484-8171
Registered Architect #13960 Ph:786-237-5154 (assistant)

STATE OF FLORIDA
GUILLERMO RAMON GONZALEZ
AR0013960
REGISTERED ARCHITECT
Guillermo Ramon Gonzalez
R.A. 13960
STATE OF FLORIDA

101521

SP-1
D-1

City of Miami Springs Board of Adjustment Hearing

Appeal of Administrative Determination of Building Setbacks at 200 North Esplanade Drive

Planning and Zoning Opinion

Prepared By: Henry Iler, AICP
Iler Planning Inc.
2-18-25

Introduction

I have been retained by the owner of 300 Falcon Avenue, Michelle Ferreira, to render a professional planning and zoning opinion with regard to the appropriateness of the administrative determination of required setbacks rendered by Miami Springs City staff in 2022 during issuance of a building permit for an addition being constructed on the adjacent Esplanade property.

I. Background

Exhibit A contains the current summary report from the County Property Appraiser's Office for the parcel at 200 North Esplanade Drive (Esplanade lot) and the parcel at 300 Falcon Avenue (Falcon lot). In 1947, a house was built at 200 North Esplanade Drive across 2 platted lots, highlighted in yellow in Exhibit B. The lots are located in the City's R-1C Single Family Residential zoning district and each lot measured 50 feet by 150 feet. In 1983-84, the then-owner of the Esplanade house filed an application with the City to re-subdivide the lots into 2 lots measuring 75 feet by 100 feet. It was determined at the time that this re-subdivision could be accomplished via a Waiver of Plat. When the Waiver was approved, the Esplanade house was on the resulting corner lot and the other vacant parcel became an interior lot located on Falcon Avenue (Falcon house). Exhibit C contains the June 1984 letter from the City Building Official to the 200 Esplanade property owner listing 6 requirements for the Plat Waiver. The following requirements are most relevant to this case:

1.) The existing Esplanade house must provide the following minimum setbacks: front 30 feet on Esplanade Drive, rear 25 feet, side facing Falcon Avenue 15 feet, and south side of the house 10 feet.
2.) All encroachments into the setbacks described above must be removed prior to issuance of a building permit for a new house on the interior Falcon lot.

After all conditions of the 1984 Waiver of Plat were met, the City issued a building permit for a home on the interior Falcon lot and it was constructed shortly thereafter at 300 Falcon Avenue within the required setbacks.

In December 2021, the Esplanade house owner filed for a building permit to construct a new addition at the rear of the home. The building plans altered the traditional setbacks of the Esplanade home to treat the side on Falcon Avenue as the front of the lot and the former rear yard next to the Falcon property as a side yard requiring only a 7.5-foot setback. A City building permit was issued

for the addition located 7.68 feet from the Falcon lot. Exhibit D contains the site plan for the addition with the setback next to the Falcon lot circled in red. No evidence was found showing a zoning setback variance application was submitted at the time by the owner for the 17.32-foot rear yard encroachment. In addition, no written determination was prepared by City staff in 2022 recognizing the prior 1984 waiver of plat conditions and providing any justification as to why the setbacks for the Esplanade house identified and documented in the platting process in 1984 should be changed in 2022.

II. Relevant Facts

The Miami-Dade County subdivision (platting) code was 1st adopted by the County Commission in 1957 and it applies countywide including in all municipalities. It was established to make sure when large parcels are subdivided community planning objectives were accomplished in the process such as the provision of sound development principles, stable communities, healthy living environments and a safe and convenient road system.

In 1984, Miami Springs was obligated by the County Code to process plats and waiver of plats, and send them to the County for review and approval. The conditions and requirements associated with any plat or waiver of plat must be adhered to in the development of a parcel.

The City Building Official in 1984 reviewed the proposed waiver of plat and issued requirements as specified in the letter in Exhibit C; relevant points are summarized below.

1.) Front building setback is measured from North Esplanade Drive and must be a minimum of 30 feet.
2.) Rear yard setback is a minimum of 25 feet and measured from the property line for the future Falcon house.
3.) Side setback from Falcon Avenue must be a minimum of 15 feet.

In 1977, the City adopted Code Section 150-002 (c)(18)(e) stating for corner lots, the lot front shall be the narrowest portion abutting the street, unless determined otherwise by the planning and zoning director. In 1984, this Code provision was in effect and the Building Official at the time determined the front of the subject lot was on North Esplanade Drive as it had been since 1947.

The professionals preparing the building plans also recognized the logical front and rear yards of the house. The electrical, plumbing and other building plans for the Esplanade addition repeatedly refer to the yard adjacent to the Falcon house as the rear yard or rear of the house.

It should also be noted the City's issuance of the building permit for the addition in 2022 created 2 new zoning setback variances at this location. With the yard on Falcon Avenue erroneously shown as the front yard in the permit plans, the required front setback would be 30 feet. However the permit plans allowed the front setback on Falcon Avenue to be 15.09 feet, approximately 50% less than the required setback. Also, the permit allowed a rear yard setback of 13.86 feet which is 45% less than the required rear setback of 25 feet. These variances were listed as "existing condition approved" by the architect on the addition site plan (Exhibit D) and there is no written

evidence these variances were expressly approved per City Code. The permit was issued with unapproved setback variances and an incorrect setback orientation.

III. Conclusion

The subdivision of land is a basic land development tool in the County. The waiver of plat setback requirements for the Esplanade parcel in 1984 by the Building Official were appropriate based on the history of the parcel and surrounding orientation of the homes. The Esplanade house was built in 1947, and the front and rear yards were established at that time. The house front was on North Esplanade Drive and it was addressed on that street. For 47 years this was the case, until the building permit for the addition in 2022. There is no indication City staff were aware of the prior 1984 setback requirements and no written rationale given for changing the setback orientation of the home in 2022. Also, there is no express approval of the new, unapproved setback pattern with the lot front erroneously on Falcon Avenue with 2 newly-created variances in the front and rear which were never appropriately addressed.

The new addition is being built in the required 25-foot rear yard setback for the Esplanade home, established in 1947 and verified by the City Building Official in 1984, with a rear setback variance of 17.4 feet which was never approved by the City Council. The 1984 Waiver of Plat staff requirements reaffirming the rear yard of the Esplanade house as the area adjacent to the Falcon lot and requiring the removal of all encroachments into that rear yard setback area was a condition of approval and should be enforced today.

In my opinion the building permit for the addition was issued in error should be stayed until the unapproved rear setback deficiency adjacent to the Falcon home can be addressed.

Signed:



Henry Iler, AICP

Exhibit A

Property Information for Esplanade and Falcon Lots

PROPERTY APPRAISER OF MIAMI-DADE COUNTY

Summary Report

Generated On: 02/17/2025

PROPERTY INFORMATION

Folio	05-3118-016-1591
Property Address	300 FALCON AVE MIAMI SPRINGS, FL 33166-4414
Owner	MICHELLE N FERREIRA TRS , MICHELLE N FERREIRA REVOCABLE TR
Mailing Address	300 FALCON AVE MIAMI SPRINGS, FL 33166
Primary Zone	0400 SGL FAMILY - 901-1200 SQF
Primary Land Use	0101 RESIDENTIAL - SINGLE FAMILY : 1 UNIT
Beds / Baths /Half	3 / 2 / 0
Floors	1
Living Units	1
Actual Area	2,700 Sq.Ft
Living Area	1,917 Sq.Ft
Adjusted Area	2,308 Sq.Ft
Lot Size	7,500 Sq.Ft
Year Built	1985



ASSESSMENT INFORMATION

Year	2024	2023	2022
Land Value	$360,000	$281,250	$225,000
Building Value	$208,689	$250,176	$252,057
Extra Feature Value	$12,890	$13,054	$13,218
Market Value	$581,579	$544,480	$490,275
Assessed Value	$309,917	$300,891	$292,128

BENEFITS INFORMATION

Benefit	Type	2024	2023	2022
Save Our Homes Cap	Assessment Reduction	$271,662	$243,589	$198,147
Homestead	Exemption	$25,000	$25,000	$25,000
Second Homestead	Exemption	$25,000	$25,000	$25,000

Note: Not all benefits are applicable to all Taxable Values (i.e. County, School Board, City, Regional).

SHORT LEGAL DESCRIPTION

CINEMA PARK COUNTRY CLUB ESTS
ADDN
PB 17-2
NWLY 1/2 LOTS 1 & 2 BLK 58
LOT SIZE 75.000 X 100

TAXABLE VALUE INFORMATION

Year	2024	2023	2022
COUNTY			
Exemption Value	$50,000	$50,000	$50,000
Taxable Value	$259,917	$250,891	$242,128
SCHOOL BOARD			
Exemption Value	$25,000	$25,000	$25,000
Taxable Value	$284,917	$275,891	$267,128
CITY			
Exemption Value	$50,000	$50,000	$50,000
Taxable Value	$259,917	$250,891	$242,128
REGIONAL			
Exemption Value	$50,000	$50,000	$50,000
Taxable Value	$259,917	$250,891	$242,128

SALES INFORMATION

Previous Sale	Price	OR Book-Page	Qualification Description
04/20/2023	$100	33689-0924	Corrective, tax or QCD; min consideration
04/14/2023	$100	33689-0922	Corrective, tax or QCD; min consideration
03/23/2012	$320,000	28047-4333	Qual by exam of deed
07/21/2011	$210,500	27810-4806	Financial inst or "In Lieu of Forclosure" stated

The Property Appraiser is continually editing and updating the tax roll. This website may not reflect the most current information on record. The Property Appraiser and Miami-Dade County assumes no liability, see full disclaimer and User Agreement at http://www.miamidade.gov/info/disclaimer.asp

PROPERTY APPRAISER OF MIAMI-DADE COUNTY

Summary Report

Generated On: 02/17/2025

PROPERTY INFORMATION

Folio	05-3118-016-1590
Property Address	200 N ESPLANADE DR MIAMI SPRINGS, FL 33166-4412
Owner	JOVANY JIMENEZ , AMBAR SARA PREVAL
Mailing Address	3145 NW 32 ST MIAMI, FL 33142
Primary Zone	0400 SGL FAMILY - 901-1200 SQF
Primary Land Use	0101 RESIDENTIAL - SINGLE FAMILY : 1 UNIT
Beds / Baths /Half	2 / 1 / 0
Floors	1
Living Units	1
Actual Area	1,867 Sq.Ft
Living Area	1,533 Sq.Ft
Adjusted Area	1,495 Sq.Ft
Lot Size	7,500 Sq.Ft
Year Built	Multiple (See Building Info.)



ASSESSMENT INFORMATION

Year	2024	2023	2022
Land Value	$360,000	$281,250	$225,000
Building Value	$134,628	$160,587	$144,899
Extra Feature Value	$2,359	$2,388	$2,418
Market Value	$496,987	$444,225	$372,317
Assessed Value	$457,551	$444,225	$372,317

BENEFITS INFORMATION

Benefit	Type	2024	2023	2022
Save Our Homes Cap	Assessment Reduction	$39,436		
Homestead	Exemption	$25,000	$25,000	
Second Homestead	Exemption	$25,000	$25,000	

Note: Not all benefits are applicable to all Taxable Values (i.e. County, School Board, City, Regional).

SHORT LEGAL DESCRIPTION

CINEMA PARK-COUNTRY CLUB ESTS
ADDN
PB 17-2
SELY 1/2 LOTS 1 & 2 BLK 58
LOT SIZE 100.000 X 75

TAXABLE VALUE INFORMATION

Year	2024	2023	2022
COUNTY			
Exemption Value	$50,000	$50,000	$0
Taxable Value	$407,551	$394,225	$372,317
SCHOOL BOARD			
Exemption Value	$25,000	$25,000	$0
Taxable Value	$432,551	$419,225	$372,317
CITY			
Exemption Value	$50,000	$50,000	$0
Taxable Value	$407,551	$394,225	$372,317
REGIONAL			
Exemption Value	$50,000	$50,000	$0
Taxable Value	$407,551	$394,225	$372,317

SALES INFORMATION

Previous Sale	Price	OR Book-Page	Qualification Description
08/02/2021	$410,000	32687-0704	Qual by exam of deed
09/18/2020	$100	32182-3861	Corrective, tax or QCD; min consideration
06/18/2020	$100	31992-2776	Trustees in bankruptcy, executors or guardians
12/01/1986	$60,000	13114-2660	Sales which are qualified

The Property Appraiser is continually editing and updating the tax roll. This website may not reflect the most current information on record. The Property Appraiser and Miami-Dade County assumes no liability, see full disclaimer and User Agreement at http://www.miamidade.gov/info/disclaimer.asp

Exhibit B

Subject Platted Lots in 1947


57
58
8
7
6
5
4
3
50
"
"
"
50
64.0
18.3
126.8
134
60
150
1
2
67
150
67
50
50
"
50
134.4
17
18
19
20
205.1
150
0.4
49.7
150
1
2
3
150
4
5
6
7
8
9
10
51.25
73.2
32.9
27.5
19.6
173.9
66.1
227.3
251.7
66.1
208.6
165.35
128.3
108.0
18.3
67.5
85
40

Exhibit C

1984 City Building Official Letter

City of MIAMI SPRINGS Florida

BUILDING AND ZONING DEPARTMENT
201 WESTWARD DRIVE
MIAMI SPRINGS, FL 33166

TELEPHONE
(305) 885-4581

20 June 1984

Mr. Thomas W. Jackson
200 N. Esplanade Drive
Miami Springs, FL 33166

Dear Mr. Jackson:

In compliance with your request, this letter is to advise you of the City's requirements should the owner of the 100' x 150' lot located at 200 Esplanade Drive wish to subdivide the lot into two 75'x100' lots.

1. First, the owner of the subject property should submit a letter to this department requesting the City's approval to subdivide the lot into two 75' x 100' parcels. If the owner intends to apply for a building permit for the subdivided property, the letter should state this intention.

2. Along with the letter, there should be a copy of a current survey showing the location of all improvements on the property. The improvements should be restricted to a 75' x 100' portion of the overall platted lot of record and must not encroach upon the 75' x 100' portion for which the owner intends to apply for a building permit. Furthermore, the existing improvements must comply with all setback requirements. In this case, the house which is presently situated on the lot and facing 200 N. Esplanade Drive must:

a) Be located on a 75' x 100' lot.

b) Have minimum setbacks: front yard setback of 30'; rear yard setback of 25'; 15' setback on the side of the house facing Falcon Avenue, and a 10' setback on the south side of the house.

No building permit can be issued for the remaining 75' x 100' portion of the platted lot until all encroachments into the above described setback areas have been removed.

3. The owner should provide a survey showing the proposed locations of water, sewer, electric, telephone, gas and television cable. The ap-

To: Thomas W. Jackson

Re: 200 N. Esplanade Drive

propriate utility agencies must approve the locations and relocations of all utilities.

4. A "Waiver of Plat" must be prepared for the City Manager's signature.

5. The owner must pay the cost of extending sewer lateral to the property line.

6. The owner must also pay the cost of a sewer assessment which is required by Chapter 50, Section 50.20 of the City Code. This section is attached hereto for your reference.

Yours truly,

Dave Wells
Building Official

DW/jd
Attch.

cc: City Manager

Exhibit D

Addition Site Plan Showing Unapproved Rear Yard Setback

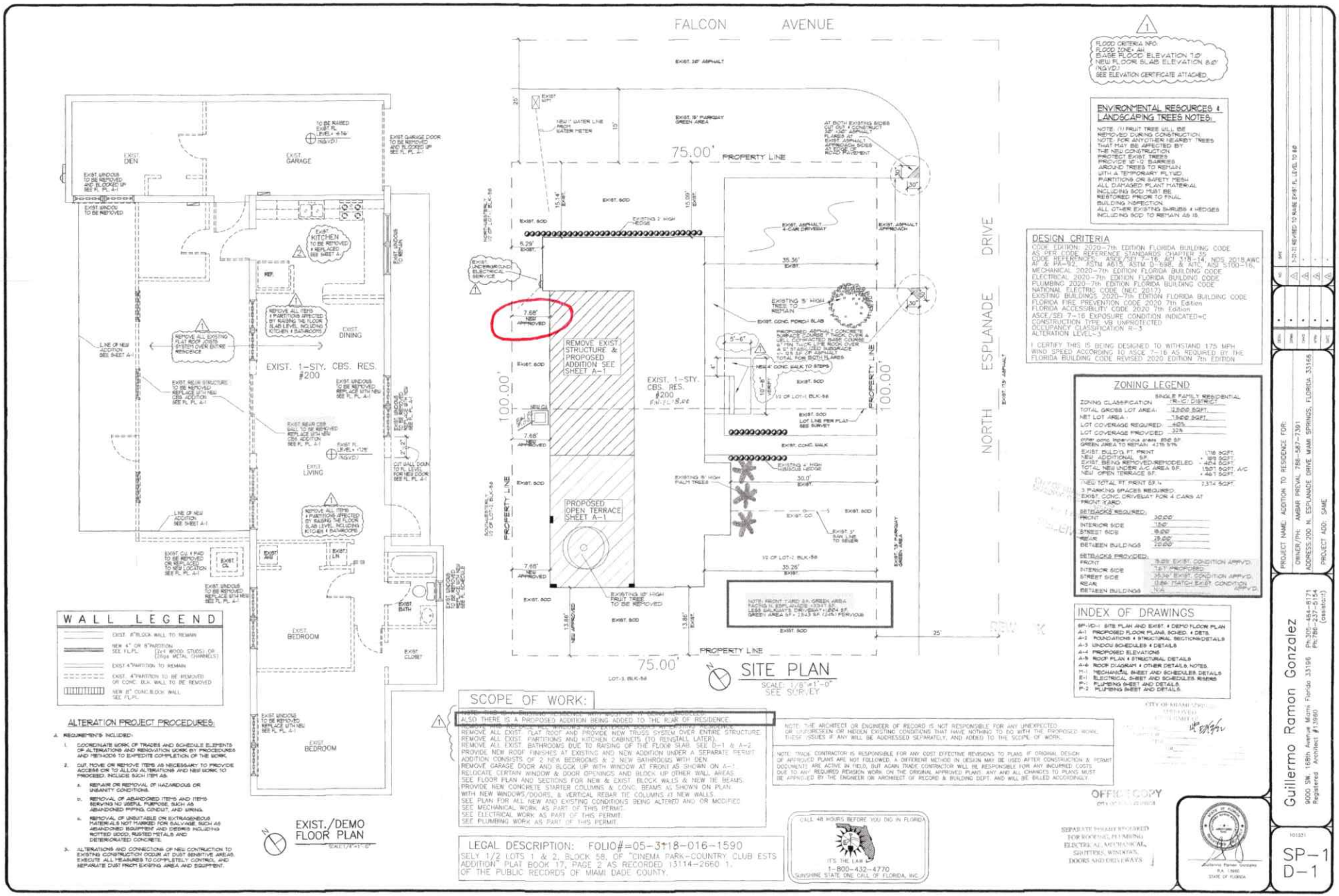
FALCON AVENUE
NORTH ESPLANADE DRIVE
75.00' PROPERTY LINE
100.00'
EXIST. 1-STY. CBS. RES. #200
REMOVE EXIST. STRUCTURE & PROPOSED ADDITION SEE SHEET A-1
PROPOSED OPEN TERRACE SHEET A-1
EXIST. 1-STY. CBS. RES. #200
SITE PLAN
SCALE: 1/8"=1'-0"
SEE SURVEY
EXIST. 1-STY. CBS. RES. #200
EXIST. DEN
EXIST. GARAGE
EXIST. KITCHEN
EXIST. DINING
EXIST. LIVING
EXIST. BEDROOM
EXIST. BEDROOM
EXIST. CLOSET
EXIST. BATH
EXIST. /DEMO FLOOR PLAN
SCALE: 1/4"=1'-0"
WALL LEGEND
EXIST. 8" BLOCK WALL TO REMAIN
NEW 4" OR 8" PARTITION SEE FL.PL.
EXIST. 4" PARTITION TO REMAIN
EXIST. 4" PARTITION TO BE REMOVED OR CONC. BLK. WALL TO BE REMOVED
NEW 8" CONC. BLOCK WALL SEE FL.PL.
ALTERATION PROJECT PROCEDURES:
A. REQUIREMENTS INCLUDED:
1. COORDINATE WORK OF TRADES AND SCHEDULE ELEMENTS OF ALTERATIONS AND RENOVATION WORK BY PROCEDURES AND METHODS TO EXPEDITE COMPLETION OF THE WORK.
2. CUT, MOVE OR REMOVE ITEMS AS NECESSARY TO PROVIDE ACCESS OR TO ALLOW ALTERATIONS AND NEW WORK TO PROCEED. INCLUDE SUCH ITEM AS:
a. REPAIR OR REMOVAL OF HAZARDOUS OR UNSANITY CONDITIONS.
b. REMOVAL OF ABANDONED ITEMS AND ITEMS SERVING NO USEFUL PURPOSE, SUCH AS ABANDONED PIPING, CONDUIT, AND WIRING.
c. REMOVAL OF UNSUITABLE OR EXTRANEOUS MATERIALS NOT MARKED FOR SALVAGE, SUCH AS ABANDONED EQUIPMENT AND DEBRIS INCLUDING ROTTED WOOD, RUSTED METALS AND DETERIORATED CONCRETE.
3. ALTERATIONS AND CONNECTIONS OF NEW CONSTRUCTION TO EXISTING CONSTRUCTION OCCUR AT DUST SENSITIVE AREAS, EXECUTE ALL MEASURES TO COMPLETELY CONTROL AND SEPARATE DUST FROM EXISTING AREA AND EQUIPMENT.
SCOPE OF WORK:
ALSO THERE IS A PROPOSED ADDITION BEING ADDED TO THE REAR OF RESIDENCE.
REMOVE ALL EXIST. FLAT ROOF AND PROVIDE NEW TRUSS SYSTEM OVER ENTIRE STRUCTURE.
REMOVE ALL EXIST. PARTITIONS AND KITCHEN CABINETS. (TO REINSTALL LATER).
REMOVE ALL EXIST. BATHROOMS DUE TO RAISING OF THE FLOOR SLAB. SEE D-1 & A-2.
PROVIDE NEW ROOF FINISHES AT EXISTING AND NEW ADDITION UNDER A SEPARATE PERMIT.
ADDITION CONSISTS OF 2 NEW BEDROOMS & 2 NEW BATHROOMS WITH DEN.
REMOVE GARAGE DOOR AND BLOCK UP WITH WINDOW AT FRONT AS SHOWN ON A-1.
RELOCATE CERTAIN WINDOW & DOOR OPENINGS AND BLOCK UP OTHER WALL AREAS.
SEE FLOOR PLAN AND SECTIONS FOR NEW & EXIST. BLOCK WALLS & NEW TIE BEAMS.
PROVIDE NEW CONCRETE STARTER COLUMNS & CONC. BEAMS AS SHOWN ON PLAN.
WITH NEW WINDOWS/DOORS, & VERTICAL REBAR TIE COLUMNS AT NEW WALLS.
SEE PLAN FOR ALL NEW AND EXISTING CONDITIONS BEING ALTERED AND OR MODIFIED.
SEE MECHANICAL WORK AS PART OF THIS PERMIT.
SEE ELECTRICAL WORK AS PART OF THIS PERMIT.
SEE PLUMBING WORK AS PART OF THIS PERMIT.
LEGAL DESCRIPTION: FOLIO#=05-3118-016-1590
SELY 1/2 LOTS 1 & 2, BLOCK 58, OF "CINEMA PARK-COUNTRY CLUB ESTS ADDITION" PLAT BOOK 17, PAGE 2 AS RECORDED 13114-2660 1, OF THE PUBLIC RECORDS OF MIAMI DADE COUNTY.
CALL 48 HOURS BEFORE YOU DIG IN FLORIDA
IT'S THE LAW
1-800-432-4770
SUNSHINE STATE ONE CALL OF FLORIDA, INC.
FLOOD CRITERIA NFO:
FLOOD ZONE= AH
BASE FLOOD ELEVATION 7.0'
NEW FLOOR SLAB ELEVATION 8.0' (NGVD')
SEE ELEVATION CERTIFICATE ATTACHED
ENVIRONMENTAL RESOURCES & LANDSCAPING TREES NOTES:
NOTE: (1) FRUIT TREE WILL BE REMOVED DURING CONSTRUCTION.
NOTE: FOR ANY OTHER NEARBY TREES THAT MAY BE AFFECTED BY THE NEW CONSTRUCTION
PROTECT EXIST. TREES
PROVIDE 10'-0' BARRIER AROUND TREES TO REMAIN WITH A TEMPORARY PLYWD. PARTITIONS OR SAFETY MESH
ALL DAMAGED PLANT MATERIAL INCLUDING SOD MUST BE RESTORED PRIOR TO FINAL BUILDING INSPECTION.
ALL OTHER EXISTING SHRUBS & HEDGES INCLUDING SOD TO REMAIN AS IS.
DESIGN CRITERIA
CODE EDITION: 2020-7th EDITION FLORIDA BUILDING CODE AS PER CODE REFERENCE STANDARDS CHAPTER 35
CODE REFERENCES: ASCE/SEI 7-16, ACI 318-14, NDS 2018 AWC
AF & PA-12, TSTM A615, ASTM D-638, & AITC, ASD 1-2100-16,
MECHANICAL 2020-7th EDITION FLORIDA BUILDING CODE
ELECTRICAL 2020-7th EDITION FLORIDA BUILDING CODE
PLUMBING 2020-7th EDITION FLORIDA BUILDING CODE
NATIONAL ELECTRIC CODE (NEC 2017)
EXISTING BUILDINGS 2020-7th EDITION FLORIDA BUILDING CODE
FLORIDA FIRE PREVENTION CODE 2020 7th Edition
FLORIDA ACCESSIBILITY CODE 2020 7th Edition
ASCE/SEI 7-16 EXPOSURE CONDITION INDICATED=C
CONSTRUCTION TYPE VB UNPROTECTED
OCCUPANCY CLASSIFICATION R-3
ALTERATION LEVEL-3
I CERTIFY THIS IS BEING DESIGNED TO WITHSTAND 175 MPH WIND SPEED ACCORDING TO ASCE 7-16 AS REQUIRED BY THE FLORIDA BUILDING CODE REVISED 2020 EDITION 7th EDITION
ZONING LEGEND
SINGLE FAMILY RESIDENTIAL (RS-1C) DISTRICT
ZONING CLASSIFICATION
TOTAL GROSS LOT AREA: 12,500 SQFT.
NET LOT AREA 7,500 SQFT.
LOT COVERAGE REQUIRED: 40%
LOT COVERAGE PROVIDED 32%
EXIST. BUILDG. FT. PRINT 1,116 SQFT.
NEW ADDITIONAL S.F. 1,258 SQFT.
EXIST. BEING REMOVED/REMODELED S.F. 404 SQFT.
TOTAL NEW UNDER A/C AREA S.F. 1,501 SQFT. A/C
NEW OPEN TERRACE S.F. 461 SQFT.
NEW TOTAL FT. PRINT S.F. % 2,374 SQFT.
3 PARKING SPACES REQUIRED:
EXIST. CONC. DRIVEWAY FOR 4 CARS AT FRONT X/NC.
SETBACKS REQUIRED:
FRONT 30.00'
INTERIOR SIDE 7.50'
STREET SIDE 15.00'
REAR 25.00'
BETWEEN BUILDINGS 10.00'
SETBACKS PROVIDED:
FRONT 9.29' EXIST. CONDITION APPV'D.
INTERIOR SIDE 7.51' PROPOSED
STREET SIDE 35.36' EXIST. CONDITION APPV'D.
REAR 0.84' MATCH EXIST. CONDITION APPV'D.
BETWEEN BUILDINGS N/A
INDEX OF DRAWINGS
SP-VD-1 SITE PLAN AND EXIST. & DEMO FLOOR PLAN
A-1 PROPOSED FLOOR PLANS, SCHED. & DETS.
A-2 FOUNDATIONS & STRUCTURAL SECTIONS/DETAILS
A-3 WINDOW SCHEDULES & DETAILS
A-4 PROPOSED ELEVATIONS
A-5 ROOF PLAN & STRUCTURAL DETAILS
A-6 ROOF DIAGRAM & OTHER DETAILS, NOTES.
M-1 MECHANICAL SHEET AND SCHEDULES, DETAILS
E-1 ELECTRICAL SHEET AND SCHEDULES, RISERS
P-1 PLUMBING SHEET AND DETAILS.
P-2 PLUMBING SHEET AND DETAILS.
NOTE: THE ARCHITECT OR ENGINEER OF RECORD IS NOT RESPONSIBLE FOR ANY UNEXPECTED OR UNFORESEEN OR HIDDEN EXISTING CONDITIONS THAT HAVE NOTHING TO DO WITH THE PROPOSED WORK. THESE ISSUES IF ANY WILL BE ADDRESSED SEPARATELY, AND ADDED TO THE SCOPE OF WORK.
NOTE: TRADE CONTRACTOR IS RESPONSIBLE FOR ANY COST EFFECTIVE REVISIONS TO PLANS IF ORIGINAL DESIGN OF APPROVED PLANS ARE NOT FOLLOWED. A DIFFERENT METHOD IN DESIGN MAY BE USED AFTER CONSTRUCTION & PERMIT DOCUMENTS ARE ACTIVE IN FIELD, BUT AGAIN TRADE CONTRACTOR WILL BE RESPONSIBLE FOR ANY INCURRED COSTS DUE TO ANY REQUIRED REVISION WORK ON THE ORIGINAL APPROVED PLANS. ANY AND ALL CHANGES TO PLANS MUST BE APPROVED BY THE ENGINEER OR ARCHITECT OF RECORD & BUILDING DEPT. AND WILL BE BILLED ACCORDINGLY.
OFFICE COPY
SEPARATE PERMIT REQUIRED FOR ROOFING, PLUMBING, ELECTRICAL, MECHANICAL, SHUTTERS, WINDOWS, DOORS AND DRIVEWAYS
PROJECT NAME: ADDITION TO RESIDENCE FOR:
OWNER/PH#: AMBAR PREVAL 786-587-7391
ADDRESS: 200 N. ESPLANADE DRIVE MIAMI SPRINGS, FLORIDA 33166
PROJECT ADD: SAME
Guillermo Ramon Gonzalez
9000 SW. 168th Avenue Miami Florida 33196 Ph:305-484-8171
Registered Architect #13960 Ph:786-237-5154 (assistant)
SP-1
D-1

Henry Iler & Iler Planning Profile

ILER PLANING — PRINCIPAL

Henry B. Iler, AICP

President, Principal-in-Charge



Iler is a nationally-recognized expert planner with over 30 years of regional and community planning experience. Following 14 years of public sector planning experience, he entered private consulting in 1993 as Planning Services Director with Duncan Associates (DA). After completing a number of comprehensive planning and zoning projects in Florida for DA, he formed Iler Planning Group (Iler Planning) in 1996. Iler Planning has grown to be Florida's most notable sole planning firm. His vision was to create a firm focused on innovation and implementation, specializing in all elements of urban and community planning, primarily for cities and counties. Iler Planning has achieved that vision and continues to strive to improve and excel.

Under his leadership, the company has completed a large number of successful community plans and projects, including:

- Doral "Green" Master Plan
- North Bay Village Urban Form Study
- Palm Beach County Economic Development Policy Plan
- Deerfield Beach CRA Master Plan
- Lake Worth Strategic Master Plan
- Boynton Beach 20/20 Downtown Master Plan
- Oakland Park Neighborhood Plan
- Doral Land Development Code
- Miami Lakes Comprehensive Plan
- Naples Downtown CRA Plan Update
- Sebastian EAR-based Comprehensive Plan Amendments
- Florida City Development Review Process / Annexations

Recently, he has developed a unique, comprehensive planning approach for communities who want to "go green." Too many local green initiatives are incremental and disjointed, and address only small impacts on a community's total carbon footprint. In 2007, Iler developed the "Green Master Plan" concept to address all greenhouse gas and heat generators within a community. It starts with reducing vehicle miles of travel (top carbon generator) and develops detailed implementation strategies for 10 guiding principles of carbon/heat reduction and resource conservation. Iler Planning is currently preparing a Green Master Plan for the new City of Doral, located immediately west of Miami. His innovative GMP approach was recently showcased at the FAPA Conference in Miami; the slide show Iler presented is found on our website [www.ipgplan.com].

Iler is also a legally-recognized expert in comprehensive planning, land use compatibility, community redevelopment and land development codes. He has qualified as a "planning expert" in a number of public hearings, admin-

EXPERIENCE HIGHLIGHTS

- Over 30 years of experience with regional and community planning.
- 14 years of public sector planning experience.

EDUCATION

- Master of Science in Urban & Regional Planning, Environmental Specialization Florida State University, 1976
- Bachelor of Business Administration & Accounting University of Florida, 1973

PROFESSIONAL CERTIFICATIONS

- American Institute of Certified Planners (AICP)

PROFESSIONAL AFFILIATIONS

- American Planning Association
- Urban Land Institute

istrative hearings and legal cases. His most notable case occurred in Martin County where he represented the Pinecrest Lakes Homeowners Association versus Martin County and a local developer. The judge, based on Iler's testimony, found that the developer's apartment development was incompatible with the County's Comprehensive Plan and the established large lot neighborhood adjacent, and ordered the project halted and modified in mid-construction. The verdict was upheld at the 4th DCA and Florida Supreme Court. Other clients who have retained his expert services include:

- United Nursery
- Home Depot
- Sierra Club
- Hammock Reserve HOA
- Service Employees International Union
- Continental Park HOA

Most recently, Iler assisted the Viscaya Museum, Grove Isle and adjacent homeowners in north Coconut Grove (Miami) win recent DOAH and judicial hearing victories to reverse a City Commission land use amendment approval for a 25-story condo project next door. As a planning expert, Iler seeks to represent citizens, cities and counties who are looking to ensure planned development projects are consistent with local comprehensive plans and codes. He accepts private sector expert work as well when the project is clearly consistent with a community's vision.

Iler has published planning articles and gives frequent workshops on comprehensive and neighborhood planning, downtown redevelopment and "green" master planning. He recently presented a workshop at the Florida Planning Association Conference in Miami on Green Master Planning. He co-authored an article in the national Planning Magazine entitled "Saving the East Everglades," which presented a blueprint for changing land uses and land conservation practices to prevent destruction of the Everglades resource and was eventually implemented by Miami-Dade County. He continues to give numerous presentations on Comprehensive Planning, Community Redevelopment and Neighborhood Planning.

Prior to 1989, his public sector career spanned 14 years. He spent 2 years as a Regional Planner with the Southwest Florida Regional Planning Council, then accepted a Senior Planner position with Miami-Dade County (MDC) where he worked on the East Everglades Resources Planning Project. In 1983, he was promoted to Principal Planner with the Miami-Dade Transportation Administration, as Metro-Rail was being completed and he helped finish a number of rail station area development plans. In 1985, he became Assistant Large-Scale Development Impact Coordinator with MDC, where among many large projects, he directed the County's review of the Dolphin (Joe Robbie) Stadium Development of Regional Impact Project.

In 1989, Iler was selected as Martin County Growth Management Director, where he oversaw the completion of the County's awarding-winning Growth Management Plan. While at Martin County, he directed 25 employees and managed the long-range planning, zoning, development review, environmental regulation and code enforcement sections of the GM Department.

He is currently working to refine his "green" master planning concepts to focus strongly on the considerable short and long-term budget savings to local governments as various green strategies are implemented.



Iler Planning's Performance and Accomplishments

Iler Planning's expertise in comprehensive planning and land development code projects extends to many communities in Florida as detailed in this section, including Doral, Titusville, Miami Lakes, Cape Coral and Deerfield Beach. Iler Planning understands the needs of its client and offers the following advantages:

- Fourteen years of proven capability engaging community leaders, residents and business owners in successful charrettes, hearings and workshops;
- Unmatched knowledge of specific state, county, and local development codes and processes;
- An established reputation backed by a long list of clients consistently expressing satisfaction in our work;
- A company at the forefront of integrating web-based technologies into the field of planning;
- Commitment to environmental planning and "green" principles; and,
- A company that remains free of conflicts by working 90% in the public sector.

Community Planning

Preparing a Comprehensive, Strategic, or Master Plan for any community requires a talented team with multi-disciplinary expertise and experience in land use planning, urban design, transportation, economics and demographics, land use regulations and implementation strategies, and public involvement techniques. Iler Planning has extensive experience assisting a diverse range of communities throughout Florida in the preparation of feasible, successful, and innovative plans.

All communities are different; as such, not all plans are the same. Iler Planning's planning strategies vary as widely as the types of communities and the issues that they face. Iler Planning's vast knowledge of all facets of land-use planning provides clients with the most experienced professionals available for developing these important plans.

Iler Planning's approach to planning and urban design is simple. Iler Planning works corroboratively with its clients and the community to integrate the principles of sound planning, creative design, and public involvement in its plans. Combined with years of experience and unique expertise, this approach enables Iler Planning to achieve feasible solutions and effective planning.

Green Planning

Energy conservation and the protection of environmental resources are vital issues in today's changing world. Green design and carbon neutrality are becoming important components of sustainable planning in many cutting-edge communities. Iler Planning's approach incorporates Green Design and Carbon Neutral strategies into its master and redevelopment planning. Iler Planning develops the objectives, policies, and regulations needed to make a city a leader in the area of high quality, "green" and "carbon neutral" development.

Environmental Protection and Open Space

As urban areas expand, communities need to preserve open lands and environmentally sensitive areas, and mitigate environmental problems related to development. Iler Planning has developed land preservation

strategies and "green" plans for many communities and municipalities throughout Florida.

Growth Management

Leaders of progressive communities understand that growth carries great opportunities and grave risks. Growth can bring a city more revenue, added job opportunities, and a diversity of residents. However, if growth is not managed thoughtfully, incredible financial burdens on a city's budget may occur. Iler Planning has worked with numerous communities to identify the effects of growth and to write plans and regulations to minimize negative impacts and proactively prepare for the future.

Urban Design

Iler Planning's creative design process has resulted in the development of innovative urban and populated spaces, providing each area with impressive and functional design elements. Iler Planning's approach to urban design focuses on providing walkable, pedestrian-oriented environments that make the best use of space. Iler Planning is involved in all scales of projects, including architectural design guidelines, facade improvement programs, as well as downtown and main street improvement projects.

Zoning and Land Development Regulations

To revise existing regulations or to develop new ones, a community must draw on the experience of a firm that can assemble information into a creative and sound legal document. Iler Planning provides the full range of expertise needed to build effective and feasible regulations. Since the firm was founded in 1995, Iler Planning has written plans and drafted ordinances and regulations for dozens of communities throughout Florida.

Charrettes and Community Visioning

The Iler Planning charrette process combines creative, intense work sessions with public workshops and design studio open houses. The charrette itself, usually lasting four to seven days, is a series of meetings and design sessions that would normally take weeks or months to complete. The rapid pace encourages participants to abandon usual working patterns and think outside the box. Based upon public visioning during a charrette, Iler Planning reviews, critiques, and refines design ideas and then presents them to the community. The open review process quickly builds trust in the community and fosters a real understanding of the unique situations faced. Iler Planning's focus on feasibility brings a level of seriousness and rigor to the process for all participants.

Branding and Marketing Services

Iler Planning offers complete branding and marketing services for planning events, charrettes, workshops, and municipal projects; with services ranging from logo and website design to slogan development and event branding. Iler Planning's interactive websites serve to promote events as well as facilitate the exchange of ideas within a community. Forums and chat rooms are excellent ways to keep residents involved in a project and encourage them to contribute in a valuable, productive way.

FIRM HISTORY

Headquartered in Jupiter, Florida, Iler Planning is a nationally-recognized firm providing innovative comprehensive planning, community participation and redevelopment services throughout Florida. The founder, Henry Iler, AICP, has over 30 years of planning experience in South Florida. Born in Tupelo, Mississippi, and raised in Greensboro, North Carolina, he came to Florida in 1969 as a freshman at the University of Florida and became a permanent resident after graduating in Business and Accounting. Soon after he received his Masters Degree in Urban and Environmental Planning from FSU. Following 12 years of public sector planning experience in Miami-Dade County and as Growth Management Director of Martin County, Mr. Iler established the firm in 1994. Since then, Iler Planning has grown to become one of the largest sole planning firms in Florida.

From the start, our mission has reflected its founder's earliest vision for his planning work: to use creative and sound urban planning expertise to help improve communities and the lives of their residents. Consistent with this mission, the firm has always taken the side of supporting local community planning, many times in opposition to development interests. Our historical client mix is 90% public sector and 10% private sector. Mr. Iler is often called upon as an expert witness in land use cases, and in all except a few, has been retained either by local governments or homeowner groups fighting a development project inconsistent with the community's comprehensive plan. Last year, he helped the Viscaya Museum and adjacent single-family neighborhoods in Miami defeat a high-rise condo development which was contrary to the Miami Comprehensive Plan.

The firm is organized around the core concept of retaining the best urban planning talent available in house, while building an extensive network of highly-capable subcontractors in fields like urban design, landscape architecture and engineering. Many firms in the planning field are engineering real estate or design companies that also have some urban planners, relegating their planners to a second class role. IP puts sound comprehensive planning at the forefront of community improvement and assigns other technical specialists to perform their work at the appropriate point in the planning process. This concept has worked time and time again for our clients.

The first projects completed by the firm involved a number of local comprehensive plans for South Florida communities that were doing the initial revisions to the very first comprehensive plan they had ever prepared as a requirement of the 1985 State Comprehensive Planning law. The firm had a chance to evaluate how these communities had fared in implementing the goals, objectives and policies of those early plans, and make "course corrections" in the plan updates that reflected the changing nature of those rapidly-growing South Florida cities in the 1990s. The firm also prepared and/or revised a number of Land Development Codes during this period to implement the comprehensive plans it was updating.

At the turn of the century, the firm won a number of projects involving community redevelopment. Working closely with, and in some cases assisting in establishing, Community Redevelopment Agencies (CRAs), the firm made a name for itself by helping a number of CRAs, including Deerfield Beach and Florida City. These cities have become 2 of the most successful CRAs in Florida based on tax base growth.

Since 2002, IP has returned to its core focus of comprehensive planning, completing a number of Evaluation and Appraisal Reports (EARs) and EAR-based Amendments for south Florida cities, as well as, comprehensive plans for several new cities. These clients include Titusville, Cape Coral, Miami Lakes, Doral and Homestead. During this time, we also honed our public involvement skills, developing and executing an extensive, year long community participation program that served as the basis for development of the Lake Worth Strategic Master Plan. Another exciting project was the City of North Bay Village Charrette Master Plan, where our planning and design professionals used 3-D modeling, real time design, and good-old-fashion listening, to help 50-70 residents over 3-days develop a completely new vision for their waterside city; they have been aggressively implementing it ever since

With its comprehensive planning experience, Iler Planning has developed a number of innovative ways to present comprehensive plans and amendments to residents that makes the sometimes mind-numbing planning process and its jargon, actually interesting and easy-to-understand. Our workshops use the latest in planning, audio-visual technology and interactive techniques to get people to our workshops and, make sure they feel comfortable and informed enough to freely contribute their ideas. We make sure they know we will use their ideas and appreciate the time they have given.

Consistent with its reputation for innovative planning, Iler Planning, in 2006, developed the Green Master Planning (GMP) concept in response to the growing trend of communities at that time and today to "go green" in reducing their carbon footprint and becoming more sustainable. IP recognized that these efforts were mostly piecemeal and did little to actually increase community sustainability. GMP takes a comprehensive approach in identifying all of the ways a community can reduce carbon emissions, conserve resources and become truly sustainable. Then a strategic implementation program is developed to put "real green" into practice throughout the community starting with the local government itself. The Doral Green Master Plan was one of our first and the City is now well into implementation with IP assistance, which involves, among many other actions, tracking carbon reductions and the substantial cost savings to the City budget. In keeping with its commitment to sustainability, IP became a carbon-neutral company in 2007, completely offsetting its carbon emissions in partnership with the CarbonFund.



Iler Planning continues to innovate and improve the variety of services available to clients. It has not waivered from its initial mission to improve communities. We firmly believe that a comprehensive approach to enhancement of our cities and counties is the most rational and cost-effective approach, and the one that provides the best opportunity to attain a community's vision.



Philosophy

Leaders of progressive communities understand that growth carries great opportunities and grave risks. Growth can bring a city more revenue, added job opportunities, and diversity. However, if growth is not managed thoughtfully, incredible financial burdens on a city's budget may occur. Iler Planning has worked with numerous communities to identify the effects of growth and to write plans to minimize negative impacts and prepare for the future.



Comprehensive Plan (First) — Doral

Iler Planning, in association with Kimley-Horn & Associates, completed the first City of Doral Comprehensive Plan that captured the latest planning innovations such as mixed use and high quality development standards. The City, always known for a thriving office and light industrial market, now also has a rapidly expanding residential sector. In response to the growing population and the need to reduce vehicle trips, the Future Land Use Map converted significant areas of industrial property to mixed use in and around the downtown core. Doral was incorporated in 2003, and is since gaining recognition as one of the most visionary and vibrant communities in southeast Florida. It was recently ranked by CNN Money 51st on a list of the top 100 cities with the best mix of business advantages and lifestyle appeal.

References: Mr. Nathan M. Kogon, AICP; Planning and Zoning Director; City of Doral; 8300 NW 53rd Street, Suite 100; Doral, FL 33166; (305) 593-6725; and, Hon. Juan Carlos Bermudez; Mayor; City of Doral; 8300 NW 53rd Street, Suite 100; Doral, FL 33166; (305) 593-6725.

Comprehensive Plan (First) — Palmetto Bay

Iler Planning, in association with Kimley-Horn & Associates, completed the first Village of Palmetto Bay Comprehensive Plan and land development code. The comprehensive plan focused on retaining a "small town" feeling, enhancing community identity, and maintaining parks and open space.

Reference: Hon. Eugene P. Flinn, Jr.; Mayor; Village of Palmetto Bay; 8950 SW 152nd Street; Palmetto Bay, FL 33157.





Philosophy

All communities are different; as such, not all plans are the same. Iler Planning's planning strategies vary as widely as the types of communities and the issues that they face. Iler Planning's vast knowledge of all facets of land-use planning provides clients with the most experienced professionals available for developing these important plans.

EVALUATION & APPRAISAL REPORTS

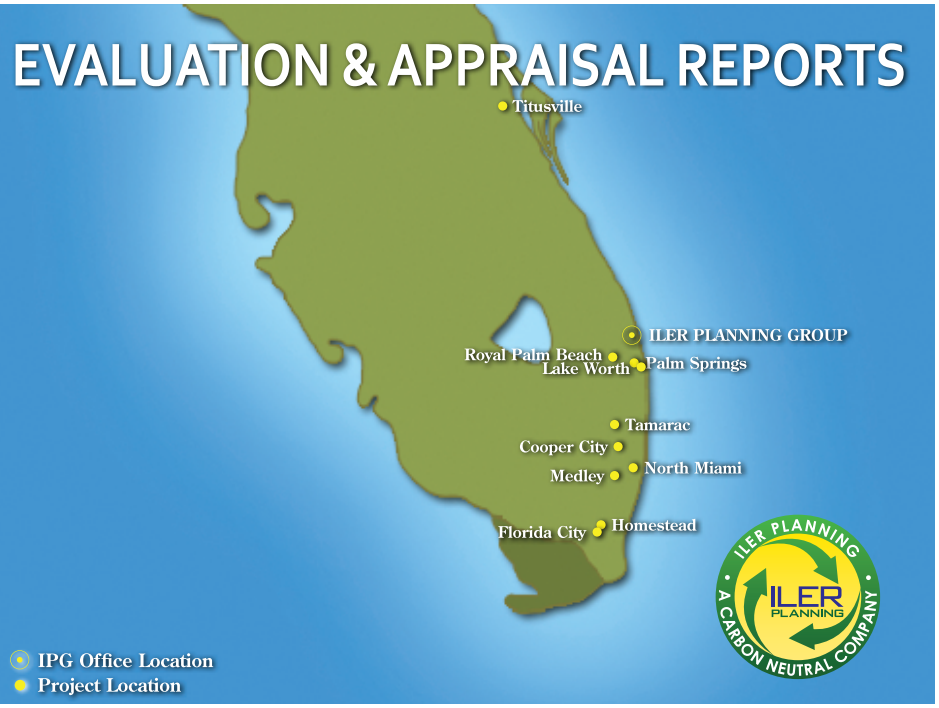

Evaluation and Appraisal Report — Titusville

Iler Planning worked with the City of Titusville in the preparation of their Evaluation and Appraisal Report (EAR). This process included a series of community workshops aimed at building consensus and uniting residents with a shared vision for the future of Titusville. Iler Planning successfully provided a full branding campaign for the visioning events, including a website, postcards, and logo.

Reference: Ms. Courtney Harris; Planning and Growth Management Director; City of Titusville; 555 South Washington Avenue; Titusville FL 32796-3584; (321) 383-5824.

Evaluation and Appraisal Report — Tamarac

Iler Planning prepared the EAR and the EAR-based Comprehensive Plan amendments for Tamarac, a suburban community located in northern Broward County. Copies of the final EAR document were requested by the FDCA and SFRPC to use as an example of an exemplary EAR document. The Plan amendments were completed in 13 months and within budget.

Reference: Mr. Jeff Miller; City Manager; City of Tamarac; 7525 NW 88th Avenue; Tamarac, FL 33321; (954) 597-3510.

Evaluation and Appraisal Report — Florida City

Iler Planning completed the EAR for Florida City, a fast-growing rural community in southern Miami-Dade County. A city-wide neighborhood assessment was performed as part of this project along with a financial program to schedule the necessary improvements over the upcoming 10 years. Copies of the final document were requested by the FDCA and SFRPC to be used as an examples of an exemplary EAR document.

Reference: Hon. Otis T. Wallace; Mayor; City of Florida City; 404 West Palm Drive; Florida City, FL 33034; (305) 249-9729.

Evaluation and Appraisal Report – Florida City

Iler Planning completed the EAR for Florida City, a fast-growing rural community in southern Miami-Dade County. A citywide neighborhood assessment was performed as part of this project along with a financial program to schedule the necessary improvements over the upcoming 10 years. Copies of the final document were requested by the FDCA and SFRPC to be used as examples of an exemplary EAR document.

Reference: Hon. Otis T. Wallace; Mayor; City of Florida City; 404 West Palm Drive; Florida City, FL 33034; (305) 249-9729.

Philosophy

Iler Planning is a recognized firm providing planning, community visioning, and urban design services throughout Florida. Established in 1995, Iler Planning is one of the largest sole planning firms in South Florida headquartered in Jupiter. At the core of Iler Planning's success has been a dedication to feasible planning, providing plans that succeed; a desire to improve communities; and a commitment to protecting our planet and the environment.

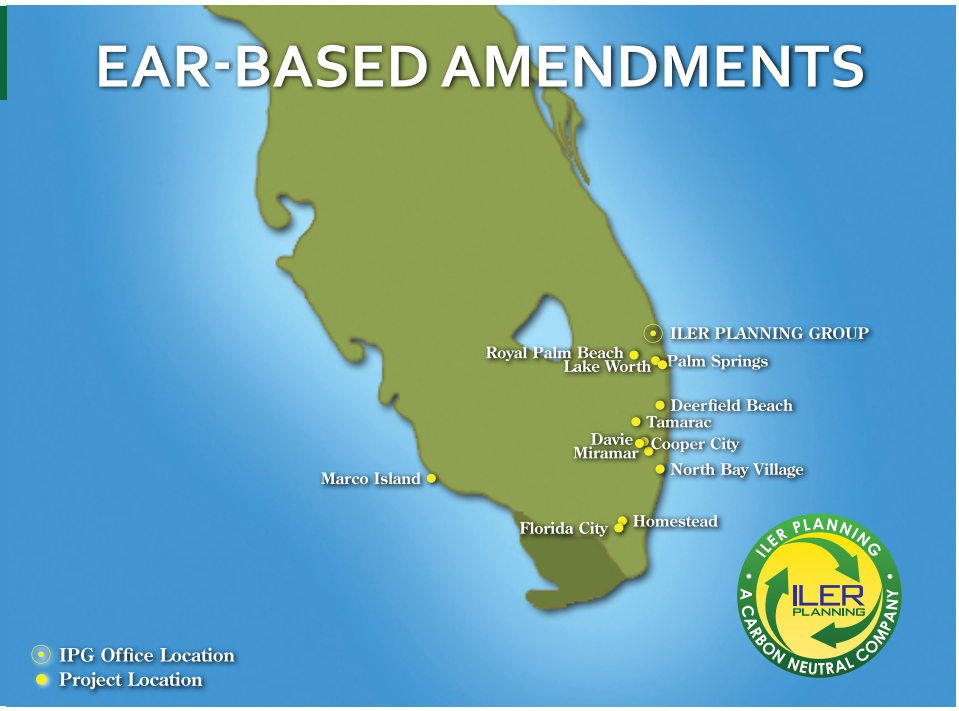

EAR-based Comprehensive Plan Amendments — Town of Davie

In addition to meeting all statute-required public hearings, Iler Planning conducted community workshops throughout the Town. These public workshops allowed residents and community stakeholders to address issues of direct interest to their neighborhoods.

Reference: Mr. David Quigley; Planning and Zoning Manager; Town of Davie; 6591 Orange Drive; Davie, FL 33314-3399; 954-797-1075.

EAR-based Comprehensive Plan Amendments — Florida City

Iler Planning completed the EAR-based amendments for the City of Florida City. These amendments incorporated mixed-use urban land uses into the Comprehensive Plan and brought the document into compliance with changes in state requirements. This project was completed in 12 months and within budget.

Reference: Hon. Otis T. Wallace; Mayor; City of Florida City; 404 West Palm Drive; Florida City, FL 33034; (305) 249-9729.

EAR-based Comprehensive Plan Amendments — Deerfield Beach

Iler Planning interviewed staff, public officials and community leaders to ascertain their view of the success and failure of the Plan's implementation. An independent assessment of the progress the City had made in achieving the goals, objectives and polices was also completed. Iler Planning included these interviews and assessments into the City's EAR-based Amendments.

Reference: Mr. Gerald Ferguson; Planning and Growth Management Manager; City of Deerfield Beach; 928 East Hillsboro Boulevard; Deerfield Beach, FL 33441; (954) 480-4222.

EAR-based Comprehensive Plan Amendments — Tamarac

Iler Planning successfully prepared the EAR and the EAR-based Comprehensive Plan amendments for this suburban community in Broward County. Copies of the final EAR document were requested by the FDCA and SFRPC to use as examples of proper EAR preparation. The Plan amendments were completed in 13 months and within budget.

Reference: Mr. Jeff Miller; City Manager; City of Tamarac; 7525 NW 88th Avenue; Tamarac, FL 33321; (954) 597-3510





Philosophy

To revise existing regulations or to develop new ones, a community must draw on the experience of a firm that can assemble information into a creative and sound legal document. Iler Planning provides the full range of expertise needed to build effective and feasible regulations. Since the firm was founded in 1995, Iler Planning has written plans and drafted ordinances and regulations for dozens of communities throughout Florida.



Land Development Code — Doral

In addition to developing the City's first comprehensive plan, Iler Planning in association with Kimley Horn, created the first land development code for the newly incorporated City of Doral. This graphic-oriented code focuses on incorporating smart growth principles such as density bonuses for mixed-use development and creative architectural excellence, and provisions for native vegetation and water conservation.

References: Mr. Nathan M. Kogon, AICP; Planning and Zoning Director; City of Doral; 8300 NW 53rd Street, Suite 100; Doral, FL 33166; (305) 593-6725.

Downtown Code — Oakland Park

Iler Planning drafted the land development regulations for the City of Oakland Park Downtown Mixed-Use District. These regulations stemmed from the City's Downtown Master Plan, also developed by Iler Planning. The new code contains design guidelines, compatible uses, parking solutions, and a building height incentive program for the City's downtown district.

Reference: Mr. Reagan Yarbrough; Director of Community Development; City of Oakland Park; 3650 NE 12th Avenue; Oakland Park, FL 33334; (954) 630-4344.

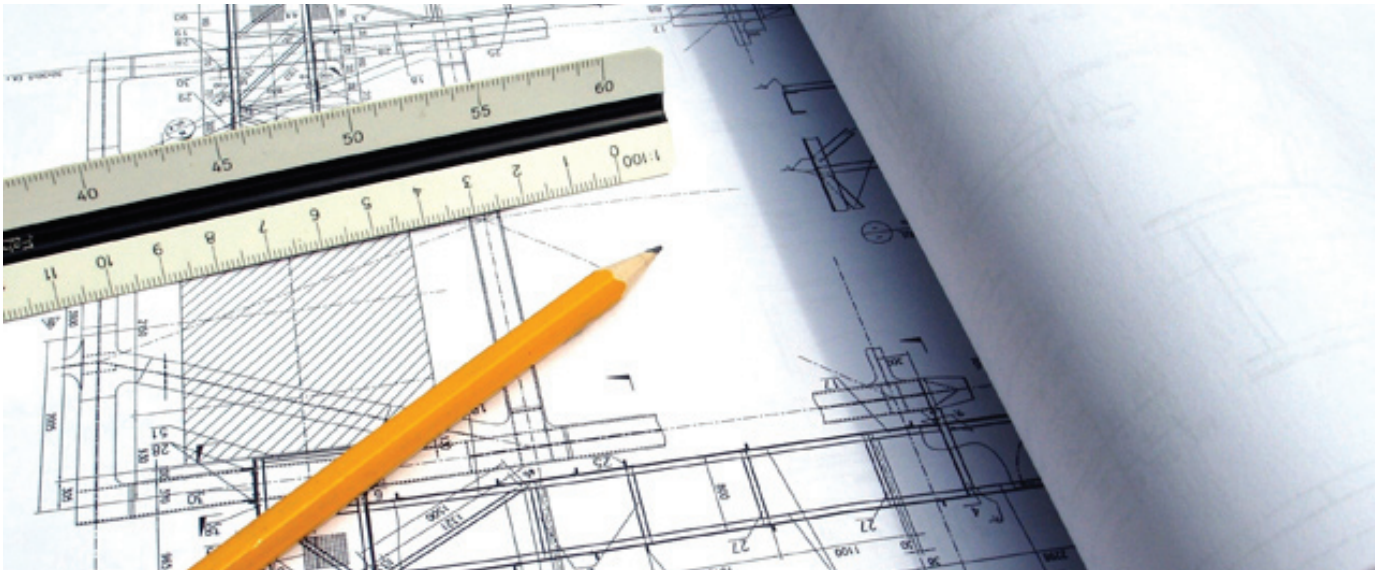

Philosophy

Preparing a Comprehensive, Strategic, or Master Plan for any community requires a talented team with multi-disciplinary expertise and experience in land use planning, urban design, transportation, economics and demographics, land use regulations and implementation strategies, and public involvement techniques. Iler Planning has experience assisting a range of communities in the preparation of feasible, successful, and innovative master plans.



Green Master Plan – Doral

Iler Planning is currently producing a Green Master Plan for the City of Doral. This comprehensive document will provide Doral with an individualized "green print" to guide development and internal practices within the City. The methodology used for this plan incorporates sustainability into the community vision and provides strategies and implementation programs that will result in substantial cost-savings to the City as well as its businesses and residents. Phase II of this plan will incorporate the recommendations of the Green Plan into the City's Land Development Regulations and Comprehensive Plan.

References: Mr. Nathan M. Kogon, AICP; Planning and Zoning Director; City of Doral; 8300 NW 53rd Street, Suite 100; Doral, FL 33166; (305) 593-6725; and, Hon. Juan Carlos Bermudez; Mayor; City of Doral; 8300 NW 53rd Street, Suite 100; Doral, FL 33166; (305) 593-6725.

Cove Master Plan Charrette – Deerfield Beach

Iler Planning held a week-long consensus building workshop which led to a new vision for the revitalization of the Deerfield Beach Cove/beach area. Using citizen input gathered during the charrette, Iler Planning outlined a multi-phase plan designed to unify the Cove/beach area with a cohesive urban design concept, land use and zoning strategy, enhanced pedestrian connections, public/private partnerships and innovative parking solutions. The City is now moving forward with the implementation of the first phase of this project.

Reference: Mr. Gerald Ferguson; Planning and Growth Management Manager; City of Deerfield Beach; 928 East Hillsboro Boulevard; Deerfield Beach, FL 33441; (954) 480-4222.

CRA Plan Update, City of Naples Community Redevelopment Agency (CRA)

Iler Planning is currently completing the 2008 Update of the City of Naples CRA Master Plans. The plan identifies relevant projects and programs from past redevelopment efforts that have not been realized because of the regulatory barriers and missed opportunities. The plan refines those projects and programs into a feasible master visioning document with an implementation program of high value, high leverage projects to guide redevelopment throughout the next 10 years.

Reference: Mr. Russell Adams; CRA Director; City of Naples; 735 8th Street South; Naples, FL 34102; (954) 597-3510.

Downtown Master Plan – Oakland Park

The City of Oakland Park envisioned a new Downtown along the Florida East Coast (FEC) railway corridor, located north of Oakland Park Boulevard. Using community workshops and urban design techniques, Iler Planning created a Downtown Master Plan to enable the City to create a local destination with a mix of uses, additional park and open space and greater pedestrian accessibility.

Reference: Mr. Reagan Yarbrough; Director of Community Development; City of Oakland Park; 3650 NE 12th Avenue; Oakland Park, FL 33334; (954) 630-4344.

Corridor Plan (Commercial Boulevard and University Drive) – Tamarac

Iler Planning was selected to perform the initial tasks of assessing the opportunities and constraints and recommending strategies to enhance Tamarac's primary commercial corridor. The plan analyzed current and future land

uses, the community's identity, transportation functionality, pedestrian ac cess, and the overall aesthetics of the corridor. Iler Planning identified strategies to enrich the area with better land use strategies and physical improvements. Strategies included: land use nodes, construction of a bike/pedestrian path, cross access easements to improve circulation, and new design guidelines.

Reference: Mr. Jeff Miller; City Manager; City of Tamarac; 7525 NW 88th Avenue; Tamarac, FL 33321; (954) 597-3510.



Henry Iler, AICP, is discussing a client project with his staff.

PERMIT NO: RES21-1143 ON-LINE PERMIT

MIAMI SPRINGS
201 Westward Drive Miami Springs, FL 33166

INSPECTION REQUEST LINE
(408) 555-1216
OR
SCHEDULE EXISTING INSPECTION ON-LINE
www.crw.com

PERMIT TYPE
BUILDING

PERMIT SUB-TYPE
ADDITION

JOB VALUE **0**

APN **05-3118-016-1590**

DESCRIPTION
ADDITION TO RESIDENCE AND OVERALL REMODELING TO EXIST RES.

APPLIED DATE
12/10/2021

APPROVED DATE
5/18/2022

ISSUED DATE
5/18/2022

Seal

PERMIT INFORMATION

SITE	200 ESPLANADE DRIVE MIAMI SPRINGS, FL 33166
APPLICANT	
OWNER	JOVANY JIMENEZ & AMBAR SARA PREVAL 200 N ESPLANADE DR MIAMI SPRINGS FL 33166
CONTRACTOR	

FEE SUMMARY

UPFRONT FEE	$125.00
ZONING REVIEW	$100.00
DCA AND DBPR AND CODE	$243.00
MISCELLANEOUS FEES	$100.00
SCANNING AND TECHNOLOGY	$727.00
STRUCTURAL REVIEW	$100.00
RESIDENTIAL BUILDING PERMIT FEE	$5,275.00
SCANNING AND TECHNOLOGY	$114.00
STRUCTURAL REVIEW	$100.00
MISCELLANEOUS FEES	$50.00
MISCELLANEOUS FEES	$50.00
MISCELLANEOUS FEES	$50.00
Total Fees Charged:	$7,034.00

NOTE: This job copy of this permit shall be kept on the job site to make the required entries thereon. The permit will expire if work is not started in 180 days, is abandoned, or does not receive an inspection for more than 180 days. Additional fees will be collected to renew expired permits. This is a Building Permit when properly filled out, signed and validated, and is not transferable. Construction Hour: Construction is limited to the hours of 7:00am to 7:00pm each day. No work shall be performed on certain holidays (MMC V-213-3(b)).

LICENSED CONTRACTORS DECLARATION

I hereby affirm under penalty of perjury that I am licensed under provisions of Chapter 9 (commencing with Section 7000) of Division 3 of the Business and Professions Code, and my license is in full force and effect.
License No: Expiration Date: Contractor:

OWNER-BUILDER DECLARATION

I hereby affirm under penalty of perjury that I am exempt from the contractors license Law for the following reason (Sec. 7031.5, Business and Professions Code: Any city or county which requires a permit to construct, alter, improve, demolish, or repair any structure, prior to its issuance, also requires the applicant for such permit to file a signed statement that he or she is licensed pursuant to the provisions of the Contractors License Law (Chapter 9 (commencing with Section 7000) of Division 3 of the Business and Pofessions Code) or that he or she is exempt therefrom and the basis for the alleged exemption. Any violation of Section 7031.5 by an applicant for a permit subjects the applicant to a civil penalty of not more than five hundred dollars ($500).):

_____ I, as owner of the property, or my employees with wages as their sole compensation, will do the work, and the structure is not intended or offered for sale (Sec. 7044, Business and Professions Code: The Contractors License Law does not apply to an owner or property who builds or improves thereon, and who does such work himself or herself or through his or her own employees, provided that such improvements are not intended or offered for sale. If, however, the building or improvement is sold within one year of completion, the owner-builder will have the burdon of proving that he or she did not build or improve for the purpose of sale.)

_____ I, as owner of the property, am exclusively contracting with licensed contractors to construct the project (Sec. 7044, Business and Professions Code: The Contractors License Law does not apply to an owner or Property who builds or improves thereon, and who contracts for such projects with a contractor(s) licensed pursuant to the Contractors License Law.)
I am exempt under Sec. _____ B.P.C. for this reason _____
DATE _____ OWNER _____

WORKERS COMPENSATION DECLARATION

I hereby affirm under penalty of perjury one of the following declarations:
_____ I have and will maintain a certificate of consent to self-insure for workers' compensation, as provided for by Section 3700 of the Labor Code, for the performance of the permit is issued.

_____ I have and will maintain workers' compensation insurance, as required by Section 3700 of the Labor Code, for the performance of the work for which this permit is issued. My workers' compensation insurance carrier and policy number are:
Carrier/Policy No: _____
(This section need not be completed if the permit is for one hundred dollars ($100) or less).
____ I certify that in the performance of the work for which this permit is issued, I shall not employ any person in any number so as to become subject to the workers' compensation laws or California, and agree that if I should become subject to the workers' compensation provisions of Section 3700 of the Labor Code, I shall forthwith comply with those provisions.
DATE _____ APPLICANT: _____
WARNING: FAILURE TO SECURE WORKERS' COMPENSATION COVERAGE IS UNLAWFUL, AND SHALL SUBJECT AN EMPLOYER TO CRIMINAL PENALTIES AND CIVIL FINES UP TO ONE HUNDRED THOUSAND DOLLARS ($100,000), IN ADDITION TO THE COST OF COMPENSATION, DAMAGES AS PROVIDED FOR IN SECTION 3706 OF THE LABOR CODE, INTEREST, AND ATTORNEY'S FEES.

CONSTRUCTION LENDING AGENCY

I hereby affirm under penalty of perjury that there is a construction lending agency for the performance of the work for which this permit is issued (Sec. 3097, Civ. C.).
DATE _____ APPLICANT: _____
* I certify that I have read this application and state that the above information is correct. I agree to comply with all city ordinances and state laws relating to building construction, and hereby authorize representatives of this city to enter upon the above-mentioned property for inspection purposes.

SIGNATURE OF APPLICANT OR AGENT :_____ **DATE** _____

INSPECTION SUMMARY

_____ BLDG IN PROGRESS
_____ BLDG IN PROGRESS
_____ SLAB
_____ SLAB
_____ TRUSSES
_____ TRUSSES
_____ REBAR
_____ TRUSSES
_____ SHEATHING
_____ TRUSSES
_____ TRUSSES
_____ TIE BEAM
_____ TIE BEAM
_____ REBAR
_____ BLDG IN PROGRESS

Permit Finaled Date: _____ Inspector Name: _____ Signature: _____

Permit No.	RES21-1143	**Permit Type**	BUILDING	**Site Address**	200 ESPLANADE DRIVE MIAMI SPRINGS, FL 33166
Applied	12/10/2021	**Applicant**			
Approved	05/18/2022	**Owner**	JOVANY JIMENEZ & AMBAR SARA PREVAL		
Issued	05/18/2022	**Contractor**			
Parent Permit No.		**Description**	ADDITION TO RESIDENCE AND OVERALL REMODELING TO EXIST RES.		
		Notes			

Date of Inspection	Inspection Type	Inspector	Result	Remarks	Notes
11/14/2024	BLDG IN PROGRESS	RICARDO ALLER	APPROVED	JOVANNY 786-587-7510	11/13/2024 3:02:24 PM MJ
10/31/2024	BLDG IN PROGRESS	RICARDO ALLER	APPROVED	JOVANNY 786-587-7510	10/30/2024 4:12:36 PM PLYWOOD & WIRE LATHING 11/1/2024 1:14:24 PM sheathing for lath
04/17/2024	SLAB	RICARDO ALLER	APPROVED	JOVANNY 786-587-7510	4/16/2024 1:44:19 PM mg
04/15/2024	SLAB	RICARDO ALLER	DISAPPROVED	JOVANNY 786-587-7510	4/12/2024 2:58:25 PM SF 4/16/2024 9:54:04 AM NO ONE ON SITE 8:00
10/23/2023	TRUSSES	RICARDO ALLER	APPROVED	JOVANNY 786-587-7510	10/20/2023 3:50:38 PM SF 10/24/2023 1:14:53 PM PICK UP ENGINEER LETTER
09/28/2023	TRUSSES	RICARDO ALLER	DISAPPROVED	JOVANNY 786-587-7510	9/27/2023 3:43:34 PM SF 10/2/2023 8:16:21 AM NEED ENGINEER LETTER
05/24/2023	REBAR	RICARDO ALLER	APPROVED	ARMANDO786-587-9645 /GEOVANI786-587-7510	5/22/2023 11:12:10 AM NB
05/24/2023	TRUSSES	RICARDO ALLER	DISAPPROVED	ARMANDO786-587-9645 /GEOVANI786-587-7510	5/22/2023 11:12:59 AM NB 5/25/2023 12:56:30 PM soilstatment 1-missing engineer letter for trusses.
05/24/2023	SHEATHING	RICARDO ALLER	APPROVED	ARMANDO786-587-9645 /GEOVANI786-587-7510	5/22/2023 11:12:38 AM NB
05/16/2023	TRUSSES	RICARDO ALLER	DISAPPROVED	ARMANDO786-587-9645	5/15/2023 3:24:48 PM NB - 2ND GEOVANNY - 786-587-7510 5/17/2023 11:01:43 AM NOT AS PER PLAN.

01/12/2023	TRUSSES	RICARDO ALLER	DISAPPROVED	ARMANDO 786.587.9645 AM	1/11/2023 9:14:31 AM EM 1/17/2023 9:20:36 AM NOT READY
10/07/2022	TIE BEAM	RICARDO ALLER	APPROVED	JOVANNY 786.587.7510 AM	10/6/2022 4:07:57 PM EM 10/10/2022 10:21:29 AM PICK UP ELEVATION CERTIFICATE
07/20/2022	TIE BEAM	RICARDO ALLER	DISAPPROVED	ARMANDO 7865879645,AMBAR 7865877391,	7/19/2022 1:51:36 PM MG 7/21/2022 10:15:17 AM MISSING APPROVED SHOP DRAWING ELEVATION CERT.
07/13/2022	REBAR	RICARDO ALLER	DISAPPROVED	JOVANNY 786.587.7510	7/12/2022 1:55:06 PM EM 7/14/2022 2:00:10 PM no permit plans
06/13/2022	BLDG IN PROGRESS	RICARDO ALLER	DISAPPROVED	ARMANDO 7865879645,AMBAR 7865877391,	6/9/2022 4:24:02 PM MG 6/14/2022 9:47:08 AM FOOTING, MISSING SOIL STATEMENT

My Dashboard

Permits
Apply / New Permit
Search Permit
Pay Fees

Contractor
Search Contractors
Additional Search

Properties
Search Property

Inspections
Schedule
Cancel
Scheduled

License
Search Licenses
Pay Fees

Violations
Search
Pay Fees

Report A Problem
Report Complaint
Search Complaints

Shopping Cart
Pay All Fees
Paid Items

Contact
Contact us

Permit Search

Search By: Permit Number
Search Operator: Equals
Search Value: RES21-1143

Click here for search examples

SEARCH

Search Results

PRINT

Search Results

Permit Number
RES21-1143

Permit #RES21-1143

Attachment Permit Inspections

Review - ZONING

Review Group:	AUTO
Review Type:	ZONING
Status:	APPROVED
Date Sent:	12/10/2021
Date Due:	12/20/2021
Date Returned:	12/14/2021
Reviewer:	CHRISTOPHER HEID
Remarks:	

The City of Miami Springs, Florida makes every effort to produce and publish the most current and accurate information possible. No warranties,expressed or implied, are provided for the data herein, its use, or its interpretation. Utilization of this website indicates understanding and acceptance of this statement.

©1990-2021 CentralSquare Technologies, LLC. All Rights Reserved.

BUILDING PERMIT

City of Miami Springs

201 Westward Drive
Miami Springs, Florida 33166
(305) 805-5030

PERMIT NUMBER
RES21-1143

PERMIT TYPE: **BUILDING** PERMIT SUB TYPE : **ADDITION**	Issued Date: **5/18/2022** Expired Date: **11/14/2022**	TAX MAP NO: **05-3118-016-1590** BLDG USE GROUP:
JOB ADDRESS: **200 ESPLANADE DRIVE** DESCRIPTION: **ADDITION TO RESIDENCE AND OVERALL REMODELING TO EXIST RES.**		
ZONED AS: TOTAL WORK VALUE:**$0.00**	TOTAL SQFT:**0** TYPE OF CONSTRUCTION:	
OWNER: **JOVANY JIMENEZ & AMBAR SARA PREVAL** MAILING ADDRESS: **200 N ESPLANADE DR MIAMI SPRINGS, FL 33166**		PHONE: **(786)587-7391** FAX:
CONTRACTOR: MAILING ADDRESS: ,		PHONE: FAX:

FEES

DESCRIPTION	ACCOUNT	QUANTITY	PAID AMOUNT
BUILDING PERMIT FEE	145-0000-322.00-00	0	$5275.00
CODE COMPLIANCE	145-0000-217-40-00	0	$108.00
DBPR	145-0000-217.60-00	0	$81.00
DCA	145-0000-217-50-00	0	$54.00
MISCELLANEOUS PERMIT FEE	145-0000-329.09-00	0	$100.00
RESIDENTIAL REVIEW	001-0000-329.13-00	0	$100.00
RESIDENTIAL REVIEW	145-0000-329.06-00	0	$100.00
SCANNING	145-0000-220.27-00	0	$187.00
TECHNOLOGY	145-0000-220.26-00	0	$540.00
UPFRONT FEE	145-0000-322.00-00	0	$125.00
			TOTAL: $6,670.00

ALL WORK TO CONFORM TO THE CURRENT EDITION OF THE INTERNATIONAL BUILDING CODE (IBC).
NEXT DAY INSPECTION REQUESTS MUST BE IN BEFORE 3 P.M.
NEXT DAY INSPECTION BY BLD OFFICICAL MUST BE IN BY 12 NOON

Building Official:

Issued By: **EMILY MURILLO**

OFFICE COPY
CITY OF MIAMI SPRINGS

MIAMI-DADE COUNTY
PRODUCT CONTROL SECTION
11805 SW 26 Street, Room 208
Miami, Florida 33175-2474
T (786) 315-2590 F (786) 315-2599
www.miamidade.gov/economy

DEPARTMENT OF REGULATORY AND ECONOMIC RESOURCES (RER)
BOARD AND CODE ADMINISTRATION DIVISION

CITY OF MIAMI SPRINGS
BUILDING DEPARTMENT

NOTICE OF ACCEPTANCE (NOA)

DEC 10 2021
RECEIVED

Nu-Vue Industries, Inc.
1055 East 29 Street
Hialeah, Florida 33013

SCOPE: This NOA is being issued under the applicable rules and regulations governing the use of construction materials. The documentation submitted has been reviewed and accepted by Miami-Dade County RER-Product Control Section to be used in Miami Dade County and other areas where allowed by the Authority Having Jurisdiction (AHJ).

This NOA shall not be valid after the expiration date stated below. The Miami-Dade County Product Control Section (In Miami Dade County) and/or the AHJ (in areas other than Miami Dade County) reserve the right to have this product or material tested for quality assurance purposes. If this product or material fails to perform in the accepted manner, the manufacturer will incur the expense of such testing and the AHJ may immediately revoke, modify, or suspend the use of such product or material within their jurisdiction. RER reserves the right to revoke this acceptance if it is determined by Miami-Dade County Product Control Section that this product or material fails to meet the requirements of the applicable building code.

This product is approved as described herein and has been designed to comply with the Florida Building Code, including the High Velocity Hurricane Zone.

DESCRIPTION: Series NVTA, NVTAS, NVBH, NVUH, NVRT and NVTH Steel Wood Connectors

APPROVAL DOCUMENT: Drawing No. **NU-2**, titled "NVTA and NVTAS, NVBH 24 and NVUH 26, NVRT and NVTH", sheets 1 through 4 of 4, dated 06/25/2020, prepared by Nu-Vue Industries, Inc., signed and sealed by Vipin N. Tolat, P.E., bearing the Miami-Dade County Product Control revision stamp with the Notice of Acceptance (NOA) number and expiration date by the Miami-Dade County Product Control Section.

MISSILE IMPACT RATING: None

LABELING: A permanent mark with the manufacturer's name, acronym or logo is to be located on each unit. A permanent label with the manufacturer's name or logo, city, state, model/series, and the statement reading 'Miami-Dade County Product Control Approved' is to be located on each packaging carton.

RENEWAL of this NOA shall be considered after a renewal application has been filed and there has been no change in the applicable building code negatively affecting the performance of this product.

TERMINATION of this NOA will occur after the expiration date or if there has been a revision or change in the materials, use, and/or manufacture of the product or process. Misuse of this NOA as an endorsement of any product, for sales, advertising or any other purposes shall automatically terminate this NOA. Failure to comply with any section of this NOA shall be cause for termination and removal of NOA.

ADVERTISEMENT: The NOA number preceded by the words Miami-Dade County, Florida, and followed by the expiration date may be displayed in advertising literature. If any portion of the NOA is displayed, then it shall be done in its entirety.

INSPECTION: A copy of this entire NOA shall be provided to the user by the manufacturer or its distributors and shall be available for inspection at the job site at the request of the Building Official.

This NOA **renews** and **revises NOA # 17-0802.09** and consists of this page 1 and evidence pages E1, E-2 and E3, as well as approval document mentioned above.

The submitted documentation was reviewed by **Carlos M. Utrera, P.E.**

MIAMI-DADE COUNTY APPROVED

NOA No: 20-0519.03
Expiration Date: July 30, 2025
Approval Date: July 30, 2020
Page 1

NOTICE OF ACCEPTANCE: EVIDENCE SUBMITTED

1. EVIDENCE SUBMITTED UNDER PREVIOUS NOAs

A. DRAWINGS

1. Drawing No. **NU-2**, titled "NVTA and NVTAS, NVBH 24 and NVUH 26, NVRT and NVTH", sheets 1 through 4 of 4, dated 04/15/2015, prepared by Nu-Vue Industries, Inc., signed and sealed by Vipin N. Tolat, P.E.

B. TEST *"Submitted under NOA No. 05-0701.04"*

Test reports on wood connectors per ASTM D1761 by Product Testing, Inc., signed and sealed by C. R. Caudel, P.E. and S. E. Black, P.E.

	Report No.	Wood Connector	Direction	Date
1.	PT 02-4073	NVTA	Upward	11/06/02
2.	PT 02-4075	NVTA	Upward	11/07/02
3.	PT 02-4074	NVTA	Upward	11/06/02
4.	PT 02-3938	NVTA	Upward	08/06/02
5.	PT 03-4177	NVRT36	Upward	02/03/03
6.	PT 03-4202	NVRT36-T	Upward	02/19/03
7.	PT 03-4271	NVRT36-T	Upward	03/27/03
8.	PT 03-4270	NVRT24-T	Upward	03/27/03
9.	PT 02-4095	NVUH26	Up & Downward	01/17/03
10.	PT 02-4096	NVBH24	Up &Downward	12/03/02
11.	31-22456.0002	NVTA & NVTAS	Lateral	07/06/02
12.	PT 04-4698	NVTH24	Upward Parallel/Perpendicular	04/15/04
13.	PT 04-5036	NVTH24	Upward Load	12/10/04

C. CALCULATIONS *"Submitted under NOA No. 04-1202.01"*

Report of Design Capacities prepared by Vipin N. Tolat, P.E.

	Product Model	No. of Pages	Date	Signature
1.	NVBM24	7 through 8	05/05/03	V. N. Tolat, P.E
2.	NVRT	9 through 14	05/05/03	V. N. Tolat, P.E.
3.	NVTA & NVTAS	1 through 6	05/05/03	V. N. Tolat, P.E.
4.	NVTA & NVTAS	1 through 14	02/06/03	V. N. Tolat, P.E.
5.	NVRT	15 through 15	07/07/03	V. N. Tolat, P.E.

D. QUALITY ASSURANCE

1. Miami-Dade Department of Regulatory and Economic Resources (RER)

E. MATERIAL CERTIFICATIONS

1. None.

Carlos M. Utrera, P.E.
Product Control Examiner
NOA No: 20-0519.03
Expiration Date: July 30, 2025
Approval Date: July 30, 2020

NOTICE OF ACCEPTANCE: EVIDENCE SUBMITTED

F. STATEMENTS

1. Statement letter of code conformance to 2010 and 5th (2014) edition of the FBC, issued by Vipin N. Tolat, P.E., dated 04/29/2015, signed and sealed by Vipin N. Tolat, P.E.

   "Submitted under NOA No. 04-1202.01"

2. No Financial Interest and code compliance letter issued by Vipin N. Tolat, P.E., on 03/26/2003 signed and sealed by Vipin N. Tolat, P.E.

2. EVIDENCE SUBMITTED UNDER NOA # 17-0802.09

A. DRAWINGS

1. Drawing No. **NU-2**, titled "NVTA and NVTAS, NVBH 24 and NVUH 26, NVRT and NVTH", sheets 1 through 4 of 4, dated 07/17/2017, prepared by Nu-Vue Industries, Inc., signed and sealed by Vipin N. Tolat, P.E.

B. TEST

1. None.

C. CALCULATIONS

1. None.

D. QUALITY ASSURANCE

1. Miami-Dade Department of Regulatory and Economic Resources (RER)

E. MATERIAL CERTIFICATIONS

1. None.

F. STATEMENTS

1. Statement letter of code conformance to the 5th Edition (2014) and 6th Edition (2017) FBC and of no financial interest, issued by Vipin N. Tolat, P.E., dated 07/25/2017, signed and sealed by Vipin N. Tolat, P.E.

Carlos M. Utrera, P.E.
Product Control Examiner
NOA No: 20-0519.03
Expiration Date: July 30, 2025
Approval Date: July 30, 2020

NOTICE OF ACCEPTANCE: EVIDENCE SUBMITTED

3. NEW EVIDENCE SUBMITTED

A. DRAWINGS

1. Drawing No. **NU-2**, titled "NVTA and NVTAS, NVBH 24 and NVUH 26, NVRT and NVTH", sheets 1 through 4 of 4, dated 06/25/2020, prepared by Nu-Vue Industries, Inc., signed and sealed by Vipin N. Tolat, P.E.

B. TEST

1. None.

C. CALCULATIONS

1. Verification calculations for compliance with the ASTM D7147-05 and ASTM D7147-11 prepared by Vipin N. Tolat, P.E. dated 04/28/2020, signed and sealed by Vipin N. Tolat, P.E.

D. QUALITY ASSURANCE

1. Miami-Dade Department of Regulatory and Economic Resources (RER)

E. MATERIAL CERTIFICATIONS

1. None.

F. STATEMENTS

1. Statement letter of code conformance to the 6th Edition (2017) and the 7th Edition (2020) FBC and of no financial interest, issued by Vipin N. Tolat, P.E., dated 06/25/2020, signed and sealed by Vipin N. Tolat, P.E.

Carlos M. Utrera, P.E.
Product Control Examiner
NOA No: 20-0519.03
Expiration Date: July 30, 2025
Approval Date: July 30, 2020

CITY OF MIAMI SPRINGS

BUILDING DEPARTMENT
201 Westward Drive, Second Floor
Miami Springs, FL 33166
Office: 305-805-5030 Fax: 305-805-5036
www.miamisprings-fl.gov

Date: 12/10/21 Clerk: EM

☑ Master Permit 21-1143

JOB ADDRESS 200 Esplanade Dr **PERMIT APPLICATION** ☐ Sub-Permit

1. OWNER INFORMATION
Owner AMBAR PREVAL
Address 200 N. ESPLANADE DR.
City MIAMI SPRINGS ST FL Zip 33166
Driver License No. /I.D.
Phone No. 786 587 7391

2. CONTRACTOR INFORMATION
Company Name
Qualifier Name #10
Address
City ST Zip
Lic. No. Phone No.

3. PERMIT TYPE (Choose only One)
☒ Building
☐ Electrical
☐ Mechanical
☐ Plumbing/Gas
☐ Sign
☐ Roofing

4. CHANGE TO AN EXISTING PERMIT (Choose only One)
☐ Change Contractor
☐ Extension
☐ Renewal
☐ Shop Drawing
☐ Lost Plans

5. TYPE OF IMPROVEMENT (Choose only One)
☐ New Construction ☐ Re-roof ☐ Pool
☒ Addition Attached ☐ Driveway ☐ Shed
☐ Alteration Interior ☐ Fence ☐ Other:
☐ Alteration Exterior ☐ Window
☐ Repair/Replace ☐ Door
☐ Demolition/Partial ☐ Shutters

6. ARCHITECT/ ENGINEER INFO
Name GUILLERMO R. GONZALEZ
Address 13400 SW 134TH AVE
City MIAMI ST FL Zip Code 33186
Lic. No. 13960 Discipline R.A.
Phone No. 305 484 8171

7. CONTACT
Name AMBAR PREVAL
E-mail AMBARPREVAL@GMAIL.COM
Phone No. 786 587 7391

8. LEGAL/USE/WORK VALUE
Folio No. 05-3118-016-1590 No. of Units 1
Lot 1&2 Block 58 Subdivision CINEMA PARK COUNTRY CLUB ESTATES ADDITION
Current Use of Property SINGLE FAMILY RES.
Description of Work ADDITION TO RESIDENCE AND OVERALL REMODELING TO EXIST. RES.
Square FT. NEW 467 # >=656 Linear FT. 7758
Work Value 180,000 Building Value $90,000
Flood Zone AH-7.0' Base Flood Elevation 7.0'

Application is hereby made to obtain a permit to do the work and/or installations as indicated. I certify that no work or installation has commenced prior to the issuance of a permit and that all work will be performed to meet the standards of all laws regulating construction in this jurisdiction. I understand that a separate permit must be secured for Electrical, Plumbing, Signs, Wells, Pools, Furnaces, Boilers, Heaters, Tanks, Air Conditioning, Driveways, Portable Storage Units, etc.
Owner's Affidavit: I certify that all the foregoing information is accurate and that work will be done in compliance with all applicable laws regulating construction and zoning.

NOTICE REGARDING BUILDING PERMIT APPLICATIONS
Completion and submission of a Building Permit Application is a requirement of securing a City Building Permit. The City will rely upon the information contained in the Application in determining whether a City Building Permit should be issued. The submission of inaccurate, misleading or misrepresented information in the Application shall subject the Building Permit to denial, suspension or revocation, and the individual applying for the permit to all appropriate fines, penalties and other punishments authorized by law. KINDLY GOVERN YOURSELF ACCORDINGLY.
WARNING TO OWNER: YOUR FAILURE TO RECORD A NOTICE OF COMMENCEMENT MAY RESULT IN YOU PAYING TWICE FOR IMPROVMENTS TO YOUR PROPERTY. IF YOU INTEND TO OBTAIN FINANCING, CONSULT WITH YOUR LENDER OR AN ATTORNEY BEFORE RECORDING YOUR NOTICE OF COMMENCEMENT.

Jovany Jimenez — Owners Signature
PRINT NAME
SWORN TO AND SUBSCRIBED BEFORE ME BY: (PRINT NAME)
Jovany Jimenez
BY MEANS OF [✓] PHYSICAL PRESENCE OR [ ] ONLINE NOTARIZATION AND PRODUCED
FLDL
As identification, this 10 day of December 20 21
Notary's Signatures
Printed Name of Notary Emily Murillo

EMILY MURILLO
MY COMMISSION # HH 123670
EXPIRES: April 28, 2025
Bonded Thru Notary Public Underwriters

QUALIFIER INFORMATION
PRINT NAME — OWNERS SIGNATURE
SWORN TO AND SUBSCRIBED BEFORE ME BY: (PRINT NAME)
BY MEANS OF [ ] PHYSICAL PRESENCE OR [ ] ONLINE NOTARIZATION AND PRODUCED
As identification, this ____ day of ____ 20 ____
Notary's Signatures
Printed Name of Notary

DO NOT WRITE BELOW – FOR OFFICE USE ONLY

✓	TRADE	APPROVED/DATE	DISAPPROVED/DATE
	Zoning	CH 12/16/21	
	Structural	OK	1/3/22 4/13/22 5/11/22
	Building	MF 5/11/22	7/1/22
	Electrical		
	Mechanical	MM 2.17.22	
	Plumbing	BK 02-17-22	
	Roofing		
	Flood		
	Publics Works		81/54

APPLICATION INCLUDES	FEES $	.00
Zoning	100	00
Structural	100	00
Base Fee	$400	00
Scanning	187	00
Technology	540	00
Rework	100	00
Violation		
DBPR/DCA	135	00
Code Compliance	108	00
(-) Upfront Fee	125	00
Balance Due	6445	00

Total: 6,670.00

Revised 08/27/2021

CITY OF MIAMI SPRINGS

BUILDING AND CODE COMPLIANCE DEPARTMENT

201 Westward Drive
Miami Springs, FL 33166

Tel: 305-805-5030
Fax: 305-805-5036

INSTRUCTIONS TO OWNER-BUILDERS

Pursuant to Florida Statute 489.103 (7) owners of real property when acting as their own contractor and providing all material supervision themselves, when building or improving one-family residences or commercial property, shall be provided with the following disclosure statement by the local permitting agency.

State law requires construction to be done by licensed contractors. You have applied for a permit under an exemption to that law. The exemption allows you, as the owner of your property, to act as your own contractor with certain restrictions even though you do not have a license. You must provide direct, onsite supervision of the construction yourself. You may build or improve a commercial building, provided your costs do not exceed $25,000. ***The building or residence must be for your own use or occupancy. It may not be built or substantially improved for sale or lease. If you sell or lease a building you have built or substantially improved yourself within 1 year after the construction is complete, the law will presume that you built or substantially improved it for sale or lease, which is a violation of this exemption.*** *You may not hire an unlicensed person to act as your contractor or to supervise people working on your building. It is your responsibility to make sure that people employed by you have licenses required by state law and by county or municipal licensing ordinances. You may not delegate the responsibility for supervising work to a licensed contractor who is not licensed to perform the work that is being done. Any person working on your building who is not licensed must work under your direct supervision and must be employed by you, which means that you must deduct F.I.C.A. and withholding tax and provide workers' compensation for that employee, all as prescribed by law. Your construction must comply with all applicable laws, ordinances, building Codes, and zoning regulations.*

PROOF OF OWNERSHIP - Prior to a building permit being issued to you, you must submit proof of ownership of the land concerned in the application in the form of a recorded deed, showing you own the property, or a copy of mortgage or warranty deed of the land, or a Dade County tax receipt, statement to contain legal description of property and indicate property is in your name. Legal description and name on document of proof must correspond to the name and legal description on the application.

RESPONSIBILITY - You will be responsible for all work done by your day labor employees, and you must either employ licensed contractors or persons to be paid on an hourly or per diem basis. Anyone contracting (including labor) with you, verbally or in writing, on a fixed fee basis for any work, who is not properly licensed, will be subject to a fine of $500 pursuant to Florida Statute 489.127 (4) (c) and/or imprisonment for up to one year pursuant to Florida statute 489.127.

INSURANCE - You should be advised that if your labor employees cause any damage to persons or property, or if any of your day labor employees are injured on the job, YOU ARE LIABLE. Your regular home insurance policy ordinarily does not cover this type of liability.

WITHHOLDING TAXES - You should be advised to investigate your responsibility for withholding Social Security, Federal and State Unemployment Insurance Taxes from the wages of employees working for you on the proposed construction, and for making returns thereof to the proper agency.

DEMOLITION WORK - In addition to meeting Florida Building Code requirements stated above, you are responsible for disconnecting all utilities, including water, sewer, septic tank, electrical service, gas, telephone, cable TV, etc., prior to commencing demolition. You are also required to obtain a permit from the State of Florida Department of Health and Rehabilitative Services in order to abandon any septic tank that is on the property.

Notice: Separate permits are required for electrical, septic tank abandonment, plumbing, roofing and mechanical work.

I, Jovanny Jimenez the owner of the property described as 200 Esplanade Dr Miami Springs, FL 33166, do hereby certify that I have read the foregoing instructions, and am aware of my responsibilities and liabilities for a building permit for construction work on the above described property. **HAVING READ THE ABOVE STATE LAWS AND REQUIREMENTS, I UNDERSTAND AND AGREE THAT I WILL ABIDE BY SUCH LAWS AND REQUIREMENTS.**

Notary Signature | Property Owner | 12/10/21 Date

The foregoing instrument was acknowledged before me this 10 day of December 21 by Jovanny Jimenez

( ) is personally known to me
( ) has produced _____ as identification.

Notary Public

EMILY MURILLO
MY COMMISSION # HH 123670
EXPIRES: April 28, 2025
Bonded Thru Notary Public Underwriters

Cash Register Receipt

City of Miami Springs

Receipt Number
194035

DESCRIPTION	ACCOUNT	QTY	PAID
PermitTRAK			**$6,445.00**
RES21-1143 Address: 200 ESPLANADE DRIVE APN: 05-3118-016-1590			**$6,445.00**
DCA AND DBPR AND CODE			$243.00
CODE COMPLIANCE	145-0000-217-40-00	0	$108.00
DBPR	145-0000-217.60-00	0	$81.00
DCA	145-0000-217-50-00	0	$54.00
MISCELLANEOUS FEES			$100.00
MISCELLANEOUS PERMIT FEE	145-0000-329.09-00	0	$100.00
RESIDENTIAL BUILDING PERMIT FEE			$5,275.00
BUILDING PERMIT FEE	145-0000-322.00-00	0	$5,275.00
SCANNING AND TECHNOLOGY			$727.00
SCANNING	145-0000-220.27-00	0	$187.00
TECHNOLOGY	145-0000-220.26-00	0	$540.00
STRUCTURAL REVIEW			$100.00
RESIDENTIAL REVIEW	145-0000-329.06-00	0	$100.00
TOTAL FEES PAID BY RECEIPT:194035			[illegible]

Date Paid: Wednesday, May 18, 2022

Paid By: JOVANY JIMENEZ

Cashier: MBM

Pay Method: CHECK 1002

PERMIT ROUTING LOG SHEET

CITY OF MIAMI SPRINGS

MIAMI SPRINGS
At the Heart of it All!

Work Site Address: 200 Esplanade Dr.
Permit No.: 21-1143
Owner's Name: Ambar Preval
Date Received: 12/10/21
Contractor's Name: HTO
Contact Phone No.: (786 587-7391)

Reviewer	Approved	Date	Disapproved	Date	Comments: Addition
☑ Zoning $	CH	12/16/21	CH REWORK	12/14/21	SURVEY REQUIRED TABULAR SUMMARY IN COMPARATIVE FORMAT REQUIRED SEE SAMPLE DATA SHEET ATTACHED.
☑ Mechanical $	[illegible]	2.17.22			
☑ Electrical $	OK	4/21/22	[illegible]	2/16/22	Missing Receptacle's to Comply with NEC 210.52 SEE Marking
☑ Plumbing $	EL	02-12-22	EIA REWORK	12-19-21 2/14/22	① W/MACHINE WET-VENT NOT TO CODE ② SHOW WATER HEATER DETAIL + LOCATION ON PLAN ③ SEE P-1 REDMARKS ON PLAN ③ PLEASE DON'T REMOVE REVIEW PAGE.
☐ Public Works $			REWORK	5/11/22 05/05/22 4/10/22	
☑ Structural $	OK		[illegible] REWORK	2/22/22 04-12-2022	Provide str. Calculation for complete review & see Bam
☑ Building ☐ Roofing $	[illegible]	5/12/22	[illegible] REWORK	1/6/22 7/14/22 3/17/22	Provide Job cost. Further compliance w/flood may be required. Further comments may follow. SEE OTHER SIDE →

Building Specialist (Comments): Jovani Took set of plans on 01-31-2022

3/22/22: Ambar took BOTH sets

04/26/22 - Jovany Jimenez took both sets of plans.

CITY OF MIAMI SPRINGS
BUILDING DEPARTMENT

MAR 09 2022

RECEIVED

Jovany Jimenez
Florida
U.S.A

ESTIMATE

 # EST-420212

Bill To
Jovany Jimenez

Estimate Date : 07 Mar 2022

#	Item & Description	Qty	Rate	Amount
1	New Roof	1.00	35,000.00	35,000.00
2	New Addition to house	1.00	5,000.00	5,000.00
3	Bathroom Three Remodel	1.00	10,000.00	10,000.00
4	Flooring & Tiles	1.00	14,000.00	14,000.00
5	Raise Floor	1.00	5,000.00	5,000.00
6	Outdoor terrace - Columns and finishes	1.00	3,000.00	3,000.00
7	Wall, and ceiling	1.00	10,000.00	10,000.00
8	interior and exterior Painting	1.00	5,000.00	5,000.00
9	~~Plumbing~~	1.00	8,000.00	8,000.00
10	~~Electric - Replace everything~~	1.00	8,000.00	8,000.00
11	~~Install windows and Doors~~	1.00	8,000.00	8,000.00
12	Dispose of Trash	1.00	700.00	700.00
			Sub Total	111,700.00
			Total	**$111,700.00**

Notes

Looking forward to your business.

POWERED BY ZOHO

CITY OF MIAMI SPRINGS
201 Westward Drive,
Miami Springs, FL 33166

AFFIDAVIT OF COMPLIANCE

I _____, the owner of **200 N ESPLANADE DR** understand that I may not receive a final inspection on any new permits until all the expired permits or cases below are addressed in full.

Permit/Code Compliance Case No.	Description
BP03-01016	EXPIRED PERMIT: WINDOWS & DOORS HOMEOWNER
BP04-00606	EXPIRED PERMIT: SLABS HOMEOWNER

I as the owner understand that the listed permits and code compliance cases above are open and might delay me from receiving any final inspections on any new permit applications under my address. I will be addressing the permit(s) and/or code compliance case(s) within the six months of any newly issued permit.

OWNER

PRINT NAME: _____

SIGNATURE: _____

STATE OF FLORIDA)
COUNTY OF MIAMI-DADE)
SWORN TO AND SUBSCRIBED BEFORE ME
THIS _____ DAY OF _____, 20_____
BY _____

NOTARY SIGNATURE _____

SEAL:

Guillermo Ramon Gonzalez RA.

REWORK

9000 SW.168th Avenue.
Miami, Florida 33186
Telephone: (305) 484-8171

Miami Springs Building Department
201 Westward Drive
Miami Springs, Florida 33166

April 29, 2022

Owner: Ambar Preval
Project Address: 200 N. Esplanade Drive Miami Springs, Florida 33166
Application Number: 21-1143

Response Sheet To Building Dept. Comments

1. **Structural:** Mr. Rodriquez, Please see Attached structural calculations. The Idea for these calculations is to calculate the new walls, footings and beams and to make sure that existing walls are reinforced properly when adding the 2' height over existing concrete beams as shown on the plans and section B on A-5.
2. Please see special inspector form that has been attached to each set of plans.
3. Please see certification letter now attached to both sets of plans.
4. The reinforced masonry calculations are in calculations. Also please see sheet A-2 for new tie down reinforcement at existing front walls.
5. The roof diagram with zones is on revised sheet A-6. Also for your comment#9 is the revised note for terrace plywood ceiling.
6. Please see beam detail on bottom left of sheet A-5, where it shows compliance with ACI 318-14.
7. Please see the soil statement notes #1 & #2 on top of sheet A-2. The wording is arranged differently but it says the same as in your comment #7.
8. Please see the roof strap NOAs have been submitted and are attached to each set of plans. Also on top center of sheet A-5 is a gravity & uplift legend with specs.
9. See revised terrace section-B on sheet A-6 for ceiling plywood backing.
10. Please see new full wall section-A on A-2 & Section B on sheet A-6. & SECT.-B ON A-5
11. See this response sheet.
12. **Building:** revised sheet D-1 to show all areas affected by raising the floor slab. Also revised scope of work note. There is no overhead electrical line. It is underground service to nearby pole (sw.) by adjacent alley area, see site plan. See flood criteria notes on SP-1/D-1 & A-2. See window schedule on sheet A-4 for SHGC. Window & door NOAS under separate permit. Shower enclosure type & specs (note) is on sheet A-1 on floor plan next to new bath for master bedroom. Shower detail is on sheet P-1. See precast lintel noas attached.

NOTE: SEE REINFORCED MASONRY AT REAR OF STRUCTURAL CALCS.

Respectfully,

RA.# 13960
License Number



Signature, Date
Guillermo Ramon Gonzalez

Guillermo Ramon Gonzalez RA

9000 SW. 168th Ave. Miami, Florida 33196
Telephone: (305) 484-8171

REWORK

Miami Springs Building Department
201 Westward Drive
Miami Springs, Florida 33166

April 29, 2022

Owner: Ambar Preval
Project Address: 200 N. Esplanade Drive Miami Springs, Florida 33166
Application Number: 21-1143

Architect's Certification

I, Guillermo Ramon Gonzalez, certify that These new alterations and structural modifications will not affect the structural integrity of the existing building and it's structural members as per 2020-7th Edition (Existing buildings 907).

Thus I hereby certify that all work including the items mentioned above will be functional and in accordance with the approved plans and "F.B.C." 2020 -7th Edition.

Respectfully.

RA.# 13960
License Number

Signature, Seal and Date
Guillermo Ramon Gonzalez

OFFICE COPY
CITY OF MIAMI SPRINGS

MIAMI-DADE COUNTY
PRODUCT CONTROL SECTION
11805 SW 26 Street, Room 208
Miami, Florida 33175-2474
T (786) 315-2590 F (786) 315-2599
www.miamidade.gov/economy

CITY OF MIAMI SPRINGS
BUILDING DEPARTMENT
DEC 10 2021
RECEIVED

DEPARTMENT OF REGULATORY AND ECONOMIC RESOURCES (RER)
BOARD AND CODE ADMINISTRATION DIVISION

NOTICE OF ACCEPTANCE (NOA)

Nu-Vue Industries, Inc.
1055 East 29th Street
Hialeah, FL 33013

SCOPE: This NOA is being issued under the applicable rules and regulations governing the use of construction materials. The documentation submitted has been reviewed and accepted by Miami-Dade County RER-Product Control Section to be used in Miami Dade County and other areas where allowed by the Authority Having Jurisdiction (AHJ).

This NOA shall not be valid after the expiration date stated below. The Miami-Dade County Product Control Section (In Miami Dade County) and/or the AHJ (in areas other than Miami Dade County) reserve the right to have this product or material tested for quality assurance purposes. If this product or material fails to perform in the accepted manner, the manufacturer will incur the expense of such testing and the AHJ may immediately revoke, modify, or suspend the use of such product or material within their jurisdiction. RER reserves the right to revoke this acceptance if it is determined by Miami-Dade County Product Control Section that this product or material fails to meet the requirements of the applicable building code.

This product is approved as described herein and has been designed to comply with the Florida Building Code, including the High Velocity Hurricane Zone.

DESCRIPTION: Series AB, NVSTA, NVHTA, NVTHJ, IKE, NVTT and NVHC-37 Steel Wood Connectors

APPROVAL DOCUMENT: Drawing No. **NU-1**, titled "Truss and Top Plate Anchors", sheets 1 through 4 of 4, dated 08/18/2020, prepared by Nu-Vue Industries, Inc., signed and sealed by Vipin N. Tolat, P.E., bearing the Miami-Dade County Product Control revision stamp with the Notice of Acceptance number and expiration date by the Miami-Dade County Product Control Section.

MISSILE IMPACT RATING: None

LABELING: Each unit shall bear a permanent label with the manufacturer's name or logo, city, state, model/series, and following statement: "Miami-Dade County Product Control Approved", unless otherwise noted herein.

RENEWAL of this NOA shall be considered after a renewal application has been filed and there has been no change in the applicable building code negatively affecting the performance of this product.

TERMINATION of this NOA will occur after the expiration date or if there has been a revision or change in the materials, use, and/or manufacture of the product or process. Misuse of this NOA as an endorsement of any product, for sales, advertising or any other purposes shall automatically terminate this NOA. Failure to comply with any section of this NOA shall be cause for termination and removal of NOA.

ADVERTISEMENT: The NOA number preceded by the words Miami-Dade County, Florida, and followed by the expiration date may be displayed in advertising literature. If any portion of the NOA is displayed, then it shall be done in its entirety.

INSPECTION: A copy of this entire NOA shall be provided to the user by the manufacturer or its distributors and shall be available for inspection at the job site at the request of the Building Official.

This NOA **revises NOA # 18-0312.06** and consists of this page 1 and evidence pages E-1, E-2, E-3 and E-4, as well as approval document mentioned above.

The submitted documentation was reviewed by **Carlos M. Utrera, P.E.**

MIAMI-DADE COUNTY APPROVED

NOA No. 20-0901.05
Expiration Date: May 22, 2023
Approval Date: November 5, 2020
Page 1

NOTICE OF ACCEPTANCE: EVIDENCE SUBMITTED

4. New Evidence Submitted

A. DRAWINGS

1. Drawing No. **NU-1**, titled "Truss and Top Plate Anchors", sheets 1 through 4 of 4, dated 08/18/2020, prepared by Nu-Vue Industries, Inc., signed and sealed by Vipin N. Tolat, P.E.

B. TESTS

1. None.

C. CALCULATIONS

1. None.

D. QUALITY ASSURANCE

1. Miami-Dade Department of Regulatory and Economic Resources (RER)

E. MATERIAL CERTIFICATIONS

1. None.

F. STATEMENTS

1. Statement letter of code conformance to the 6th Edition (2017) and 7th Edition (2020) FBC and of no financial interest, dated 08/18/2020, signed and sealed by Vipin N. Tolat, P.E.

Carlos M. Utrera, P.E.
Product Control Examiner
NOA No. 20-0901.05
Expiration Date: May 22, 2023
Approval Date: November 5, 2020

OFFICE COPY
CITY OF MIAMI SPRINGS

MIAMI-DADE COUNTY
PRODUCT CONTROL SECTION
11805 SW 26 Street, Room 208
Miami, Florida 33175-2474
T (786) 315-2590 F (786) 315-2599
www.miamidade.gov/economy

DEPARTMENT OF REGULATORY AND ECONOMIC RESOURCES (RER)
BOARD AND CODE ADMINISTRATION DIVISION

NOTICE OF ACCEPTANCE (NOA)

CITY OF MIAMI SPRINGS
BUILDING DEPARTMENT
DEC 10 2021
RECEIVED

Rheem Sales Company, Inc.
5600 Old Greenwood Rd.
Fort Smith, AR 72917

SCOPE:

This NOA is being issued under the applicable rules and regulations governing the use of construction materials. The documentation submitted has been reviewed and accepted by Miami-Dade County RER-Product Control Section to be used in Miami-Dade County and other areas where allowed by the Authority Having Jurisdiction (AHJ).

This NOA shall not be valid after the expiration date stated below. The Miami-Dade County Product Control Section (In Miami-Dade County) and/ or the AHJ (in areas other than Miami-Dade County) reserve the right to have this product or material tested for quality assurance purposes. If this product or material fails to perform in the accepted manner, the manufacturer will incur the expense of such testing and the AHJ may immediately revoke, modify, or suspend the use of such product or material within their jurisdiction. RER reserves the right to revoke this acceptance if it is determined by Miami-Dade County Product Control Section that this product or material fails to meet the requirements of the applicable building code.

This product is approved as described herein and has been designed to comply with the Florida Building Code, including the High Velocity Hurricane Zone.

DESCRIPTION: Mechanical Unit Steel and Aluminum Tie-Down Clips for Grade and Rooftop Applications

APPROVAL DOCUMENT: Drawing No. **20-28800**, titled "Wind Load Certification of Mechanical Unit Cabinetry and Steel/ Aluminum Tie-Down Clips: At Grade and Roof Mounted Applications", sheets 1 through 7 of 7, dated 05/14/2015, revised on 10/19/2020, prepared by Engineering Express, signed and sealed by Frank L. Bennardo, P.E., bearing the Miami-Dade County Product Control revision stamp with the Notice of Acceptance number and expiration date by the Miami-Dade County Product Control Section.

MISSILE IMPACT RATING: None

LABELING: Each unit shall bear a permanent label with the manufacturer's name or logo, city, state, model/ series, and following statement: "Miami-Dade County Product Control Approved", unless otherwise noted herein.

RENEWAL of this NOA shall be considered after a renewal application has been filed and there has been no change in the applicable building code negatively affecting the performance of this product.

TERMINATION of this NOA will occur after the expiration date or if there has been a revision or change in the materials, use, and/ or manufacture of the product or process. Misuse of this NOA as an endorsement of any product, for sales, advertising or any other purposes shall automatically terminate this NOA. Failure to comply with any section of this NOA shall be cause for termination and removal of NOA.

ADVERTISEMENT: The NOA number preceded by the words Miami-Dade County, Florida, and followed by the expiration date may be displayed in advertising literature. If any portion of the NOA is displayed, then it shall be done in its entirety.

INSPECTION: A copy of this entire NOA shall be provided to the user by the manufacturer or its distributors and shall be available for inspection at the job site at the request of the Building Official.

This NOA **renews and revises NOA # 18-0719.07** and consists of this page 1 and evidence pages E-1, E-2, E-3 and E-4, as well as approval document mentioned above.

The submitted documentation was reviewed by **Carlos M. Utrera, P.E.**

MIAMI-DADE COUNTY APPROVED

NOA No. 20-1102.09
Expiration Date: February 25, 2026
Approval Date: March 4, 2021
Page 1

NOTICE OF ACCEPTANCE: EVIDENCE SUBMITTED

1. Evidence submitted under previous NOAs

A. DRAWINGS *"Submitted under NOA # 15-0903.08"*

1. Drawing No. **15-2543GA** and **15-2564RE**, titled "Wind Load Certification of Mechanical Unit Cabinetry and Steel/Aluminum Tie-Down Clips: At Grade and Roof Mounted Applications", sheets 1 through 7 of 7, dated 05/14/2015, revised on 11/20/2015, prepared by Engineering Express, signed and sealed by Frank L. Bennardo, P.E.

B. TESTS *"Submitted under NOA # 15-0903.08"*

1. Test report on Uniform Static Air Pressure Test per FBC, TAS 202-94 along with marked-up drawings and installation diagram of Rheem RA Series Mechanical Units, prepared by American Test Lab of South Florida, Test Report No. **0323.01-15**, dated 05/18/2015, signed and sealed by Stephen W. Warter, P.E.

C. CALCULATIONS *"Submitted under NOA # 15-0903.08"*

1. Anchorage calculations prepared by Engineering Express, dated 11/20/2015, signed and sealed by Frank L. Bennardo, P.E.

D. QUALITY ASSURANCE

1. Miami-Dade Department of Regulatory and Economic Resources (RER)

E. MATERIAL CERTIFICATIONS

1. None.

F. STATEMENT *"Submitted under NOA # 15-0903.08"*

1. Statement letter of code conformance to the 5th edition (2014) FBC issued by Engineering Express, dated 08/24/2015, signed and sealed by Frank L. Bennardo, P.E.
2. Statement letter of no financial interest issued by Engineering Express, dated 11/20/2015, signed and sealed by Frank L. Bennardo, P.E.
3. Distributor agreement dated 11/12/2015.

Carlos M. Utrera, P.E.
Product Control Examiner
NOA No. 20-1102.09
Expiration Date: February 25, 2026
Approval Date: March 4, 2021

NOTICE OF ACCEPTANCE: EVIDENCE SUBMITTED

2. Evidence submitted under NOA # 18-0321.11

A. DRAWINGS

1. Drawing No. **15-2543GA** and **15-2564RE**, titled "Wind Load Certification of Mechanical Unit Cabinetry and Steel/Aluminum Tie-Down Clips: At Grade and Roof Mounted Applications", sheets 1 through 7 of 7, dated 05/14/2015, revised on 01/12/2018, prepared by Engineering Express, signed and sealed by Frank L. Bennardo, P.E.

B. TESTS

1. None.

C. CALCULATIONS

1. None.

D. QUALITY ASSURANCE

1. Miami-Dade Department of Regulatory and Economic Resources (RER)

E. MATERIAL CERTIFICATIONS

1. None.

F. STATEMENTS

1. Statement letter of code conformance to the 6th Edition (2017) FBC issued by Engineering Express, dated 03/19/2018, signed and sealed by Frank L. Bennardo, P.E.

Carlos M. Utrera, P.E.
Product Control Examiner
NOA No. 20-1102.09
Expiration Date: February 25, 2026
Approval Date: March 4, 2021

NOTICE OF ACCEPTANCE: EVIDENCE SUBMITTED

3. Evidence submitted under NOA # 18-0719.07

A. DRAWINGS

1. Drawing No. Drawing No. **15-2543GA** through **15-2543GD** and **15-2564RE**, titled "Wind Load Certification of Mechanical Unit Cabinetry and Steel/ Aluminum Tie-Down Clips: At Grade and Roof Mounted Applications", sheets 1 through 7 of 7, dated 05/14/2015, revised on 01/12/2018, prepared by Engineering Express, signed and sealed by Frank L. Bennardo, P.E. on 07/17/2018.

B. TESTS

1. None.

C. CALCULATIONS

1. None.

D. QUALITY ASSURANCE

1. Miami-Dade Department of Regulatory and Economic Resources (RER)

E. MATERIAL CERTIFICATIONS

1. None.

F. STATEMENTS

2. Models removal request, dated 07/17/2018, signed and sealed by Frank L. Bennardo, P.E.

Carlos M. Utrera, P.E.
Product Control Examiner
NOA No. 20-1102.09
Expiration Date: February 25, 2026
Approval Date: March 4, 2021

NOTICE OF ACCEPTANCE: EVIDENCE SUBMITTED

4. New evidence submitted

A. DRAWINGS

1. Drawing No. **20-28800**, titled "Wind Load Certification of Mechanical Unit Cabinetry and Steel/ Aluminum Tie-Down Clips: At Grade and Roof Mounted Applications", sheets 1 through 7 of 7, dated 05/14/2015, revised on 10/19/2020, prepared by Engineering Express, signed and sealed by Frank L. Bennardo, P.E.

B. TESTS

1. None.

C. CALCULATIONS

1. None.

D. QUALITY ASSURANCE

1. Miami-Dade Department of Regulatory and Economic Resources (RER)

E. MATERIAL CERTIFICATIONS

1. None.

F. STATEMENTS

1. Statement letter of code conformance to the 7th edition (2020) FBC issued by Engineering Express, dated 10/19/2020, signed and sealed by Frank L. Bennardo, P.E.
2. Statement letter of no financial interest issued by Engineering Express, dated 10/19/2020, signed and sealed by Frank L. Bennardo, P.E.



Carlos M. Utrera, P.E.
Product Control Examiner
NOA No. 20-1102.09
Expiration Date: February 25, 2026
Approval Date: March 4, 2021

CITY OF MIAMI SPRINGS

BUILDING DEPARTMENT
201 Westward Drive, Second Floor
Miami Springs, FL 33166
Office: 305-805-5030 Fax: 305-805-5036
www.miamisprings-fl.gov

NOTICE TO CITY OF MIAMI SPRINGS BUILDING DEPARTMENT OF EMPLOYMENT AS SPECIAL INSPECTOR UNDER THE FLORIDA BUILDING CODE.

I (We) have been retained by JAMBAR PREVAL to perform special inspector services under the **Florida Building Code** ~~2017~~ 2020-7th Edition at the ADDITION & REMODELING to RES project on the below listed structure as of Dec 20 - 2021 (date). I am a registered Architect/Professional Engineer licensed in the State of Florida.

Permit Number: PENDING

OFFICE COPY
CITY OF MIAMI SPRINGS

CITY OF MIAMI SPRINGS
BUILDING DEPARTMENT
DEC 10 2021
RECEIVED

- ☐ Special Inspector for Piling, **FBC 1822.1.20 (R4404.6.1.20)**
- ☒ Special Inspector for Trusses > 35 ft. long or 6 ft. high, **FBC 2319.17.2.4.2 (R4409.6.17.2.4.2)**
- ☒ Special Inspector for Reinforced Masonry, **FBC 2122.4 (R4407.5.4)**
- ☐ Special Inspector for Steel Framing, **FBC 2218.2 (R4408.5.2)**
- ☒ Special Inspector for Soil Compaction, **FBC 1820.3.1 (R4404.4.3.1)**
- ☐ Special Inspector for Precast Attachments, **FBC 1927.12.2 (R4405.9.12)**
- ☐ Special Inspector for Roofing Applications, Lt. Weight. Insul.Conc. **FBC 1917.2 (R4405.12.2)**
- ☐ Other _____

Note: Only the marked boxes apply.
The following individual(s) employed by this firm or myself are authorized representative to perform inspection*

1. Guillermo R. Gonzalez 2. _____
3. _____ 4. _____

***Special inspectors utilizing authorized representatives shall insure the authorized representative is qualified by education or licensure to perform the duties assign by Special Inspector. The qualifications shall include licensure as a professional engineer or architect: graduation from an engineering education program in civil or structural engineering; graduation from an architectural education program; successful completion of the NCEES Fundamentals Examination; or registration as building inspector or general contractor.**

I (we) will notify the City of Miami Springs Building Department of any changes regarding authorized personnel performing inspection services.

I (we) understand that a Special Inspector inspection log for each building must be displayed in a convenient location on the site for reference by the City of Miami Springs Building Department Inspector. All mandatory inspections, as required by the Florida Building Code, must be performed by the City of Miami Springs Building Department. Inspections performed by the Special Inspector hired by the owner are in addition to the mandatory inspections performed by the department. Further, upon completion of work under each Building Permit, I will submit to the Building Inspector at the time of the final inspection the completed inspection log form and a sealed statement indicating that, to the best of my knowledge, belief and professional judgment those portions of the project outlined above meet the intent of the Florida Building Code and are in substantial accordance with the approval plans.

Engineer/Architect
Signed and Sealed

Engineer/Architect
Guillermo R. Gonzalez RA 13960
Print Name

Date: 12/8/21 Address: 13400 SW 134 AVE Miami FL 33186

Guillermo Ramon Gonzalez RA.

9000 SW.168th Avenue.
Miami, Florida 33186
Telephone: (305) 484-8171

Miami Springs Building Department
201 Westward Drive
Miami Springs, Florida 33166

March 22, 2022

Owner: Ambar Preval
Project Address: 200 N. Esplanade Drive Miami Springs, Florida 33166
Application Number: 21-1143

Response Sheet To Building Dept. Comments

1. **Structural:** Dear Sir, Please see Attached structural calculations.
2. **Building:** revised sheet D-1 to show all areas affected by raising the floor slab. Also revised scope of work note. There is no overhead electrical line. It is underground service to nearby pole or transf. (sw.) by adjacent alley area, see site plan for electric meter location.
   See flood criteria notes on SP-1/D-1 & A-2. See window schedule on sheet A-4 for SHGC. Window & door NOAS under separate permit, they will be submitted at a later date not part of this permit. Shower enclosure type & specs (note) is on sheet A-1 on floor plan next to new bath for master bedroom. Shower detail is on sheet P-1. See precast lintel noas attached. See detail-E on A-4 for new windows/doors to existing tie beam connection. Also see detail-C on A-6 for new front concrete steps. See flood criteria Note on SP-1 & A-2.
3. **Electrical:** See revised sheet E-1 for additional outlets as per comments.

Respectfully,

RA.# 13960
License Number

4-7-22
Signature, Date
Guillermo Ramon Gonzalez

Description

Final Loads & Moments

Wall Weight moment @ Mid Ht	290.00 lbs	Wind Moment @ Mid Ht	9,241.50 in-#
		Seismic Moment @ Mid Ht	0.00 in-#
Dead Load Moment @ Top of Wall	0.00 in-#		
Dead Load Moment @ Mid Ht	0.00 in-#	Total Dead Load	0.00 lbs
		Total Live Load	0.00 lbs
Live Load Moment @ Top of Wall	0.00 in-#		
LiveLoad Moment @ Mid Ht	0.00 in-#		

Maximum Allow Moment for Applied Axial Load = 9,636.44 in-#
Maximum Allow Axial Load for Applied Moment = 19,430.63 lbs

MIAMI-DADE COUNTY
DEPARTMENT OF REGULATORY AND ECONOMIC RESOURCES (RER)
BOARD AND CODE ADMINISTRATION DIVISION

MIAMI-DADE COUNTY
PRODUCT CONTROL SECTION
11805 SW 26 Street, Room 208
Miami, Florida 33175-2474
T (786) 315-2590 F (786) 315-2599
www.miamidade.gov/economy

NOTICE OF ACCEPTANCE (NOA)

Cast-Crete USA, LLC
6324 County Road 579
Seffner, Florida 33584

SCOPE:
This NOA is being issued under the applicable rules and regulations governing the use of construction materials. The documentation submitted has been reviewed and accepted by Miami-Dade County RER- Product Control Section to be used in Miami Dade County and other areas where allowed by the Authority Having Jurisdiction (AHJ).

This NOA shall not be valid after the expiration date stated below. The Miami-Dade County Product Control Section (In Miami Dade County) and/or the AHJ (in areas other than Miami Dade County) reserve the right to have this product or material tested for quality assurance purposes. If this product or material fails to perform in the accepted manner, the manufacturer will incur the expense of such testing and the AHJ may immediately revoke, modify, or suspend the use of such product or material within their jurisdiction. RER reserves the right to revoke this acceptance, if it is determined by Miami-Dade County Product Control Section that this product or material fails to meet the requirements of the applicable building code.

This product is approved as described herein, and has been designed to comply with the High Velocity Hurricane Zone of the Florida Building Code.

DESCRIPTION: "Cast-Crete" 8 inch High Strength Precast and Pre-stressed Concrete Lintels

APPROVAL DOCUMENT: Drawing No. FD8, titled "Cast-Crete 8" Lintel Fabrication Details", sheets 1 through 3 of 3, prepared by Craig Parrino, P.E., dated June 7, 1996, last revision dated June 12, 2014, signed and sealed by Craig Parrino, P.E., on January 22, 2019, bearing the Miami-Dade County Product Control Revision stamp with the Notice of Acceptance number and the expiration date by the Miami-Dade County Product Control Section.

MISSILE IMPACT RATING: Large and Small Missile Impact Resistant

LABELING: Each lintel shall bear a permanent label with the manufacturer's name or logo and the Miami-Dade County logo.

RENEWAL of this NOA shall be considered after a renewal application has been filed and there has been no change in the applicable building code negatively affecting the performance of this product.

TERMINATION of this NOA will occur after the expiration date or if there has been a revision or change in the materials, use, and/or manufacture of the product or process. Misuse of this NOA as an endorsement of any product, for sales, advertising or any other purposes shall automatically terminate this NOA. Failure to comply with any section of this NOA shall be cause for termination and removal of NOA.

ADVERTISEMENT: The NOA number preceded by the words Miami-Dade County, Florida, and followed by the expiration date may be displayed in advertising literature. If any portion of the NOA is displayed, then it shall be done in its entirety.

INSPECTION: A copy of this entire NOA shall be provided to the user by the manufacturer or its distributors and shall be available for inspection at the job site at the request of the Building Official.

This NOA **revises NOA # 19-0130.13** and consists of this page 1, evidence submitted pages E-1, E-2, E-3, E-4, E-5, E-6 & E-7 as well as approval document mentioned above.
The submitted documentation was reviewed by **Helmy A. Makar, P.E., M.S.**

MIAMI-DADE COUNTY APPROVED

Helmy A. Makar
08/20/2020

NOA No. 20-0630.16
Expiration Date: 05/21/2022
Approval Date: 08/20/2020
Page 1

Cast-Crete USA, LLC

NOTICE OF ACCEPTANCE: EVIDENCE SUBMITTED

1. EVIDENCE SUBMITTED UNDER PREVIOUS APPROVAL #96-0613.01

A. DRAWINGS

1. *Drawing No. FD8, titled "Cast-Crete 8" Lintel Fabrication Details", prepared by Craig Parrino, P.E., dated 06/07/96, revision #1 dated 11/08/96, sheet 1 of 1, and Drawing No. LT8, titled "Cast-Crete 8" Lintel Safe Load Tables", prepared by Craig Parrino, P.E., dated 06/07/97, revision #4 dated 04/28/98, sheet 1 of 1, both drawings signed and sealed by Craig Parrino, P.E.*

B. TESTS

1. *Test report on flexural testing on Precast and Pre-stressed Concrete Lintels Filled Models, total of (36) concrete lintel specimens, per ASTM E-529-94, prepared by Applied Research Laboratories, Report No. 29702B, dated 07/30/97, signed and sealed by Christopher A. Hamon, P.E.*

C. CALCULATIONS

1. *Calculations for Cast-Crete 8-inch Lintels, dated 06/06/96, 349 pages, prepared by Craig Parrino, P.E., signed and sealed by Craig Parrino, P.E.*
2. *Calculations for Cast-Crete 8-inch Lintels, dated 11/11/96, 45 pages, prepared by Craig Parrino, P.E., signed and sealed by Craig Parrino, P.E.*

D. MATERIAL CERTIFICATIONS

1. *Mill Certified Inspection Report Silo #4 dated April 1996 for cement by Southdown Brooksville Cement Laboratory.*
2. *Mill Certified Inspection Report #20-8275 dated 06/20/95 for pre-stressing strand by The Crispin Company.*
3. *Mill Certified Inspection Report #20-8345 dated 11/13/95 for pre-stressing strand by The Crispin Company.*
4. *Mill Certified Inspection Report #2111-078240 dated 04/25/96 for #3 rebar by Ameristeel.*
5. *Mill Certified Inspection Report #84-M19614 dated 02/29/96 for #5 rebar by Birmingham Steel Corp.*
6. *Mill Certified Inspection Report #58-A66332 dated 01/28/96 for #4 rebar by Birmingham Steel Corp.*
7. *Mill Certified Inspection Report #84-M20749 dated 04/05/96 for #5 rebar by Birmingham Steel Corp.*
8. *Mill Certified Inspection Report #84-M19805 dated 03/06/96 for #4 rebar by Birmingham Steel Corp.*
9. *Mill Certified Inspection Report #84-M21208 dated 04/21/96 for #4 rebar by Birmingham Steel Corp.*
10. *Mill Certified Inspection Report #84-M20652 dated 04/03/96 for #5 rebar by Birmingham Steel Corp.*

Helmy A. Makar, P.E., M.S.
Product Control Section Supervisor
NOA No. 20-0630.16
Expiration Date: 05/21/2022
Approval Date: 08/20/2020

11. *Mill Certified Inspection Report #84-M20749 dated 04/05/96 for #5 rebar by Birmingham Steel Corp.*
12. *Quality Control Manual for Cast-Crete Machine Made Precast Lintels dated 05/14/96.*
13. *Quality Control Manual for Pre-stressed Products dated 03/20/95.*

2. EVIDENCE SUBMITTED UNDER PREVIOUS APPROVAL #01-0209.03

A. DRAWINGS

1. None.

B. TESTS

1. None.

C. CALCULATIONS

1. None.

D. MATERIAL CERTIFICATIONS

1. None.

3. EVIDENCE SUBMITTED UNDER PREVIOUS APPROVAL # 03-0605.05

A. DRAWINGS:

1. Drawing No. FD8, titled "Cast-Crete 8" Lintel Fabrication Details", sheet 1 of 1, prepared by Craig Parrino, P.E., dated June 7, 1996, revision #2 dated January 28, 2003, and Drawing No. LT8, titled "Cast-Crete 8" Lintel Safe Load Tables", sheets 1 & 2 of 2, prepared by Craig Parrino, P.E., dated June 7, 1996, revision #5 dated March 24, 2003, all drawings are signed and sealed by Craig Parrino, P.E.

B. TESTS:

1. Test report on flexural testing on Precast Concrete Lintels Filled Models, total of (12) concrete lintel specimens, per ASTM E-529-94, prepared by Applied Research Laboratories, Report No. 30404B, dated 04/23/03, signed and sealed by Christopher A. Hamon, P.E.

C. CALCULATIONS:

1. Calculations for Cast-Crete High Strength Precast and Pre-stressed 8-inch Lintels, dated May 29, 2003, sheets 1.1 through 1.493 and 2.1 through 2.336, prepared by Craig Parrino, P.E., signed and sealed by Craig Parrino, P.E.

D. MATERIAL CERTIFICATION:

1. Quality System Manual for Cast-Crete Machine Made Precast Lintels revised on May 01, 2002.
2. Cast-Crete Quality System Manual for Pre-stressed Products dated 2002.

Helmy A. Makar, P.E., M.S.
Product Control Section Supervisor
NOA No. 20-0630.16
Expiration Date: 05/21/2022
Approval Date: 08/20/2020

NOTICE OF ACCEPTANCE: EVIDENCE SUBMITTED

4. EVIDENCE SUBMITTED UNDER PREVIOUS APPROVAL #06-0222.01

A. DRAWINGS

1. *Drawing No. FD8, titled "Cast-Crete 8" Lintel Fabrication Details", sheets 1 through 3 of 3, prepared by Craig Parrino, P.E., dated June 7, 1996, last revision dated February 17, 2006, signed and sealed by Craig Parrino, P.E.*

B. TESTS

1. *None.*

C. CALCULATIONS

1. *None.*

D. QUALITY ASSURANCE

1. *By Miami-Dade Building Code Compliance Office.*

E. MATERIAL CERTIFICATION

1. *None.*

F. OTHER

1. *Letter from Cast-Crete Corporation, dated 02/20/2006, signed by Craig Parrino, P.E.*

5. EVIDENCE SUBMITTED UNDER PREVIOUS APPROVAL # 11-0121.04

A. DRAWINGS

1. *None.*

B. TESTS

1. *None.*

C. CALCULATIONS

1. *None.*

D. QUALITY ASSURANCE

1. *By Miami-Dade Building and Neighborhood Compliance Department (BNC).*

E. MATERIAL CERTIFICATION

1. *None.*

F. OTHER

1. *Letter from Cast-Crete Corporation, dated January 18, 2011, signed by Craig Parrino, P.E., certifying compliance with the Florida Building Code, 2007 Edition.*

Helmy A. Makar, P.E., M.S.
Product Control Section Supervisor
NOA No. 20-0630.16
Expiration Date: 05/21/2022
Approval Date: 08/20/2020

NOTICE OF ACCEPTANCE: EVIDENCE SUBMITTED

6. EVIDENCE SUBMITTED UNDER PREVIOUS APPROVAL #12-0209.13

A. DRAWINGS

1. *Drawing No. FD8, titled "Cast-Crete 8" Lintel Fabrication Details", sheets 1 through 3 of 3, prepared by Craig Parrino, P.E., dated June 7, 1996, last revision dated February 17, 2006, signed and sealed by Craig Parrino, P.E., on March 22, 2012.*

B. TESTS

1. *None.*

C. CALCULATIONS

1. *None.*

D. QUALITY ASSURANCE

1. *By Miami-Dade County Department of Permitting, Environment, and Regulatory Affairs.*

E. MATERIAL CERTIFICATION

1. *None.*

F. OTHER

1. *Letter from Cast-Crete Corporation, dated 02/03/2012, signed and sealed by Craig Parrino, P.E., certifying compliance with the Florida Building Code, 2010 Edition.*

7. EVIDENCE SUBMITTED UNDER PREVIOUS APPROVAL #14-0903.02

A. DRAWINGS

1. *Drawing No. FD8, titled "Cast-Crete 8" Lintel Fabrication Details", sheets 1 through 3 of 3, prepared by Craig Parrino, P.E., dated June 7, 1996, last revision dated June 12, 2014, signed and sealed by Craig Parrino, P.E., on August 19, 2014.*

B. TESTS

1. *None.*

C. CALCULATIONS

1. *Calculations for High Strength Precast and Pre-stressed 8-inch Lintels, dated August 19, 2014, sheets 14.101 through 14.124, prepared, signed, sealed by Craig Parrino, P.E.*

D. QUALITY ASSURANCE

1. *By Miami-Dade County Department of Regulatory and Economic Resources (RER).*

E. MATERIAL CERTIFICATION

1. *None.*

F. OTHER

1. *Letter from Cast-Crete USA, Inc., dated August 19, 2014, signed and sealed by Craig Parrino, P.E., certifying compliance with the Florida Building Code, 2014 Edition.*

Helmy A. Makar, P.E., M.S.
Product Control Section Supervisor
NOA No. 20-0630.16
Expiration Date: 05/21/2022
Approval Date: 08/20/2020

NOTICE OF ACCEPTANCE: EVIDENCE SUBMITTED

8. EVIDENCE SUBMITTED UNDER PREVIOUS APPROVAL #16-0126.03

A. DRAWINGS

1. None.

B. TESTS

1. None.

C. CALCULATIONS

1. None.

D. QUALITY ASSURANCE

1. By Miami-Dade County Department of Regulatory and Economic Resources (RER).

E. MATERIAL CERTIFICATION

1. None.

F. OTHER

1. Letter from Cast-Crete USA, Inc., dated January 13, 2016, signed and sealed by Craig Parrino, P.E., certifying compliance with the Florida Building Code, 2014 Edition.

9. EVIDENCE SUBMITTED UNDER PREVIOUS APPROVAL #17-0227.15

A. DRAWINGS

1. None.

B. TESTS

1. Verification Test report on flexural testing on Precast Concrete Lintels Filled Models, total of (8) concrete lintel specimens, per ASTM E-529-94, prepared by FTL, Report No. 16-0425.08, dated 01/26/17, signed and sealed by Idalmis Ortega, P.E.

C. CALCULATIONS

1. None.

D. QUALITY ASSURANCE

1. By Miami-Dade County Department of Regulatory and Economic Resources (RER).

E. MATERIAL CERTIFICATION

1. None.

Helmy A. Makar, P.E., M.S.
Product Control Section Supervisor
NOA No. 20-0630.16
Expiration Date: 05/21/2022
Approval Date: 08/20/2020

NOTICE OF ACCEPTANCE: EVIDENCE SUBMITTED

10. EVIDENCE SUBMITTED UNDER PREVIOUS APPROVAL #17-0821.19

A. DRAWINGS

1. None.

B. TESTS

1. None.

C. CALCULATIONS

1. None.

D. QUALITY ASSURANCE

1. By Miami-Dade County Department of Regulatory and Economic Resources (RER).

E. MATERIAL CERTIFICATION

1. None.

F. OTHER

1. Letter from Cast-Crete USA, Inc., dated August 08, 2017, signed and sealed by Craig Parrino, P.E., certifying compliance with the Florida Building Code, 2017 Edition.

11. EVIDENCE SUBMITTED UNDER PREVIOUS APPROVAL #19-0130.13

A. DRAWINGS

1. Drawing No. FD8, titled "Cast-Crete 8" Lintel Fabrication Details", sheets 1 through 3 of 3, prepared by Craig Parrino, P.E., dated June 7, 1996, last revision dated June 12, 2014, signed and sealed by Craig Parrino, P.E., on January 22, 2019.

B. TESTS

1. None.

C. CALCULATIONS

1. None.

D. QUALITY ASSURANCE

1. By Miami-Dade County Department of Regulatory and Economic Resources (RER).

E. MATERIAL CERTIFICATION

1. None.

F. OTHER

1. Article of Conversion for a name change.

Helmy A. Makar, P.E., M.S.
Product Control Section Supervisor
NOA No. 20-0630.16
Expiration Date: 05/21/2022
Approval Date: 08/20/2020

NOTICE OF ACCEPTANCE: EVIDENCE SUBMITTED

12. NEW EVIDENCE SUBMITTED

A. DRAWINGS

1. None.

B. TESTS

1. None.

C. CALCULATIONS

1. None.

D. QUALITY ASSURANCE

1. By Miami-Dade County Department of Regulatory and Economic Resources (RER).

E. MATERIAL CERTIFICATION

1. None.

F. OTHER

1. Letter from Cast-Crete USA, Inc., dated August 08, 2017, signed and sealed by Craig Parrino, P.E., certifying compliance with the Florida Building Code, 2017 Edition.

2. Letter from Cast-Crete USA, Inc., dated June 11, 2020, signed and sealed by Craig Parrino, P.E., certifying compliance with the Florida Building Code, 2020 Edition.

Helmy A. Makar, P.E., M.S.
Product Control Section Supervisor
NOA No. 20-0630.16
Expiration Date: 05/21/2022
Approval Date: 08/20/2020

CAST-CRETE® HIGH STRENGTH PRECAST AND PRESTRESSED CONCRETE LINTELS

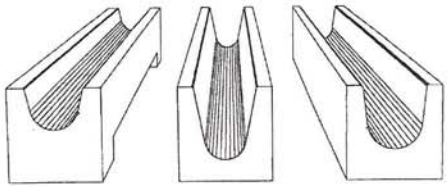

8" PRECAST W/ 2" RECESS DOOR U-LINTEL 8" PRECAST U-LINTEL 8" PRESTRESSED U-LINTEL

PRODUCT REVISED
as complying with the Florida Building Code
Acceptance No 20-0630.16
Expiration Date 05/21/2022
By Mimmi Dee Product Control

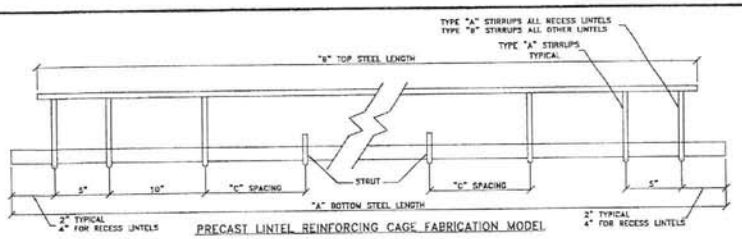

PRECAST LINTEL REINFORCING CAGE FABRICATION MODEL

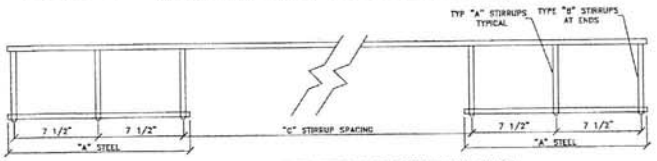

PRESTRESSED LINTEL REINFORCING CAGE FABRICATION MODEL

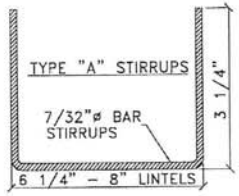

STIRRUP DETAILS
SCALE: N.T.S.

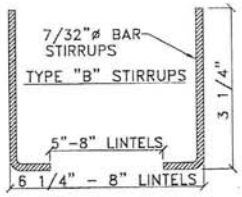

STIRRUP DETAILS
SCALE: N.T.S.

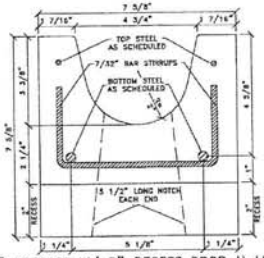

8" PRECAST W/ 2" RECESS DOOR U-LINTEL
SCALE: N.T.S.

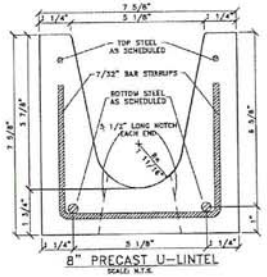

8" PRECAST U-LINTEL
SCALE: N.T.S.

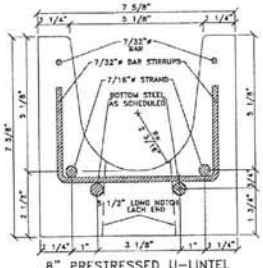

8" PRESTRESSED U-LINTEL
SCALE: N.T.S.

8" PRESTRESSED U-LINTEL DATA TABLE

LINTEL SIZE	VOLUME CY	WEIGHT LBS	"A" STEEL TYPE	"A" STEEL LENGTH	"B" TOP STEEL TYPE	"B" TOP STEEL LENGTH	"C" SPACING	NO. OF STIRRUPS
14'-8"	0.134	542	7/32 BAR	1'-3"	7/32 BAR	14'-6"	4 @ 3'-0"	9
15'-4"	0.140	567	7/32 BAR	1'-3"	7/32 BAR	15'-2"	4 @ 3'-2"	9
17'-4"	0.158	639	7/32 BAR	1'-3"	7/32 BAR	17'-2"	4 @ 3'-8"	9
19'-4"	0.176	713	7/32 BAR	1'-3"	7/32 BAR	19'-2"	4 @ 4'-2"	9
21'-4"	0.194	787	7/32 BAR #4 REBAR @ MIDSPAN	1'-3" 15'-0"	7/32 BAR	21'-2"	5 @ 3'-8 3/4"	10
22'-0"	0.200	811	7/32 BAR #4 REBAR @ MIDSPAN	1'-3" 16'-0"	7/32 BAR	21'-10"	5 @ 3'-10 3/8"	10
24'-0"	0.219	885	7/32 BAR #4 REBAR @ MIDSPAN	1'-3" 18'-0"	7/32 BAR	23'-10"	5 @ 4'-3 1/8"	10

8" PRECAST W/ 2" RECESS DOOR U-LINTEL DATA TABLE

LINTEL SIZE	OVERALL LENGTH	RECESS LENGTH	VOLUME CY	WEIGHT LBS	"A" BOTTOM STEEL TYPE	"A" BOTTOM STEEL LENGTH	"B" TOP STEEL TYPE	"B" TOP STEEL LENGTH	"C" SPACING	NO. OF STRUTS/ STIRRUPS
2'-8"	4'-4"	3'-0"	0.036	146	#3 REBAR	3'-10" PLUS HOOK	7/32 BAR	3'-8"	N/A	4
3'-0"	4'-6"	3'-4"	0.037	150	#3 REBAR	4'-0" PLUS HOOK	7/32 BAR	3'-10"	N/A	4
4'-0"	5'-8"	4'-4"	0.047	190	#3 REBAR	5'-2" PLUS HOOK	7/32 BAR	5'-0"	N/A	6
4'-4"	5'-10"	4'-8"	0.047	190	#3 REBAR	5'-2" PLUS HOOK	7/32 BAR	5'-2"	N/A	6
5'-0"	6'-8"	5'-4"	0.054	219	#4 REBAR	5'-10" PLUS HOOK	#3 REBAR	6'-0"	N/A	6
6'-0"	7'-6"	6'-4"	0.060	243	#4 REBAR	6'-10" PLUS HOOK	#3 REBAR	6'-10"	N/A	6
8'-0"	9'-8"	8'-4"	0.078	316	#4 REBAR	8'-10" PLUS HOOK	#3 REBAR	9'-0"	2'-0"	8

8" PRECAST U-LINTEL DATA TABLE

LINTEL SIZE	VOLUME CY	WEIGHT LBS	"A" BOTTOM STEEL TYPE	"A" BOTTOM STEEL LENGTH	"B" TOP STEEL TYPE	"B" TOP STEEL LENGTH	"C" SPACING	NO. OF STRUTS/ STIRRUPS
3'-6"	0.032	126	#3 REBAR	3'-5"	7/32 BAR	3'-2"	N/A	4
4'-0"	0.037	144	#3 REBAR	3'-11"	7/32 BAR	3'-8"	N/A	4
4'-6"	0.041	162	#3 REBAR	4'-5"	7/32 BAR	4'-2"	N/A	4
5'-4"	0.049	192	#3 REBAR	5'-3"	7/32 BAR	5'-0"	N/A	6
5'-10"	0.054	210	#3 REBAR	5'-9"	7/32 BAR	5'-6"	N/A	6
6'-6"	0.060	234	#4 REBAR	6'-5"	7/32 BAR	6'-2"	N/A	6
7'-6"	0.069	270	#4 REBAR	7'-5"	7/32 BAR	7'-2"	N/A	6
9'-4"	0.086	336	#4 REBAR	9'-3"	#3 REBAR	9'-0"	2'-0"	8
10'-6"	0.096	378	#4 REBAR	10'-5"	#3 REBAR	10'-2"	2'-0"	8
11'-4"	0.104	408	#5 REBAR	11'-3"	#3 REBAR	11'-0"	3'-0"	8
12'-0"	0.110	432	#5 REBAR	11'-11"	#3 REBAR	11'-8"	3'-0"	8
13'-4"	0.122	480	#5 REBAR	13'-3"	#3 REBAR	13'-0"	3'-0"	8
14'-0"	0.129	504	#5 REBAR	13'-11"	#3 REBAR	13'-8"	3'-0"	8

GENERAL NOTES:

1. REINFORCING STEEL: 7/32 BAR ASTM A510; #3, #4, & #5 REBAR GRADE 60 ASTM A615; 7/16 INCH DIAMETER 270KSI LOW-RELAXATION PRESTRESSING STRAND ASTM A416.
2. CONCRETE STRENGTHS: f'c = 6000 PSI FOR 8" PRESTRESSED LINTELS; f'c = 4000 PSI FOR ALL PRECAST 8 INCH LINTELS.
3. INITIAL PRESTRESS FORCE = 0.70 x fpu.
4. STRIPPING STRENGTH: PRESTRESSED LINTELS = 3500 PSI.
5. NOTE: THE TOTAL NUMBER OF STIRRUPS REQUIRED IS COUNTED STARTING FROM EACH END OF THE REINFORCING CAGE; FOR EXAMPLE – NO. OF STIRRUPS = 4, THEN THE REINFORCING CAGE MODEL SHOWS 2 STIRRUPS FROM EACH END.
6. 2.5 POUNDS OF POLYPROPYLENE FIBERS PER CU.YD. OF CONCRETE MAY BE USED IN LIEU OF PRESTRESSED LINTEL REINFORCING CAGE TO RESIST LIFTING AND HANDLING FORCES.

PRODUCT REVISED
as complying with the Florida Building Code
Acceptance No 19-0130.13
Expiration Date 05/21/2022
By Mimmi Dee Product Control

CRAIG PARRINO
6324 CR 579
SEFFNER, FL 33584
FL. P.E. LIC. NO. 44756

CRAIG PARRINO No. 44756 STATE OF FLORIDA PROFESSIONAL ENGINEER 1-22-19

THIS PROPRIETARY INFORMATION IS PROVIDED FOR PRODUCT APPROVAL. IT IS PROTECTED BY COPYRIGHT LAWS AND CANNOT BE REPRODUCED OR DISTRIBUTED WITHOUT THE PRIOR WRITTEN CONSENT OF CAST-CRETE USA, LLC.

NO.	BY	REVISION	DATE
4	CP	GENERAL REVISION NUMBER ONE	11/08/96
3	TO	GENERAL REVISION NUMBER TWO	1/28/03
2	CP	NAME CHANGE & SYNTHETIC FIBER OPTION	2/17/06
1	CP	GENERAL REVISION	6/12/14

MEMBER OF CMA NATIONAL CONCRETE MASONRY ASSOCIATION

CAST-CRETE® HIGH STRENGTH PRECAST AND PRESTRESSED CONCRETE LINTELS AND SILLS — CAST-CRETE, LLC. 6324 County Road 579 Seffner, Florida 33584 Phone: 813-621-4441

TITLE: CAST-CRETE 8" LINTEL FABRICATION DETAILS

FILE NAME:	DBSUB1-14	DRAWN BY:	CRAIG PARRINO, P.E. – REG. NO. 44756	SCALE:	NOT TO SCALE
DATE:	06/07/96	CHECKED BY:	CRAIG PARRINO, P.E. – REG. NO. 44756	DRAWING No.	F08 SHEET 1 OF 3

SAFE GRAVITY LOADS FOR 8" PRECAST & PRESTRESSED U-LINTELS

CAST-CRETE	SAFE LOAD - POUNDS PER LINEAR FOOT							
LENGTH \ TYPE	8U8	8F8-0B	8F12-0B	8F16-0B	8F20-0B	8F24-0B	8F28-0B	8F32-0B
		8F8-1B	8F12-1B	8F16-1B	8F20-1B	8F24-1B	8F28-1B	8F32-1B
3'-6" (42") PRECAST	2231	3069	3719	5163	6607	8054	9502	10951
		3069	4605	6113	7547	8974	10394	11809
4'-0" (48") PRECAST	1965	2561	2751	3820	4890	5961	7034	8107
		2693	4605	6113	7547	8974	10394	11809
4'-6" (54") PRECAST	1599	1969	2110	2931	3753	4576	5400	6224
		2189	4375	6113	7547 (7)	8672	10294	11809
5'-4" (64") PRECAST	1217	1349	1438	1999	2560	3123	3686	4249
		1663	3090	5365	7547 (26)	7342 (19)	8733 (19)	10127 (19)
5'-10" (70") PRECAST	1062	1105	1173	1631	2090	2549	3009	3470
		1451	2622	4360	7168 (48)	6026 (19)	7181 (19)	8328 (28)
6'-6" (78") PRECAST	908	1238	2177	3480	3031	3707	4383	5061
		1238	2177	3480	5381	8360	10394 (27)	8825 (14)
7'-6" (90") PRECAST	743	1011	1729	2632	2205	2698	3191	3685
		1011	1729	2661	3898	5681	8467 (44)	6472 (13)
9'-4" (112") PRECAST	554	699	1160	1625	2564	3486	2818	3302
		752	1245	1843	2564	3486	4705 (37)	6390 (47)
10'-6" (126") PRECAST	475	535	890	1247	2093	2777	2163	2536
		643	1052	1533	2093	2781	3643 (28)	4754 (45)
11'-4" (136") PRECAST	362	582	945	1366	1846	2423	3127	4006
		582	945	1366	1846	2423	3127	4006
12'-0" (144") PRECAST	337	540	873	1254	1684	2193	2805	3552
		540	873	1254	1684	2193	2805	3552
13'-4" (160") PRECAST	296	471	755	1075	1428	1838	2316	2883
		471	755	1075	1428	1838	2316	2883
14'-0" (168") PRECAST	279	424	706	1002	1326	1697	2127	2630
		442	706	1002	1326	1697	2127	2630
14'-8" (176") PRESTRESSED	N.R.	NR	NR	NR	NR	NR	NR	NR
		458	783	1370	1902	2245	2517	2712
15'-4" (184") PRESTRESSED	N.R.	NR	NR	NR	NR	NR	NR	NR
		412	710	1250	1733	2058	2320	2513
17'-4" (208") PRESTRESSED	N.R.	NR	NR	NR	NR	NR	NR	NR
		300	548	950	1326	1609	1849	2047
19'-4" (232") PRESTRESSED	N.R.	NR	NR	NR	NR	NR	NR	NR
		235	420	750	1037	1282	1515	1716
21'-4" (256") PRESTRESSED	N.R.	NR	NR	NR	NR	NR	NR	NR
		180	340	598	845	1114	1359	1468
22'-0" (264") PRESTRESSED	N.R.	NR	NR	NR	NR	NR	NR	NR
		165	315	550	784	1047	1285	1399
24'-0" (288") PRESTRESSED	N.R.	NR	NR	NR	NR	NR	NR	NR
		129	250	450	654	884	1092	1222

(#) THE NUMBERS IN PARENTHESIS ARE PERCENT REDUCTIONS FOR GRADE 40 FIELD ADDED REBAR. SEE GENERAL NOTE NO. 4 ON SHEET 3 OF 3.

SAFE LATERAL LOADS FOR 8" PRECAST & PRESTRESSED U-LINTELS

CAST-CRETE	SAFE LOAD PLF		
LENGTH \ TYPE	8U8	8F8	RCMU *
3'-6" (42") PRECAST	1025	1024	1598
4'-0" (48") PRECAST	765	763	1309
4'-6" (54") PRECAST	592	591	1073
5'-4" (64") PRECAST	411	411	745
5'-10" (70") PRECAST	340	339	616
6'-6" (78") PRECAST	507	721	490
7'-6" (90") PRECAST	424	534	363
9'-4" (112") PRECAST	326	512	230
10'-6" (126") PRECAST	284	401	180
11'-4" (136") PRECAST	260	452	154
12'-0" (144") PRECAST	244	402	137
13'-4" (160") PRECAST	217	324	110
14'-0" (168") PRECAST	205	293	100
14'-8" (176") PRESTRESSED	N.R.	284	91
15'-4" (184") PRESTRESSED	N.R.	259	83
17'-4" (208") PRESTRESSED	N.R.	194	64
19'-4" (232") PRESTRESSED	N.R.	148	52
21'-4" (256") PRESTRESSED	N.R.	125	42
22'-0" (264") PRESTRESSED	N.R.	116	40
24'-0" (288") PRESTRESSED	N.R.	91	33

* SEE GENERAL NOTE NO. 18 ON SHEET 3 OF 3.

PRODUCT REVISED
as complying with the Florida Building Code
Acceptance No. 20-0630.16
Expiration Date 05/21/2022
By Hedy A. Martin
Miami Dade Product Control

SAFE UPLIFT LOADS FOR 8" PRECAST & PRESTRESSED U-LINTELS

CAST-CRETE	SAFE LOAD - POUNDS PER LINEAR FOOT						
LENGTH \ TYPE	8F8-1T	8F12-1T	8F16-1T	8F20-1T	8F24-1T	8F28-1T	8F32-1T
	8F8-2T	8F12-2T	8F16-2T	8F20-2T	8F24-2T	8F28-2T	8F32-2T
3'-6" (42") PRECAST	1569	2655	3524	4394	5263	6132	7001
	1569	2655	3524	4394	5263	6132	7001
4'-0" (48") PRECAST	1363	2305	3060	3815	4570	5325	6079
	1363	2305	3060	3815	4570	5325	6079
4'-6" (54") PRECAST	1207	2040	2707	3375	4043	4711	5378
	1207	2040	2707	3375	4043	4711	5378
5'-4" (64") PRECAST	1016	1715 (11)	2276 (4)	2838	3399	3961	4522
	1016	1715	2276	2838	3399	3961	4522
5'-10" (70") PRECAST	909	1567 (16)	2080 (13)	2593 (9)	3107 (6)	3620 (4)	4133 (3)
	929	1567	2080	2593	3107	3620	4133
6'-6" (78") PRECAST	835 (12)	1407 (24)	1868 (21)	2329 (18)	2790 (16)	3251 (14)	3712 (12)
	835	1407	1868	2329	2790	3251	3712
7'-6" (90") PRECAST	727 (23)	1065 (39)	1624 (21)	2025 (28)	2426 (26)	2827 (25)	3228 (24)
	727	1224	1624	2025	2426	2827	3228
9'-4" (112") PRECAST	591	708 (28)	1136 (24)	1474 (24)	1815 (24)	2157 (24)	2500 (24)
	591	862	1318	1643	1969	2294	2619
10'-6" (126") PRECAST	530	575 (24)	916 (23)	1188 (23)	1461 (23)	1736 (23)	2011 (23)
	530	695	1180 (8)	1472 (4)	1763 (3)	2055	2346
11'-4" (136") PRECAST	474	504 (27)	800 (32)	1037 (32)	1274 (32)	1513 (35)	1753 (37)
	494	607	1042 (10)	1372 (11)	1643 (9)	1915 (8)	2187 (8)
12'-0" (144") PRECAST	470 (5)	458 (23)	724 (31)	938 (32)	1153 (32)	1369 (33)	1585 (32)
	470	550	940 (16)	1302 (15)	1560 (13)	1818 (11)	2075 (10)
13'-4" (160") PRECAST	418 (15)	386 (32)	607 (39)	785 (36)	964 (35)	1143 (34)	1323 (33)
	428	460	780 (8)	1159 (21)	1418 (20)	1653 (19)	1887 (17)
14'-0" (168") PRECAST	384 (33)	358 (31)	560 (29)	724 (30)	889 (30)	1054 (30)	1220 (29)
	410	425	717 (9)	1063 (31)	1358 (32)	1582 (32)	1807 (31)
14'-8" (176") PRESTRESSED	239	334 (31)	520 (29)	672 (29)	825 (29)	978 (29)	1131 (29)
	246	395	663 (3)	980 (29)	1303 (28)	1518 (25)	1734 (24)
15'-4" (184") PRESTRESSED	224	313 (29)	486 (28)	627 (29)	769 (29)	911 (29)	1054 (29)
	230	368	616 (8)	908 (26)	1240 (28)	1460 (27)	1668 (26)
17'-4" (208") PRESTRESSED	187	263 (18)	405 (24)	521 (27)	638 (27)	756 (27)	873 (27)
	192	306	506 (8)	740 (18)	1005 (27)	1271 (31)	1473 (31)
19'-4" (232") PRESTRESSED	162	229 (17)	348 (25)	447 (25)	547 (25)	647 (25)	747 (25)
	166	263	429 (9)	623 (18)	841 (24)	1059 (26)	1227 (30)
21'-4" (256") PRESTRESSED	142	204 (16)	307 (23)	393 (23)	480 (23)	568 (24)	655 (24)
	142	232	373 (7)	537 (17)	721 (23)	905 (26)	1048 (28)
22'-0" (264") PRESTRESSED	137	197 (19)	295 (22)	379 (23)	462 (23)	546 (23)	630 (23)
	137	223	358 (9)	513 (17)	688 (24)	863 (26)	999 (28)
24'-0" (288") PRESTRESSED	124	179 (14)	267 (21)	342 (21)	416 (21)	490 (21)	567 (22)
	124	202	319 (7)	455 (15)	606 (23)	756 (26)	906 (28)

(#) THE NUMBERS IN PARENTHESIS ARE PERCENT REDUCTIONS FOR GRADE 40 FIELD ADDED REBAR. SEE GENERAL NOTE NO. 4 ON SHEET 3 OF 3.

PRODUCT REVISED
as complying with the Florida Building Code
Acceptance No. 19-0130.13
Expiration Date 05/21/2022
By Hedy A. Martin
Miami Dade Product Control

CRAIG PARRINO
6324 CR 579
SEFFNER, FL 33584
FL. P.E. LIC. NO. 44756

CRAIG PARRINO LICENSE No. 44756 STATE OF FLORIDA PROFESSIONAL ENGINEER 1-22-19

SEE GENERAL NOTES – SHEET 3 OF 3

NO.	BY	REVISION	DATE
1	CP	GENERAL REVISION NUMBER ONE	11/08/96
2	CP	RECESS TYPE DESIGNATION	12/30/96
3	CP	8U8 11'-4" THRU 14'-0"	11/08/96
4	CP	GENERAL REVISION	4/28/98
5	CP	GENERAL REVISION	3/24/03
6	CP	NAME CHANGE	2/17/06
7	CP	GENERAL REVISION	6/12/14

MEMBER OF CMA NATIONAL CONCRETE MASONRY ASSOCIATION

CAST-CRETE HIGH STRENGTH PRECAST AND PRESTRESSED CONCRETE LINTELS AND SILLS — CAST-CRETE USA, LLC. 6324 County Road 579 Seffner, Florida 33584 Phone: 813-621-4841

TITLE: CAST-CRETE 8" LINTEL FABRICATION DETAILS

FILE NAME: D8SUB2-14	DRAWN BY: CRAIG PARRINO, P.E. – REG. NO. 44756	SCALE: NOT TO SCALE	
DATE: 06/07/95	CHECKED BY: CRAIG PARRINO, P.E. – REG. NO. 44756	DRAWING No. FD8	SHEET 2 OF 3

SAFE GRAVITY LOADS FOR 8" PRECAST w/ 2" RECESS DOOR U-LINTELS

CAST-CRETE		SAFE LOAD - POUNDS PER LINEAR FOOT						
TYPE / LENGTH	8RU6	8RF6-0B	8RF10-0B	8RF14-0B	8RF18-0B	8RF22-0B	8RF26-0B	8RF30-0B
		8RF6-1B	8RF10-1B	8RF14-1B	8RF18-1B	8RF22-1B	8RF26-1B	8RF30-1B
4'-4" (52") PRECAST	1635	1749	3355	3280	4349	5421	6493	7567
		1891	3699	5206	6639	8060	9479	10893
4'-6" (54") PRECAST	1494	1596	3053	2992	3968	4946	5924	6904
		1756	3699	5206	6639	8060	9479	10893
5'-8" (68") PRECAST	866	920	1770	1716	2277	2839	3402	3966
		1167	2481	4567	6389	8060 (34)	7917 (19)	9311 (18)
5'-10" (70") PRECAST	810	859	1653	1600	2124	2649	3174	3700
		1113	2342	4242	6639 (10)	8060 (31)	7402 (15)	8706 (19)
6'-8" (80") PRECAST	797	901	1825	3120	5048	7747	9448	7360
		901	1825	3120	5048	7915	9479	10893 (32)
7'-6" (90") PRECAST	669	755	1490	2459	3776	5743	7239	5623
		755	1490	2459	3776	5743	8998 (13)	10893 (45)
9'-8" (116") PRECAST	411	466	999	1568	2253	3129	4091	3146
		526	999	1568	2253	3129	4150	5891 (47)

(#) THE NUMBERS IN PARENTHESIS ARE PERCENT REDUCTIONS FOR GRADE 40 FIELD ADDED REBAR. SEE GENERAL NOTE NO. 4

SAFE LATERAL LOADS FOR 8" PRECAST w/ 2" RECESS DOOR U-LINTELS

CAST-CRETE	SAFE LOAD PLF		
TYPE / LENGTH	8RU6	8RF6	RCMU *
4'-4" (52") PRECAST	758	757	1164
4'-6" (54") PRECAST	694	693	1073
5'-8" (68") PRECAST	408	407	655
5'-10" (70") PRECAST	382	381	616
6'-8" (80") PRECAST	595	788	464
7'-6" (90") PRECAST	509	674	363
9'-8" (116") PRECAST	370	490	214

* SEE GENERAL NOTE 18

SAFE UPLIFT LOADS FOR 8" PRECAST w/ 2" RECESS DOOR U-LINTELS

CAST-CRETE	SAFE LOAD - POUNDS PER LINEAR FOOT						
TYPE / LENGTH	8RF6-1T	8RF10-1T	8RF14-1T	8RF18-1T	8RF22-1T	8RF26-1T	8RF30-1T
	8RF6-2T	8RF10-2T	8RF14-2T	8RF18-2T	8RF22-2T	8RF26-2T	8RF30-2T
4'-4" (52") PRECAST	905	1668	2362	3056	3751	4445	5140
	905	1668	2362	3056	3751	4445	5140
4'-6" (54") PRECAST	867	1604	2272	2939	3607	4275	4943
	867	1604	2272	2939	3607	4275	4943
5'-8" (68") PRECAST	675	1269 (16)	1797	2326 (5)	2854 (2)	3382	3911
	675	1269	1797	2326	2854	3382	3911
5'-10" (70") PRECAST	655	1207 (16)	1746 (11)	2259 (7)	2773 (3)	3286 (2)	2799 (1)
	655	1233	1746	2259	2773	3286	2799
6'-8" (80") PRECAST	570	929 (18)	1530 (22)	1980 (15)	2429 (16)	2879 (13)	3329 (14)
	570	1080	1530	1980	2429	2879	3329
7'-6" (90") PRECAST	506	742 (16)	1364 (30)	1765 (27)	2166 (25)	2567 (21)	2968 (23)
	506	898	1364	1765	2166	2567	2968
9'-8" (116") PRECAST	395	468 (15)	884 (32)	1222 (33)	1540 (34)	1859 (34)	2180 (34)
	395	560	1072	1388	1701	2016	2331

(#) THE NUMBERS IN PARENTHESIS ARE PERCENT REDUCTIONS FOR GRADE 40 FIELD ADDED REBAR. SEE GENERAL NOTE NO. 4

GENERAL NOTES

1) Materials:
   - f'c 8" precast lintel = 4000 psi
   - f'c prestressed lintel = 6000 psi
   - f'c grout = 3000 psi with maximum 3/8 inch aggregate
   - concrete masonry units (CMU) per ASTM C90 with minimum net area compressive strength = 1900 psi
   - rebar per ASTM A615 Grade 60
   - prestressing strand per ASTM A416 Grade 270 low relaxation
   - mortar per ASTM C270 Type M or S
2) All safe load tables based on minimum 4 inch nominal bearing.
   Exception: Safe loads for lintel type 8U8 and 8RU6 must be reduced by 20% if bearing length is less than 6 1/2 inches.
3) Provide full mortar bed and head joints.
4) The number in parenthesis indicates the percent reduction for grade 40 field added rebar.
   Example: 7'-6" Lintel 8F32-1B safe gravity load = 6472 (15) w/ 15% reduction → 6472 (.85) = 5501 plf
5) All lintels meet or exceed L/360 deflection.
   Exception: Prestress lintel type 8F8 17'-4" and longer meets or exceeds L/180 deflection.
   Use is limited to conditions meeting the Florida Building Code Sections 1604.3.1 as applicable
6) Shore filled lintels as required.
7) One #7 rebar may be substituted for two #5 rebars.
8) Installation/attachment of lintel must comply with the architectural and/or structural documents.
9) The designer may evaluate concentrated loads from the safe load tables by calculating the maximum resisting moment and shear at d-away from the face of support.
10) N.R. = Not Rated
11) Bottom field added rebar to be located at the bottom of the lintel cavity.
12) Lintels are manufactured with 5-1/2" long notches at the ends to accomodate vertical cell reinforcing and grouting.
13) The exterior surface of lintels installed in exterior concrete masonry walls shall have a coating of stucco applied in accordance with ASTM C-926 or other approved coating.
14) Lintels loaded simultaneously with vertical (gravity or uplift) and horizontal (lateral) loads should be checked for the combined loading with the following equation:

$$\frac{\text{Applied vertical load}}{\text{Safe vertical load}} + \frac{\text{Applied horizontal load}}{\text{Safe horizontal load}} \leq 1.0$$

15) For composite lintel heights not shown, use safe load from next lower height shown.
16) For lintel lengths not shown, use safe load from next longest length shown.
17) Safe loads are superimposed allowable loads.
18) Safe loads based on rational design analysis per ACI 530 and ACI 318
19) Additional lateral load capacity can be obtained by the designer by providing additional reinforced concrete masonry units (RCMU) above the lintel. See sketch below:

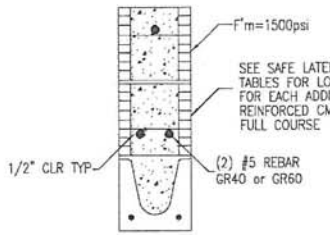

TYPE DESIGNATION

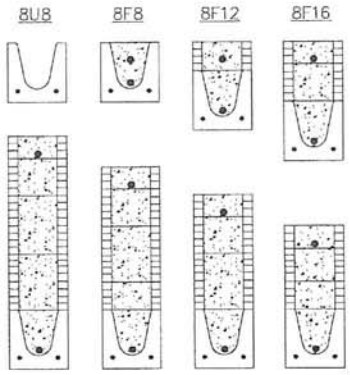

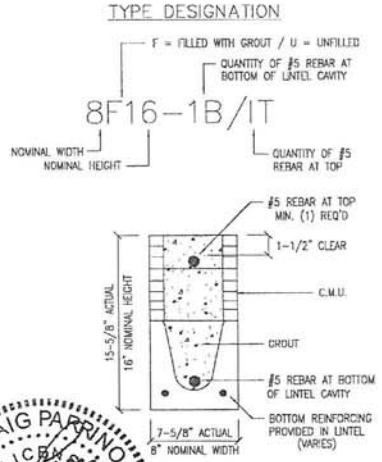

PRODUCT REVISED as complying with the Florida Building Code Acceptance No 20-0630.16 Expiration Date 05/21/2022 By Heba A. Mahfouz Miami Dade Product Control

PRODUCT REVISED as complying with the Florida Building Code Acceptance No 19-0130.13 Expiration Date 05/21/2022 By Heba A. Mahfouz Miami Dade Product Control

CRAIG PARRINO LICENSE No. 44756 STATE OF FLORIDA PROFESSIONAL ENGINEER 1-22-19

CRAIG PARRINO
6324 CR 579
SEFFNER, FL 33584
FL. P.E. LIC. NO. 44756

NO.	BY	REVISION	DATE
1	CP	GENERAL REVISION NUMBER ONE	11/08/96
2	CP	RECESS TYPE DESIGNATION	12/30/96
3	CP	8U8 11'-4" THRU 14'-0"	11/08/96
4	CP	GENERAL REVISION	4/28/98
5	CP	GENERAL REVISION	3/24/03
6	CP	NAME CHANGE	2/17/06
7	CP	GENERAL REVISION	6/12/14

MEMBER OF CMA NATIONAL CONCRETE MASONRY ASSOCIATION

CAST-CRETE HOLDINGS, L.L.C. HIGH STRENGTH PRECAST AND PRESTRESSED CONCRETE LINTELS AND SILLS 6324 County Road 579 Seffner, Florida 33584 Phone: 813-623-4641

TITLE: CAST-CRETE 8" LINTEL FABRICATION DETAILS

FILE NAME: DBSUB3-14	DRAWN BY: CRAIG PARRINO, P.E. - REG. NO. 44756	SCALE: NOT TO SCALE
DATE: 06/07/96	CHECKED BY: CRAIG PARRINO, P.E. - REG. NO. 44756	DRAWING No. FD8 SHEET 3 OF 3

STRUCTURAL CALCULATIONS

ADDITION TO RESIDENCE
LOCATED AT
200 N. SPLANADE DRIVE
MIAMI SPRINT, FLORIDA

PREPARED BY:

JOSE L. GUZMAN P.E.
4869 SW 75TH Ave, Miami, FL 33155
Tel.786.338.1082.

March 15, 2022

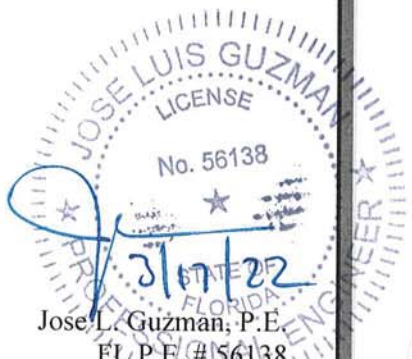

Jose L. Guzman, P.E.
FL P.E. # 56138

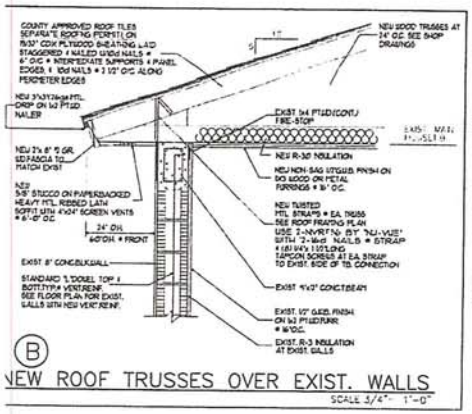

(B)
NEW ROOF TRUSSES OVER EXIST. WALLS
SCALE 3/4"= 1'-0"

GRAVITY & UPLIFT LOADS

A	GRAVITY: 3151# NET UPLIFT: 3251# USE 2-NVR7/16 BY "NU-VUE" WITH (2)-16d NAILS + STRAP + (8)1/4"x 1 1/2"LONG TAPCON SCREWS AT EA STRAP TO EXIST SIDE OF TB CONNECTION	E	GRAVITY: 2,756# NET UPLIFT: 2,756# USE (1)SPECIAL BRACKET SEE DETAIL SHEET A-3 ALSO USE AT OTHER SIDE
B	GRAVITY: 2,305# (DOUBLE STRAP) NET UPLIFT: 2,405# USE (1)-MAINTAINED BY "NU-VUE" WITH 12-16d NAILS & 2-STRAPS + 8-16d NAILS @ BEAM HOLA 2SD-E(NEW)	BB	GRAVITY: 2,385# (DOUBLE STRAP) NET UPLIFT: 2,495# USE 2-NVR7/16 BY "NU-VUE" WITH 12-16d NAILS + EACH STRAP + (8)1/4"x 1 1/2"LONG TAPCON SCREWS AT EA STRAP TO EXIST SIDE OF TB CONNECTION
C	GRAVITY: 1,120# NET UPLIFT: 1,240# USE 2-NVR7/16 BY "NU-VUE" WITH 12-16d NAILS + STRAP + (8)1/4"x 1 1/2"LONG TAPCON SCREWS AT EA STRAP TO EXIST SIDE OF TB CONNECTION		
D	GRAVITY: 3,515# NET UPLIFT: 3,515# USE (1)SPECIAL BRACKET SEE DETAIL SHEET A-3 ALSO USE AT OTHER SIDE		

I CERTIFY THIS IS BEING DESIGNED TO WITHSTAND 175 MPH WIND SPEED ACCORDING TO ASCE 7-16 AS REQUIRED BY THE FLORIDA BUILDING CODE REVISED 2020 EDITION 7th EDITION

BEAM SCHEDULE:

AT (8'-0" A.F.F.) -8"x12" CONCRETE BEAM WITH 4#5 CONT. & (2) 60° NG BENT BARS AT CORNERS. PROVIDE #3 TIES (4) FROM RNERS AT 12" REM. AT 48"O.C.
NEW TIE BEAMS TO MATCH EXISTING TB. ELEVATION
1 AT (8'-0" A.F.F.) -8"x12" CONCRETE BEAM WITH 2#5 TOP, 2#5 BOT TH (2) #5 60° LONG LONG BENT BARS AT CORNERS. PROVIDE #3 TIES (4) FROM RNERS AT 3" REM. AT 5 "O.C.

ROOF VENTILATION CALCULATIONS:
FOR TRUSS PORTION ONLY
(SOFFIT) (RIDGE)
OPTIONAL (NOT PROVIDED)
REQUIRED 1/150 VENT TO CEILING RATIO
NEW TRUSS ROOF AREA = 2,950 SQ. FT. "WITH OVERHANG"
2950/150 = 19.66 SQ. FT. OF VENTING AREA REQUIRED
DESIGN SELECTION: 4"X24" ALUM. SCREEN = 0.66 S.Q. FT.
TOTAL REQ'D. 19.66 S.Q. FT. / 0.66 = 30 PCS.
PROPOSED PROVIDED: 75 PCS.

FOR WOOD AND FRAMING NOTES SEE SHEET A-3

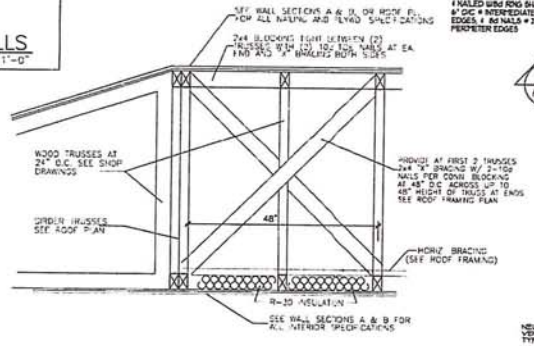

TYP. CROSS BRACING SECTION
SCALE: 3/4"= 1'-0"

-14 R9.7.7
ERIOR PERIMETER BEAMS
least one-quarter maximum positive t reinforcement, t less than two r strands, shall tinuous. (b) dinal rement shall be d by closed in accordance 3.7.1.6 or hoops the clear span of am.

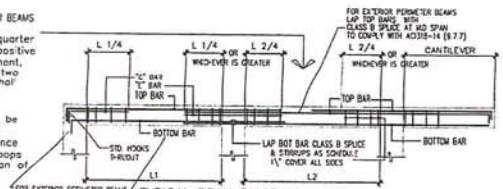

TYPICAL BEAM DIAGRAM
"C" BARS - ARE TOP BARS AT NON-CONTINUOUS ENDS
"L" BARS - ARE TOP BARS OVER RIGHT INTERIOR SUPPORTS
TOP BARS - CALLED FOR AS CONTINUOUS, WHEN SPLICED, SHALL BE SPLICED IN THE MIDDLE THIRD OF THE SPAN

WOOF TRUSS ROOF DESIGN LOADS:

T.C.L.L.	= 30 P.S.F.
T.C.D.L.	= 15 P.S.F.
B.C.D.L.	= 10 P.S.F.
TOTAL	= 55 P.S.F.

THIS IS A ROOF TRUSS TYPE SYSTEM

NOTE: ROOF TRUSS SHOP DRAWINGS AND ENGINEERING PACKAGE TO BE SUBMITTED AND PROCESSED UNDER A SEPARATE PERMIT.

NOTE: ALL NEW ROOFING SYSTEM MATERIALS TO HAVE A VALID N.O.A. PRODUCT APPROVALS & TO BE SUBMITTED FOR REVIEW AT TIME OF ROOFING PERMIT APPLICATION UNDER SEPARATE SUB PERMIT

NOTE: ALL EXTERIOR WALL COVERING AND ROOF ASSEMBLIES AND ROOF TOP STRUCTURES SHALL COMPLY WITH HI-VELOCITY HURRICANE ZONE AS PER CHAPTER 44, R4401 1 & R4402 1 OF THE F.B.C. RESIDENTIAL 2020 -7th EDITION

NOTE: GENERAL CONTRACTOR TO FIELD VERIFY ALL EXISTING FIELD CONDITIONS & DIMENSIONS WITH ALL PROPOSED NEW CONSTRUCTION PRIOR TO ANY NEW CONSTRUCTION / INSTALLATION OR INSTALLATIONS INCLUDING BUT NOT LIMITED TO NEW TRUSS SIZES PITCH LENGTHS DIMENSIONS ETC

NOTE: FOR ALL STRAPS SPECIFIED SEE SPLICES ON PRODUCT APPROVAL ATTACHED ALL STRAPS TO BE BY "SIMPSON" OR APPROVED EQUAL

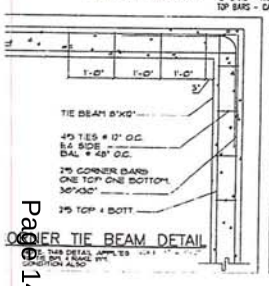

CORNER TIE BEAM DETAIL

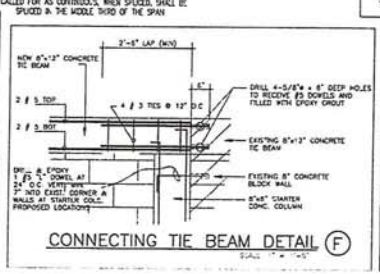

CONNECTING TIE BEAM DETAIL (F)

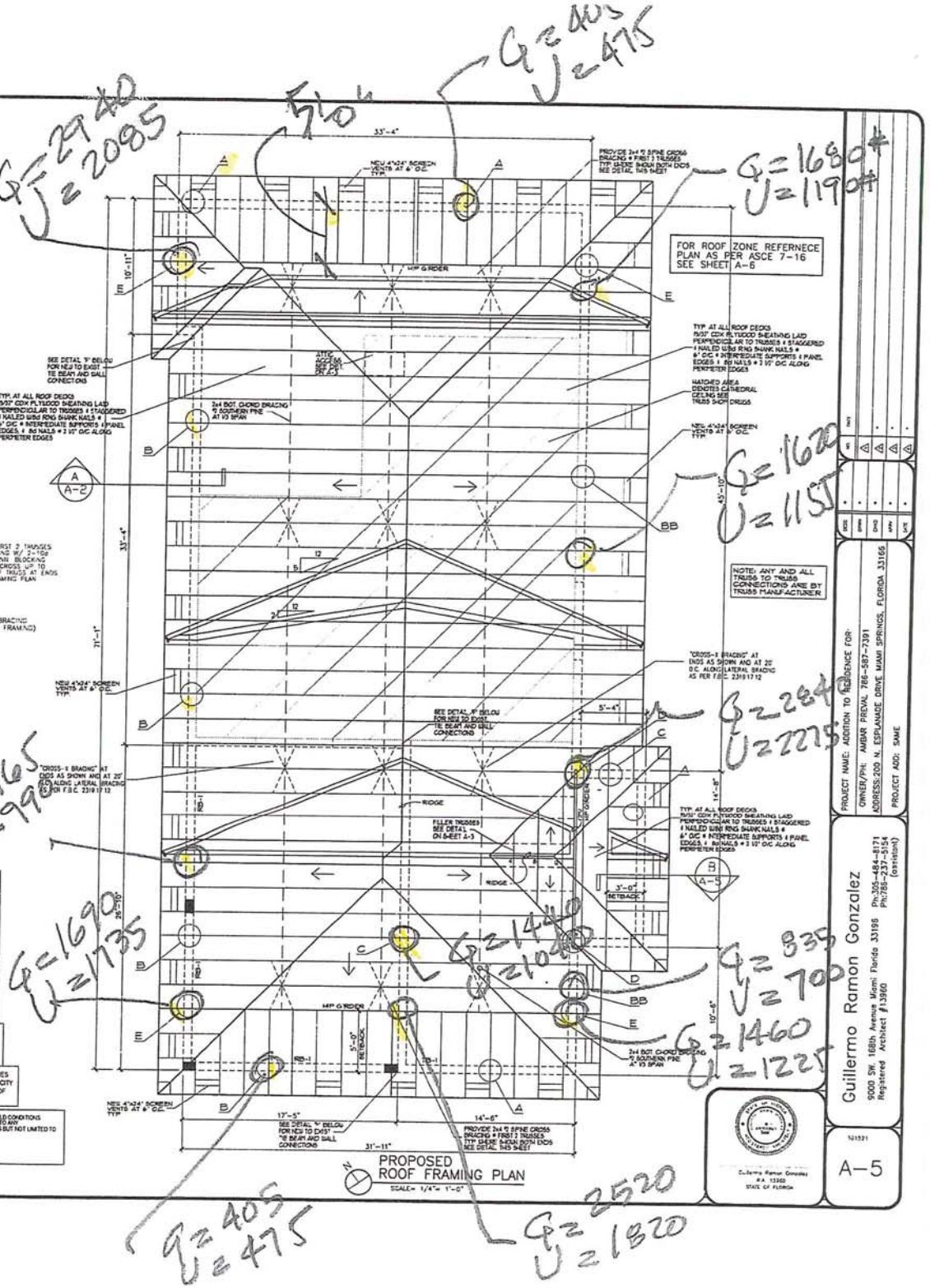

PROJECT NAME: ADDITION TO RESIDENCE FOR:
OWNER/PH#: AMBAR PRIVAL 786-587-7391
ADDRESS:200 N. ESPLANADE DRIVE MIAMI SPRINGS, FLORIDA 33166
PROJECT ADD: SAME

Guillermo Ramon Gonzalez
9000 SW. 168th Avenue Miami Florida 33196
Registered Architect #13960
Ph:305-484-8171
Ph:786-237-5154 (assistant)

121521
A-5

JOSE GUZMAN P.E.
16581 SW 64 terrace
MIAMI, FLORIDA
786-338-1082
JGUZMANALBA@AOL.COM

JOB _____

SHEET NO. _____ OF _____

CALCULATED BY _____ DATE _____

CHECKED BY _____ DATE _____

SCALE _____

ROOF UPLIFT / GRAVITY.

① (36-10)2 = 52'

2-0 △ 33'-4" △ 2-0 (91-10)2 = 162

$U = \frac{33.33}{2} \cdot 52 + 162 \times 2 = 1190\#$

$Q = \left(\frac{33.33}{2} + 2\right)90 = 1680\#$

②

2-0 △ 31-11 △ 2-0

$U = \frac{31.92}{2} \cdot 52 + 162 \times 2 = 1155\#$

$Q = \left(\frac{31.92}{2} + 2\right)90 = 1620\#$

③ 162 (40-10)2 = 76 52 162

1 17-5 2 14-6 3

$U_1 = 2 \times 162 + \frac{17.42}{2} \cdot 76 = 990$

$U_2 = \frac{17.42}{2} \times 76 + \frac{14.5}{2} 52 = 1040$

$U_3 = \frac{14.5}{2} \cdot 52 + 2 \times 162 = 700$

JOSE GUZMAN P.E.
16581 SW 64 terrace
MIAMI, FLORIDA
786-338-1082
JGUZMANALBA@AOL.COM

JOB _____

SHEET NO. _____ OF _____

CALCULATED BY _____ DATE _____

CHECKED BY _____ DATE _____

SCALE _____

(3) CONT.

$G_1 = \left(\frac{17.42}{2} + 2\right) 90 = 965$

$G_2 = \frac{17.5 + 14.5}{2} \cdot 90 = 1440$

$G_3 = \left(\frac{14.5}{2} + 2\right) 90 = 835$ #

(4)

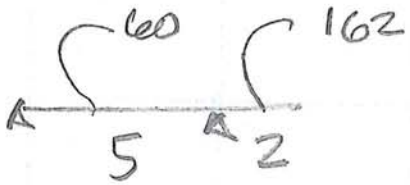

$V\ 2.5 \times 60 + 2 \times 162 = 475$

$G = 4.5 \times 90 = 405$

(5)

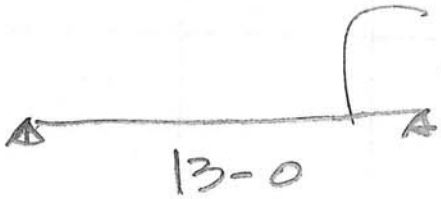

$V = 19.42/2 \times 36 = 350$

$G = \times 45 = 437$

$V = 350 \times 6.5 = 2275$ #

$G = 437 \times 6.5 = 2840$ #

JOSE GUZMAN P.E.
16581 SW 64 terrace
MIAMI, FLORIDA
786-338-1082
JGUZMANALBA@AOL.COM

JOB _____

SHEET NO. _____ OF _____

CALCULATED BY _____ DATE _____

CHECKED BY _____ DATE _____

SCALE _____

AT OPEN AREA.

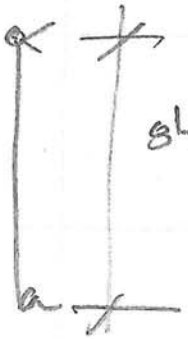

$8'-2 + 0.67 = 8'-10''$

wind load = 61.61

CLOSED AREAS



$8'-10''$ wind load = 49.1 psf

Rev: 580000
User: KW-0603515, Ver 5.8.0, 1-Dec-2003
(c)1983-2003 ENERCALC Engineering Software

Masonry Wall Design

Description

General Information

Code Ref: ACI 530-02

Wall Height	8.83 ft	Seismic Factor	0.0000	f'm	1,500.0 psi
Parapet Height	0.00 ft	Calc of Em = f'm *	900.00	Fs	24,000.0 psi
		Duration Factor	1.000	Special Inspection	
Thickness	8.0 in	Wall Wt Mult.	1.000	Grout @ Rebar Only	
Rebar Size	5			Normal Weight Block	
Rebar Spacing	40 in			Equivalent	
Depth to Rebar	3.810 in @ Center			Solid Thickness	4.700 in

Loads

Uniform Load		Concentric Axial Load		Wind Load	61.610 psf
Dead Load	0.000 #/ft	Dead Load	0.000 #/ft		
Live Load	0.000 #/ft	Live Load	0.000 #/ft		
Load Eccentricity	0.000 in	Roof Load			
Roof Load					

Design Values

E	1,350,000 psi	Rebar Area	0.093 in2	np	0.04370	j	0.91495
n : Es / Em	21.481	Radius of Gyration	2.521 in	k	0.25514	2 / kj	8.56756
Wall Weight	56.000 psf	Moment of Inertia	358.350 in4				

Max Allow Axial Stress = 0.25 f'm (1-(h/140r)^2) * SpInsp — 341.19 psi
Allow Masonry Bending Stress = 0.33 f'm * SpInsp = — 495.00 psi
Allow Steel Bending Stress = — 24,000.00 psi

Load Combination & Stress Details Summary

	Moment in-#	Axial Load lbs	Bending Stresses Steel psi	Bending Stresses Masonry psi	Axial Compression psi
Top of Wall					
DL + LL	0.0	0.0	0.0	0.0	0.00
DL + LL + Wind	0.0	0.0	0.0	0.0	0.00
DL + LL + Seismic	0.0	0.0	0.0	0.0	0.00
Between Base & Top of Wall					
DL + LL	0.0	247.2	0.0	0.0	4.38
DL + LL + Wind	7,205.5	247.2	22,225.7	354.4	4.38
DL + LL + Seismic	0.0	247.2	0.0	0.0	4.38

Summary

8.83ft high wall with 0.00ft parapet, Normal Block w/ 8.00in wall w/ #5 bars at 40.00ino.c. at center

Max. Bending Compressive Stress	358.78	OK
Allowable	495.00	OK
Max. Axial Only Compressive Stress	4.38	psi
Allowable	341.19	OK
Max Steel Bending Stress	22,225.75	psi
Allowable	24,000.00	OK

Description

Final Loads & Moments

Wall Weight moment @ Mid Ht	247.24 lbs	Wind Moment @ Mid Ht	7,205.49 in-#
		Seismic Moment @ Mid Ht	0.00 in-#
Dead Load Moment @ Top of Wall	0.00 in-#		
Dead Load Moment @ Mid Ht	0.00 in-#	Total Dead Load	0.00 lbs
		Total Live Load	0.00 lbs
Live Load Moment @ Top of Wall	0.00 in-#		
LiveLoad Moment @ Mid Ht	0.00 in-#		
Maximum Allow Moment for Applied Axial Load =		7,780.70 in-#	
Maximum Allow Axial Load for Applied Moment =		19,243.18 lbs	

MecaWind v2403

Software Developer: Meca Enterprises Inc., www.meca.biz, Copyright © 2020

Calculations Prepared by:
True
Address
City, State,
Date: Mar 13, 2022
Designer: 0

Calculations Prepared For:
Client: 0
Project #: 0
Location: 0

File Location : H:\0-ALFONSO\AMBER PRIVAL\CLOSED.wnd

Basic Wind Parameters

Wind Load Standard	= ASCE 7-16	Exposure Category	= C
Wind Design Speed	= 175.0 mph	Risk Category	= II
Structure Type	= Building	Building Type	= Enclosed

General Wind Settings

Incl_LF	= Include ASD Load Factor of 0.6 in Pressures	= True
DynType	= Dynamic Type of Structure	= Rigid
Zg	= Altitude (Ground Elevation) above Sea Level	= 0.000 ft
Bdist	= Base Elevation of Structure	= 0.000 ft
SDB	= Simple Diaphragm Building	= True
MWFRSType	= MWFRS Method Selected	= Ch 27 Pt 1

Topographic Factor per Fig 26.8-1

Topo	= Topographic Feature	= None
Kzt	= Topographic Factor	= 1.000

Building Inputs

RoofType:	Building Roof Type	= Hipped	W :	Width Perp to Ridge	= 34.000 ft
L :	Length Along Ridge	= 71.000 ft	EHt :	Eave Height	= 8.500 ft
Hip :	Ridge Hipped Length	= 4.000 ft	RE :	Roof Entry Method	= Slope
Slope :	Slope of Roof	= 5.0 :12	Theta :	Roof Slope	= 22.62 Deg
Par :	Is there a Parapet	= False			

Exposure Constants per Table 26.11-1:

Alpha:	Table 26.11-1 Const	= 9.500	Zg:	Table 26.11-1 Const	= 900.000 ft
At:	Table 26.11-1 Const	= 0.105	Bt:	Table 26.11-1 Const	= 1.000
Am:	Table 26.11-1 Const	= 0.154	Bm:	Table 26.11-1 Const	= 0.650
C:	Table 26.11-1 Const	= 0.200	Eps:	Table 26.11-1 Const	= 0.200

Overhang Inputs:

Std	= Overhangs on all sides are the same	= True
OHType	= Type of Roof Wall Intersections	= Sofit
OH	= Overhang of Roof Beyond Wall	= 2.000 ft

Main Wind Force Resisting System (MWFRS) Calculations per Ch 27 Part 1:

h	= Mean Roof Height above grade	= 12.458 ft
Kh	= Z < 15 ft [4.572 m]--> (2.01 * (15/zg)^(2/Alpha) {Table 26.10-1}	= 0.849
Kzt	= Topographic Factor is 1 since no Topographic feature specified	= 1.000
Kd	= Wind Directionality Factor per Table 26.6-1	= 0.85
Zg	= Elevation above Sea Level	= 0.000 ft
Ke	= Ground Elevation Factor: Ke = e^-(0.0000362*Zg) {Table 26.9-1}	= 1.000
GCPi	= Ref Table 26.13-1 for Enclosed Building	= +/-0.18
RA	= Roof Area	= 2701.43 sq ft
LF	= Load Factor based upon ASD Design	= 0.60
qh	= (0.00256 * Kh * Kzt * Kd * Ke * V^2) * LF	= 33.94 psf
qin	= For Negative Internal Pressure of Enclosed Building use qh*LF	= 33.94 psf
qip	= For Positive Internal Pressure of Enclosed Building use qh*LF	= 33.94 psf

Gust Factor Calculation:

Gust Factor Category I Rigid Structures - Simplified Method		
G1	= For Rigid Structures (Nat. Freq.>1 Hz) use 0.85	= 0.85
Gust Factor Category II Rigid Structures - Complete Analysis		
Zm	= Max(0.6 * Ht, Zmin)	= 15.000 ft
Izm	= Cc * (33 / Zm) ^ 0.167	= 0.228
Lzm	= L * (Zm / 33) ^ Eps	= 427.057
Q	= (1 / (1 + 0.63 * ((B + Ht) / Lzm)^0.63))^0.5	= 0.930

G2	= 0.925*((1+0.7*Izm*3.4*Q)/(1+0.7*3.4*Izm))	
Gust Factor Used in Analysis		= 0.888
G	= Lessor Of G1 Or G2	= 0.850

MWFRS Wind Normal to Ridge (Ref Fig 27.3-1)

h	= Mean Roof Height Of Building	= 12.458 ft
RHt	= Ridge Height Of Roof	= 16.417 ft
B	= Horizontal Dimension Of Building Normal To Wind Direction	= 71.000 ft
L	= Horizontal Dimension Of building Parallel To Wind Direction	= 34.000 ft
L/B	= Ratio Of L/B used For Cp determination	= 0.479
h/L	= Ratio Of h/L used For Cp determination	= 0.366
Slope	= Slope of Roof	= 22.62 Deg
OH_Top_+Y	= Overhang Top +Y (Leeward)	= -0.6, -0.6
OH_Top_-Y	= Overhang Top Windward Edge	= 0.18, -0.29
OH_X	= Overhang Top +/-X Coeff (0 to h/2) (0.000 ft to 2.000 ft)	= -0.18, -0.9
OH_X	= Overhang Top +/-X Coeff (0 to h/2) (2.000 ft to 6.229 ft)	= -0.18, -0.9
OH_X	= Overhang Top +/-X Coeff (h/2 to h) (6.229 ft to 12.458 ft)	= -0.18, -0.9
OH_X	= Overhang Top +/-X Coeff (h to 2h) (12.458 ft to 19.000 ft)	= -0.18, -0.5
OH_X	= Overhang Top +/-X Coeff (h to 2h) (19.000 ft to 24.917 ft)	= -0.18, -0.5
OH_X	= Overhang Top +/-X Coeff (>2h) (>24.917 ft)	= -0.18, -0.3
OH_X	= Overhang Top +/-X Coeff (>2h) (>36.000 ft)	= -0.18, -0.3
Roof_LW	= Roof (Leeward)	= -0.6, -0.6
Roof_WW	= Roof (Windward)	= 0.18, -0.29
Roof_X	= Roof +/-X Coeff (0 to h/2) (2.000 ft to 6.229 ft)	= -0.18, -0.9
Roof_X	= Roof +/-X Coeff (h/2 to h) (6.229 ft to 12.458 ft)	= -0.18, -0.9
Roof_X	= Roof +/-X Coeff (h to 2h) (12.458 ft to 24.917 ft)	= -0.18, -0.5
Roof_X	= Roof +/-X Coeff (>2h) (>24.917 ft)	= -0.18, -0.3
Sofit_-Y	= Overhang Sofit -Y	= 0.8, 0.8

Cp_WW	= Windward Wall Coefficient (All L/B Values)	= 0.80
Cp_LW	= Leward Wall Coefficient using L/B	= -0.50
Cp_SW	= Side Wall Coefficient (All L/B values)	= -0.70
GCpn_WW	= Parapet Combined Net Pressure Coefficient (Windward Parapet)	= 1.50
GCpn_LW	= Parapet Combined Net Pressure Coefficient (Leeward Parapet)	= -1.00

Wall Wind Pressures based On Positive Internal Pressure (+GCPi) - Normal to Ridge
All wind pressures include a load factor of 0.6

Elev ft	Kz	Kzt	qz psf	GCPi	Windward Press psf	Leeward Press psf	Side Press psf	Total Press psf	Minimum Pressure* psf
8.50	0.849	1.000	33.94	0.18	16.97	-20.53	-26.30	37.51	9.60

Wall Wind Pressures based on Negative Internal Pressure (-GCPi) - Normal to Ridge
All wind pressures include a load factor of 0.6

Elev ft	Kz	Kzt	qz psf	GCPi	Windward Press psf	Leeward Press psf	Side Press psf	Total Press psf	Minimum Pressure* psf
8.50	0.849	1.000	33.94	-0.18	29.19	-8.32	-14.09	37.51	9.60

Notes Wall Pressures:

Kz	= Velocity Press Exp Coeff	Kzt	= Topographical Factor
qz	= 0.00256*Kz*Kzt*Kd*V^2	GCPi	= Internal Press Coefficient
Side	= qh * G * Cp_SW - qip * +GCPi	Windward	= qz * G * Cp_WW - qip * +GCPi
Leeward	= qh * G * Cp_LW - qip * +GCPi	Total	= Windward Press - Leeward Press

* Minimum Pressure: Para 27.1.5 no less than 9.60 psf (Incl LF) applied to Walls
\+ Pressures Acting TOWARD Surface - Pressures Acting AWAY from Surface

Roof Wind Pressures for Positive & Negative Internal Pressure (+/- GCPi) - Normal to Ridge
All wind pressures include a load factor of 0.6

Roof Var	Start Dist ft	End Dist ft	Cp_min	Cp_max	GCPi	Pressure Pn_min* psf	Pressure Pp_min* psf	Pressure Pn_max psf	Pressure Pp_max psf
OH_Top_+Y	N/A	N/A	-0.600	-0.600	0.180	-11.20	-23.42	-11.20	-23.42
OH_Top_+Y	N/A	N/A	-0.600	-0.600	0.180	-11.20	-23.42	-11.20	-23.42

OH_Top_-Y	N/A	N/A	0.180	-0.290	0.180	11.30	-0.92	-2.26	-14.48
OH_Top_-Y	N/A	N/A	0.180	-0.290	0.180	11.30	-0.92	-2.26	-14.48
OH_X (+X)	0.000	2.000	-0.180	-0.900	0.180	0.92	-11.30	-19.86	-32.07
OH_X (-X)	0.000	2.000	-0.180	-0.900	0.180	0.92	-11.30	-19.86	-32.07
OH_X (+X)	2.000	6.229	-0.180	-0.900	0.180	0.92	-11.30	-19.86	-32.07
OH_X (-X)	2.000	6.229	-0.180	-0.900	0.180	0.92	-11.30	-19.86	-32.07
OH_X (+X)	6.229	12.458	-0.180	-0.900	0.180	0.92	-11.30	-19.86	-32.07
OH_X (-X)	6.229	12.458	-0.180	-0.900	0.180	0.92	-11.30	-19.86	-32.07
OH_X (+X)	12.458	19.000	-0.180	-0.500	0.180	0.92	-11.30	-8.32	-20.53
OH_X (-X)	12.458	19.000	-0.180	-0.500	0.180	0.92	-11.30	-8.32	-20.53
OH_X (+X)	19.000	24.917	-0.180	-0.500	0.180	0.92	-11.30	-8.32	-20.53
OH_X (-X)	19.000	24.917	-0.180	-0.500	0.180	0.92	-11.30	-8.32	-20.53
OH_X (+X)	24.917	36.000	-0.180	-0.300	0.180	0.92	-11.30	-2.55	-14.76
OH_X (-X)	24.917	36.000	-0.180	-0.300	0.180	0.92	-11.30	-2.55	-14.76
OH_X (+X)	36.000	38.000	-0.180	-0.300	0.180	0.92	-11.30	-2.55	-14.76
OH_X (-X)	36.000	38.000	-0.180	-0.300	0.180	0.92	-11.30	-2.55	-14.76
Roof_LW	N/A	N/A	-0.600	-0.600	0.180	-11.20	-23.42	-11.20	-23.42
Roof_WW	N/A	N/A	0.180	-0.290	0.180	11.30	-0.92	-2.26	-14.48
Roof_X (+X)	2.000	6.229	-0.180	-0.900	0.180	0.92	-11.30	-19.86	-32.07
Roof_X (-X)	2.000	6.229	-0.180	-0.900	0.180	0.92	-11.30	-19.86	-32.07
Roof_X (+X)	6.229	12.458	-0.180	-0.900	0.180	0.92	-11.30	-19.86	-32.07
Roof_X (-X)	6.229	12.458	-0.180	-0.900	0.180	0.92	-11.30	-19.86	-32.07
Roof_X (+X)	12.458	24.917	-0.180	-0.500	0.180	0.92	-11.30	-8.32	-20.53
Roof_X (-X)	12.458	24.917	-0.180	-0.500	0.180	0.92	-11.30	-8.32	-20.53
Roof_X (+X)	24.917	36.000	-0.180	-0.300	0.180	0.92	-11.30	-2.55	-14.76
Roof_X (-X)	24.917	36.000	-0.180	-0.300	0.180	0.92	-11.30	-2.55	-14.76
Sofit_-Y	N/A	N/A	0.800	0.800	0.180	29.19	16.97	29.19	16.97

Notes Roof Pressures:
Start Dist = Start Dist from Windward Edge End Dist = End Dist from Windward Edge
Cp_Max = Largest Coefficient Magnitude Cp_Min = Smallest Coefficient Magnitude
Pp_max = qh*G*Cp_max - qip*(+GCPi) Pn_max = qh*G*Cp_max - qin*(-GCpi)
Pp_min* = qh*G*Cp_min - qip*(+GCPi) Pn_min* = qh*G*Cp_min - qin*(-GCPi)
OH = Overhang X = Dir along Ridge Y = Dir Perpendcular to Ridge Z = Vertical
* The smaller uplift pressures due to Cp_Min can become critical when wind is combined with roof live load or snow load; load combinations are given in ASCE 7
+ Pressures Acting TOWARD Surface - Pressures Acting AWAY from Surface

MWFRS Wind Parallel to Ridge (Ref Fig 27.3-1)

h	= Mean Roof Height Of Building	= 12.458 ft
RHt	= Ridge Height Of Roof	= 16.417 ft
B	= Horizontal Dimension Of Building Normal To Wind Direction	= 34.000 ft
L	= Horizontal Dimension Of building Parallel To Wind Direction	= 71.000 ft
L/B	= Ratio Of L/B used For Cp determination	= 2.088
h/L	= Ratio Of h/L used For Cp determination	= 0.175
Slope	= Slope of Roof	= 22.62 Deg
Hip_End	= Hipped End Coeff (0 to h/2) (2.000 ft to 6.229 ft)	= -0.18, -0.9
Hip_End	= Hipped End Coeff (h/2 to h) (6.229 ft to 12.458 ft)	= -0.18, -0.9
Hip_End	= Hipped End Coeff (h to 2h) (12.458 ft to 24.917 ft)	= -0.18, -0.5
Hip_End	= Hipped End Coeff (>2h) (>24.917 ft)	= -0.18, -0.3
Hip_End	= Hipped End Coeff (>2h) (>39.500 ft)	= -0.18, -0.3
OH_Bot	= Sofit (Windward Face Only)	= 0.8, 0.8
OH_Top	= Overhang Top Coeff (0 to h/2) (0.000 ft to 2.000 ft)	= -0.18, -0.9
OH_Top	= Overhang Top Coeff (0 to h/2) (2.000 ft to 6.229 ft)	= -0.18, -0.9
OH_Top	= Overhang Top Coeff (h/2 to h) (6.229 ft to 12.458 ft)	= -0.18, -0.9
OH_Top	= Overhang Top Coeff (h to 2h) (12.458 ft to 24.917 ft)	= -0.18, -0.5
OH_Top	= Overhang Top Coeff (>2h) (>24.917 ft)	= -0.18, -0.3
OH_Top	= Overhang Top Coeff (>2h) (>37.500 ft)	= -0.18, -0.3
OH_Top	= Overhang Top Coeff (>2h) (>73.000 ft)	= -0.18, -0.3
Roof	= Roof Coeff (0 to h/2) (2.000 ft to 6.229 ft)	= -0.18, -0.9
Roof	= Roof Coeff (h/2 to h) (6.229 ft to 12.458 ft)	= -0.18, -0.9
Roof	= Roof Coeff (h to 2h) (12.458 ft to 24.917 ft)	= -0.18, -0.5
Roof	= Roof Coeff (>2h) (>24.917 ft)	= -0.18, -0.3
Cp_WW	= Windward Wall Coefficient (All L/B Values)	= 0.80
Cp_LW	= Leward Wall Coefficient using L/B	= -0.30
Cp_SW	= Side Wall Coefficient (All L/B values)	= -0.70
GCpn_WW	= Parapet Combined Net Pressure Coefficient (Windward Parapet)	= 1.50
GCpn_LW	= Parapet Combined Net Pressure Coefficient (Leeward Parapet)	= -1.00

Wall Wind Pressures based On Positive Internal Pressure (+GCPi) - Parallel to Ridge

Guillermo Ramon Gonzalez RA

9000 SW. 168th Ave. Miami, Florida 33196
Telephone: (305) 484-8171

Miami Springs Building Department
201 Westward Drive
Miami Springs, Florida 33166

October 4, 2023

Owner: Ambar Preval
Project Address: 200 N. Esplanade Drive Miami Springs, Florida 33166
Application Number: 21-1143

Architect's Certification

This is to certify that I, Guillermo Ramon Gonzalez, visited the site and inspected the installation of the following components under the permit number stated above. The methodology utilized consisted in visual inspection performed on site with client & truss installer.

1-The truss placement and installation for trusses over 35' long or 6' high as per CMDC section 8-22 special inspector from.

A- The installation of the trusses was done according to the F.B.C. Truss plates and straps were inspected for proper code compliance and structural integrity. The installations of the trusses and straps reflects what is shown on the approved plans including the nailing and tapcons screws of the straps to the sides of existing tie beams in addition to the embedded straps.

Thus I hereby certify that all work including the items A mentioned above were found to be functional and in accordance with the approved plans and "F.B.C." 2020 -7th Edition.

Respectfully.

RA.# 13960
License Number

Signature, Seal and Date
Guillermo Ramon Gonzalez

Guillermo Ramon Gonzalez RA.

9000 SW. 168th Avenue.
Miami, Florida 33196
Telephone: (305) 484-8171

City of Miami Springs Building Department
201 Westward Drive
Miami Springs, Florida 33166

June 13, 2022

Owner: Ambar Preval
Project Address: 200 N. Esplanade Drive Miami Springs, Florida 33166
Application Number: 21-1143

In Site Bearing Capacity Per F.B.C. 2020-7th Edition

Dear Sir,

I hereby attest that the site has been observed and the foundation conditions are similar to those upon which the designed is based. In site bearing capacity 2000 P.S.F.

If we can be of further service, please call.

Respectfully.

RA.# 13960
License Number

Signature, Seal and Date
Guillermo Ramon Gonzalez

All wind pressures include a load factor of 0.6

Elev ft	Kz	Kzt	qz psf	GCPi	Windward Press psf	Leeward Press psf	Side Press psf	Total Press psf	Minimum Pressure* psf
8.50	0.849	1.000	33.94	0.18	16.97	-14.64	-26.30	31.61	9.60

Wall Wind Pressures based on Negative Internal Pressure (-GCPi) - Parallel to Ridge

All wind pressures include a load factor of 0.6

Elev ft	Kz	Kzt	qz psf	GCPi	Windward Press psf	Leeward Press psf	Side Press psf	Total Press psf	Minimum Pressure* psf
8.50	0.849	1.000	33.94	-0.18	29.19	-2.42	-14.09	31.61	9.60

Notes Wall Pressures:

Kz = Velocity Press Exp Coeff
qz = 0.00256*Kz*Kzt*Kd*V^2
Side = qh * G * Cp_SW - qip * +GCPi
Leeward = qh * G * Cp_LW - qip * +GCPi
* Minimum Pressure: Para 27.1.5 no less than 9.60 psf (Incl LF) applied to Walls
+ Pressures Acting TOWARD Surface

Kzt = Topographical Factor
GCPi = Internal Press Coefficient
Windward = qz * G * Cp_WW - qip * +GCPi
Total = Windward Press - Leeward Press
- Pressures Acting AWAY from Surface

Roof Wind Pressures for Positive & Negative Internal Pressure (+/- GCPi) - Parallel to Ridge

All wind pressures include a load factor of 0.6

Roof Var	Start Dist ft	End Dist ft	Cp_min	Cp_max	GCPi	Pressure Pn_min* psf	Pressure Pp_min* psf	Pressure Pn_max psf	Pressure Pp_max psf
Hip_End (-X)	2.000	6.229	-0.180	-0.900	0.180	0.92	-11.30	-19.86	-32.07
Hip_End (-X)	6.229	12.458	-0.180	-0.900	0.180	0.92	-11.30	-19.86	-32.07
Hip_End (-X)	12.458	24.917	-0.180	-0.500	0.180	0.92	-11.30	-8.32	-20.53
Hip_End (-X)	24.917	35.500	-0.180	-0.300	0.180	0.92	-11.30	-2.55	-14.76
Hip_End (+X)	39.500	73.000	-0.180	-0.300	0.180	0.92	-11.30	-2.55	-14.76
OH_Bot	N/A	N/A	0.800	0.800	0.180	29.19	16.97	29.19	16.97
OH_Top (-X)	0.000	2.000	-0.180	-0.900	0.180	0.92	-11.30	-19.86	-32.07
OH_Top (-X)	0.000	2.000	-0.180	-0.900	0.180	0.92	-11.30	-19.86	-32.07
OH_Top (-X)	0.000	2.000	-0.180	-0.900	0.180	0.92	-11.30	-19.86	-32.07
OH_Top (-X)	0.000	2.000	-0.180	-0.900	0.180	0.92	-11.30	-19.86	-32.07
OH_Top (+Y)	0.000	2.000	-0.180	-0.900	0.180	0.92	-11.30	-19.86	-32.07
OH_Top (-Y)	0.000	2.000	-0.180	-0.900	0.180	0.92	-11.30	-19.86	-32.07
OH_Top (+Y)	2.000	6.229	-0.180	-0.900	0.180	0.92	-11.30	-19.86	-32.07
OH_Top (-Y)	2.000	6.229	-0.180	-0.900	0.180	0.92	-11.30	-19.86	-32.07
OH_Top (+Y)	6.229	12.458	-0.180	-0.900	0.180	0.92	-11.30	-19.86	-32.07
OH_Top (-Y)	6.229	12.458	-0.180	-0.900	0.180	0.92	-11.30	-19.86	-32.07
OH_Top (+Y)	12.458	24.917	-0.180	-0.500	0.180	0.92	-11.30	-8.32	-20.53
OH_Top (-Y)	12.458	24.917	-0.180	-0.500	0.180	0.92	-11.30	-8.32	-20.53
OH_Top (+Y)	24.917	37.500	-0.180	-0.300	0.180	0.92	-11.30	-2.55	-14.76
OH_Top (-Y)	24.917	37.500	-0.180	-0.300	0.180	0.92	-11.30	-2.55	-14.76
OH_Top (+Y)	37.500	73.000	-0.180	-0.300	0.180	0.92	-11.30	-2.55	-14.76
OH_Top (-Y)	37.500	73.000	-0.180	-0.300	0.180	0.92	-11.30	-2.55	-14.76
OH_Top (+X)	73.000	75.000	-0.180	-0.300	0.180	0.92	-11.30	-2.55	-14.76
OH_Top (+X)	73.000	75.000	-0.180	-0.300	0.180	0.92	-11.30	-2.55	-14.76
OH_Top (+X)	73.000	75.000	-0.180	-0.300	0.180	0.92	-11.30	-2.55	-14.76
OH_Top (+X)	73.000	75.000	-0.180	-0.300	0.180	0.92	-11.30	-2.55	-14.76
OH_Top (+Y)	73.000	75.000	-0.180	-0.300	0.180	0.92	-11.30	-2.55	-14.76
OH_Top (-Y)	73.000	75.000	-0.180	-0.300	0.180	0.92	-11.30	-2.55	-14.76
Roof (+Y)	2.000	6.229	-0.180	-0.900	0.180	0.92	-11.30	-19.86	-32.07
Roof (-Y)	2.000	6.229	-0.180	-0.900	0.180	0.92	-11.30	-19.86	-32.07
Roof (+Y)	6.229	12.458	-0.180	-0.900	0.180	0.92	-11.30	-19.86	-32.07
Roof (-Y)	6.229	12.458	-0.180	-0.900	0.180	0.92	-11.30	-19.86	-32.07
Roof (+Y)	12.458	24.917	-0.180	-0.500	0.180	0.92	-11.30	-8.32	-20.53
Roof (-Y)	12.458	24.917	-0.180	-0.500	0.180	0.92	-11.30	-8.32	-20.53
Roof (+Y)	24.917	73.000	-0.180	-0.300	0.180	0.92	-11.30	-2.55	-14.76
Roof (-Y)	24.917	73.000	-0.180	-0.300	0.180	0.92	-11.30	-2.55	-14.76

Notes Roof Pressures:

```
Start Dist = Start Dist from Windward Edge  End Dist = End Dist from Windward Edge
Cp_Max     = Largest Coefficient Magnitude  Cp_Min   = Smallest Coefficient Magnitude
Pp_max     = qh*G*Cp_max - qip*(+GCPi)      Pn_max   = qh*G*Cp_max - qin*(-GCpi)
Pp_min*    = qh*G*Cp_min - qip*(+GCPi)      Pn_min*  = qh*G*Cp_min - qin*(-GCPi)
OH = Overhang   X = Dir along Ridge   Y = Dir Perpendcular to Ridge  Z = Vertical
* The smaller uplift pressures due to Cp_Min can become critical when wind is combined
  with roof live load or snow load;  load combinations are given in ASCE 7
+ Pressures Acting TOWARD Surface          - Pressures Acting AWAY from Surface
```

Components and Cladding (C&C) Calculations per Ch 30 Part 1:

h/W	= Ratio of mean roof height to building width	= 0.366
h/L	= Ratio of mean roof height to building length	= 0.175
h	= Mean Roof Height above grade	= 12.458 ft
Kh	= Z < 15 ft [4.572 m]--> (2.01 * (15/zg)^(2/Alpha) {Table 26.10-1}	= 0.849
Kzt	= Topographic Factor is 1 since no Topographic feature specified	= 1.000
Kd	= Wind Directionality Factor per Table 26.6-1	= 0.85
GCPi	= Ref Table 26.13-1 for Enclosed Building	= +/-0.18
LF	= Load Factor based upon ASD Design	= 0.60
qh	= (0.00256 * Kh * Kzt * Kd * Ke * V^2) * LF	= 33.94 psf
LHD	= Least Horizontal Dimension: Min(B, L)	= 34.000 ft
a1	= Min(0.1 * LHD, 0.4 * h)	= 3.400 ft
a	= Max(a1, 0.04 * LHD, 3 ft [0.9 m])	= 3.400 ft
h/B	= Ratio of mean roof height to least hor dim: h / B	= 0.366

Wind Pressures for C&C Ch 30 Pt 1
All wind pressures include a load factor of 0.6

Description	Zone	Width ft	Span ft	Area sq ft	1/3 Rule	Ref Fig	GCp Max	GCp Min	p Max psf	p Min psf
roof	1	2.000	36.000	432.00	Yes	30.3-2G	0.300	-0.800	16.29	-33.26
roof	2e	2.000	36.000	432.00	Yes	30.3-2G	0.300	-1.000	16.29	-40.05
roof	2r	2.000	36.000	432.00	Yes	30.3-2G	0.300	-1.000	16.29	-40.05
wlf	4	1.000	8.500	24.08	Yes	30.3-1	0.933	-1.033	37.76	-41.16
wlf	5	1.000	8.500	24.08	Yes	30.3-1	0.933	-1.265	37.76	-49.05

```
Area     = Span Length x Effective Width
1/3 Rule = Effective width need not be less than 1/3 of the span length
GCp      = External Pressure Coefficients taken from Figures 30.3-1 through 30.3-7
p        = Wind Pressure:  qh*(GCp - GCpi)  [Eqn 30.3-1]*
* Per Para 30.2.2 the Minimum Pressure for C&C is 9.60 psf [0.460 kPa] {Includes LF}
```

Components and Cladding (C&C) Overhang Calculations per Section 30.9:

h	= Mean Roof Height above grade	= 12.458 ft
Kh	= Z < 15 ft [4.572 m]--> (2.01 * (15/zg)^(2/Alpha) {Table 26.10-1}	= 0.849
Kzt	= Topographic Factor is 1 since no Topographic feature specified	= 1.000
Kd	= Wind Directionality Factor per Table 26.6-1	= 0.85
GCPi	= Ref Table 26.13-1 for Enclosed Building	= +/-0.18
LF	= Load Factor based upon ASD Design	= 0.60
qh	= (0.00256 * Kh * Kzt * Kd * Ke * V^2) * LF	= 33.94 psf

Wind Pressures for C&C per Section 30.9 & Figure 30.3-2
All wind pressures include a load factor of 0.6

Description	Zone	Width ft	Span Length ft	Area sq ft	1/3 Rule	Ref Fig	GCpi +/-	GCp Max	GCp Min	p Max psf	p Min psf
roof	2e_OHS	2.000	2.000	4.00	No	30.3-2G	0.18	0.000	-2.500	9.60	-90.96

```
#_OHS    = Zone # on Overhang w/ Sofit w/ Buildings Internal Pressure (GCPi = +/-0.18)
Area     = Span Length x Effective Width
1/3 Rule = Effective width need not be less than 1/3 of the span length
p        = Wind Pressure:  qh*(GCp - GCpi)*LF  [Eqn 30.3-1]*
* Per Para 30.2.2 the Minimum Pressure for C&C is 9.60 psf [0.460 kPa] {Includes LF}
Values of GCp for overhangs include contributions from both upper and lower surfaces.
```

MecaWind v2403

Software Developer: Meca Enterprises Inc., www.meca.biz, Copyright © 2020

Calculations Prepared by:
True
Address
City, State,
Date: Mar 13, 2022
Designer: 0

Calculations Prepared For:
Client: 0
Project #: 0
Location: 0

File Location : H:\0-ALFONSO\AMBER PRIVAL\OPEN.wnd

Basic Wind Parameters

Wind Load Standard	= ASCE 7-16	Exposure Category	= C
Wind Design Speed	= 175.0 mph	Risk Category	= II
Structure Type	= Building	Building Type	= Partially Enclosed

General Wind Settings

Incl_LF	= Include ASD Load Factor of 0.6 in Pressures	= True
DynType	= Dynamic Type of Structure	= Rigid
Zg	= Altitude (Ground Elevation) above Sea Level	= 0.000 ft
Bdist	= Base Elevation of Structure	= 0.000 ft
SDB	= Simple Diaphragm Building	= True
zi	= Level of highest opening in building or zero to use h	= 0.0 ft
MWFRSType	= MWFRS Method Selected	= Ch 27 Pt 1

Topographic Factor per Fig 26.8-1

Topo	= Topographic Feature	= None
Kzt	= Topographic Factor	= 1.000

Building Inputs

RoofType:	Building Roof Type	= Hipped	W :	Width Perp to Ridge	= 34.000 ft
L :	Length Along Ridge	= 71.000 ft	EHt :	Eave Height	= 8.500 ft
Hip :	Ridge Hipped Length	= 4.000 ft	RE :	Roof Entry Method	= Slope
Slope :	Slope of Roof	= 5.0 :12	Theta :	Roof Slope	= 22.62 Deg
Par :	Is there a Parapet	= False			
Aog :	Tot Area of Openings	= 0.00 sq ft	Vi :	Unpart Int Volume	= 0.00 ft^3

Exposure Constants per Table 26.11-1:

Alpha:	Table 26.11-1 Const	= 9.500	Zg:	Table 26.11-1 Const	= 900.000 ft
At:	Table 26.11-1 Const	= 0.105	Bt:	Table 26.11-1 Const	= 1.000
Am:	Table 26.11-1 Const	= 0.154	Bm:	Table 26.11-1 Const	= 0.650
C:	Table 26.11-1 Const	= 0.200	Eps:	Table 26.11-1 Const	= 0.200

Overhang Inputs:

Std	= Overhangs on all sides are the same	= True
OHType	= Type of Roof Wall Intersections	= Sofit
OH	= Overhang of Roof Beyond Wall	= 2.000 ft

Main Wind Force Resisting System (MWFRS) Calculations per Ch 27 Part 1:

h	= Mean Roof Height above grade	= 12.458 ft
Kh	= Z < 15 ft [4.572 m]--> (2.01 * (15/zg)^(2/Alpha) {Table 26.10-1}	= 0.849
Kzt	= Topographic Factor is 1 since no Topographic feature specified	= 1.000
Kd	= Wind Directionality Factor per Table 26.6-1	= 0.85
Zg	= Elevation above Sea Level	= 0.000 ft
Ke	= Ground Elevation Factor: Ke = e^-(0.0000362*Zg) {Table 26.9-1}	= 1.000
Ri	= Reduction Factor for Partially Enclosed Large Volume Buildings	= 1.000
GCPi	= Ref Table 26.13-1 for Partially Enclosed Building: 0.55*Ri	= +/-0.55
RA	= Roof Area	= 2701.43 sq ft
LF	= Load Factor based upon ASD Design	= 0.60
qh	= (0.00256 * Kh * Kzt * Kd * Ke * V^2) * LF	= 33.94 psf
qin	= For Negative Internal Pressure of Partially Encl Bldg use qh*LF	= 33.94 psf
qip	= For Positive Internal Pressure no zi entered so use qh*LF	= 33.94 psf

Gust Factor Calculation:

Gust Factor Category I Rigid Structures - Simplified Method		
G1	= For Rigid Structures (Nat. Freq.>1 Hz) use 0.85	= 0.85
Gust Factor Category II Rigid Structures - Complete Analysis		
Zm	= Max(0.6 * Ht, Zmin)	= 15.000 ft
Izm	= Cc * (33 / Zm) ^ 0.167	= 0.228
Lzm	= L * (Zm / 33) ^ Eps	= 427.057
Q	= (1 / (1 + 0.63 * ((B + Ht) / Lzm)^0.63))^0.5	= 0.930
G2	= 0.925*((1+0.7*Izm*3.4*Q)/(1+0.7*3.4*Izm))	= 0.888
Gust Factor Used in Analysis		
G	= Lessor Of G1 Or G2	= 0.850

MWFRS Wind Normal to Ridge (Ref Fig 27.3-1)

h	= Mean Roof Height Of Building	= 12.458 ft
RHt	= Ridge Height Of Roof	= 16.417 ft
B	= Horizontal Dimension Of Building Normal To Wind Direction	= 71.000 ft
L	= Horizontal Dimension Of building Parallel To Wind Direction	= 34.000 ft
L/B	= Ratio Of L/B used For Cp determination	= 0.479
h/L	= Ratio Of h/L used For Cp determination	= 0.366
Slope	= Slope of Roof	= 22.62 Deg
OH_Top_+Y	= Overhang Top +Y (Leeward)	= -0.6, -0.6
OH_Top_-Y	= Overhang Top Windward Edge	= 0.18, -0.29
OH_X	= Overhang Top +/-X Coeff (0 to h/2) (0.000 ft to 2.000 ft)	= -0.18, -0.9
OH_X	= Overhang Top +/-X Coeff (0 to h/2) (2.000 ft to 6.229 ft)	= -0.18, -0.9
OH_X	= Overhang Top +/-X Coeff (h/2 to h) (6.229 ft to 12.458 ft)	= -0.18, -0.9
OH_X	= Overhang Top +/-X Coeff (h to 2h) (12.458 ft to 19.000 ft)	= -0.18, -0.5
OH_X	= Overhang Top +/-X Coeff (h to 2h) (19.000 ft to 24.917 ft)	= -0.18, -0.5
OH_X	= Overhang Top +/-X Coeff (>2h) (>24.917 ft)	= -0.18, -0.3
OH_X	= Overhang Top +/-X Coeff (>2h) (>36.000 ft)	= -0.18, -0.3
Roof_LW	= Roof (Leeward)	= -0.6, -0.6
Roof_WW	= Roof (Windward)	= 0.18, -0.29
Roof_X	= Roof +/-X Coeff (0 to h/2) (2.000 ft to 6.229 ft)	= -0.18, -0.9
Roof_X	= Roof +/-X Coeff (h/2 to h) (6.229 ft to 12.458 ft)	= -0.18, -0.9
Roof_X	= Roof +/-X Coeff (h to 2h) (12.458 ft to 24.917 ft)	= -0.18, -0.5
Roof_X	= Roof +/-X Coeff (>2h) (>24.917 ft)	= -0.18, -0.3
Sofit_-Y	= Overhang Sofit -Y	= 0.8, 0.8
Cp_WW	= Windward Wall Coefficient (All L/B Values)	= 0.80
Cp_LW	= Leward Wall Coefficient using L/B	= -0.50
Cp_SW	= Side Wall Coefficient (All L/B values)	= -0.70
GCpn_WW	= Parapet Combined Net Pressure Coefficient (Windward Parapet)	= 1.50
GCpn_LW	= Parapet Combined Net Pressure Coefficient (Leeward Parapet)	= -1.00

Wall Wind Pressures based On Positive Internal Pressure (+GCPi) - Normal to Ridge
All wind pressures include a load factor of 0.6

Elev ft	Kz	Kzt	qz psf	GCPi	Windward Press psf	Leeward Press psf	Side Press psf	Total Press psf	Minimum Pressure* psf
8.50	0.849	1.000	33.94	0.55	4.41	-33.09	-38.86	37.51	9.60

Wall Wind Pressures based on Negative Internal Pressure (-GCPi) - Normal to Ridge
All wind pressures include a load factor of 0.6

Elev ft	Kz	Kzt	qz psf	GCPi	Windward Press psf	Leeward Press psf	Side Press psf	Total Press psf	Minimum Pressure* psf
8.50	0.849	1.000	33.94	-0.55	41.75	4.24	-1.53	37.51	9.60

Notes Wall Pressures:
Kz = Velocity Press Exp Coeff
qz = 0.00256*Kz*Kzt*Kd*V^2
Side = qh * G * Cp_SW - qip * +GCPi
Leeward = qh * G * Cp_LW - qip * +GCPi
Kzt = Topographical Factor
GCPi = Internal Press Coefficient
Windward = qz * G * Cp_WW - qip * +GCPi
Total = Windward Press - Leeward Press
* Minimum Pressure: Para 27.1.5 no less than 9.60 psf (Incl LF) applied to Walls
+ Pressures Acting TOWARD Surface
- Pressures Acting AWAY from Surface

Roof Wind Pressures for Positive & Negative Internal Pressure (+/- GCPi) - Normal to Ridge
All wind pressures include a load factor of 0.6

Roof Var	Start Dist ft	End Dist ft	Cp_min	Cp_max	GCPi	Pressure Pn_min* psf	Pressure Pp_min* psf	Pressure Pn_max psf	Pressure Pp_max psf
OH_Top_+Y	N/A	N/A	-0.600	-0.600	0.550	1.36	-35.98	1.36	-35.98
OH_Top_+Y	N/A	N/A	-0.600	-0.600	0.550	1.36	-35.98	1.36	-35.98
OH_Top_-Y	N/A	N/A	0.180	-0.290	0.550	23.86	-13.47	10.30	-27.03
OH_Top_-Y	N/A	N/A	0.180	-0.290	0.550	23.86	-13.47	10.30	-27.03
OH_X (+X)	0.000	2.000	-0.180	-0.900	0.550	13.47	-23.86	-7.30	-44.63
OH_X (-X)	0.000	2.000	-0.180	-0.900	0.550	13.47	-23.86	-7.30	-44.63
OH_X (+X)	2.000	6.229	-0.180	-0.900	0.550	13.47	-23.86	-7.30	-44.63
OH_X (-X)	2.000	6.229	-0.180	-0.900	0.550	13.47	-23.86	-7.30	-44.63
OH_X (+X)	6.229	12.458	-0.180	-0.900	0.550	13.47	-23.86	-7.30	-44.63
OH_X (-X)	6.229	12.458	-0.180	-0.900	0.550	13.47	-23.86	-7.30	-44.63
OH_X (+X)	12.458	19.000	-0.180	-0.500	0.550	13.47	-23.86	4.24	-33.09
OH_X (-X)	12.458	19.000	-0.180	-0.500	0.550	13.47	-23.86	4.24	-33.09
OH_X (+X)	19.000	24.917	-0.180	-0.500	0.550	13.47	-23.86	4.24	-33.09
OH_X (-X)	19.000	24.917	-0.180	-0.500	0.550	13.47	-23.86	4.24	-33.09

OH_X (+X)	24.917	36.000	-0.180	-0.300	0.550	13.47	-23.86	10.01	-27.32
OH_X (-X)	24.917	36.000	-0.180	-0.300	0.550	13.47	-23.86	10.01	-27.32
OH_X (+X)	36.000	38.000	-0.180	-0.300	0.550	13.47	-23.86	10.01	-27.32
OH_X (-X)	36.000	38.000	-0.180	-0.300	0.550	13.47	-23.86	10.01	-27.32
Roof_LW	N/A	N/A	-0.600	-0.600	0.550	1.36	-35.98	1.36	-35.98
Roof_WW	N/A	N/A	0.180	-0.290	0.550	23.86	-13.47	10.30	-27.03
Roof_X (+X)	2.000	6.229	-0.180	-0.900	0.550	13.47	-23.86	-7.30	-44.63
Roof_X (-X)	2.000	6.229	-0.180	-0.900	0.550	13.47	-23.86	-7.30	-44.63
Roof_X (+X)	6.229	12.458	-0.180	-0.900	0.550	13.47	-23.86	-7.30	-44.63
Roof_X (-X)	6.229	12.458	-0.180	-0.900	0.550	13.47	-23.86	-7.30	-44.63
Roof_X (+X)	12.458	24.917	-0.180	-0.500	0.550	13.47	-23.86	4.24	-33.09
Roof_X (-X)	12.458	24.917	-0.180	-0.500	0.550	13.47	-23.86	4.24	-33.09
Roof_X (+X)	24.917	36.000	-0.180	-0.300	0.550	13.47	-23.86	10.01	-27.32
Roof_X (-X)	24.917	36.000	-0.180	-0.300	0.550	13.47	-23.86	10.01	-27.32
Sofit_-Y	N/A	N/A	0.800	0.800	0.550	41.75	4.41	41.75	4.41

Notes Roof Pressures:
Start Dist = Start Dist from Windward Edge End Dist = End Dist from Windward Edge
Cp_Max = Largest Coefficient Magnitude Cp_Min = Smallest Coefficient Magnitude
Pp_max = qh*G*Cp_max - qip*(+GCPi) Pn_max = qh*G*Cp_max - qin*(-GCPi)
Pp_min* = qh*G*Cp_min - qip*(+GCPi) Pn_min* = qh*G*Cp_min - qin*(-GCPi)
OH = Overhang X = Dir along Ridge Y = Dir Perpendcular to Ridge Z = Vertical
* The smaller uplift pressures due to Cp_Min can become critical when wind is combined with roof live load or snow load; load combinations are given in ASCE 7
+ Pressures Acting TOWARD Surface - Pressures Acting AWAY from Surface

MWFRS Wind Parallel to Ridge (Ref Fig 27.3-1)

h	= Mean Roof Height Of Building	= 12.458 ft
RHt	= Ridge Height Of Roof	= 16.417 ft
B	= Horizontal Dimension Of Building Normal To Wind Direction	= 34.000 ft
L	= Horizontal Dimension Of building Parallel To Wind Direction	= 71.000 ft
L/B	= Ratio Of L/B used For Cp determination	= 2.088
h/L	= Ratio Of h/L used For Cp determination	= 0.175
Slope	= Slope of Roof	= 22.62 Deg
Hip_End	= Hipped End Coeff (0 to h/2) (2.000 ft to 6.229 ft)	= -0.18, -0.9
Hip_End	= Hipped End Coeff (h/2 to h) (6.229 ft to 12.458 ft)	= -0.18, -0.9
Hip_End	= Hipped End Coeff (h to 2h) (12.458 ft to 24.917 ft)	= -0.18, -0.5
Hip_End	= Hipped End Coeff (>2h) (>24.917 ft)	= -0.18, -0.3
Hip_End	= Hipped End Coeff (>2h) (>39.500 ft)	= -0.18, -0.3
OH_Bot	= Sofit (Windward Face Only)	= 0.8, 0.8
OH_Top	= Overhang Top Coeff (0 to h/2) (0.000 ft to 2.000 ft)	= -0.18, -0.9
OH_Top	= Overhang Top Coeff (0 to h/2) (2.000 ft to 6.229 ft)	= -0.18, -0.9
OH_Top	= Overhang Top Coeff (h/2 to h) (6.229 ft to 12.458 ft)	= -0.18, -0.9
OH_Top	= Overhang Top Coeff (h to 2h) (12.458 ft to 24.917 ft)	= -0.18, -0.5
OH_Top	= Overhang Top Coeff (>2h) (>24.917 ft)	= -0.18, -0.3
OH_Top	= Overhang Top Coeff (>2h) (>37.500 ft)	= -0.18, -0.3
OH_Top	= Overhang Top Coeff (>2h) (>73.000 ft)	= -0.18, -0.3
Roof	= Roof Coeff (0 to h/2) (2.000 ft to 6.229 ft)	= -0.18, -0.9
Roof	= Roof Coeff (h/2 to h) (6.229 ft to 12.458 ft)	= -0.18, -0.9
Roof	= Roof Coeff (h to 2h) (12.458 ft to 24.917 ft)	= -0.18, -0.5
Roof	= Roof Coeff (>2h) (>24.917 ft)	= -0.18, -0.3
Cp_WW	= Windward Wall Coefficient (All L/B Values)	= 0.80
Cp_LW	= Leward Wall Coefficient using L/B	= -0.30
Cp_SW	= Side Wall Coefficient (All L/B values)	= -0.70
GCpn_WW	= Parapet Combined Net Pressure Coefficient (Windward Parapet)	= 1.50
GCpn_LW	= Parapet Combined Net Pressure Coefficient (Leeward Parapet)	= -1.00

Wall Wind Pressures based On Positive Internal Pressure (+GCPi) - Parallel to Ridge
All wind pressures include a load factor of 0.6

Elev ft	Kz	Kzt	qz psf	GCPi	Windward Press psf	Leeward Press psf	Side Press psf	Total Press psf	Minimum Pressure* psf
8.50	0.849	1.000	33.94	0.55	4.41	-27.20	-38.86	31.61	9.60

Wall Wind Pressures based on Negative Internal Pressure (-GCPi) - Parallel to Ridge
All wind pressures include a load factor of 0.6

Elev ft	Kz	Kzt	qz psf	GCPi	Windward Press psf	Leeward Press psf	Side Press psf	Total Press psf	Minimum Pressure* psf
8.50	0.849	1.000	33.94	-0.55	41.75	10.14	-1.53	31.61	9.60

Notes Wall Pressures:
Kz = Velocity Press Exp Coeff Kzt = Topographical Factor

```
qz       = 0.00256*Kz*Kzt*Kd*V^2              GCPi     = Internal Press Coefficient
Side     = qh * G * Cp_SW - qip * +GCPi       Windward = qz * G * Cp_WW - qip * +GCPi
Leeward  = qh * G * Cp_LW - qip * +GCPi       Total    = Windward Press - Leeward Press
* Minimum Pressure: Para 27.1.5 no less than 9.60 psf (Incl LF) applied to Walls
+ Pressures Acting TOWARD Surface             - Pressures Acting AWAY from Surface
```

Roof Wind Pressures for Positive & Negative Internal Pressure (+/- GCPi) - Parallel to Ridge
All wind pressures include a load factor of 0.6

Roof Var	Start Dist ft	End Dist ft	Cp_min	Cp_max	GCPi	Pressure Pn_min* psf	Pressure Pp_min* psf	Pressure Pn_max psf	Pressure Pp_max psf
Hip_End (-X)	2.000	6.229	-0.180	-0.900	0.550	13.47	-23.86	-7.30	-44.63
Hip_End (-X)	6.229	12.458	-0.180	-0.900	0.550	13.47	-23.86	-7.30	-44.63
Hip_End (-X)	12.458	24.917	-0.180	-0.500	0.550	13.47	-23.86	4.24	-33.09
Hip_End (-X)	24.917	35.500	-0.180	-0.300	0.550	13.47	-23.86	10.01	-27.32
Hip_End (+X)	39.500	73.000	-0.180	-0.300	0.550	13.47	-23.86	10.01	-27.32
OH_Bot	N/A	N/A	0.800	0.800	0.550	41.75	4.41	41.75	4.41
OH_Top (-X)	0.000	2.000	-0.180	-0.900	0.550	13.47	-23.86	-7.30	-44.63
OH_Top (-X)	0.000	2.000	-0.180	-0.900	0.550	13.47	-23.86	-7.30	-44.63
OH_Top (-X)	0.000	2.000	-0.180	-0.900	0.550	13.47	-23.86	-7.30	-44.63
OH_Top (-X)	0.000	2.000	-0.180	-0.900	0.550	13.47	-23.86	-7.30	-44.63
OH_Top (+Y)	0.000	2.000	-0.180	-0.900	0.550	13.47	-23.86	-7.30	-44.63
OH_Top (-Y)	0.000	2.000	-0.180	-0.900	0.550	13.47	-23.86	-7.30	-44.63
OH_Top (+Y)	2.000	6.229	-0.180	-0.900	0.550	13.47	-23.86	-7.30	-44.63
OH_Top (-Y)	2.000	6.229	-0.180	-0.900	0.550	13.47	-23.86	-7.30	-44.63
OH_Top (+Y)	6.229	12.458	-0.180	-0.900	0.550	13.47	-23.86	-7.30	-44.63
OH_Top (-Y)	6.229	12.458	-0.180	-0.900	0.550	13.47	-23.86	-7.30	-44.63
OH_Top (+Y)	12.458	24.917	-0.180	-0.500	0.550	13.47	-23.86	4.24	-33.09
OH_Top (-Y)	12.458	24.917	-0.180	-0.500	0.550	13.47	-23.86	4.24	-33.09
OH_Top (+Y)	24.917	37.500	-0.180	-0.300	0.550	13.47	-23.86	10.01	-27.32
OH_Top (-Y)	24.917	37.500	-0.180	-0.300	0.550	13.47	-23.86	10.01	-27.32
OH_Top (+Y)	37.500	73.000	-0.180	-0.300	0.550	13.47	-23.86	10.01	-27.32
OH_Top (-Y)	37.500	73.000	-0.180	-0.300	0.550	13.47	-23.86	10.01	-27.32
OH_Top (+X)	73.000	75.000	-0.180	-0.300	0.550	13.47	-23.86	10.01	-27.32
OH_Top (+X)	73.000	75.000	-0.180	-0.300	0.550	13.47	-23.86	10.01	-27.32
OH_Top (+X)	73.000	75.000	-0.180	-0.300	0.550	13.47	-23.86	10.01	-27.32
OH_Top (+X)	73.000	75.000	-0.180	-0.300	0.550	13.47	-23.86	10.01	-27.32
OH_Top (+Y)	73.000	75.000	-0.180	-0.300	0.550	13.47	-23.86	10.01	-27.32
OH_Top (-Y)	73.000	75.000	-0.180	-0.300	0.550	13.47	-23.86	10.01	-27.32
Roof (+Y)	2.000	6.229	-0.180	-0.900	0.550	13.47	-23.86	-7.30	-44.63
Roof (-Y)	2.000	6.229	-0.180	-0.900	0.550	13.47	-23.86	-7.30	-44.63
Roof (+Y)	6.229	12.458	-0.180	-0.900	0.550	13.47	-23.86	-7.30	-44.63
Roof (-Y)	6.229	12.458	-0.180	-0.900	0.550	13.47	-23.86	-7.30	-44.63
Roof (+Y)	12.458	24.917	-0.180	-0.500	0.550	13.47	-23.86	4.24	-33.09
Roof (-Y)	12.458	24.917	-0.180	-0.500	0.550	13.47	-23.86	4.24	-33.09
Roof (+Y)	24.917	73.000	-0.180	-0.300	0.550	13.47	-23.86	10.01	-27.32
Roof (-Y)	24.917	73.000	-0.180	-0.300	0.550	13.47	-23.86	10.01	-27.32

```
Notes Roof Pressures:
Start Dist = Start Dist from Windward Edge  End Dist = End Dist from Windward Edge
Cp_Max     = Largest Coefficient Magnitude  Cp_Min   = Smallest Coefficient Magnitude
Pp_max     = qh*G*Cp_max - qip*(+GCPi)      Pn_max   = qh*G*Cp_max - qin*(-GCpi)
Pp_min*    = qh*G*Cp_min - qip*(+GCPi)      Pn_min*  = qh*G*Cp_min - qin*(-GCPi)
OH = Overhang   X = Dir along Ridge   Y = Dir Perpendcular to Ridge  Z = Vertical
* The smaller uplift pressures due to Cp_Min can become critical when wind is combined
  with roof live load or snow load;  load combinations are given in ASCE 7
+ Pressures Acting TOWARD Surface          - Pressures Acting AWAY from Surface
```

Components and Cladding (C&C) Calculations per Ch 30 Part 1:

```
h/W    = Ratio of mean roof height to building width                          = 0.366
h/L    = Ratio of mean roof height to building length                         = 0.175
h      = Mean Roof Height above grade                                         = 12.458 ft
Kh     = Z < 15 ft [4.572 m]--> (2.01 * (15/zg)^(2/Alpha) {Table 26.10-1}     = 0.849
Kzt    = Topographic Factor is 1 since no Topographic feature specified       = 1.000
Kd     = Wind Directionality Factor per Table 26.6-1                          = 0.85
Ri     = Reduction Factor for Partially Enclosed Large Volume Buildings       = 1.000
GCPi   = Ref Table 26.13-1 for Partially Enclosed Building: 0.55*Ri           = +/-0.55
LF     = Load Factor based upon ASD Design                                    = 0.60
qh     = (0.00256 * Kh * Kzt * Kd * Ke * V^2) * LF                            = 33.94 psf
LHD    = Least Horizontal Dimension:  Min(B, L)                               = 34.000 ft
al     = Min(0.1 * LHD,  0.4 * h)                                             = 3.400 ft
a      = Max(al, 0.04 * LHD, 3 ft [0.9 m])                                    = 3.400 ft
h/B    = Ratio of mean roof height to least hor dim: h / B                    = 0.366
```

Wind Pressures for C&C Ch 30 Pt 1

All wind pressures include a load factor of 0.6

Description	Zone	Width ft	Span ft	Area sq ft	1/3 Rule	Ref Fig	GCp Max	GCp Min	p Max psf	p Min psf
roof	1	2.000	36.000	432.00	Yes	30.3-2G	0.300	-0.800	28.85	-45.82
roof	2e	2.000	36.000	432.00	Yes	30.3-2G	0.300	-1.000	28.85	-52.61
roof	2r	2.000	36.000	432.00	Yes	30.3-2G	0.300	-1.000	28.85	-52.61
wlf	4	1.000	8.500	24.08	Yes	30.3-1	0.933	-1.033	50.32	-53.72
wlf	5	1.000	8.500	24.08	Yes	30.3-1	0.933	-1.265	50.32	-61.61

Area = Span Length x Effective Width
1/3 Rule = Effective width need not be less than 1/3 of the span length
GCp = External Pressure Coefficients taken from Figures 30.3-1 through 30.3-7
p = Wind Pressure: qh*(GCp - GCpi) [Eqn 30.3-1]*
* Per Para 30.2.2 the Minimum Pressure for C&C is 9.60 psf [0.460 kPa] {Includes LF}

Components and Cladding (C&C) Overhang Calculations per Section 30.9:

h	= Mean Roof Height above grade	= 12.458 ft
Kh	= Z < 15 ft [4.572 m]--> (2.01 * (15/zg)^(2/Alpha) {Table 26.10-1}	= 0.849
Kzt	= Topographic Factor is 1 since no Topographic feature specified	= 1.000
Kd	= Wind Directionality Factor per Table 26.6-1	= 0.85
Ri	= Reduction Factor for Partially Enclosed Large Volume Buildings	= 1.000
GCPi	= Ref Table 26.13-1 for Partially Enclosed Building: 0.55*Ri	= +/-0.55
LF	= Load Factor based upon ASD Design	= 0.60
qh	= (0.00256 * Kh * Kzt * Kd * Ke * V^2) * LF	= 33.94 psf

Wind Pressures for C&C per Section 30.9 & Figure 30.3-2
All wind pressures include a load factor of 0.6

Description	Zone	Width ft	Span Length ft	Area sq ft	1/3 Rule	Ref Fig	GCpi +/-	GCp Max	GCp Min	p Max psf	p Min psf
roof	2e_OHS	2.000	2.000	4.00	No	30.3-2G	0.55	0.000	-2.500	9.60	-103.52

#_OHS = Zone # on Overhang w/ Sofit w/ Buildings Internal Pressure (GCPi = +/-0.55)
Area = Span Length x Effective Width
1/3 Rule = Effective width need not be less than 1/3 of the span length
p = Wind Pressure: qh*(GCp - GCpi)*LF [Eqn 30.3-1]*
* Per Para 30.2.2 the Minimum Pressure for C&C is 9.60 psf [0.460 kPa] {Includes LF}
Values of GCp for overhangs include contributions from both upper and lower surfaces.

GENERAL NOTES:

CONCRETE SHALL HAVE 3 000 PSI COMPRESSIVE STRENGTH AT 28 DAYS UNLESS OTHERWISE NOTED (U O N)
ALL REINFORCING STEEL SHALL BE DEFORMED BARS AND SHALL HAVE A MINIMUM YIELD STRENGTH OF 60 000 PSI GRADE 60 AND MEET ASTM A-615 SPECS
ALL STRUCTURAL STEEL SHALL HAVE A MINIMUM YIELD STRENGTH OF 36 000 PSI AND MEET ASTM A-36 SPECS
DROP TIE BEAM OVER DOORS EXTEND 8" PAST OPENING ON BOTH SIDES AND ADD 2 #5 BARS FOR EVERY ADDITIONAL 8" OF BEAM HEIGHT (2 ADDITIONAL BARS MIN)

FOUNDATIONS

SOIL STATEMENT:

THE SOIL AT THIS SITE HAS BEEN OBSERVED BY THE ARCHITECT OR ENGINEER TO BE COMPOSED OF SAND AND ROCKS AND CAN BE CONSIDERED TO HAVE AN ALLOWABLE MINIMUM DESIGN BEARING CAPACITY OF 2 000 P S F (SHOULD ANY OTHER CONDITIONS OR MATERIALS BE ENCOUNTERED IN THE PROCESS OF CONSTRUCTION THE ARCHITECT OR ENGINEER SHALL BE NOTIFIED BEFORE PROCEEDING WITH THE WORK)

ALL BUILDINGS SHALL HAVE PRE-CONSTRUCTION TREATMENT PROTECTION AGAINST SUBTERRANEAN TERMITES AS PER F B C 2020 7th EDITION A CERTIFICATE OF COMPLIANCE SHALL BE ISSUED TO THE BUILDING DEPARTMENT BY THE LICENSED PEST CONTROL COMPANY THAT CONTAINS THE FOLLOWING STATEMENTS " THE BUILDING HAS RECEIVED A COMPLETE TREATMENT FOR THE PREVENTION OF SUBTERRANEAN TERMITES TREATMENT IS IN ACCORDANCE WITH THE RULES AND LAWS ESTABLISHED BY THE FLORIDA DEPARTMENT OF AGRICULTURE AND CONSUMER SERVICES "

AT THE TIME OF CONSTRUCTION THE ARCHITECT OR ENGINEER SHALL SUBMIT TO THE BUILDING OFFICIAL A LETTER ATTESTING THAT THE SITE HAS BEEN OBSERVED AND THAT THE FOUNDATION CONDITIONS ARE SIMILAR TO THOSE UPON WHICH THE DESIGN IS BASED
SOIL AT THE BUILDING AREA SHALL BE VIBRE-ROLLED TO A MIN COMP ACTION OF 2 000 P S F AND MODIFIED PROCTOR DENSITY
CENTERLINE OF FOOTING IS CENTERLINE OF COLUMNS AND BEARING WALLS, UNLESS OTHER WISE NOTED (U O N)
ELEVATION OF TOP OF FOOTING SHALL BE 1'- 0" BELOW THE FINISHED GRADE, U O N
PROVIDE BEND DOWELS AT ALL COLUMNS AND VERTICAL REINFORCEMENT SAME SIZE AND QUANTITY AS REINFORCEMENT

REINFORCING

MINIMUM CLEAR COVER FOR REBARS TO BE AS FOLLOWS
COLUMNS = 1-1/2" TO TIE FOOTINGS = 3" BEAMS = 1-1/2" TO TIE
PEDESTAL = 2" TO TIE SLAB ON FILL = 2" FROM TOP SLABS = 3/4"
ALL REINFORCING SHALL BE HELD SECURELY IN POSITION WITH STANDARD ACCESSORIES
SPLICES IN CONTINUOS TOP REBARS SHALL BE MADE AT MID SPAN, SPLICES IN CONTINUOS BOTTOM REBARS SHALL BE OVER SUPPORT(S)
SPLICES IN REINFORCING, WHERE PERMITTED SHALL BE AS FOLLOWS
COLUMN VERT BARS = 30 BAR DIA TEMPERATURE REBARS = 12" MIN
FOOTING DOWELS = 30 BAR DIA + 8" WELDED WIRE MESH = 6"
TENSION SPLICE = CLASS "C" ALL OTHERS = 30 BAR DIA
PROVIDE 2 #5'S 60" LONG BEND BARS AT CORNERS OF BEAMS.

SLAB

4" FIBER STEALTH CONCRETE SLAB 3000 PSI

~~SLAB SHALL BE 2500 PSI CONCRETE (MIN) 4" THICK REINFORCED WITH 6"X 6"- 10/10 (GAUGE) WELDED WIRE MESH (W W M) ON WELL COMPACTED FILL~~
FILL MATERIAL SHALL BE CLEAN SAND AND ROCK COMPACTED TO 95% OF MAXIMUM DENSITY IN LIFTS NOT TO EXCEED 12" IN DEPTH
PLACE CONCRETE SLABS IN A CHECKERBOARD PATTERN, NO PANEL EXCEEDING 25 FEET OF LENGTH, OR 625 SF IN AREA, OR USE CONTROL JOINTS
ELEVATION TOP OF CONCRETE SLAB SHOWN THUSLY OR MATCH EXISTING ADJACENT FLOOR ELEVATION
WALLS, COLUMNS AND BEAMS, PENETRATING SLAB ON FILL, SHALL BE ISOLATED BY 1/2" PRE MOLDED JOINT FILLER, UNLESS OTHERWISE NOTED (U O N)
GLASS SHALL BE PLACED OVER 1 LAYER OF PLASTIC MEMBRANE, SUCH AS 6 MIL VISQUEEN, OR SIMILAR
SLABS ON FILL SHALL BE CURED CONTINUOUSLY FOR 5 DAYS

MASONRY

CONCRETE MASONRY UNITS (CMU), OR "BLOCKS", SHALL CONFORM TO ASTM C-90 SPECS
COMPRESSIVE STRENGTH OF MASONRY UNITS SHALL BE NOT LESS THAN F'M= 1500 PSI
ALL BLOCK WALLS SHALL BE LAID IN A FULL BEDDING OF MORTAR, WITH A COMPLETE COVERAGE OF THE BLOCK'S FACE SHELL (HORIZONTALLY) AND MORTAR GROOVES (VERTICALLY) AND REINFORCED WITH #9 TRUSS TYPE JOINT REINFORCEMENT @ EVERY OTHER COURSE (16"O C VERTICALLY)
MORTAR TO BOND BLOCK MASONRY SHALL BE TYPE "M", 2 500 PSI
THE FIRST BLOCK CELL ADJACENT TO ANY OPENING SHALL BE FILLED WITH CONCRETE
THE FIRST BLOCK CELL ADJACENT TO ANY OPENING FROM 3'TO 8'SHALL BE REINFORCED WITH 1- #5 VERTICAL AND BE FILLED WITH 2500 PSI CONCRETE

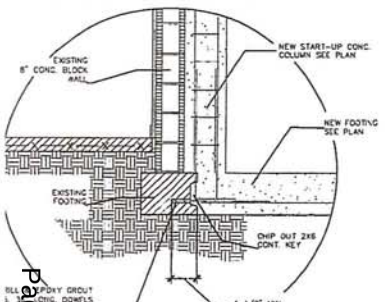

CONN. OF NEW FTG. TO EXIST'G
SCALE : 3/4" = 1'-0"

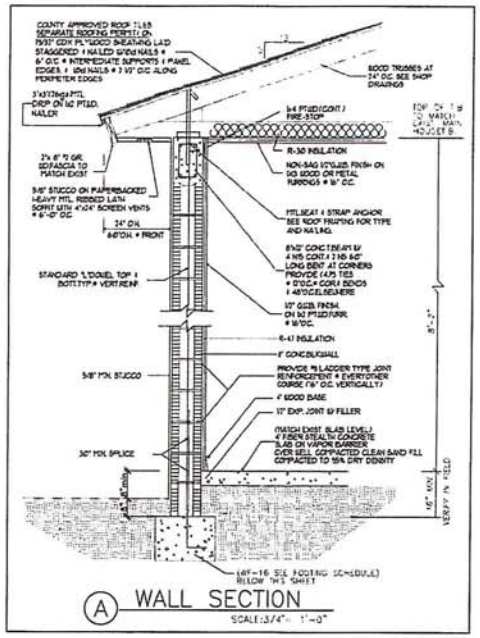

A WALL SECTION
SCALE: 3/4"= 1'-0"

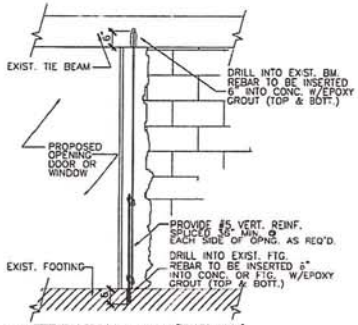

B TIE DOWN DETAIL (TYPICAL) AT EXISTING WALL
SCALE: 3/4" = 1'-0"

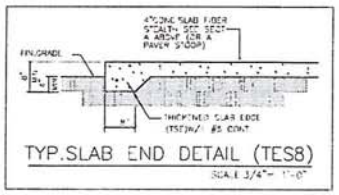

TYP.SLAB END DETAIL (TES8)
SCALE 3/4"= 1'-0"

FOOTING/COLUMN SCHEDULE

MARK	WIDTH	DEPTH	REINF.	A	B	C	D
MF-16	16"	16"	1#9 @ 8"	2 #5 CONT.			
C1	8"x 16"	CONCRETE COLUMN	4#5 @ 8"				
C2	8"x 8"	CONCRETE COLUMN	4#5 @ 8"				
C3	8"x 12"	CONCRETE COLUMN	4#5 @ 8"				
MF-4	48"x48"	12"	16"	5 #5	#5	#5	#5
MF-5	60"x60"	20"	22"	7 #5	#5	#5	#5

STEEL INFORMATION N.T.S.

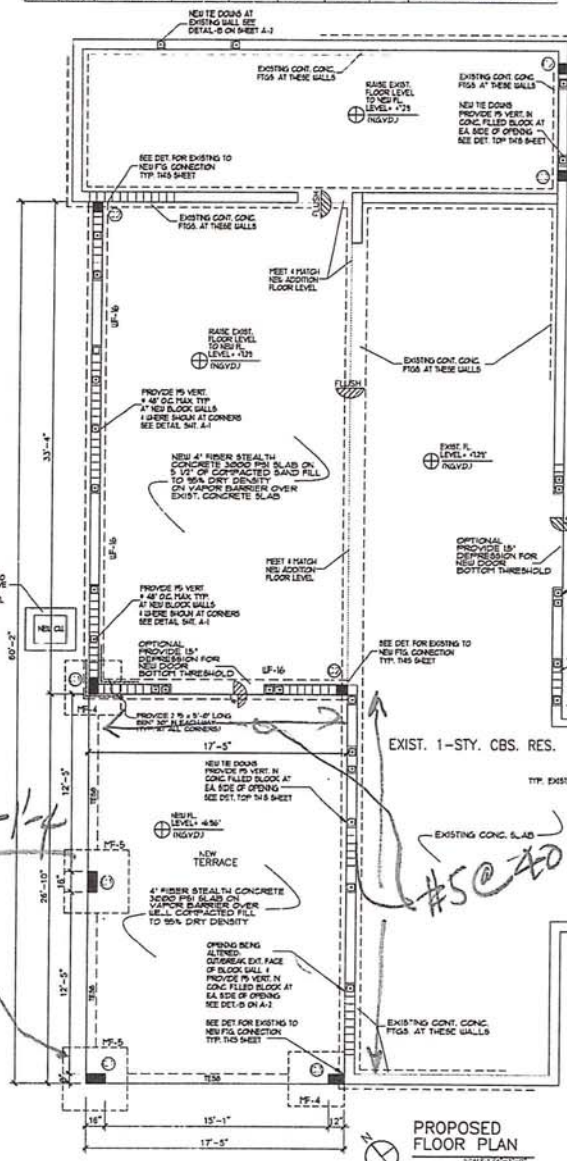

PROPOSED FLOOR PLAN
SCALE: 1/4"=1'-0"

NO.	DATE
1	-
2	-
3	-
4	-
5	-

PROJECT NAME: ADDITION TO RESIDENCE FOR:
OWNER/PH: AMBAR PREVIL 786-587-7391
ADDRESS: 200 N. ESPLANADE DRIVE MIAMI SPRINGS, FLORIDA 33166
PROJECT ADD: SAME

Guillermo Ramon Gonzalez
9000 SW. 184th Avenue Miami Florida 33196 Ph:305-484-8171 Fx:305-234-2754
Registered Architect #13980 (resident)

Guillermo Ramon Gonzalez
R.A. 13980
STATE OF FLORIDA

103321

A-2

JOSE GUZMAN P.E.
16581 SW 64 terrace
MIAMI, FLORIDA
786-338-1082
JGUZMANALBA@AOL.COM

JOB _____

SHEET NO. _____ OF _____

CALCULATED BY _____ DATE _____

CHECKED BY _____ DATE _____

SCALE _____

Footing

wind load = 50 psf

Area = $\left(\frac{17.42}{2}+2\right)(12.42+1.33) = 147.3$ SF

$147.3 \times 50 = 7363$ #

CONC BEAM $\frac{8\times12}{144} \times 150 \times (12.42+1.33) = 1373$ #

COL. $\frac{8\times16}{144} \cdot 8.83 \times 150 = 1177$ #

ROOF $10 \text{ psf} \times 147.3 \text{ SF} = 1473$ #

Footing $5\times5\times1.5\times150 = 5625$ #

EARTH/SLAB $5\times5\times0.67\times110 = 1843$

10431

$10431 \times 0.6 = 6258 < 7363$

U.G.

Footing – 1'-4"

$5\times5\times1.33\times110 = 3658$

5625
1373
1177
1473
3658

$13305.5 \times 0.6 = 7983$ OK

MecaWind v240

Software Developer: Meca Enterprises Inc., www.meca.biz, Copyright © 2020

Calculations Prepared by:
Client: 0
Date: May 04, 2022
Designer: 0

Calculations Prepared For:
Project #: 0
Location: 0

File Location : I:\0-ALFONSO\AMBER PRIVAL\CLOSED.wnd

Basic Wind Parameters

Wind Load Standard	= ASCE 7-16	Exposure Category	= C
Wind Design Speed	= 175.0 mph	Risk Category	= II
Structure Type	= Building	Building Type	= Enclosed

General Wind Settings

Incl_LF	= Include ASD Load Factor of 0.6 in Pressures	= True
DynType	= Dynamic Type of Structure	= Rigid
Zg	= Altitude (Ground Elevation) above Sea Level	= 0.000 ft
Bdist	= Base Elevation of Structure	= 0.000 ft
SDB	= Simple Diaphragm Building	= True
MWFRSType	= MWFRS Method Selected	= Ch 27 Pt 1

Topographic Factor per Fig 26.8-1

Topo	= Topographic Feature	= None
Kzt	= Topographic Factor	= 1.000

Building Inputs

RoofType:	Building Roof Type	= Hipped	W :	Width Perp to Ridge	= 34.000 ft
L :	Length Along Ridge	= 71.000 ft	EHt :	Eave Height	= 8.500 ft
Hip :	Ridge Hipped Length	= 4.000 ft	RE :	Roof Entry Method	= Slope
Slope :	Slope of Roof	= 5.0 :12	Theta :	Roof Slope	= 22.62 Deg
Par :	Is there a Parapet	= False			

Exposure Constants per Table 26.11-1:

Alpha:	Table 26.11-1 Const	= 9.500	Zg:	Table 26.11-1 Const	= 900.000 ft
At:	Table 26.11-1 Const	= 0.105	Bt:	Table 26.11-1 Const	= 1.000
Am:	Table 26.11-1 Const	= 0.154	Bm:	Table 26.11-1 Const	= 0.650
C:	Table 26.11-1 Const	= 0.200	Eps:	Table 26.11-1 Const	= 0.200

Overhang Inputs:

Std	= Overhangs on all sides are the same	= True
OHType	= Type of Roof Wall Intersections	= Sofit
OH	= Overhang of Roof Beyond Wall	= 2.000 ft

Main Wind Force Resisting System (MWFRS) Calculations per Ch 27 Part 1:

h	= Mean Roof Height above grade	= 12.458 ft
Kh	= Z < 15 ft [4.572 m]--> (2.01 * (15/zg)^(2/Alpha) {Table 26.10-1}	= 0.849
Kzt	= Topographic Factor is 1 since no Topographic feature specified	= 1.000
Kd	= Wind Directionality Factor per Table 26.6-1	= 0.85
Zg	= Elevation above Sea Level	= 0.000 ft
Ke	= Ground Elevation Factor: Ke = e^-(0.0000362*Zg) {Table 26.9-1}	= 1.000
GCPi	= Ref Table 26.13-1 for Enclosed Building	= +/-0.18
RA	= Roof Area	= 2701.43 sq ft
LF	= Load Factor based upon ASD Design	= 0.60
qh	= (0.00256 * Kh * Kzt * Kd * Ke * V^2) * LF	= 33.94 psf
qin	= For Negative Internal Pressure of Enclosed Building use qh*LF	= 33.94 psf
qip	= For Positive Internal Pressure of Enclosed Building use qh*LF	= 33.94 psf

Gust Factor Calculation:

Gust Factor Category I Rigid Structures - Simplified Method		
G1	= For Rigid Structures (Nat. Freq.>1 Hz) use 0.85	= 0.85
Gust Factor Category II Rigid Structures - Complete Analysis		
Zm	= Max(0.6 * Ht, Zmin)	= 15.000 ft
Izm	= Cc * (33 / Zm) ^ 0.167	= 0.228
Lzm	= L * (Zm / 33) ^ Eps	= 427.057
B	= Structure Width Normal to Wind	= 71.000 ft
Q	= (1 / (1 + 0.63 * ((B + Ht) / Lzm)^0.63))^0.5	= 0.903
G2	= 0.925*((1+0.7*Izm*3.4*Q)/(1+0.7*3.4*Izm))	= 0.874

Gust Factor Used in Analysis

G	= Lessor Of G1 Or G2	= 0.850

MWFRS Wind Normal to Ridge (Ref Fig 27.3-1)

h	= Mean Roof Height Of Building	= 12.458 ft
RHt	= Ridge Height Of Roof	= 16.417 ft
B	= Horizontal Dimension Of Building Normal To Wind Direction	= 71.000 ft
L	= Horizontal Dimension Of building Parallel To Wind Direction	= 34.000 ft
L/B	= Ratio Of L/B used For Cp determination	= 0.479
h/L	= Ratio Of h/L used For Cp determination	= 0.366
Slope	= Slope of Roof	= 22.62 Deg
OH_Top_+Y	= Overhang Top +Y (Leeward)	= -0.6, -0.6
OH_Top_-Y	= Overhang Top Windward Edge	= 0.18, -0.29
OH_X	= Overhang Top +/-X Coeff (0 to h/2) (0.000 ft to 2.000 ft)	= -0.18, -0.9
OH_X	= Overhang Top +/-X Coeff (0 to h/2) (2.000 ft to 6.229 ft)	= -0.18, -0.9
OH_X	= Overhang Top +/-X Coeff (h/2 to h) (6.229 ft to 12.458 ft)	= -0.18, -0.9
OH_X	= Overhang Top +/-X Coeff (h to 2h) (12.458 ft to 19.000 ft)	= -0.18, -0.5
OH_X	= Overhang Top +/-X Coeff (h to 2h) (19.000 ft to 24.917 ft)	= -0.18, -0.5
OH_X	= Overhang Top +/-X Coeff (>2h) (>24.917 ft)	= -0.18, -0.3
OH_X	= Overhang Top +/-X Coeff (>2h) (>36.000 ft)	= -0.18, -0.3
Roof_LW	= Roof (Leeward)	= -0.6, -0.6
Roof_WW	= Roof (Windward)	= 0.18, -0.29
Roof_X	= Roof +/-X Coeff (0 to h/2) (2.000 ft to 6.229 ft)	= -0.18, -0.9
Roof_X	= Roof +/-X Coeff (h/2 to h) (6.229 ft to 12.458 ft)	= -0.18, -0.9
Roof_X	= Roof +/-X Coeff (h to 2h) (12.458 ft to 24.917 ft)	= -0.18, -0.5
Roof_X	= Roof +/-X Coeff (>2h) (>24.917 ft)	= -0.18, -0.3
Sofit_-Y	= Overhang Sofit -Y	= 0.8, 0.8

Cp_WW	= Windward Wall Coefficient (All L/B Values)	= 0.80
Cp_LW	= Leward Wall Coefficient using L/B	= -0.50
Cp_SW	= Side Wall Coefficient (All L/B values)	= -0.70
GCpn_WW	= Parapet Combined Net Pressure Coefficient (Windward Parapet)	= 1.50
GCpn_LW	= Parapet Combined Net Pressure Coefficient (Leeward Parapet)	= -1.00

Wall Wind Pressures based On Positive Internal Pressure (+GCPi) - Normal to Ridge
All wind pressures include a load factor of 0.6

Elev ft	Kz	Kzt	qz psf	GCPi	Windward Press psf	Leeward Press psf	Side Press psf	Total Press psf	Minimum Pressure* psf
8.50	0.849	1.000	33.94	0.18	16.97	-20.53	-26.30	37.51	9.60

Wall Wind Pressures based on Negative Internal Pressure (-GCPi) - Normal to Ridge
All wind pressures include a load factor of 0.6

Elev ft	Kz	Kzt	qz psf	GCPi	Windward Press psf	Leeward Press psf	Side Press psf	Total Press psf	Minimum Pressure* psf
8.50	0.849	1.000	33.94	-0.18	29.19	-8.32	-14.09	37.51	9.60

Notes Wall Pressures:
Kz = Velocity Press Exp Coeff
Kzt = Topographical Factor
qz = 0.00256*Kz*Kzt*Kd*V^2
GCPi = Internal Press Coefficient
Side = qh * G * Cp_SW - qip * +GCPi
Windward = qz * G * Cp_WW - qip * +GCPi
Leeward = qh * G * Cp_LW - qip * +GCPi
Total = Windward Press - Leeward Press
* Minimum Pressure: Para 27.1.5 no less than 9.60 psf (Incl LF) applied to Walls
+ Pressures Acting TOWARD Surface
- Pressures Acting AWAY from Surface

Roof Wind Pressures for Positive & Negative Internal Pressure (+/- GCPi) - Normal to Ridge
All wind pressures include a load factor of 0.6

Roof Var	Start Dist ft	End Dist ft	Cp_min	Cp_max	GCPi	Pressure Pn_min* psf	Pressure Pp_min* psf	Pressure Pn_max psf	Pressure Pp_max psf
OH_Top_+Y	N/A	N/A	-0.600	-0.600	0.180	-11.20	-23.42	-11.20	-23.42
OH_Top_+Y	N/A	N/A	-0.600	-0.600	0.180	-11.20	-23.42	-11.20	-23.42
OH_Top_-Y	N/A	N/A	0.180	-0.290	0.180	11.30	-0.92	-2.26	-14.48

OH_Top_-Y	N/A	N/A	0.180	-0.290	0.180	11.30	-0.92	-2.26	-14.48
OH_X (+X)	0.000	2.000	-0.180	-0.900	0.180	0.92	-11.30	-19.86	-32.07
OH_X (-X)	0.000	2.000	-0.180	-0.900	0.180	0.92	-11.30	-19.86	-32.07
OH_X (+X)	2.000	6.229	-0.180	-0.900	0.180	0.92	-11.30	-19.86	-32.07
OH_X (-X)	2.000	6.229	-0.180	-0.900	0.180	0.92	-11.30	-19.86	-32.07
OH_X (+X)	6.229	12.458	-0.180	-0.900	0.180	0.92	-11.30	-19.86	-32.07
OH_X (-X)	6.229	12.458	-0.180	-0.900	0.180	0.92	-11.30	-19.86	-32.07
OH_X (+X)	12.458	19.000	-0.180	-0.500	0.180	0.92	-11.30	-8.32	-20.53
OH_X (-X)	12.458	19.000	-0.180	-0.500	0.180	0.92	-11.30	-8.32	-20.53
OH_X (+X)	19.000	24.917	-0.180	-0.500	0.180	0.92	-11.30	-8.32	-20.53
OH_X (-X)	19.000	24.917	-0.180	-0.500	0.180	0.92	-11.30	-8.32	-20.53
OH_X (+X)	24.917	36.000	-0.180	-0.300	0.180	0.92	-11.30	-2.55	-14.76
OH_X (-X)	24.917	36.000	-0.180	-0.300	0.180	0.92	-11.30	-2.55	-14.76
OH_X (+X)	36.000	38.000	-0.180	-0.300	0.180	0.92	-11.30	-2.55	-14.76
OH_X (-X)	36.000	38.000	-0.180	-0.300	0.180	0.92	-11.30	-2.55	-14.76
Roof_LW	N/A	N/A	-0.600	-0.600	0.180	-11.20	-23.42	-11.20	-23.42
Roof_WW	N/A	N/A	0.180	-0.290	0.180	11.30	-0.92	-2.26	-14.48
Roof_X (+X)	2.000	6.229	-0.180	-0.900	0.180	0.92	-11.30	-19.86	-32.07
Roof_X (-X)	2.000	6.229	-0.180	-0.900	0.180	0.92	-11.30	-19.86	-32.07
Roof_X (+X)	6.229	12.458	-0.180	-0.900	0.180	0.92	-11.30	-19.86	-32.07
Roof_X (-X)	6.229	12.458	-0.180	-0.900	0.180	0.92	-11.30	-19.86	-32.07
Roof_X (+X)	12.458	24.917	-0.180	-0.500	0.180	0.92	-11.30	-8.32	-20.53
Roof_X (-X)	12.458	24.917	-0.180	-0.500	0.180	0.92	-11.30	-8.32	-20.53
Roof_X (+X)	24.917	36.000	-0.180	-0.300	0.180	0.92	-11.30	-2.55	-14.76
Roof_X (-X)	24.917	36.000	-0.180	-0.300	0.180	0.92	-11.30	-2.55	-14.76
Sofit_-Y	N/A	N/A	0.800	0.800	0.180	29.19	16.97	29.19	16.97

Notes Roof Pressures:
Start Dist = Start Dist from Windward Edge End Dist = End Dist from Windward Edge
Cp_Max = Largest Coefficient Magnitude Cp_Min = Smallest Coefficient Magnitude
Pp_max = qh*G*Cp_max - qip*(+GCPi) Pn_max = qh*G*Cp_max - qin*(-GCpi)
Pp_min* = qh*G*Cp_min - qip*(+GCPi) Pn_min* = qh*G*Cp_min - qin*(-GCPi)
OH = Overhang X = Dir along Ridge Y = Dir Perpendcular to Ridge Z = Vertical
* The smaller uplift pressures due to Cp_Min can become critical when wind is combined with roof live load or snow load; load combinations are given in ASCE 7
+ Pressures Acting TOWARD Surface - Pressures Acting AWAY from Surface

MWFRS Wind Parallel to Ridge (Ref Fig 27.3-1)

h	= Mean Roof Height Of Building	= 12.458 ft
RHt	= Ridge Height Of Roof	= 16.417 ft
B	= Horizontal Dimension Of Building Normal To Wind Direction	= 34.000 ft
L	= Horizontal Dimension Of building Parallel To Wind Direction	= 71.000 ft
L/B	= Ratio Of L/B used For Cp determination	= 2.088
h/L	= Ratio Of h/L used For Cp determination	= 0.175
Slope	= Slope of Roof	= 22.62 Deg
Hip_End	= Hipped End Coeff (0 to h/2) (2.000 ft to 6.229 ft)	= -0.18, -0.9
Hip_End	= Hipped End Coeff (h/2 to h) (6.229 ft to 12.458 ft)	= -0.18, -0.9
Hip_End	= Hipped End Coeff (h to 2h) (12.458 ft to 24.917 ft)	= -0.18, -0.5
Hip_End	= Hipped End Coeff (>2h) (>24.917 ft)	= -0.18, -0.3
Hip_End	= Hipped End Coeff (>2h) (>39.500 ft)	= -0.18, -0.3
OH_Bot	= Sofit (Windward Face Only)	= 0.8, 0.8
OH_Top	= Overhang Top Coeff (0 to h/2) (0.000 ft to 2.000 ft)	= -0.18, -0.9
OH_Top	= Overhang Top Coeff (0 to h/2) (2.000 ft to 6.229 ft)	= -0.18, -0.9
OH_Top	= Overhang Top Coeff (h/2 to h) (6.229 ft to 12.458 ft)	= -0.18, -0.9
OH_Top	= Overhang Top Coeff (h to 2h) (12.458 ft to 24.917 ft)	= -0.18, -0.5
OH_Top	= Overhang Top Coeff (>2h) (>24.917 ft)	= -0.18, -0.3
OH_Top	= Overhang Top Coeff (>2h) (>37.500 ft)	= -0.18, -0.3
OH_Top	= Overhang Top Coeff (>2h) (>73.000 ft)	= -0.18, -0.3
Roof	= Roof Coeff (0 to h/2) (2.000 ft to 6.229 ft)	= -0.18, -0.9
Roof	= Roof Coeff (h/2 to h) (6.229 ft to 12.458 ft)	= -0.18, -0.9
Roof	= Roof Coeff (h to 2h) (12.458 ft to 24.917 ft)	= -0.18, -0.5
Roof	= Roof Coeff (>2h) (>24.917 ft)	= -0.18, -0.3
Cp_WW	= Windward Wall Coefficient (All L/B Values)	= 0.80
Cp_LW	= Leward Wall Coefficient using L/B	= -0.30
Cp_SW	= Side Wall Coefficient (All L/B values)	= -0.70
GCpn_WW	= Parapet Combined Net Pressure Coefficient (Windward Parapet)	= 1.50
GCpn_LW	= Parapet Combined Net Pressure Coefficient (Leeward Parapet)	= -1.00

Wall Wind Pressures based On Positive Internal Pressure (+GCPi) - Parallel to Ridge
All wind pressures include a load factor of 0.6

Elev ft	Kz	Kzt	qz psf	GCPi	Windward Press psf	Leeward Press psf	Side Press psf	Total Press psf	Minimum Pressure* psf
8.50	0.849	1.000	33.94	0.18	16.97	-14.64	-26.30	31.61	9.60

Wall Wind Pressures based on Negative Internal Pressure (-GCPi) - Parallel to Ridge
All wind pressures include a load factor of 0.6

Elev ft	Kz	Kzt	qz psf	GCPi	Windward Press psf	Leeward Press psf	Side Press psf	Total Press psf	Minimum Pressure* psf
8.50	0.849	1.000	33.94	-0.18	29.19	-2.42	-14.09	31.61	9.60

Notes Wall Pressures:
Kz = Velocity Press Exp Coeff
qz = 0.00256*Kz*Kzt*Kd*V^2
Side = qh * G * Cp_SW - qip * +GCPi
Leeward = qh * G * Cp_LW - qip * +GCPi
Kzt = Topographical Factor
GCPi = Internal Press Coefficient
Windward = qz * G * Cp_WW - qip * +GCPi
Total = Windward Press - Leeward Press
* Minimum Pressure: Para 27.1.5 no less than 9.60 psf (Incl LF) applied to Walls
+ Pressures Acting TOWARD Surface
- Pressures Acting AWAY from Surface

Roof Wind Pressures for Positive & Negative Internal Pressure (+/- GCPi) - Parallel to Ridge
All wind pressures include a load factor of 0.6

Roof Var	Start Dist ft	End Dist ft	Cp_min	Cp_max	GCPi	Pressure Pn_min* psf	Pressure Pp_min* psf	Pressure Pn_max psf	Pressure Pp_max psf
Hip_End (-X)	2.000	6.229	-0.180	-0.900	0.180	0.92	-11.30	-19.86	-32.07
Hip_End (-X)	6.229	12.458	-0.180	-0.900	0.180	0.92	-11.30	-19.86	-32.07
Hip_End (-X)	12.458	24.917	-0.180	-0.500	0.180	0.92	-11.30	-8.32	-20.53
Hip_End (-X)	24.917	35.500	-0.180	-0.300	0.180	0.92	-11.30	-2.55	-14.76
Hip_End (+X)	39.500	73.000	-0.180	-0.300	0.180	0.92	-11.30	-2.55	-14.76
OH_Bot	N/A	N/A	0.800	0.800	0.180	29.19	16.97	29.19	16.97
OH_Top (-X)	0.000	2.000	-0.180	-0.900	0.180	0.92	-11.30	-19.86	-32.07
OH_Top (-X)	0.000	2.000	-0.180	-0.900	0.180	0.92	-11.30	-19.86	-32.07
OH_Top (-X)	0.000	2.000	-0.180	-0.900	0.180	0.92	-11.30	-19.86	-32.07
OH_Top (-X)	0.000	2.000	-0.180	-0.900	0.180	0.92	-11.30	-19.86	-32.07
OH_Top (+Y)	0.000	2.000	-0.180	-0.900	0.180	0.92	-11.30	-19.86	-32.07
OH_Top (-Y)	0.000	2.000	-0.180	-0.900	0.180	0.92	-11.30	-19.86	-32.07
OH_Top (+Y)	2.000	6.229	-0.180	-0.900	0.180	0.92	-11.30	-19.86	-32.07
OH_Top (-Y)	2.000	6.229	-0.180	-0.900	0.180	0.92	-11.30	-19.86	-32.07
OH_Top (+Y)	6.229	12.458	-0.180	-0.900	0.180	0.92	-11.30	-19.86	-32.07
OH_Top (-Y)	6.229	12.458	-0.180	-0.900	0.180	0.92	-11.30	-19.86	-32.07
OH_Top (+Y)	12.458	24.917	-0.180	-0.500	0.180	0.92	-11.30	-8.32	-20.53
OH_Top (-Y)	12.458	24.917	-0.180	-0.500	0.180	0.92	-11.30	-8.32	-20.53
OH_Top (+Y)	24.917	37.500	-0.180	-0.300	0.180	0.92	-11.30	-2.55	-14.76
OH_Top (-Y)	24.917	37.500	-0.180	-0.300	0.180	0.92	-11.30	-2.55	-14.76
OH_Top (+Y)	37.500	73.000	-0.180	-0.300	0.180	0.92	-11.30	-2.55	-14.76
OH_Top (-Y)	37.500	73.000	-0.180	-0.300	0.180	0.92	-11.30	-2.55	-14.76
OH_Top (+X)	73.000	75.000	-0.180	-0.300	0.180	0.92	-11.30	-2.55	-14.76
OH_Top (+X)	73.000	75.000	-0.180	-0.300	0.180	0.92	-11.30	-2.55	-14.76
OH_Top (+X)	73.000	75.000	-0.180	-0.300	0.180	0.92	-11.30	-2.55	-14.76
OH_Top (+X)	73.000	75.000	-0.180	-0.300	0.180	0.92	-11.30	-2.55	-14.76
OH_Top (+Y)	73.000	75.000	-0.180	-0.300	0.180	0.92	-11.30	-2.55	-14.76
OH_Top (-Y)	73.000	75.000	-0.180	-0.300	0.180	0.92	-11.30	-2.55	-14.76
Roof (+Y)	2.000	6.229	-0.180	-0.900	0.180	0.92	-11.30	-19.86	-32.07
Roof (-Y)	2.000	6.229	-0.180	-0.900	0.180	0.92	-11.30	-19.86	-32.07
Roof (+Y)	6.229	12.458	-0.180	-0.900	0.180	0.92	-11.30	-19.86	-32.07
Roof (-Y)	6.229	12.458	-0.180	-0.900	0.180	0.92	-11.30	-19.86	-32.07
Roof (+Y)	12.458	24.917	-0.180	-0.500	0.180	0.92	-11.30	-8.32	-20.53
Roof (-Y)	12.458	24.917	-0.180	-0.500	0.180	0.92	-11.30	-8.32	-20.53
Roof (+Y)	24.917	73.000	-0.180	-0.300	0.180	0.92	-11.30	-2.55	-14.76
Roof (-Y)	24.917	73.000	-0.180	-0.300	0.180	0.92	-11.30	-2.55	-14.76

Notes Roof Pressures:
Start Dist = Start Dist from Windward Edge End Dist = End Dist from Windward Edge

```
Cp_Max      = Largest Coefficient Magnitude  Cp_Min    = Smallest Coefficient Magnitude
Pp_max      = qh*G*Cp_max - qip*(+GCPi)      Pn_max    = qh*G*Cp_max - qin*(-GCPi)
Pp_min*     = qh*G*Cp_min - qip*(+GCPi)      Pn_min*   = qh*G*Cp_min - qin*(-GCPi)
OH = Overhang   X = Dir along Ridge   Y = Dir Perpendcular to Ridge  Z = Vertical
* The smaller uplift pressures due to Cp_Min can become critical when wind is combined
  with roof live load or snow load;  load combinations are given in ASCE 7
+ Pressures Acting TOWARD Surface          - Pressures Acting AWAY from Surface
```

Components and Cladding (C&C) Calculations per Ch 30 Part 1:

h/W	= Ratio of mean roof height to building width	= 0.366
h/L	= Ratio of mean roof height to building length	= 0.175
h	= Mean Roof Height above grade	= 12.458 ft
Kh	= Z < 15 ft [4.572 m]--> (2.01 * (15/zg)^(2/Alpha) {Table 26.10-1}	= 0.849
Kzt	= Topographic Factor is 1 since no Topographic feature specified	= 1.000
Kd	= Wind Directionality Factor per Table 26.6-1	= 0.85
GCPi	= Ref Table 26.13-1 for Enclosed Building	= +/-0.18
LF	= Load Factor based upon ASD Design	= 0.60
qh	= (0.00256 * Kh * Kzt * Kd * Ke * V^2) * LF	= 33.94 psf
LHD	= Least Horizontal Dimension: Min(B, L)	= 34.000 ft
a1	= Min(0.1 * LHD, 0.4 * h)	= 3.400 ft
a	= Max(a1, 0.04 * LHD, 3 ft [0.9 m])	= 3.400 ft
h/B	= Ratio of mean roof height to least hor dim: h / B	= 0.366

Wind Pressures for C&C Ch 30 Pt 1
All wind pressures include a load factor of 0.6

Description	Zone	Width ft	Span ft	Area sq ft	1/3 Rule	Ref Fig	GCp Max	GCp Min	p Max psf	p Min psf
roof	1	2.000	36.000	432.00	Yes	30.3-2G	0.300	-0.800	16.29	-33.26
roof	2e	2.000	36.000	432.00	Yes	30.3-2G	0.300	-1.000	16.29	-40.05
roof	2r	2.000	36.000	432.00	Yes	30.3-2G	0.300	-1.000	16.29	-40.05
wlf	4	1.000	10.000	33.33	Yes	30.3-1	0.908	-1.008	36.92	-40.31
wlf	5	1.000	10.000	33.33	Yes	30.3-1	0.908	-1.215	36.92	-47.36

```
Area     = Span Length x Effective Width
1/3 Rule = Effective width need not be less than 1/3 of the span length
GCp      = External Pressure Coefficients taken from Figures 30.3-1 through 30.3-7
p        = Wind Pressure:  qh*(GCp - GCpi)  [Eqn 30.3-1]*
* Per Para 30.2.2 the Minimum Pressure for C&C is 9.60 psf [0.460 kPa] (Includes LF)
```

Components and Cladding (C&C) Overhang Calculations per Section 30.9:

h	= Mean Roof Height above grade	= 12.458 ft
Kh	= Z < 15 ft [4.572 m]--> (2.01 * (15/zg)^(2/Alpha) {Table 26.10-1}	= 0.849
Kzt	= Topographic Factor is 1 since no Topographic feature specified	= 1.000
Kd	= Wind Directionality Factor per Table 26.6-1	= 0.85
GCPi	= Ref Table 26.13-1 for Enclosed Building	= +/-0.18
LF	= Load Factor based upon ASD Design	= 0.60
qh	= (0.00256 * Kh * Kzt * Kd * Ke * V^2) * LF	= 33.94 psf

Wind Pressures for C&C per Section 30.9 & Figure 30.3-2
All wind pressures include a load factor of 0.6

Description	Zone	Width ft	Span Length ft	Area sq ft	1/3 Rule	Ref Fig	GCpi +/-	GCp Max	GCp Min	p Max psf	p Min psf
roof	2e_OHS	2.000	2.000	4.00	No	30.3-2G	0.18	0.000	-2.500	9.60	-90.96

```
#_OHS    = Zone # on Overhang w/ Sofit w/ Buildings Internal Pressure (GCPi = +/-0.18)
Area     = Span Length x Effective Width
1/3 Rule = Effective width need not be less than 1/3 of the span length
p        = Wind Pressure:  qh*(GCp - GCpi)*LF  [Eqn 30.3-1]*
* Per Para 30.2.2 the Minimum Pressure for C&C is 9.60 psf [0.460 kPa] (Includes LF)
Values of GCp for overhangs include contributions from both upper and lower surfaces.
```

Title :
Dsgnr:
Description :

Job #
Date: 12:25PM, 4 MAY 22

Scope :

Description

General Information

Code Ref: ACI 530-02

Wall Height	10.00 ft	Seismic Factor	0.0000	f'm	1,500.0 psi
Parapet Height	0.00 ft	Calc of Em = f'm *	900.00	Fs	24,000.0 psi
		Duration Factor	1.000	Special Inspection	
Thickness	8.0 in	Wall Wt Mult.	1.000	Grout @ Rebar Only	
Rebar Size	5			Normal Weight Block	
Rebar Spacing	32 in			Equivalent	
Depth to Rebar	3.810 in @ Center			Solid Thickness	4.900 in

Loads

Uniform Load		Concentric Axial Load		Wind Load	
Dead Load	0.000 #/ft	Dead Load	0.000 #/ft		61.610 psf
Live Load	0.000 #/ft	Live Load	0.000 #/ft		
Load Eccentricity	0.000 in	Roof Load			
Roof Load					

Design Values

E	1,350,000 psi	Rebar Area	0.116 in2	np	0.05462	j	0.90654
n : Es / Em	21.481	Radius of Gyration	2.487 in	k	0.28038	2 / kj	7.86864
Wall Weight	58.000 psf	Moment of Inertia	363.660 in4				

Max Allow Axial Stress = 0.25 f'm (1-(h/140r)^2) * SpInsp	330.45 psi
Allow Masonry Bending Stress = 0.33 f'm * SpInsp =	495.00 psi
Allow Steel Bending Stress =	24,000.00 psi

Load Combination & Stress Details Summary

	Moment	Axial Load	Bending Stresses Steel	Bending Stresses Masonry	Axial Compression
Top of Wall	in-#	lbs	psi	psi	psi
DL + LL	0.0	0.0	0.0	0.0	0.00
DL + LL + Wind	0.0	0.0	0.0	0.0	0.00
DL + LL + Seismic	0.0	0.0	0.0	0.0	0.00
Between Base & Top of Wall					
DL + LL	0.0	290.0	0.0	0.0	4.93
DL + LL + Wind	9,241.5	290.0	23,016.4	417.5	4.93
DL + LL + Seismic	0.0	290.0	0.0	0.0	4.93

Summary

10.00ft high wall with 0.00ft parapet, Normal Block w/ 8.00in wall w/ #5 bars at 32.00ino.c. at center

Max. Bending Compressive Stress	422.39	OK
Allowable	495.00	OK
Max. Axial Only Compressive Stress	4.93	psi
Allowable	330.45	OK
Max Steel Bending Stress	23,016.38	psi
Allowable	24,000.00	OK

Permit Reviews
City of Miami Springs

Permit Number: RES21-1143

Description: **ADDITION TO RESIDENCE AND OVERALL REMODELING TO EXIST RES.**

Applied: **12/10/2021**
Approved:
Site Address: **200 ESPLANADE DRIVE**
Issued:
Finaled:
City, State Zip Code: **MIAMI SPRINGS, FL 33166**
Status: **PLAN REVIEW**
Applicant: **<NONE>**
Parent Permit:
Owner: **JOVANY JIMENEZ & AMBAR SARA PREVAL**
Parent Project:
Contractor: **<NONE>**

Details:

NO SURVEY SUBMITTED

LIST OF REVIEWS

SENT DATE	RETURNED DATE	DUE DATE	TYPE	CONTACT	STATUS	REMARKS
Review Group: AUTO						
12/10/2021	3/17/2022	12/20/2021	BUILDING	ULISES FERNANDEZ	REWORK REQUIRED	
Notes: PROVIDE JOB COST. FURTHER COMPLIANCE W/ FLOOD MAY BE REQUIRED. FURTHER COMMENTS MAY FOLLOW. 1. PLEASE COORDINATE DEMOLITION PLANS TO SHOW ALL ITEMS BEING REMOVED (EX: INTERIOR PARTITIONS AND KITCHEN). 2. ANY ITEMS TO REMAIN, SHALL REQUIRE DETAIL. 3. ON SITE PLAN, PLEASE SHOW DIRECTION OF POWER SERVICE LINE. 4. ON DEMOLITION PLAN, SHOW THAT EXISTING ROOFING & ROOF STRUCTURE SHALL BE DEMOLISHED. 5. SHOW FLOOD CRITERIA ON PLANS. 6. SHOW SHGC & U FACTOR VALUES ON DOOR SCHEDULE FOR GLASS DOORS. 7. SHOW COMPLIANCE WITH SHOWER ACCESS AS PER FBC R P2708.1.1. 8. PLEASE PROVIDE SHOWER CURB DETAIL & SHOW TYPE OF SHOWER ENCLOSURE. 9. SUBMIT NOA FOR PRECAST LINTEL. 10. NOA'S SHALL BE MARKED/HIGHLIGHTED TO SHOW SELECTED MODEL TYPE & FASTENERS. 11. SEE MARK-UPS ON OFFICE COPY. 12. PROVIDE ANSWER SHEET TO COMMENTS WITH LOCATION OF CORRECTIONS ON DESGIN PROFESSIONAL'S LETTER HEAD.						
12/10/2021	2/17/2022	12/20/2021	ELECTRICAL	MIGUEL MENDEZ	REWORK REQUIRED	
Notes: MISSING RECEPTACKS TO COMPLY WITH NEC210.52 SEE MARKING						
12/10/2021	2/17/2022	12/20/2021	MECHANICAL	RON REGULA	APPROVED	
Notes:						
12/10/2021	2/12/2022	12/20/2021	PLUMBING	ELISEO ARES	APPROVED	
Notes: 1-WASHING MACHINE WET-VENT NOT TO CODE. 2-SHOW WATER HEATER DETAL ANS LOCATION ON PLAN. 3-PLASE DONT REMOVE REVIW PAGE.						

Permit Reviews
City of Miami Springs

12/10/2021		12/20/2021	ROOFING	ULISES FERNANDEZ		
Notes:						
12/10/2021	2/24/2022	12/20/2021	STRUCTURE	MISAEL RODRIGUEZ	REWORK REQUIRED	
Notes: PROVIDE STRUCTURAL CALCULATION FOR COMPLETE REVIEW						
12/10/2021	12/14/2021	12/20/2021	ZONING	CHRISTOPHER HEID	APPROVED	
Notes: SURVEY REQUIRED. TABULAR SUMMARY IN COMPARATIVE FORMAT REQUIRED. SEE SAMPLE DATA SHEET ATTACHED.						

OFFICE COPY
CITY OF MIAMI SPRINGS

CITY OF MIAMI SPRINGS
CITY PLANNER
201 WESTWARD DRIVE
MIAMI SPRINGS, FL 33166
(305)805-5034

CITY OF MIAMI SPRINGS
BUILDING DEPARTMENT
DEC 16 2021
RECEIVED

PROJECT DATA

To be submitted with new construction & additions

	ZONING DISTRICT		
		REQUIRED/ ALLOWED	PROVIDED
	NET LOT AREA	7,500	7,500
	PARKING SPACES	3	4
YARDS	FRONT	30'	15.09' exist. condition approved
	SIDE (CORNER)	15'	35.36' exist. condition approved
	SIDE (INTERIOR)	7.50'	7.67' new condition
	SIDE (INTERIOR)		
AREA CALCULATIONS	REAR	25.0'	13.86' approved to match exist. condition
	MINIMUM FLOOR AREA	1,200	2,374
	HEIGHT	25' to ridge	17'-6" proposed
	FRONT YARD PERVIOUS	1,350 60%	2,606 85%
	MAXIMUM LOT COVERAGE	40%	32%
	MINIMUM LANDSCAPED AREA	30%	57%

C:\Users\Alfonso\AppData\Local\Microsoft\Windows\INetCache\Content.Outlook\GTK249R4\PROJECT DATA.doc

U.S. DEPARTMENT OF HOMELAND SECURITY
Federal Emergency Management Agency
National Flood Insurance Program

CITY OF MIAMI SPRINGS
BUILDING DEPARTMENT

DEC 1 4 2021

RECEIVED

OMB No. 1660-0008
Expiration Date: November 30, 2022

ELEVATION CERTIFICATE

Important: Follow the instructions on pages 1-9.

Copy all pages of this Elevation Certificate and all attachments for (1)community official,(2) insurance agent/company and (3)building owner.

SECTION A - PROPERTY INFORMATION			FOR INSURANCE COMPANY USE
A1. Building Owner's Name Jovany Jimenez and Ambar Sara Preval			Policy Number:
A2. Building Street Address (including Apt., Unit, Suite, and/or Bldg. No.) or P.O. Route and Box No. 200 N. Esplanade Drive			Company NAIC Number:
City Miami Springs	State FLORIDA	ZIP Code 33166	

A3. Property Description (Lot and Block numbers, Tax Parcel Number, Legal Description, etc.)
TAX PARCEL ID: 05-3118-016-1590

A4. Building Use (e.g., Residential, Non-Residential, Addition, Accessory, Etc.) Residential

A5. Lattitude/Longitude: Lat. N 25°49'23.49 Long. W 80°17'9.09 Horizontal Datum: ☐ NAD 1927 ☒ NAD 1983

A6. Attach at least 2 photographs of the building if the Certificate is being used to obtain flood insurance

A7. Building Diagram number 1A

A8. For a building with a crawlspace or enclosure(s):

a) Square footage of crawlspace or enclosure(s) 0 Sq. Ft.

b) No. of permanent flood openings in the crawlspace or enclosure(s) within 1.0 foot above adjacent grade 0

c) Total net area of flood openings in A8.b 0 Sq. in.

d) Engineered flood openings? ☐ Yes ☒ No

A9. For a building with an attached garage:

a) Square footage of attached garage N/A Sq. Ft.

b) No. of permanent flood openings in the attached garage within 1.0 foot above adjacent grade N/A

c) Total net area of flood openings in A9.b N/A Sq. In.

d) Engineered flood openings? ☐ Yes ☒ No

SECTION B - FLOOD INSURANCE RATE MAP (FIRM) INFORMATION

B1. NFIP Community Name & Community Number	B2. County Name	B3. State
MIAMI SPRINGS/ 120653	Miami-Dade County	FLORIDA

B4.Map/Panel Number	B5.Suffix	B6.FIRM Index Date	B7.FIRM Panel Effective /Revised Date	B8.Flood Zone(s)	B9.Base Flood elevation(s) (Zone AO, use base flood depth)
12086C0283	L	09/11/2009	09/11/2009	AH	7.0'

B10.Indicate the source of the Base Flood Elevation (BFE) data or base flood depth entered in item B9:
☐ FIS Profile ☒ FIRM ☐ Community Determined ☐ Other (Describe) _____

B11. Indicate elevation datum used for BFE in Item B9: ☒ NGVD 1929 ☐ NAVD 1988 ☐ Other (Describe) _____

B12.Is the building located in a Costal Barrier Resources System (CBRS) area or Otherwise protected Area (OPA)? ☐ Yes ☒ No
Designation Date N/A ☐ CBRS ☐ OPA

ELEVATION CERTIFICATE

OMB No. 1660-0008

Expiration Date: November 30, 2022

IMPORTANT: In these spaces, copy the corresponding information from Section A.			FOR INSURANCE COMPANY USE
Building Street Address (including Apt., Unit, Suite, and/or Bldg. No.) or P.O. Route and Box No. 200 N. Esplanade Drive			Policy Number:
City Miami Springs	State FLORIDA	ZIP Code 33166	Company NAIC Number:

SECTION C - BUILDING ELEVATION INFORMATION (SURVEY REQUIRED)

C1. Building elevations are based on: ☐ Construction Drawings* ☐ Building Under Construction* ☒ Finished Construction

*A new Elevation Certificate will be required when construction of the building is complete.

C2. Elevations - Zones A1-A30, AE, AH, A (with BFE), VE, V1-V30, V (with BFE), AR, AR/A, AR/AE, AR/A1-A30, AR/AH, AR/AO. Complete items C2.a-h below according to the building diagram specified in item A7. IN Puerto Rico only, enter meters.

Benchmark Utilized: FDOT REAL TIME GPS Vertical Datum: NGVD 1929

Indicate elevation datum used for the elevations in items a) through h) below.

☒ NGVD 1929 ☐ NAVD 1988 ☐ Other/Source: _____

Datum used for building elevations must be the same as that used for the BFE.

		Check the measurement used.
a) Top of bottom floor (Including basement, crawlspace, or enclosure floor)	7 . 29	☒ feet ☐ meters
b) Top of the next highest floor	N/A .	☐ feet ☐ meters
c) Bottom of the lowest horizontal structural member (V Zones only)	N/A .	☐ feet ☐ meters
d) Attached Garage (top of slab)	6 . 56	☒ feet ☐ meters
e) Lowest elevation of machinery or equipment servicing the building (Describe type of equipment and location in Comments)	N/A .	☐ feet ☐ meters
f) Lowest adjacent (finished) grade next to building (LAG)	6 . 38	☒ feet ☐ meters
g) Highest adjacent (finished) grade next to building (HAG)	6 . 47	☒ feet ☐ meters
h) Lowest adjacent grade at lowest elevation of deck or stairs including structural support	N/A .	☐ feet ☐ meters

SECTION D – SURVEYOR, ENGINEER, OR ARCHITECT CERTIFICATION

This certification is to be signed and sealed by a land surveyor, engineer, or architect authorized by law to certify elevation information.
I certify that the information on this Certificate represents my best efforts to interpret the data available. I understand that any false statement may be punishable by fine or imprisonment under 18 U.S. Code, Section 1001.

Were latitude and longitude in Section A provided by a licensed land surveyor? ☐ Yes ☒ No ☐ Check here if attachments.

Certifier's Name	License number	
FERNANDO FERNANDEZ	6765	
Title		
PROFESSIONAL SURVEYOR & MAPPER		
Company Name		
ME LAND SURVEYING		
Address		
10665 SW 190th STREET SUITE 3110		
City	State	ZIP Code
MIAMI	FL	33157



Signature	Date	Telephone
	07/29/2021	(305) 740-3319

Copy all pages of this Elevation Certificate and all attachments for (1) community official, (2)insurance agent/company, (3) building owner.

Comments (including type of equipment and location, per C2(e), if applicable)
LATITUDE LONGITUDE PER GOOGLE, ATTACHMENTS = BUILDING PICTURES
VERTCON CONVERSION NAVD 1988 TO NGVD 1929= +1.55'
This elevation certificate is for flood insurance rating purposes only and may not be used for building permitting purposes due to measurement precision issues.

ELEVATION CERTIFICATE

OMB No. 1660-0008

Expiration Date: November 30, 2022

IMPORTANT: In these spaces, copy the corresponding information from Section A.			FOR INSURANCE COMPANY USE
Building Street Address (including Apt., Unit, Suite, and/or Bldg. No.) or P.O. Route and Box No. 200 N. Esplanade Drive			Policy Number:
City Miami Springs	State FLORIDA	ZIP Code 33166	Company NAIC Number:

SECTION E - BUILDING ELEVATION INFORMATION (SURVEY NOT REQUIRED)
FOR ZONE AO AND ZONE A (WITHOUT BFE)

For Zones AO and A (without BFE), complete Items E1–E5. If the Certificate is intended to support a LOMA or LOMR-F request, complete Sections A, B,and C. For Items E1–E4, use natural grade, if available. Check the measurement used. In Puerto Rico only, enter meters.

E1. Provide elevation information for the following and check the appropriate boxes to show whether the elevation is above or below the highest adjacent grade (HAG) and the lowest adjacent grade (LAG).

a) Top of bottom floor (including basement, crawlspace, or enclosure) is _____ . _____ ☐ feet ☐ meters ☐ above or ☐ below the HAG

b) Top of bottom floor (including basement, crawlspace, or enclosure) is _____ . _____ ☐ feet ☐ meters ☐ above or ☐ below the LAG

E2. For Building Diagrams 6-9 with permanent flood openings provided in Section A Items 8 and/or 9 (see pages 8-9 of instructions), the next higher floor (elevation C2.b in the diagrams) of the building is _____ . _____ ☐ feet ☐ meters ☐ above or ☐ below the HAG

E3. Attached garage (top of slab) is _____ . _____ ☐ feet ☐ meters ☐ above or ☐ below the HAG

E4. Top of platform of machinery and/or equipment servicing the building is _____ . _____ ☐ feet ☐ meters ☐ above or ☐ below the HAG

E5. Zone AO only: If no flood depth number is available, is the top of the bottom floor elevated in accordance with the community's floodplain management ordinance?

☐ Yes ☐ No ☒ Unknown. The local official must certify this information in Section G.

SECTION F - PROPERTY OWNER (OR OWNER'S REPRESENTATIVE) CERTIFICATION

The property owner or owner's authorized representative who completes Sections A, B, and E for Zone A (without a FEMA-issued or community-issued BFE) or Zone AO must sign here. *The statements in sections A, B, abd E are correct to the best of my knowledge .*

Property Owner's or Owner's Authorized Representative's Name			
Address	City	State	ZIP Code
Signature	Date	Telephone	

Comments

☐ Check here if attachments.

ELEVATION CERTIFICATE

OMB No. 1660-0008

Expiration Date: November 30, 2022

IMPORTANT: In these spaces, copy the corresponding information from Section A.			FOR INSURANCE COMPANY USE
Building Street Address (including Apt., Unit, Suite, and/or Bldg. No.) or P.O. Route and Box No. 200 N. Esplanade Drive			Policy Number:
City Miami Springs	State FLORIDA	ZIP Code 33166	Company NAIC Number:

SECTION G - COMMUNITY INFORMATION (OPTIONAL)

The local official who is authorized by law or ordinance to administer the community's floodplain management ordinance can complete Sections A, B, C (or E), and G of this Elevation Certificate. Complete the applicable item(s) and sign below. Check measurement used in items G8 - G10. In Puerto Rico only, enter meters.

G1. ☐ The information in Section C was taken from other documentation that has been signed and sealed by a licensed surveyor, engineer, or architect who is authorized by law to certify elevation information. (Indicate the source and date of the elevation data in the Comments area below.)

G2. ☐ A community official completed Section E for a building located in Zone A (without a FEMA-issued or community-issued BFE) or Zone AO.

G3. ☐ The following information (Items G4-G10) is provided for community floodplain management purposes.

G4. Permit Number	G5. Date Permit Issued	G6. Date Certificate Of Complicance/Occupancy Issued

G7. This permit has been issued for: ☐ New Construction ☐ Substantial Improvement

G8. Elevation of as-built lowest floor (including basement) of the building: _____ . _____ ☐ feet ☐ meters Datum _____

G9. BFE or (in Zone AO) depth of flooding at the building site: _____ . _____ ☐ feet ☐ meters Datum _____

G10. Community's design flood elevation _____ . _____ ☐ feet ☐ meters Datum _____

Local Official's Name	Title
Community Name	Telephone
Signature	Date

Comments

☐ Check here if attachments.

ELEVATION CERTIFICATE

BUILDING PHOTOGRAPHS
See Instructions for Item A6.

OMB No. 1660-0008
Expiration Date: November 30, 2022

IMPORTANT: In these spaces, copy the corresponding information from Section A.			FOR INSURANCE COMPANY USE
Building Street Address (including Apt., Unit, Suite, and/or Bldg. No.) or P.O. Route and Box No. 200 N. Esplanade Drive			Policy Number:
City Miami Springs	State FLORIDA	ZIP Code 33166	Company NAIC Number:

If using the Elevation Certificate to obtain NFIP flood insurance, affix at least 2 building photographs below according to the instructions for Item A6. Identify all photographs with date taken; "Front View" and "Rear View"; and, if required, "Right Side View" and "Left Side View." When applicable, photographs must show the foundation with representative examples of the flood openings or vents, as indicated in Section A8. If submitting more photographs than will fit on this page, use the Continuation Page.



Photo One

Photo One Caption Photo Taken 07/27/2021 "Front View"

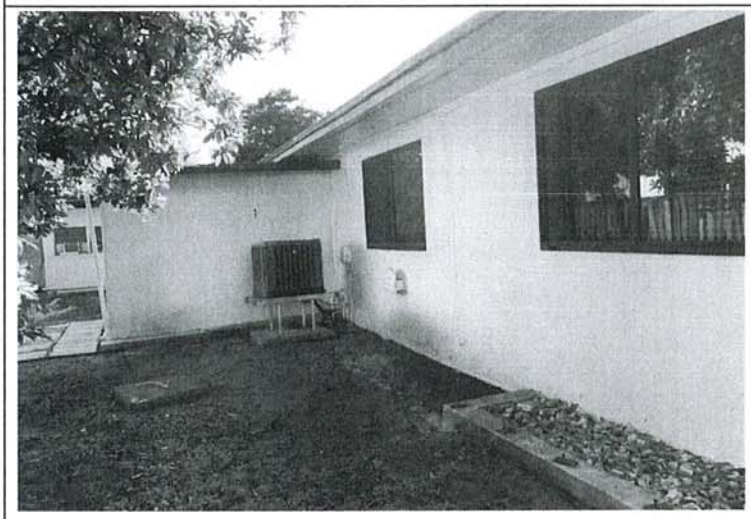

Photo Two

Photo Two Caption Photo Taken 07/27/2021 "Rear View"

ELEVATION CERTIFICATE

BUILDING PHOTOGRAPHS
Continuation Page

OMB No. 1660-0008
Expiration Date: November 30, 2022

IMPORTANT: In these spaces, copy the corresponding information from Section A.			FOR INSURANCE COMPANY USE
Building Street Address (including Apt., Unit, Suite, and/or Bldg. No.) or P.O. Route and Box No. 200 N. Esplanade Drive			Policy Number:
City Miami Springs	State FLORIDA	ZIP Code 33166	Company NAIC Number:

If submitting more photographs than will fit on the preceding page, affix the additional photographs below. Identify all photographs with: date taken; "Front View" and "Rear View"; and, if required, "Right Side View" and "Left Side View." When applicable, photographs must show the foundation with representative examples of the flood openings or vents, as indicated in Section A8.

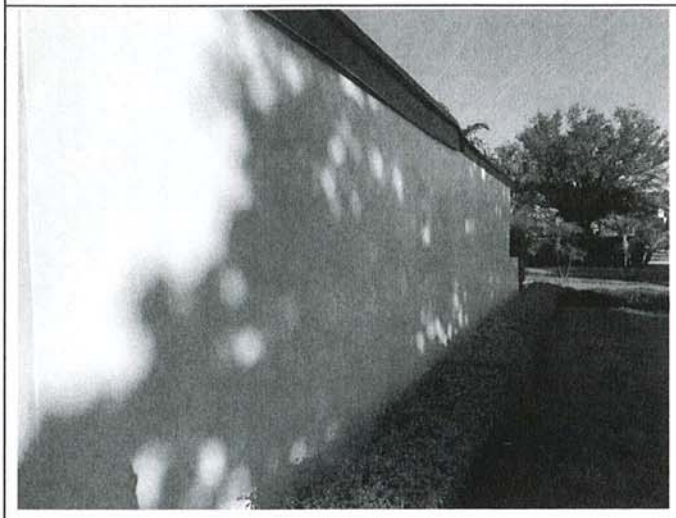

Photo One

Photo One Caption Photo Taken 07/27/2021 "Left View"

Photo Two

Photo Two Caption Photo Taken 07/27/2021 "Right View"

OFFICE COPY
CITY OF MIAMI SPRINGS
CITY OF MIAMI SPRINGS
BUILDING DEPARTMENT
DEC 10 2021
RECEIVED

FORM R405-2020

FLORIDA ENERGY EFFICIENCY CODE FOR BUILDING CONSTRUCTION

Florida Department of Business and Professional Regulation - Residential Performance Method

Project Name:	200 Preval Project	Builder Name:	
Street:	200 N. Esplanade Drive	Permit Office:	Miami Springs Bldg. Dept.
City, State, Zip:	Miami Springs , FL , 33166	Permit Number:	
Owner:	Ambar Preval	Jurisdiction:	232700
Design Location:	FL, Miami	County:	Miami-Dade (Florida Climate Zone 1)

1. New construction or existing	Addition
2. Single family or multiple family	Attached
3. Number of units, if multiple family	1
4. Number of Bedrooms(Bedrms In Addition)	4(2)
5. Is this a worst case?	No
6. Conditioned floor area above grade (ft²)	1907
Conditioned floor area below grade (ft²)	0

7. Windows(215.0 sqft.)	Description	Area
a. U-Factor:	Sgl, U=1.30	121.64 ft²
SHGC:	SHGC=0.50	
b. U-Factor:	Sgl, U=1.20	75.40 ft²
SHGC:	SHGC=0.45	
c. U-Factor:	Dbl, U=1.20	18.00 ft²
SHGC:	SHGC=0.45	
Area Weighted Average Overhang Depth:		4.716 ft.
Area Weighted Average SHGC:		0.478

8. Skylights		Area
c. U-Factor:(AVG)	N/A	ft²
SHGC(AVG):	N/A	

9. Floor Types (1907.0 sqft.)	Insulation	Area
a. Slab-On-Grade Edge Insulation	R=0.0	1907.00 ft²
b. N/A	R=	ft²
c. N/A	R=	ft²

10. Wall Types(1762.6 sqft.)	Insulation	Area
a. Concrete Block - Int Insul, Exterior	R=3.0	1300.50 ft²
b. Concrete Block - Int Insul, Exterior	R=4.1	462.10 ft²
c. N/A	R=	ft²
d. N/A	R=	ft²

11. Ceiling Types (1907.0 sqft.)	Insulation	Area
a. Under Attic (Vented)	R=19.0	1544.00 ft²
b. Under Attic (Vented)	R=30.0	363.00 ft²
c. N/A	R=	ft²

12. Ducts	R	ft²
a. Sup: Attic, Ret: Main, AH: Main	6	365

13. Cooling systems	kBtu/hr	Efficiency
a. Central Unit	57.0	SEER:16.00

14. Heating systems	kBtu/hr	Efficiency
a. Electric Strip Heat	34.0	COP:1.00

15. Hot water systems - Replacement equipment		
a. Electric	Tankless	Cap: 1 gallons
		EF: 0.990
b. Conservation features		
None		
16. Credits		Pstat

Glass/Floor Area: 0.113

Total Proposed Modified Loads: 77.39

Total Baseline Loads: 80.72

PASS

I hereby certify that the plans and specifications covered by this calculation are in compliance with the Florida Energy Code.

PREPARED BY: _____

DATE: 12-4-21

I hereby certify that this building, as designed, is in compliance with the Florida Energy Code.

OWNER/AGENT: _____

DATE: 12-4-21

Review of the plans and specifications covered by this calculation indicates compliance with the Florida Energy Code. Before construction is completed this building will be inspected for compliance with Section 553.908 Florida Statutes.

BUILDING OFFICIAL: _____

DATE: _____

- **Compliance requires certification by the air handler unit manufacturer that the air handler enclosure qualifies as certified factory-sealed in accordance with R403.3.2.1.**
- **Compliance requires an Air Barrier and Insulation Inspection Checklist in accordance with R402.4.1.1 and this project requires an envelope leakage test report with envelope leakage no greater than 5.00 ACH50 (R402.4.1.2).**
- **Compliance with a proposed duct leakage Qn requires a Duct Leakage Test Report confirming duct leakage to outdoors, tested in accordance with ANSI/RESNET/ICC 380, is not greater than 0.030 Qn for whole house.**

FORM R405-2020

INPUT SUMMARY CHECKLIST REPORT

PROJECT

Title:	200 Preval Project	Bedrooms:	4	Address Type:	Street Address
Building Type:	User	Conditioned Area:	1907	Lot #	1 & 2
Owner Name:	Ambar Preval	Total Stories:	1	Block/Subdivision:	58
# of Units:	1	Worst Case:	No	PlatBook:	17, PG 2
Builder Name:		Rotate Angle:	0	Street:	200 N. Esplanade Drive
Permit Office:	Miami Springs Bldg. Dept.	Cross Ventilation:		County:	Miami-Dade
Jurisdiction:	232700	Whole House Fan:		City, State, Zip:	Miami Springs , FL , 33166
Family Type:	Attached				
New/Existing:	Addition				
Comment:					

CLIMATE

√	Design Location	TMY Site	Design Temp 97.5 %	Design Temp 2.5 %	Int Design Temp Winter	Int Design Temp Summer	Heating Degree Days	Design Moisture	Daily Temp Range
_____	FL, Miami	FL_MIAMI_INTL_AP	51	90	70	75	149.5	56	Low

BLOCKS

Number	Name	Area	Volume
1	Block1	1907	15637.4

SPACES

Number	Name	Area	Volume	Kitchen	Occupants	Bedrooms	Infil ID	Finished	Cooled	Heated
1	Main	1544	12660.8	Yes	3	2	1	Yes	Yes	Yes
2	NewSpace2	363	2976.6	No	2	2	1	No	Yes	Yes

FLOORS

√	#	Floor Type	Space	Perimeter	Perimeter R-Value	Area	Joist R-Value	Tile	Wood	Carpet
_____	1	Slab-On-Grade Edge Insulatio	Main	163 ft	0	1544 ft²	----	0.02	0	0.98
_____	2	Slab-On-Grade Edge Insulatio	NewSpace2	56.5 ft	0	363 ft²	----	0.02	0	0.98

ROOF

√	#	Type	Materials	Roof Area	Gable Area	Roof Color	Rad Barr	Solar Absor.	SA Tested	Emitt	Emitt Tested	Deck Insul.	Pitch (deg)
_____	1	Hip	Composition shingles	2066 ft²	0 ft²	Medium	N	0.96	No	0.9	No	0	22.62

ATTIC

√	#	Type	Ventilation	Vent Ratio (1 in)	Area	RBS	IRCC
_____	1	Full attic	Vented	300	1907 ft²	N	N

FORM R405-2020

INPUT SUMMARY CHECKLIST REPORT

CEILING

√	#	Ceiling Type	Space	R-Value	Ins Type	Area	Framing Frac	Truss Type
_____	1	Under Attic (Vented)	Main	19	Blown	1544 ft²	0.11	Wood
_____	2	Under Attic (Vented)	NewSpace2	30	Blown	363 ft²	0.11	Wood

WALLS

√	#	Ornt	Adjacent To	Wall Type	Space	Cavity R-Value	Width Ft	Width In	Height Ft	Height In	Area	Sheathing R-Value	Framing Fraction	Solar Absor.	Below Grade%
____	1	SW	Exterior	Concrete Block - Int Insul	NewSpace2	4.0999	1	5	8	2	11.6 ft²		0	0.75	0
____	2	NW	Exterior	Concrete Block - Int Insul	NewSpace2	4.0999	10	11	8	2	89.2 ft²		0	0.75	0
____	3	NE	Exterior	Concrete Block - Int Insul	NewSpace2	4.0999	33	4	8	2	272.2 ft²		0	0.75	0
____	4	SE	Exterior	Concrete Block - Int Insul	NewSpace2	4.0999	10	11	8	2	89.2 ft²		0	0.75	0
____	5	SE	Exterior	Concrete Block - Int Insul	Main	3	36	6	8	2	298.1 ft²		0	0.75	0
____	6	NE	Exterior	Concrete Block - Int Insul	Main	3	5	4	8	2	43.6 ft²		0	0.75	0
____	7	SE	Exterior	Concrete Block - Int Insul	Main	3	14	8	8	2	119.8 ft²		0	0.75	0
____	8	SW	Exterior	Concrete Block - Int Insul	Main	3	5	4	8	2	43.6 ft²		0	0.75	0
____	9	SE	Exterior	Concrete Block - Int Insul	Main	3	5	4	8	2	43.6 ft²		0	0.75	0
____	10	SW	Exterior	Concrete Block - Int Insul	Main	3	14	6	8	2	118.4 ft²		0	0.75	0
____	11	NW	Exterior	Concrete Block - Int Insul	Main	3	26	10	8	2	219.1 ft²		0	0.75	0
____	12	SW	Exterior	Concrete Block - Int Insul	Main	3	17	5	8	2	142.2 ft²		0	0.75	0
____	13	NW	Exterior	Concrete Block - Int Insul	Main	3	33	4	8	2	272.2 ft²		0	0.75	0

WINDOWS

Orientation shown is the entered, Proposed orientation.

√	#	Ornt	Wall ID	Frame	Panes	NFRC	U-Factor	SHGC	Imp	Area	Overhang Depth	Overhang Separation	Int Shade	Screening
_____	1	NE	3	Metal	Single (Clear)	Yes	1.2	0.45	Y	18.4 ft²	2 ft 0 in	1 ft 2 in	None	None
_____	2	SE	4	Metal	Single (Clear)	Yes	1.3	0.5	Y	18.4 ft²	2 ft 0 in	1 ft 1 in	None	None
_____	3	SE	5	Metal	Single (Clear)	Yes	1.3	0.5	N	18.0 ft²	2 ft 0 in	1 ft 5 in	None	None
_____	4	SE	5	Metal	Single (Clear)	Yes	1.3	0.5	Y	40.0 ft²	2 ft 0 in	1 ft 1 in	None	None
_____	5	SE	7	Metal	Single (Clear)	Yes	1.3	0.5	N	5.2 ft²	2 ft 0 in	1 ft 5 in	None	None
_____	6	NW	11	Metal	Double (Tinted)	Yes	1.2	0.45	Y	18.0 ft²	10 ft 0 in	1 ft 5 in	None	None
_____	7	NW	11	Metal	Single (Clear)	Yes	1.2	0.45	Y	6.0 ft²	10 ft 0 in	1 ft 5 in	None	None
_____	8	NW	11	Metal	Single (Clear)	Yes	1.2	0.45	Y	9.0 ft²	10 ft 0 in	1 ft 5 in	None	None
_____	9	SW	12	Metal	Single (Clear)	Yes	1.3	0.5	Y	40.0 ft²	10 ft 0 in	1 ft 5 in	None	None
_____	10	NW	13	Metal	Single (Clear)	Yes	1.2	0.45	Y	18.0 ft²	2 ft 0 in	1 ft 5 in	None	None
_____	11	NW	13	Metal	Single (Clear)	Yes	1.2	0.45	Y	24.0 ft²	2 ft 0 in	1 ft 5 in	None	None

INFILTRATION

#	Scope	Method	SLA	CFM 50	ELA	EqLA	ACH	ACH 50
1	Wholehouse	Proposed ACH(50)	.00026	1303.1	71.49	134.22	.1068	5

FORM R405-2020

INPUT SUMMARY CHECKLIST REPORT

HEATING SYSTEM

√	#	System Type	Subtype	Speed	Efficiency	Capacity	Block	Ducts
_____	1	Electric Strip Heat/Replaceme	None		COP:1	34 kBtu/hr	1	sys#1

COOLING SYSTEM

√	#	System Type	Subtype	Subtype	Efficiency	Capacity	Air Flow	SHR	Block	Ducts
_____	1	Central Unit/Replacement for	Split	Singl	SEER: 16	57 kBtu/hr	1710 cfm	0.75	1	sys#1

HOT WATER SYSTEM

√	#	System Type	SubType	Location	EF	Cap	Use	SetPnt	Conservation
_____	1	Electric	Tankless	Main	0.99	1 gal	70 gal	120 deg	None

SOLAR HOT WATER SYSTEM

√	FSEC Cert #	Company Name	System Model #	Collector Model #	Collector Area	Storage Volume	FEF
_____	None	None			ft²		

DUCTS

√	#	---- Supply ---- Location	R-Value	Area	---- Return ---- Location	Area	Leakage Type	Air Handler	CFM 25 TOT	CFM25 OUT	QN	RLF	HVAC # Heat	Cool
_____	1	Attic	6	365 ft²	Main	90 ft²	Prop. Leak Free	Main	--- cfm	57.2 cfm	0.03	0.50	1	1

TEMPERATURES

Programable Thermostat: Y

Ceiling Fans:

	Jan	Feb	Mar	Apr	May	Jun	Jul	Aug	Sep	Oct	Nov	Dec
Cooling	[ ]	[ ]	[ ]	[ ]	[ ]	[X]	[X]	[X]	[X]	[ ]	[ ]	[ ]
Heating	[X]	[X]	[X]	[ ]	[ ]	[ ]	[ ]	[ ]	[ ]	[ ]	[X]	[X]
Venting	[ ]	[ ]	[X]	[X]	[ ]	[ ]	[ ]	[ ]	[ ]	[X]	[X]	[ ]

Thermostat Schedule: HERS 2006 Reference

Schedule Type		Hours 1	2	3	4	5	6	7	8	9	10	11	12
Cooling (WD)	AM	78	78	78	78	78	78	78	78	80	80	80	80
	PM	80	80	78	78	78	78	78	78	78	78	78	78
Cooling (WEH)	AM	78	78	78	78	78	78	78	78	78	78	78	78
	PM	78	78	78	78	78	78	78	78	78	78	78	78
Heating (WD)	AM	66	66	66	66	66	68	68	68	68	68	68	68
	PM	68	68	68	68	68	68	68	68	68	68	66	66
Heating (WEH)	AM	66	66	66	66	66	68	68	68	68	68	68	68
	PM	68	68	68	68	68	68	68	68	68	68	66	66

MASS

Mass Type	Area	Thickness	Furniture Fraction	Space
Default(8 lbs/sq.ft.	0 ft²	0 ft	0.3	Main
Default(8 lbs/sq.ft.	0 ft²	0 ft	0.3	NewSpace2

2020 - AIR BARRIER AND INSULATION INSPECTION COMPONENT CRITERIA

TABLE 402.4.1.1
AIR BARRIER AND INSULATION INSPECTION COMPONENT CRITERIA [a]

				CHECK
Project Name:	200 Preval Project	Builder Name:		
Street:	200 N. Esplanade Drive	Permit Office:	Miami Springs Bldg. Dept.	
City, State, Zip:	Miami Springs , FL , 33166	Permit Number:		
Owner:	Ambar Preval	Jurisdiction:	232700	
Design Location:	FL, Miami			

COMPONENT	AIR BARRIER CRITERIA	INSULATION INSTALLATION CRITERIA	
General requirements	A continuous air barrier shall be installed in the building envelope. The exterior thermal envelope contains a continuous air barrier. Breaks or joints in the air barrier shall be sealed.	Air-permeable insulation shall not be used as a sealing material.	
Ceiling/attic	The air barrier in any dropped ceiling/soffit shall be aligned with the insulation and any gaps in the air barrier shall be sealed. Access openings, drop down stairs or knee wall doors to unconditioned attic spaces shall be sealed.	The insulation in any dropped ceiling/soffit shall be aligned with the air barrier.	
Walls	The junction of the foundation and sill plate shall be sealed. The junction of the top plate and the top of exterior walls shall be sealed. Knee walls shall be sealed.	Cavities within corners and headers of frame walls shall be insulated by completely filling the cavity with a material having a thermal resistance of R-3 per inch minimum. Exterior thermal envelope insulation for framed walls shall be installed in substantial contact and continuous alignment with the air barrier.	
Windows, skylights and doors	The space between window/door jambs and framing, and skylights and framing shall be sealed.		✓
Rim joists	Rim joists shall include the air barrier.	Rim joists shall be insulated.	
Floors (including above-garage and cantilevered floors)	The air barrier shall be installed at any exposed edge of insulation.	Floor framing cavity insulation shall be installed to maintain permanent contact with the underside of subfloor decking, or floor framing cavity insulation shall be permitted to be in contact with the top side of sheathing, or continuous insulation installed on the underside of floor framing and extends from the bottom to the top of all perimeter floor framing members.	✓
Crawl space walls	Exposed earth in unvented crawl spaces shall be covered with a Class I vapor retarder with overlapping joints taped.	Where provided instead of floor insulation, insulation shall be permanently attached to the crawlspace walls.	
Shafts, penetrations	Duct shafts, utility penetrations, and flue shafts opening to exterior or unconditioned space shall be sealed.		
Narrow cavities		Batts in narrow cavities shall be cut to fit, or narrow cavities shall be filled by insulation that on installation readily conforms to the available cavity spaces.	
Garage separation	Air sealing shall be provided between the garage and conditioned spaces.		
Recessed lighting	Recessed light fixtures installed in the building thermal envelope shall be sealed to the finished surface.	Recessed light fixtures installed in the building thermal envelope shall be air tight and IC rated.	✓
Plumbing and wiring		Batt insulation shall be cut neatly to fit around wiring and plumbing in exterior walls, or insulation that on installation readily conforms to available space shall extend behind piping and wiring.	✓
Shower/tub on exterior wall	The air barrier installed at exterior walls adjacent to showers and tubs shall separate them from the showers and tubs.	Exterior walls adjacent to showers and tubs shall be insulated.	✓
Electrical/phone box on exterior walls	The air barrier shall be installed behind electrical or communication boxes or air-sealed boxes shall be installed.		✓
HVAC register boots	HVAC supply and return register boots that penetrate building thermal envelope shall be sealed to the sub-floor, wall covering or		✓
Concealed sprinklers	When required to be sealed, concealed fire sprinklers shall only be sealed in a manner that is recommended by the manufacturer. Caulking or other adhesive sealants shall not be used to fill voids between fire sprinkler cover plates and walls or ceilings.		

a. In addition, inspection of log walls shall be in accordance with the provisions of ICC-400.

FORM R405-2020

ENERGY PERFORMANCE LEVEL (EPL) DISPLAY CARD

ESTIMATED ENERGY PERFORMANCE INDEX* = 96

The lower the EnergyPerformance Index, the more efficient the home.

200 N. Esplanade Drive, Miami Springs, FL, 33166

1. New construction or existing		Addition
2. Single family or multiple family		Attached
3. Number of units, if multiple family		1
4. Number of Bedrooms		4(2)
5. Is this a worst case?		No
6. Conditioned floor area (ft²)		1907
7. Windows**	Description	Area
a. U-Factor:	Sgl, U=1.30	121.64 ft²
SHGC:	SHGC=0.50	
b. U-Factor:	Sgl, U=1.20	75.40 ft²
SHGC:	SHGC=0.45	
c. U-Factor:	Dbl, U=1.20	18.00 ft²
SHGC:	SHGC=0.45	
d. U-Factor:	N/A	ft²
SHGC:		
Area Weighted Average Overhang Depth:		4.716 ft.
Area Weighted Average SHGC:		0.478
8. Skylights	Description	Area
a. U-Factor(AVG):	N/A	ft²
SHGC(AVG):	N/A	

9. Floor Types	Insulation	Area
a. Slab-On-Grade Edge Insulation	R=0.0	1907.00 ft²
b. N/A	R=	ft²
c. N/A	R=	ft²

10. Wall Type and Insulation	Insulation	Area
a. Concrete Block - Int Insul, Exterior	R=3.0	1300.50 ft²
b. Concrete Block - Int Insul, Exterior	R=4.1	462.10 ft²
c. N/A	R=	ft²
d. N/A	R=	ft²

11. Ceiling Type and insulation level	Insulation	Area
a. Under Attic (Vented)	R=19.0	1544.00 ft²
b. Under Attic (Vented)	R=30.0	363.00 ft²
c. N/A	R=	ft²

12. Ducts, location & insulation level	R	ft²
a. Sup: Attic, Ret: Main, AH: Main	6	365

13. Cooling systems	kBtu/hr	Efficiency
a. Central Unit	57.0	SEER:16.00

14. Heating systems	kBtu/hr	Efficiency
a. Electric Strip Heat	34.0	COP:1.00

15. Hot water systems - Replacement equipment	
a. Electric	Cap: 1 gallons EF: 0.99
b. Conservation features None	
Credits (Performance method)	Pstat

- @ it's DESIGN STAGE

I certify that this home has complied with the Florida Energy Efficiency Code for Building Construction through the above energy saving features which will be installed (or exceeded) in this home before final inspection. Otherwise, a new EPL Display Card will be completed based on installed Code compliant features.

Builder Signature: _____ Date: 12-4-21

Address of New Home: 200 N. Esplanade Dr. City/FL Zip: Miami Springs FL 33166

*Note: This is not a Building Energy Rating. If your Index is below 70, your home may qualify for energy efficient mortgage (EEM) incentives if you obtain a Florida Energy Rating. For information about the Florida Building Code, Energy Conservation, contact the Florida Building Commission's support staff.

**Label required by Section R303.1.3 of the Florida Building Code, Energy Conservation, if not DEFAULT.

Residential System Sizing Calculation

Summary

Ambar Preval
200 N. Esplanade Drive
Miami Springs, FL 33166

Project Title:
200 Preval Project

12/1/2021

Location for weather data: Miami, FL - Defaults: Latitude(26) Altitude(30 ft.) Temp Range(L)					
Humidity data: Interior RH (50%) Outdoor wet bulb (82F) Humidity difference(57gr.)					
Winter design temperature(MJ8 99%)	52	F	Summer design temperature(MJ8 99%)	112	F
Winter setpoint	70	F	Summer setpoint	75	F
Winter temperature difference	18	F	Summer temperature difference	37	F
Total heating load calculation	**19568**	**Btuh**	**Total cooling load calculation**	**51040**	**Btuh**
Submitted heating capacity	% of calc	Btuh	Submitted cooling capacity	% of calc	Btuh
Total (Electric Strip Heat)	173.8	34000	Sensible (SHR = 0.75)	95.0	42750
			Latent	235.9	14250
			Total	111.7	57000

WINTER CALCULATIONS

Winter Heating Load (for 1907 sqft)

Load component			Load	
Window total	215	sqft	4864	Btuh
Wall total	1548	sqft	4749	Btuh
Door total	0	sqft	0	Btuh
Ceiling total	1907	sqft	1570	Btuh
Floor total	See detail report		4662	Btuh
Infiltration	45	cfm	881	Btuh
Duct loss			2841	Btuh
Subtotal			**19568**	**Btuh**
Ventilation	0	cfm	0	Btuh
TOTAL HEAT LOSS			**19568**	**Btuh**

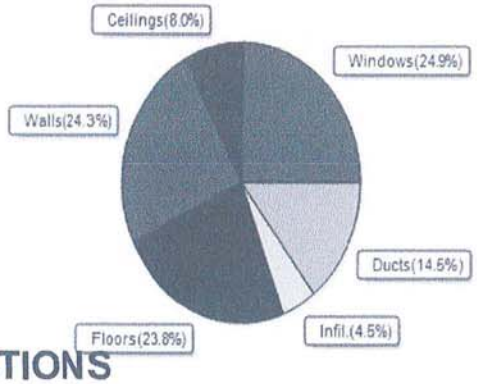

SUMMER CALCULATIONS

Summer Cooling Load (for 1907 sqft)

Load component			Load	
Window total	215	sqft	15072	Btuh
Wall total	1548	sqft	10897	Btuh
Door total	0	sqft	0	Btuh
Ceiling total	1907	sqft	5758	Btuh
Floor total			0	Btuh
Infiltration	33	cfm	1358	Btuh
Internal gain			8150	Btuh
Duct gain			3766	Btuh
Sens. Ventilation	0	cfm	0	Btuh
Blower Load			0	Btuh
Total sensible gain			**45001**	**Btuh**
Latent gain(ducts)			447	Btuh
Latent gain(infiltration)			1293	Btuh
Latent gain(ventilation)			0	Btuh
Latent gain(internal/occupants/other)			4300	Btuh
Total latent gain			**6040**	**Btuh**
TOTAL HEAT GAIN			**51040**	**Btuh**

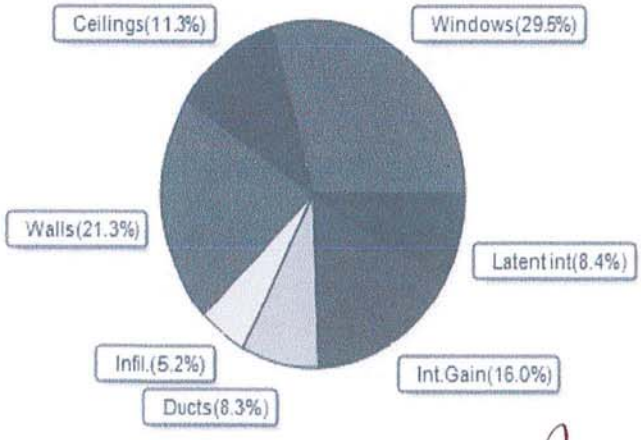

Powered by ACCA MANUAL J

8th Edition

EnergyGauge® System Sizing
PREPARED BY: [signature]
DATE: 12-4-21

EnergyGauge® / USRCZB v7.0.00

System Sizing Calculations - Summer

Residential Load - Room by Room Component Details

Ambar Preval
200 N. Esplanade Drive
Miami Springs, FL 33166

Project Title:
200 Preval Project

12/1/2021

Reference City: Miami, FL Temperature Difference: 37.0F(MJ8 99%) Humidity difference: 57gr.

Component Loads for Room #1: Main

Window	Type* Panes	SHGC	U	InSh	IS	Ornt	Overhang Len	Hgt	Window Area(sqft) Gross	Shaded	Unshaded	HTM Shaded	Unshaded	Load
3	1 NFRC	0.50	1.30	No	No	SE	2.0ft	1.4ft	18.0	13.6	4.4	59	83	1167 Btuh
4	1 NFRC	0.50	1.30	No	No	SE	2.0ft	1.1ft	40.0	15.6	24.4	59	83	2942 Btuh
5	1 NFRC	0.50	1.30	No	No	SE	2.0ft	1.4ft	5.2	5.2	0.0	59	83	309 Btuh
6	2 NFRC	0.45	1.20	No	No	NW	10.0f	1.4ft	18.0	0.0	18.0	54	75	1358 Btuh
7	1 NFRC	0.45	1.20	No	No	NW	10.0f	1.4ft	6.0	0.0	6.0	54	75	453 Btuh
8	1 NFRC	0.45	1.20	No	No	NW	10.0f	1.4ft	9.0	0.0	9.0	54	75	679 Btuh
9	1 NFRC	0.50	1.30	No	No	SW	10.0f	1.4ft	40.0	40.0	0.0	59	83	2357 Btuh
10	1 NFRC	0.45	1.20	No	No	NW	2.0ft	1.4ft	18.0	0.0	18.0	54	75	1358 Btuh
11	1 NFRC	0.45	1.20	No	No	NW	2.0ft	1.4ft	24.0	0.0	24.0	54	75	1810 Btuh
	Window Total								178 (sqft)					12433 Btuh

Walls	Type	U-Value	R-Value Cav/Sheath	Area(sqft)	HTM	Load
5	Concrete Blk,Hollow - Ext	0.18	3.0/0.0	240.1	7.4	1770 Btuh
6	Concrete Blk,Hollow - Ext	0.18	3.0/0.0	43.6	7.4	321 Btuh
7	Concrete Blk,Hollow - Ext	0.18	3.0/0.0	114.5	7.4	845 Btuh
8	Concrete Blk,Hollow - Ext	0.18	3.0/0.0	43.6	7.4	321 Btuh
9	Concrete Blk,Hollow - Ext	0.18	3.0/0.0	43.6	7.4	321 Btuh
10	Concrete Blk,Hollow - Ext	0.18	3.0/0.0	118.4	7.4	873 Btuh
11	Concrete Blk,Hollow - Ext	0.18	3.0/0.0	186.1	7.4	1373 Btuh
12	Concrete Blk,Hollow - Ext	0.18	3.0/0.0	102.2	7.4	754 Btuh
13	Concrete Blk,Hollow - Ext	0.18	3.0/0.0	230.2	7.4	1698 Btuh
	Wall Total			1122 (sqft)		8276 Btuh

Ceilings	Type/Color/Surface	U-Value	R-Value	Area(sqft)	HTM	Load
1	Vented Attic/Light/Shingle	0.049	19.0/0.0	1544.0	3.24	4995 Btuh
	Ceiling Total			1544 (sqft)		4995 Btuh

Floors	Type	R-Value	Size	HTM	Load
1	Slab On Grade	0.0	1544 (ft-perimeter)	0.0	0 Btuh
	Floor Total		1544.0 (sqft)		0 Btuh
				Zone Envelope Subtotal:	25704 Btuh

Infiltration	Type	Wholehouse ACH	Volume(cuft)	Wall Ratio	CFM=	Load
	Natural	0.13	12661	0.73	24.2	985 Btuh

Internal gain	Occupants	Btuh/occupant		Appliance	Load
	3	X 230	+	4600	5290 Btuh
			Sensible Envelope Load:		31978 Btuh
Duct load	Extremely sealed, Supply(R6.0-Attic), Return(R6.0-Cond.)			(DGM of 0.091)	2921 Btuh
				Sensible Zone Load	**34899 Btuh**

Manual J Summer Calculations

Residential Load - Component Details (continued)

Ambar Preval
200 N. Esplanade Drive
Miami Springs, FL 33166

Project Title:
200 Preval Project

Climate:FL_MIAMI_INTL_AP

12/1/2021

Component Loads for Room #2: NewSpace2

Window	Type* Panes	SHGC	U	InSh	IS	Ornt	Overhang Len	Hgt	Window Area(sqft) Gross	Shaded	Unshaded	HTM Shaded	Unshaded	Load
1	1 NFRC	0.45,	1.20	No	No	NE	2.0ft	1.2ft	18.4	0.0	18.4	54	75	1388 Btuh
2	1 NFRC	0.50,	1.30	No	No	SE	2.0ft	1.1ft	18.4	11.5	7.0	59	83	1251 Btuh
	Window Total								37 (sqft)					2639 Btuh

Walls	Type	U-Value	R-Value Cav/Sheath	Area(sqft)	HTM	Load
1	Concrete Blk,Hollow - Ext	0.15	4.1/0.0	11.6	6.2	71 Btuh
2	Concrete Blk,Hollow - Ext	0.15	4.1/0.0	89.2	6.2	549 Btuh
3	Concrete Blk,Hollow - Ext	0.15	4.1/0.0	253.8	6.2	1564 Btuh
4	Concrete Blk,Hollow - Ext	0.15	4.1/0.0	70.8	6.2	436 Btuh
	Wall Total			425 (sqft)		2621 Btuh

Ceilings	Type/Color/Surface	U-Value	R-Value	Area(sqft)	HTM	Load
2	Vented Attic/Light/Shingle	0.032	30.0/0.0	363.0	2.10	763 Btuh
	Ceiling Total			363 (sqft)		763 Btuh

Floors	Type	R-Value	Size	HTM	Load
2	Slab On Grade	0.0	363 (ft-perimeter)	0.0	0 Btuh
	Floor Total		363.0 (sqft)		0 Btuh
			Zone Envelope Subtotal:		6023 Btuh

Infiltration	Type	Wholehouse ACH	Volume(cuft)	Wall Ratio	CFM=	Load
	Natural	0.13	2977	0.27	9.2	373 Btuh
Internal gain	Occupants	Btuh/occupant			Appliance	Load
	2	X 230	+		2400	2860 Btuh
				Sensible Envelope Load:		9256 Btuh
Duct load	Extremely sealed, Supply(R6.0-Attic), Return(R6.0-Cond.)				(DGM of 0.091)	845 Btuh
				Sensible Zone Load		**10102 Btuh**

Manual J Summer Calculations

Residential Load - Component Details (continued)

Ambar Preval
200 N. Esplanade Drive
Miami Springs, FL 33166

Project Title:
200 Preval Project

Climate:FL_MIAMI_INTL_AP

12/1/2021

WHOLE HOUSE TOTALS

	Sensible Envelope Load All Zones	**41235 Btuh**
	Sensible Duct Load	3766 Btuh
	Total Sensible Zone Loads	**45001 Btuh**
	Sensible ventilation	0 Btuh
	Blower	0 Btuh
Whole House	**Total sensible gain**	**45001 Btuh**
Totals for Cooling	Latent infiltration gain (for 57 gr. humidity difference)	1293 Btuh
	Latent ventilation gain	0 Btuh
	Latent duct gain	447 Btuh
	Latent occupant gain (5.0 people @ 200 Btuh per person)	1000 Btuh
	Latent other gain	3300 Btuh
	Latent total gain	**6040 Btuh**
	TOTAL GAIN	**51040 Btuh**

EQUIPMENT

1. Central Unit	#	57000 Btuh

*Key: Window types (Panes - Number and type of panes of glass)
(SHGC - Shading coefficient of glass as SHGC numerical value)
(U - Window U-Factor)
(InSh - Interior shading device: none(No), Blinds(B), Draperies(D) or Roller Shades(R))
- For Blinds: Assume medium color, half closed
For Draperies: Assume medium weave, half closed
For Roller shades: Assume translucent, half closed
(IS - Insect screen: none(N), Full(F) or Half(½))
(Ornt - compass orientation)

Powered by ACCA MANUAL J

Version 8

System Sizing Calculations - Winter

Residential Load - Room by Room Component Details

Ambar Preval
200 N. Esplanade Drive
Miami Springs, FL 33166

Project Title:
200 Preval Project
Building Type: User

12/1/2021

Reference City: Miami, FL (Defaults) Winter Temperature Difference: 18.0 F (MJ8 99%)

Component Loads for Room #1: Main

Window	Panes/Type	Frame	U	Orientation	Area(sqft) X	HTM=	Load
3	1, NFRC 0.50	Metal	1.30	SE	18.0	23.4	421 Btuh
4	1, NFRC 0.50	Metal	1.30	SE	40.0	23.4	936 Btuh
5	1, NFRC 0.50	Metal	1.30	SE	5.2	23.4	123 Btuh
6	2, NFRC 0.45	Metal	1.20	NW	18.0	21.6	389 Btuh
7	1, NFRC 0.45	Metal	1.20	NW	6.0	21.6	130 Btuh
8	1, NFRC 0.45	Metal	1.20	NW	9.0	21.6	194 Btuh
9	1, NFRC 0.50	Metal	1.30	SW	40.0	23.4	936 Btuh
10	1, NFRC 0.45	Metal	1.20	NW	18.0	21.6	389 Btuh
11	1, NFRC 0.45	Metal	1.20	NW	24.0	21.6	518 Btuh
	Window Total				178.2(sqft)		4036 Btuh

Walls	Type	Ornt.	Ueff.	R-Value (Cav/Sh)	Area X	HTM=	Load
5	Conc Blk,Hollow	- Ext	(0.179)	3.0/0.0	240	3.21	772 Btuh
6	Conc Blk,Hollow	- Ext	(0.179)	3.0/0.0	44	3.21	140 Btuh
7	Conc Blk,Hollow	- Ext	(0.179)	3.0/0.0	115	3.21	368 Btuh
8	Conc Blk,Hollow	- Ext	(0.179)	3.0/0.0	44	3.21	140 Btuh
9	Conc Blk,Hollow	- Ext	(0.179)	3.0/0.0	44	3.21	140 Btuh
10	Conc Blk,Hollow	- Ext	(0.179)	3.0/0.0	118	3.21	381 Btuh
11	Conc Blk,Hollow	- Ext	(0.179)	3.0/0.0	186	3.21	598 Btuh
12	Conc Blk,Hollow	- Ext	(0.179)	3.0/0.0	102	3.21	329 Btuh
13	Conc Blk,Hollow	- Ext	(0.179)	3.0/0.0	230	3.21	740 Btuh
	Wall Total				1122(sqft)		3607 Btuh

Ceilings	Type/Color/Surface	Ueff.	R-Value	Area X	HTM=	Load
1	Vented Attic/L/Shing	(0.049)	19.0/0.0	1544	0.9	1362 Btuh
	Ceiling Total			1544(sqft)		1362Btuh

Floors	Type	Ueff.	R-Value	Size X	HTM=	Load
1	Slab On Grade	(1.180)	0.0	163.0 ft(perim.)	21.2	3462 Btuh
	Floor Total			1544 sqft		3462 Btuh

	Room Envelope Subtotal:	12467 Btuh

Infiltration	Type	Wholehouse ACH	Room Volume	Wall Ratio	CFM=	
	Natural	0.17	12661	0.73	32.3	639 Btuh

Duct load	Extremely sealed, Supply(R6.0-Attic), Return(R6.0-Cond.)	(DLM of 0.170)	2226 Btuh

Room #1	**Sensible Room Subtotal**	**15332 Btuh**

Manual J Winter Calculations

Residential Load - Component Details (continued)

Ambar Preval
200 N. Esplanade Drive
Miami Springs, FL 33166

Project Title:
200 Preval Project
Building Type: User

12/1/2021

Component Loads for Room #2: NewSpace2

Window	Panes/Type	Frame	U	Orientation	Area(sqft) X	HTM=	Load
1	1, NFRC 0.45	Metal	1.20	NE	18.4	21.6	398 Btuh
2	1, NFRC 0.50	Metal	1.30	SE	18.4	23.4	431 Btuh
	Window Total				36.8(sqft)		828 Btuh
Walls	Type	Ornt.	Ueff.	R-Value (Cav/Sh)	Area X	HTM=	Load
1	Conc Blk,Hollow	- Ext	(0.149)	4.1/0.0	12	2.69	31 Btuh
2	Conc Blk,Hollow	- Ext	(0.149)	4.1/0.0	89	2.69	239 Btuh
3	Conc Blk,Hollow	- Ext	(0.149)	4.1/0.0	254	2.69	682 Btuh
4	Conc Blk,Hollow	- Ext	(0.149)	4.1/0.0	71	2.69	190 Btuh
	Wall Total				425(sqft)		1142 Btuh
Ceilings	Type/Color/Surface		Ueff.	R-Value	Area X	HTM=	Load
2	Vented Attic/L/Shing		(0.032)	30.0/0.0	363	0.6	208 Btuh
	Ceiling Total				363(sqft)		208Btuh
Floors	Type		Ueff.	R-Value	Size X	HTM=	Load
2	Slab On Grade		(1.180)	0.0	56.5 ft(perim.)	21.2	1200 Btuh
	Floor Total				363 sqft		1200 Btuh
					Room Envelope Subtotal:		3379 Btuh
Infiltration	Type	Wholehouse ACH		Room Volume	Wall Ratio	CFM=	
	Natural	0.17		2977	0.27	12.2	242 Btuh
Duct load	Extremely sealed, Supply(R6.0-Attic), Return(R6.0-Cond.)					(DLM of 0.170)	615 Btuh
Room #2				**Sensible Room Subtotal**			**4236 Btuh**

WHOLE HOUSE TOTALS

Totals for Heating	Subtotal Sensible Heat Loss	19568 Btuh
	Ventilation Sensible Heat Loss	0 Btuh
	Total Heat Loss	19568 Btuh

Manual J Winter Calculations

Residential Load - Component Details (continued)

Ambar Preval
200 N. Esplanade Drive
Miami Springs, FL 33166

Project Title:
200 Preval Project
Building Type: User

12/1/2021

EQUIPMENT		
1. Electric Strip Heat		34000 Btuh

Key: Window types - NFRC (Requires U-Factor and Shading coefficient(SHGC) of glass as numerical values)
or - Glass as 'Clear' or 'Tint' (Uses U-Factor and SHGC defaults)
U - (Window U-Factor)
HTM - (ManualJ Heat Transfer Multiplier)

Powered by ACCA MANUAL J8

Version 8

RESIDENTIAL ENERGY CONSERVATION CODE DOCUMENTATION CHECKLIST

Florida Department of Business and Professional Regulation
Simulated Performance Alternative (Performance) Method

Applications for compliance with the 2020 Florida Building Code, Energy Conservation via the Residential Simulated Performance Alternative shall include:

- ☑ *This checklist*
- ☑ *Form R405-2020 report*
- ☑ *Input summary checklist that can be used for field verification (usually four pages/may be greater)*
- ☑ *Energy Performance Level (EPL) Display Card (one page)*
- ☑ *HVAC system sizing and selection based on ACCA Manual S or per exceptions provided in Section R403.7*
- ☑ *Mandatory Requirements (five pages)*

Required prior to CO:

- ☐ *Air Barrier and Insulation Inspection Component Criteria checklist (Table R402.4.1.1 - one page)*
- ☐ *A completed 2020 Envelope Leakage Test Report (usually one page); exception in R402.4 allows dwelling units of R-2 Occupancies and multiple attached single family dwellings to comply with Section C402.5*
  Testing is not required for additions in which the new construction is less than 85% of the thermal envelope. (R402.4.1.2, Florida Energy Code)
- ☐ *If Form R405 duct leakage type indicates anything other than "default leakage", then a completed 2020 Duct Leakage Test Report - Performance Method (usually one page)*

Envelope Leakage Test Report (Blower Door Test)
Residential Prescriptive, Performance or ERI Method Compliance
2020 Florida Building Code, Energy Conservation, 7th Edition

Jurisdiction: 232700	Permit #:

Job Information

Builder:	Community:	Lot: NA
Address: 200 N. Esplanade Drive		
City: Miami Springs	State: FL	Zip: 33166

Air Leakage Test Results *Passing results must meet either the Performance, Prescriptive, or ERI Method*

○ **PRESCRIPTIVE METHOD**-The building or dwelling unit shall be tested and verified as having an air leakage rate of not exceeding 7 air changes per hour at a pressure of 0.2 inch w.g. (50 Pascals) in Climate Zones 1 and 2.

○ **PERFORMANCE or ERI METHOD**-The building or dwelling unit shall be tested and verified as having an air leakage rate of not exceeding the selected ACH(50) value, as shown on Form R405-2020 (Performance) or R406-2020 (ERI), section labeled as infiltration, sub-section ACH50.

ACH(50) specified on Form R405-2020-Energy Calc (Performance) or R406-2020 (ERI): 5.000

_____ (CFM(50)) x 60 ÷ 15637 (Building Volume) = _____ (ACH(50))

☐ **PASS**

☐ When ACH(50) is less than 3, Mechanical Ventilation installation must be verified by building department.

Method for calculating building volume:

○ Retrieved from architectural plans

● Code software calculated

○ Field measured and calculated

R402.4.1.2 Testing. Testing shall be conducted in accordance with ANSI/RESNET/ICC 380 and reported at a pressure of 0.2 inch w.g. (50 Pascals). Testing shall be conducted by either individuals as defined in Section 553.993(5) or (7), *Florida Statues*.or individuals licensed as set forth in Section 489.105(3)(f), (g), or (i) or an approved third party. A written report of the results of the test shall be signed by the party conducting the test and provided to the*code official*. Testing shall be performed at any time after creation of all penetrations of the *building thermal envelope*.

During testing:
1. Exterior windows and doors, fireplace and stove doors shall be closed, but not sealed, beyond the intended weatherstripping or other infiltration control measures.
2. Dampers including exhaust, intake, makeup air, back draft and flue dampers shall be closed, but not sealed beyond intended infiltration control measures.
3. Interior doors, if installed at the time of the test, shall be open.
4. Exterior doors for continuous ventilation systems and heat recovery ventilators shall be closed and sealed.
5. Heating and cooling systems, if installed at the time of the test, shall be turned off.
6. Supply and return registers, if installed at the time of the test, shall be fully open.

Testing Company

Company Name: _____ Phone: _____

I hereby verify that the above Air Leakage results are in accordance with the 2020 7th Edition Florida Building Code Energy Conservation requirements according to the compliance method selected above.

Signature of Tester: _____ Date of Test: _____

Printed Name of Tester: _____

License/Certification #: _____ Issuing Authority: _____

Duct Leakage Test Report

Residential Prescriptive, Performance or ERI Method Compliance
2020 Florida Building Code, Energy Conservation, 7th Edition

Jurisdiction: 232700	Permit #:

Job Information

Builder: Community: Lot: NA

Address: 200 N. Esplanade Drive

City: Miami Springs State: FL Zip: 33166

Duct Leakage Test Results

System 1	_____	cfm25
System 2	_____	cfm25
System 3	_____	cfm25
Sum of others	_____	cfm25
Total of all	_____	cfm25

_____ (Total of all systems) ÷ 1907 (Total Conditioned Square Footage) = _____ Qn

☐ **PASS** ☐ **FAIL**

○ **Prescriptive Method** cfm25 (Total)

To qualify as "substantially leak free" Qn Total must be less than or equal to 0.04 if air handler unit is installed. If air handler unit is not installed, Qn Total must be less than or equal to 0.03. This testing method meets the requirements in accordance with Section R403.3.3.

Is the air handler unit installed during testing? ☐ YES ($\leq \frac{.04}{Qn}$) ☐ NO ($\leq \frac{.03}{Qn}$)

○ **Performance/ERI Method** cfm25 (Out or Total)

To qualify using this method, Qn must not be greater than the proposed duct leakage Qn specified on Form R405-2020 or R406-2020.

Leakage Type selected on Form R405-2020 (EnergyCalc) or R406-2020	*Qn specified on Form R405-2020 (EnergyCalc) or R406-2020*
Proposed Leak Free	0.03

Duct tightness shall be verified by testing in accordance with ANSI/RESNET/ICC380 by either individuals as defined in Section 553.993(5) or (7), Florida Statutes, or individuals licensed as set forth in Section 489.105(3)(f), (g) or (i), Florida Statutes.

Testing Company

Company Name: _____ Phone: _____

I hereby verify that the above duct leakage testing results are in accordance with the Florida Building Code requirements with the selected compliance path as stated above, either the Prescriptive Method or Performance Method.

Signature of Tester: _____ Date of Test: _____

Printed Name of Tester: _____

License/Certification #: _____ Issuing Authority: _____

Florida Building Code, Energy Conservation, 7th Edition (2020)
Mandatory Requirements for Residential Performance, Prescriptive and ERI Methods

ADDRESS:	200 N. Esplanade Drive Miami Springs , FL , 33166	Permit Number:

MANDATORY REQUIREMENTS - See individual code sections for full details.

SECTION R401 GENERAL

☑ **R401.3 Energy Performance Level (EPL) display card (Mandatory).** The building official shall require that an energy performance level (EPL) display card be completed and certified by the builder to be accurate and correct before final approval of the building for occupancy. Florida law (Section 553.9085, Florida Statutes) requires the EPL display card to be included as an addendum to each sales contract for both presold and nonpresold residential buildings. The EPL display card contains information indicating the energy performance level and efficiencies of components installed in a dwelling unit. The building official shall verify that the EPL display card completed and signed by the builder accurately reflects the plans and specifications submitted to demonstrate code compliance for the building. A copy of the EPL display card can be found in Appendix RD.

SECTION R402 BUILDING THERMAL ENVELOPE

☑ **R402.4 Air leakage (Mandatory).** The building thermal envelope shall be constructed to limit air leakage in accordance with the requirements of Sections R402.4.1 through R402.4.5.

Exception: Dwelling units of R-2 Occupancies and multiple attached single family dwellings shall be permitted to comply with Section C402.5.

☐ **R402.4.1 Building thermal envelope.**The building thermal envelope shall comply with Sections R402.4.1.1 and R402.4.1.2. The sealing methods between dissimilar materials shall allow for differential expansion and contraction.

☐ **R402.4.1.1 Installation.** The components of the building thermal envelope as listed in Table R402.4.1.1 shall be installed in accordance with the manufacturer's instructions and the criteria listed in Table R402.4.1.1, as applicable to the method of construction. Where required by the code official, an approved third party shall inspect all components and verify compliance.

☐ **R402.4.1.2 Testing.** The building or dwelling unit shall be tested and verified as having an air leakage rate not exceeding seven air changes per hour in Climate Zones 1 and 2, and three air changes per hour in Climate Zones 3 through 8. Testing shall be conducted in accordance with ANSI/RESNET/ICC 380 and reported at a pressure of 0.2 inch w.g. (50 pascals). Testing shall be conducted by either individuals as defined in Section 553.993(5) or (7), Florida Statutes, or individuals licensed as set forth in Section 489.105(3)(f), (g) or (i) or an approved third party. A written report of the results of the test shall be signed by the party conducting the test and provided to the code official. Testing shall be performed at any time after creation of all penetrations of the building thermal envelope.

Exception: Testing is not required for additions, alterations, renovations, or repairs, of the building thermal envelope of existing buildings in which the new construction is less than 85 percent of the building thermal envelope.

During testing:
1. Exterior windows and doors, fireplace and stove doors shall be closed, but not sealed, beyond the intended weatherstripping or other infiltration control measures.
2. Dampers including exhaust, intake, makeup air, backdraft and flue dampers shall be closed, but not sealed beyond intended infiltration control measures.
3. Interior doors, if installed at the time of the test, shall be open.
4. Exterior doors for continuous ventilation systems and heat recovery ventilators shall be closed and sealed.
5. Heating and cooling systems, if installed at the time of the test, shall be turned off.
6. Supply and return registers, if installed at the time of the test, shall be fully open.

☐ **R402.4.2 Fireplaces.** New wood-burning fireplaces shall have tight-fitting flue dampers or doors, and outdoor combustion air. Where using tight-fitting doors on factory-built fireplaces listed and labeled in accordance with UL 127, the doors shall be tested and listed for the fireplace. Where using tight-fitting doors on masonry fireplaces, the doors shall be listed and labeled in accordance with UL 907.

☑ **R402.4.3 Fenestration air leakage.** Windows, skylights and sliding glass doors shall have an air infiltration rate of no more than 0.3 cfm per square foot (1.5 L/s/m2), and swinging doors no more than 0.5 cfm per square foot (2.6 L/s/m2), when tested according to NFRC 400 or AAMA/ WDMA/CSA 101/I.S.2/A440 by an accredited, independent laboratory and listed and labeled by the manufacturer.

Exception: Site-built windows, skylights and doors.

MANDATORY REQUIREMENTS - (Continued)

☐ **R402.4.4 Rooms containing fuel-burning appliances.** In Climate Zones 3 through 8, where open combustion air ducts provide combustion air to open combustion fuel burning appliances, the appliances and combustion air opening shall be located outside the building thermal envelope or enclosed in a room, isolated from inside the thermal envelope. Such rooms shall be sealed and insulated in accordance with the envelope requirements of Table R402.1.2, where the walls, floors and ceilings shall meet not less than the basement wall R-value requirement. The door into the room shall be fully gasketed and any water lines and ducts in the room insulated in accordance with Section R403. The combustion air duct shall be insulated where it passes through conditioned space to a minimum of R-8.

Exceptions:

1. Direct vent appliances with both intake and exhaust pipes installed continuous to the outside.
2. Fireplaces and stoves complying with Section R402.4.2 and Section R1006 of the Florida Building Code, Residential.

☑ **R402.4.5 Recessed lighting.** Recessed luminaires installed in the building thermal envelope shall be sealed to limit air leakage between conditioned and unconditioned spaces. All recessed luminaires shall be IC-rated and labeled as having an air leakage rate not more than 2.0 cfm (0.944 L/s) when tested in accordance with ASTM E283 at a 1.57 psf (75 Pa) pressure differential. All recessed luminaires shall be sealed with a gasket or caulk between the housing and the interior wall or ceiling covering.

SECTION R403 SYSTEMS

R403.1 Controls.

☑ **R403.1.1 Thermostat provision (Mandatory).** At least one thermostat shall be provided for each separate heating and cooling system.

☐ **R403.1.3 Heat pump supplementary heat (Mandatory).** Heat pumps having supplementary electric-resistance heat shall have controls that, except during defrost, prevent supplemental heat operation when the heat pump compressor can meet the heating load.

☑ **R403.3.2 Sealing (Mandatory)** All ducts, air handlers, filter boxes and building cavities that form the primary air containment passageways for air distribution systems shall be considered ducts or plenum chambers, shall be constructed and sealed in accordance with Section C403.2.9.2 of the Commercial Provisions of this code and shall be shown to meet duct tightness criteria below.

Duct tightness shall be verified by testing in accordance with ANSI/RESNET/ICC 380 by either individuals as defined in Section 553.993(5) or (7), Florida Statutes, or individuals licensed as set forth in Section 489.105(3)(f), (g) or (i), Florida Statutes, to be "substantially leak free" in accordance with Section R403.3.3.

☑ **R403.3.2.1 Sealed air handler.** Air handlers shall have a manufacturer's designation for an air leakage of no more than 2 percent of the design airflow rate when tested in accordance with ASHRAE 193.

☐ **R403.3.3 Duct testing (Mandatory).** Ducts shall be pressure tested to determine air leakage by one of the following methods:

1. Rough-in test: Total leakage shall be measured with a pressure differential of 0.1 inch w.g. (25 Pa) across the system, including the manufacturer's air handler enclosure if installed at the time of the test. All registers shall be taped or otherwise sealed during the test.
2. Postconstruction test: Total leakage shall be measured with a pressure differential of 0.1 inch w.g. (25 Pa) across the entire system, including the manufacturer's air handler enclosure. Registers shall be taped or otherwise sealed during the test.

Exceptions:

1. A duct air leakage test shall not be required where the ducts and air handlers are located entirely within the building thermal envelope.
2. *Duct testing is not mandatory for buildings complying by Section 405 of this code. Duct leakage testing is required for Section R405 compliance where credit is taken for leakage, and a duct air leakage Qn to the outside of less than 0.080 (where Qn = duct leakage to the outside in cfm per 100 square feet of conditioned floor area tested at 25 Pascals) is indicated in the compliance report for the proposed design.*

A written report of the results of the test shall be signed by the party conducting the test and provided to the code official.

☐ **R403.3.5 Building cavities (Mandatory).** Building framing cavities shall not be used as ducts or plenums.

☑ **R403.4 Mechanical system piping insulation (Mandatory).** Mechanical system piping capable of carrying fluids above 105°F (41°C) or below 55°F (13°C) shall be insulated to a minimum of R-3.

☑ **R403.4.1 Protection of piping insulation.** Piping insulation exposed to weather shall be protected from damage, including that caused by sunlight, moisture, equipment maintenance and wind, and shall provide shielding from solar radiation that can cause degradation of the material. Adhesive tape shall not be permitted.

☐ **R403.5.1 Heated water circulation and temperature maintenance systems (Mandatory).** If heated water circulation systems are installed, they shall be in accordance with Section R403.5.1.1. Heat trace temperature maintenance systems shall be in accordance with Section R403.5.1.2. Automatic controls, temperature sensors and pumps shall be accessible. Manual controls shall be readily accessible.

☐ **R403.5.1.1 Circulation systems.** Heated water circulation systems shall be provided with a circulation pump. The system return pipe shall be a dedicated return pipe or a cold water supply pipe. Gravity and thermosiphon circulation systems shall be prohibited. Controls for circulating hot water system pumps shall start the pump based on the identification of a demand for hot water within the occupancy. The controls shall automatically turn off the pump when the water in the circulation loop is at the desired temperature and when there is no demand for hot water.

☐ **R403.5.1.2 Heat trace systems.** Electric heat trace systems shall comply with IEEE 515.1 or UL 515. Controls for such systems shall automatically adjust the energy input to the heat tracing to maintain the desired water temperature in the piping in accordance with the times when heated water is used in the occupancy.

MANDATORY REQUIREMENTS - (Continued)

☐ **R403.5.5 Heat traps (Mandatory).** Storage water heaters not equipped with integral heat traps and having vertical pipe risers shall have heat traps installed on both the inlets and outlets. External heat traps shall consist of either a commercially available heat trap or a downward and upward bend of at least 3 ½ inches (89 mm) in the hot water distribution line and cold water line located as close as possible to the storage tank.

R403.5.6 Water heater efficiencies (Mandatory).

☑ **R403.5.6.1.1 Automatic controls.** Service water-heating systems shall be equipped with automatic temperature controls capable of adjustment from the lowest to the highest acceptable temperature settings for the intended use. The minimum temperature setting range shall be from 100°F to 140°F (38°C to 60°C).

☑ **R403.5.6.1.2 Shut down.** A separate switch or a clearly marked circuit breaker shall be provided to permit the power supplied to electric service systems to be turned off. A separate valve shall be provided to permit the energy supplied to the main burner(s) of combustion types of service water-heating systems to be turned off.

☑ **R403.5.6.2 Water-heating equipment.** Water-heating equipment installed in residential units shall meet the minimum efficiencies of Table C404.2 in Chapter 4 of the Florida Building Code, Energy Conservation, Commercial Provisions, for the type of equipment installed. Equipment used to provide heating functions as part of a combination system shall satisfy all stated requirements for the appropriate water-heating category. Solar water heaters shall meet the criteria of Section R403.5.6.2.1.

☐ **R403.5.6.2.1 Solar water-heating systems.** Solar systems for domestic hot water production are rated by the annual solar energy factor of the system. The solar energy factor of a system shall be determined from the Florida Solar Energy Center Directory of Certified Solar Systems. Solar collectors shall be tested in accordance with ISO Standard 9806, Test Methods for Solar Collectors, and SRCC Standard TM-1, Solar Domestic Hot Water System and Component Test Protocol. Collectors in installed solar water-heating systems should meet the following criteria:

1. Be installed with a tilt angle between 10 degrees and 40 degrees of the horizontal; and
2. Be installed at an orientation within 45 degrees of true south.

☑ **R403.6 Mechanical ventilation (Mandatory).** The building shall be provided with ventilation that meets the requirements of the Florida Building Code, Residential, or Florida Building Code, Mechanical, as applicable, or with other approved means of ventilation including: Natural, Infiltration or Mechanical means. Outdoor air intakes and exhausts shall have automatic or gravity dampers that close when the ventilation system is not operating.

☐ **R403.6.1 Whole-house mechanical ventilation system fan efficacy.** When installed to function as a whole-house mechanical ventilation system, fans shall meet the efficacy requirements of Table R403.6.1.

Exception: Where an air handler that is integral to tested and listed HVAC equipment is used to provide whole-house mechanical ventilation, the air handler shall be powered by an electronically commutated motor.

☑ **R403.6.2 Ventilation air.** Residential buildings designed to be operated at a positive indoor pressure or for mechanical ventilation shall meet the following criteria:

1. The design air change per hour minimums for residential buildings in ASHRAE 62.2, Ventilation for Acceptable Indoor Air Quality, shall be the maximum rates allowed for residential applications.
2. No ventilation or air-conditioning system make-up air shall be provided to conditioned space from attics, crawlspaces, attached enclosed garages or outdoor spaces adjacent to swimming pools or spas.
3. If ventilation air is drawn from enclosed space(s), then the walls of the space(s) from which air is drawn shall be insulated to a minimum of R-11 and the ceiling shall be insulated to a minimum of R-19, space permitting, or R-10 otherwise.

R403.7 Heating and cooling equipment.

☑ **R403.7.1 Equipment sizing (Mandatory).** Heating and cooling equipment shall be sized in accordance with ACCA Manual S based on the equipment loads calculated in accordance with ACCA Manual J or other approved heating and cooling calculation methodologies, based on building loads for the directional orientation of the building. The manufacturer and model number of the outdoor and indoor units (if split system) shall be submitted along with the sensible and total cooling capacities at the design conditions described in Section R302.1. This Code does not allow designer safety factors, provisions for future expansion or other factors that affect equipment sizing. System sizing calculations shall not include loads created by local intermittent mechanical ventilation such as standard kitchen and bathroom exhaust systems. New or replacement heating and cooling equipment shall have an efficiency rating equal to or greater than the minimum required by federal law for the geographic location where the equipment is installed.

TABLE R403.6.1
WHOLE-HOUSE MECHANICAL VENTILATION SYSTEM FAN EFFICACY

FAN LOCATION	AIRFLOW RATE MINIMUM (CFM)	MINIMUM EFFICACY [a] (CFM/WATT)	AIRFLOW RATE MAXIMUM (CFM)
HRV or ERV	Any	1.2 cfm/watt	Any
Range hoods	Any	2.8 cfm/watt	Any
In-line fan	Any	2.8 cfm/watt	Any
Bathroom, utility room	10	1.4 cfm/watt	<90
Bathroom, utility room	90	2.8 cfm/watt	Any

For SI: 1 cfm = 28.3 L/min. a. When tested in accordance with HVI Standard 916

MANDATORY REQUIREMENTS - (Continued)

☑ **R403.7.1.1 Cooling equipment capacity.** Cooling only equipment shall be selected so that its total capacity is not less than the calculated total load but not more than 1.15 times greater than the total load calculated according to the procedure selected in Section R403.7, or the closest available size provided by the manufacturer's product lines. The corresponding latent capacity of the equipment shall not be less than the calculated latent load.
The published value for AHRI total capacity is a nominal, rating-test value and shall not be used for equipment sizing. Manufacturer's expanded performance data shall be used to select cooling-only equipment. This selection shall be based on the outdoor design dry-bulb temperature for the load calculation (or entering water temperature for water-source equipment), the blower CFM provided by the expanded performance data, the design value for entering wet-bulb temperature and the design value for entering dry-bulb temperature.

Design values for entering wet-bulb and dry-bulb temperatures shall be for the indoor dry bulb and relative humidity used for the load calculation and shall be adjusted for return side gains if the return duct(s) is installed in an unconditioned space.

Exceptions:

1. Attached single- and multiple-family residential equipment sizing may be selected so that its cooling capacity is less than the calculated total sensible load but not less than 80 percent of that load.
2. When signed and sealed by a Florida-registered engineer, in attached single- and multiple-family units, the capacity of equipment may be sized in accordance with good design practice.

R403.7.1.2 Heating equipment capacity.

☐ **R403.7.1.2.1 Heat pumps.** Heat pump sizing shall be based on the cooling requirements as calculated according to Section R403.7.1.1, and the heat pump total cooling capacity shall not be more than 1.15 times greater than the design cooling load even if the design heating load is 1.15 times greater than the design cooling load.

☑ **R403.7.1.2.2 Electric resistance furnaces.** Electric resistance furnaces shall be sized within 4 kW of the design requirements calculated according to the procedure selected in Section R403.7.1.

☐ **R403.7.1.2.3 Fossil fuel heating equipment.** The capacity of fossil fuel heating equipment with natural draft atmospheric burners shall not be less than the design load calculated in accordance with Section R403.7.1.

☑ **R403.7.1.3 Extra capacity required for special occasions.** Residences requiring excess cooling or heating equipment capacity on an intermittent basis, such as anticipated additional loads caused by major entertainment events, shall have equipment sized or controlled to prevent continuous space cooling or heating within that space by one or more of the following options:

1. A separate cooling or heating system is utilized to provide cooling or heating to the major entertainment areas.
2. A variable capacity system sized for optimum performance during base load periods is utilized.

☐ **R403.8 Systems serving multiple dwelling units (Mandatory).** Systems serving multiple dwelling units shall comply with Sections C403 and C404 of the Florida Building Code, Energy Conservation—Commercial Provisions in lieu of Section R403.

☐ **R403.9 Snow melt and ice system controls (Mandatory)** Snow- and ice-melting systems, supplied through energy service to the building, shall include automatic controls capable of shutting off the system when the pavement temperature is above 50°F (10°C), and no precipitation is falling and an automatic or manual control that will allow shutoff when the outdoor temperature is above 40°F (4.8°C).

☐ **R403.10 Pools and permanent spa energy consumption (Mandatory).** The energy consumption of pools and permanent spas shall be in accordance with Sections R403.10.1 through R403.10.5.

☑ **R403.10.1 Heaters.** The electric power to heaters shall be controlled by a readily accessible on-off switch that is an integral part of the heater mounted on the exterior of the heater, or external to and within 3 feet (914 mm) of the heater. Operation of such switch shall not change the setting of the heater thermostat. Such switches shall be in addition to a circuit breaker for the power to the heater. Gas-fired heaters shall not be equipped with continuously burning ignition pilots.

☐ **R403.10.2 Time switches.** Time switches or other control methods that can automatically turn off and on according to a preset schedule shall be installed for heaters and pump motors. Heaters and pump motors that have built-in time switches shall be in compliance with this section.

Exceptions:

1. Where public health standards require 24-hour pump operation.
2. Pumps that operate solar- and waste-heat-recovery pool heating systems.
3. Where pumps are powered exclusively from on-site renewable generation.

☐ **R403.10.3 Covers.** Outdoor heated swimming pools and outdoor permanent spas shall be equipped with a vapor-retardant cover on or at the water surface or a liquid cover or other means proven to reduce heat loss.

Exception: Where more than 70 percent of the energy for heating, computed over an operation season, is from site-recovered energy, such as from a heat pump or solar energy source, covers or other vapor-retardant means shall not be required.

☐ **R403.10.4 Gas- and oil-fired pool and spa heaters.** All gas- and oil-fired pool and spa heaters shall have a minimum thermal efficiency of 82 percent for heaters manufactured on or after April 16, 2013, when tested in accordance with ANSI Z 21.56. Pool heaters fired by natural or LP gas shall not have continuously burning pilot lights.

☐ **R403.10.5 Heat pump pool heaters.** Heat pump pool heaters shall have a minimum COP of 4.0 when tested in accordance with AHRI 1160, Table 2, Standard Rating Conditions-Low Air Temperature. A test report from an independent laboratory is required to verify procedure compliance. Geothermal swimming pool heat pumps are not required to meet this standard.

☐ **R403.11 Portable spas (Mandatory).** The energy consumption of electric-powered portable spas shall be controlled by the requirements of APSP-14.

☐ **R403.13 Dehumidifiers (Mandatory** If installed, a dehumidifier shall conform to the following requirements:

1. The minimum rated efficiency of the dehumidifier shall be greater than 1.7 liters/ kWh if the total dehumidifier capacity for the house is less than 75 pints/day and greater than 2.38 liters/kWh if the total dehumidifier capacity for the house is greater than or equal to 75 pints/day.
2. The dehumidifier shall be controlled by a sensor that is installed in a location where it is exposed to mixed house air.
3. Any dehumidifier unit located in unconditioned space that treats air from conditioned space shall be insulated to a minimum of R-2.
4. Condensate disposal shall be in accordance with Section M1411.3.1 of the Florida Building Code, Residential.

☐ **R403.13.1 Ducted dehumidifiers.** Ducted dehumidifiers shall, in addition to conforming to the requirements of Section R403.13, conform to the following requirements:

1. If a ducted dehumidifier is configured with return and supply ducts both connected into the supply side of the cooling system, a backdraft damper shall be installed in the supply air duct between the dehumidifier inlet and outlet duct.
2. If a ducted dehumidifier is configured with only its supply duct connected into the supply side of the central heating and cooling system, a backdraft damper shall be installed in the dehumidifier supply duct between the dehumidifier and central supply duct.
3. A ducted dehumidifier shall not be ducted to or from a central ducted cooling system on the return duct side upstream from the central cooling evaporator coil.
4. Ductwork associated with a dehumidifier located in unconditioned space shall be insulated to a minimum of R-6.

SECTION R404

ELECTRICAL POWER AND LIGHTING SYSTEMS

☑ **R404.1 Lighting equipment (Mandatory).** Not less than 90 percent of the lamps in permanently installed luminaires shall have an efficacy of at least 45 lumens-per-watt or shall utilize lamps with an efficacy of not less than 65 lumens-per-watt.

R404.1.1 Lighting equipment (Mandatory). Fuel gas lighting systems shall not have continuously burning pilot lights.

AHRI CERTIFIED®
www.ahridirectory.org

Eligible for Federal Tax Credit

Certificate of Product Ratings

AHRI Certified Reference Number : 201295251 Date : 11-26-2021 Model Status : Active

Old AHRI Reference Number : 7943715

AHRI Type : RCU-A-CB (Split System: Air-Cooled Condensing Unit, Coil with Blower)

Outdoor Unit Brand Name : RHEEM

Outdoor Unit Model Number (Condenser or Single Package) : RA1660AJ1

Indoor Unit Model Number (Evaporator and/or Air Handler) : RH1V6024STAN

Region : All (AK, AL, AR, AZ, CA, CO, CT, DC, DE, FL, GA, HI, ID, IL, IA, IN, KS, KY, LA, MA, MD, ME, MI, MN, MO, MS, MT, NC, ND, NE, NH, NJ, NM, NV, NY, OH, OK, OR, PA, RI, SC, SD, TN, TX, UT, VA, VT, WA, WV, WI, WY, U.S. Territories)

Region Note : Central air conditioners manufactured prior to January 1, 2015 are eligible to be installed in all regions until June 30, 2016. Beginning July 1, 2016 central air conditioners can only be installed in region(s) for which they meet the regional efficiency requirement.

The manufacturer of this RHEEM product is responsible for the rating of this system combination.

Rated as follows in accordance with the latest edition of AHRI 210/240 with Addendum 1, Performance Rating of Unitary Air-Conditioning & Air-Source Heat Pump Equipment and subject to rating accuracy by AHRI-sponsored, independent, third party testing:

Cooling Capacity (A2) - Single or High Stage (95F), btuh : 57000

SEER : 16.00

EER (A2) - Single or High Stage (95F) : 13.00

†"Active" Model Status are those that an AHRI Certification Program Participant is currently producing AND selling or offering for sale; OR new models that are being marketed but are not yet being produced."Production Stopped" Model Status are those that an AHRI Certification Program Participant is no longer producing BUT is still selling or offering for sale.
Ratings that are accompanied by WAS indicate an involuntary re-rate. The new published rating is shown along with the previous (i.e. WAS) rating.

DISCLAIMER
AHRI does not endorse the product(s) listed on this Certificate and makes no representations, warranties or guarantees as to, and assumes no responsibility for, the product(s) listed on this Certificate. AHRI expressly disclaims all liability for damages of any kind arising out of the use or performance of the product(s), or the unauthorized alteration of data listed on this Certificate. Certified ratings are valid only for models and configurations listed in the directory at www.ahridirectory.org.

TERMS AND CONDITIONS
This Certificate and its contents are proprietary products of AHRI. This Certificate shall only be used for individual, personal and confidential reference purposes. The contents of this Certificate may not, in whole or in part, be reproduced; copied; disseminated; entered into a computer database; or otherwise utilized, in any form or manner or by any means, except for the user's individual, personal and confidential reference.

CERTIFICATE VERIFICATION
The information for the model cited on this certificate can be verified at www.ahridirectory.org, click on "Verify Certificate" link and enter the AHRI Certified Reference Number and the date on which the certificate was issued, which is listed above, and the Certificate No., which is listed at bottom right.

AHRI
AIR-CONDITIONING, HEATING, & REFRIGERATION INSTITUTE
we make life better™

©2021 Air-Conditioning, Heating, and Refrigeration Institute

CERTIFICATE NO.: 132824067030211758

TABLE 3

NVBH 24 BUTTERFLY HANGER

SIZE	PRODUCT CODE	GAUGE	FASTENER SCHEDULE		ALLOWABLE LOADS (lbs.)
			HEADER 8d	JOIST 8d	DOWNWARD GRAVITY LOADS
2x4	NVBH24	18	12	6	1113

Notes:

1. Use all specified fasteners in schedule to achieve values indicated.
2. Values are based on 1½" header and Joist thickness.
3. See General Notes, Sheet 1.

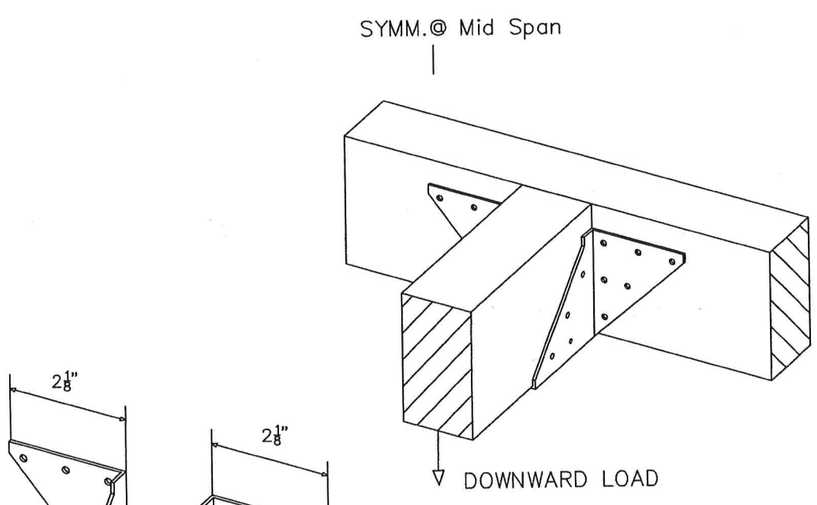

TABLE 4

NVUH 26 JOIST HANGER

SIZE	PRODUCT CODE	GAUGE	FASTENER SCHEDULE		ALLOWABLE LOADS (lbs.)	
			HEADER 16d	JOIST 10d x 1½"	DOWNWARD GRAVITY LOADS	WIND UPLIFT LOAD
2x6	NVUH26	14	20	10	2233	1213

Notes:

1. Use all specified fasteners in schedule to achieve values indicated.
2. Values are based on 3" header thickness and 1½" Joist thickness.
3. See General Notes, Sheet 1.

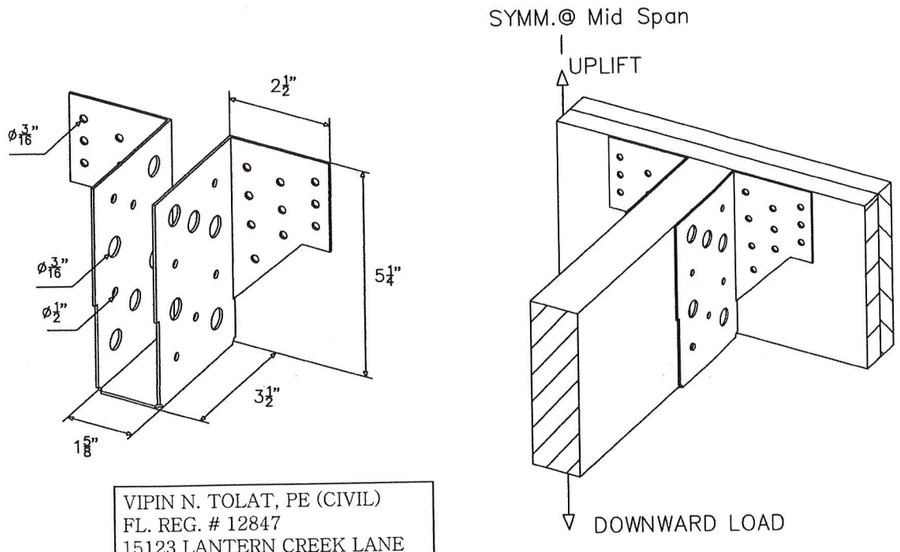

PRODUCT REVISED
as complying with the Florida Building Code
NOA-No. 20-0519.03
Expiration Date 07/30/2025
By
Miami-Dade Product Control

VIPIN N. TOLAT, PE (CIVIL)
FL. REG. # 12847
15123 LANTERN CREEK LANE
HOUSTON, TX 77068

5/7/2020

Nu-Vue Industries, Inc.
1053-1059 East 29 Street
Hialeah, Florida 33013
PHONE: (305) 694-0397
FAX: (305) 694-0398

NVBH 24 AND NVUH 26 HANGERS

DWG #:	Sheet:	Date:	
NU-2	2 of 4	May 5, 2020	

OFFICE COPY
CITY OF MIAMI SPRINGS

CITY OF MIAMI SPRINGS
BUILDING DEPARTMENT
DEC 10 2021
RECEIVED

TABLE 1

Truss Anchors NVTA and Riveted Truss Anchors with Seat NVTAS

H Length (in)	Product Code		Gauge seat	Gauge strap
16	NVTA–16	NVTAS 212	20	14
18	NVTA–18	NVTAS 214	20	14
20	NVTA–20	NVTAS 216	20	14
22	NVTA–22	NVTAS 218	20	14
24	NVTA–24	NVTAS 220	20	14
26	NVTA–26	NVTAS 222	20	14
28	NVTA–28	NVTAS 224	20	14
30	NVTA–30	NVTAS 226	20	14
36	NVTA–36	NVTAS 232	20	14
48	NVTA–48	NVTAS 244	20	14

No. of Fasteners each strap 10d	Maximum Allowable Load (lbs)			
	Uplift Single Strap	Uplift Double Straps	L1 Single & Double Straps	L2 Single & Double Straps
5	757	1514	250	500
6	805	1610	250	500
7	854	1708	250	500
8	902	*1804	250	500
9	951	*1902	250	500
10	999	*1998	250	500
11	1048	*2096	250	500
12	1096	*2192	250	500
13	1145	*2290	250	500
14	1193	*2290	250	500

*Note: For 8 or more nails per strap, use double truss for double straps.

PRODUCT REVISED
as complying with the Florida Building Code
NOA-No. 20-0519.03
Expiration Date 07/30/2025
By
Miami-Dade Product Control

TABLE 2

Truss Anchors NVTA and Riveted Truss Anchors with Seat NVTAS

H Length (in)	Product Code		Gauge seat	Gauge strap
16	NVTA–16	NVTAS 212	20	14
18	NVTA–18	NVTAS 214	20	14
20	NVTA–20	NVTAS 216	20	14
22	NVTA–22	NVTAS 218	20	14
24	NVTA–24	NVTAS 220	20	14
26	NVTA–26	NVTAS 222	20	14
28	NVTA–28	NVTAS 224	20	14
30	NVTA–30	NVTAS 226	20	14
36	NVTA–36	NVTAS 232	20	14
48	NVTA–48	NVTAS 244	20	14

No. of Fasteners each strap 10d x 1.5"	Maximum Allowable Load (lbs)			
	Uplift Single Strap	Uplift Double Straps	L1 Single & Double Straps	L2 Single & Double Straps
5	1032	2236	250	500
6	1127	2254	385	565
7	1136	2272	520	630
8	1144	*2288	520	630
9	1153	*2306	520	630
10	1161	*2322	520	630
11	1170	*2340	520	630
12	1178	*2356	520	630
13	1187	*2374	520	630

*Note: For 8 or more nails per strap, use double truss for double straps.

General Notes:

1. Steel shall conform to ASTM A653, SS grade 33, min. yield 33 ksi, min. tensile strength 45 ksi and min. galvanized coating of G 60 per ASTM A653.

2. Allowable loads and fasteners are based on NDS 2015.

3. Design loads are for S. Pine, specific gravity 0.55. Design loads for other species shall be adjusted per NDS 2015.

4. Allowable uplift loads have been adjusted for load duration factor CD of 1.6. Allowable gravity loads have been adjusted for CD values of 1.0, per NDS 2015. Design loads do not include 33% increase for steel and concrete.

5. Concrete in Tie beams shall be min. of 2500 psi. Concrete Masonry, Grout and mortar in concrete masonry shall be min. of 1500 psi. Concrete masonry shall comply with ASTM C90.

6. Combined load of Uplift, L1 and L2 shall satisfy the following equation.

$$\frac{\text{Actual Uplift}}{\text{Allowable Uplift}} + \frac{\text{Actual L1}}{\text{Allowable L1}} + \frac{\text{Actual L2}}{\text{Allowable L2}} <= 1.0$$

7. Allowable loads are based on 1½" thick wood members unless otherwise noted.

8. All designs Conform to FBC 2017. ASTM D1761 and ASTM D7147.

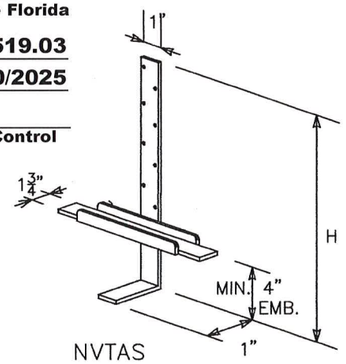

NVTAS

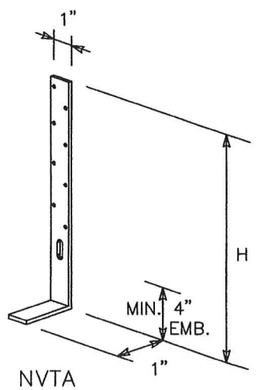

NVTA

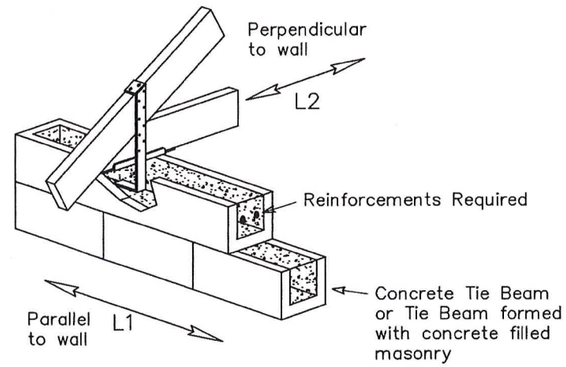

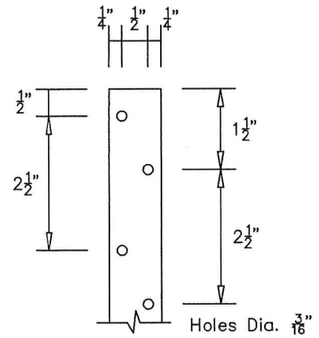

NVTA, NVTAS

VIPIN N. TOLAT, PE (CIVIL)
FL. REG. # 12847
15123 LANTERN CREEK LANE
HOUSTON, TX 77068

5/7/2020

Nu-Vue Industries, Inc.
1053–1059 East 29 Street
Hialeah, Florida 33013
PHONE: (305) 694–0397
FAX: (305) 694–0398

NVTA AND NVTAS TRUSS ANCHORS

DWG #:	Sheet:	Date:	
NU-2	1 of 4	May 5, 2020	

CITY OF MIAMI SPRINGS
BUILDING DEPARTMENT
OFFICE COPY
CITY OF MIAMI SPRINGS
DEC 10 2021
RECEIVED

18 Gauge Angle Clips.

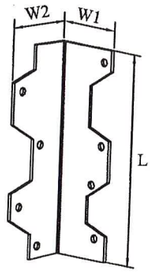

AB-7

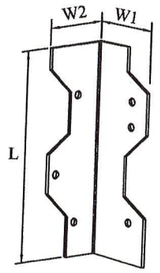

AB-5

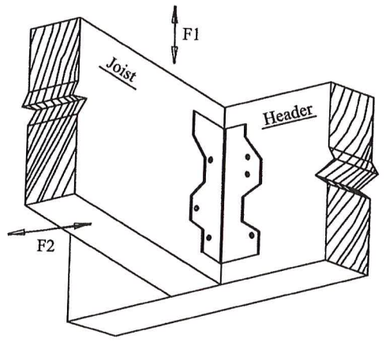

Typical Installation

Product Code	Dimensions (inches)			Fastener Schedule		Alowable Loads (lbs)	
	W1	W2	L	Header	Joist	F1	F2
AB5	1½	2 5/16	5	3-10dx1½"	3-10dx1½"	511	595
AB7	1½	2 5/16	7	4-10dx1½"	4-10dx1½"	582	794

Notes: Nail wider angle leg to Joist and Shorter leg to Header.

GENERAL NOTES:

1. Steel shall conform to ASTM A653, structural grade 33 (Min. yield 33 ksi) and a minimum galvanized coating of G 60 per ASTM A653.

2. Allowable loads are based on National Desing specifications (NDS) for wood construction, 2015/2018 and FBC 2017/2020.

3. Design loads are for Southern Pine species with a specific gravity of 0.55. Allowable loads for other species shall be adjusted accordingly.

4. Common wire nail values are based on NDS 2015/2018, G=0.55 and have been reduced for Penetration Depth factor P/10D.

5. Allowable loads for wind uplift have already been increased by a duration factor of 60% for anchor nail. Load values shown are without 33% steel stress increase.

6. Allowable loads for more than a single connection cannot be added together. A design load which is divided into components in the direction given must be evaluated as follows:

$$\frac{\text{Actual Uplift}}{\text{Allowable Uplift}} + \frac{\text{Actual L1}}{\text{Allowable L1}} + \frac{\text{Actual L2}}{\text{Allowable L2}} <= 1.0$$

7. Allowable loads are based on 1½" thick wood members unless otherwise noted.

8. All tie beams and grouted concrete masonry shall comply with FBC 2017/FBC 2020. Concrete for tie beams and grout and mortar for concrete masonry shall be a minimum of 2500 psi. Concrete masonry shall comply with ASTM C90.

9. All tests have been conducted in accordance with ASTM D-1761 and ASTM D-7147.

PRODUCT REVISED
as complying with the Florida Building Code
NOA-No. 20-0901.05
Expiration Date 05/22/2023
By
Miami-Dade Product Control

VIPIN N. TOLAT, PE (CIVIL)
FL. REG. # 12847
15123 LANTERN CREEK LANE
HOUSTON, TX 77068

8/21/2020

Nu-Vue Industries, Inc.
1053-1059 East 29 Street
Hialeah, Florida 33013
(305) 694-0397
Fax: (305) 694-0398

TRUSS AND TOP PLATE ANCHORS

DWG #:	Sheet:	Date:	Revisions:
NU-1	1 of 4	August 18, 2020	

Deep Seat Truss Anchor.. They are designed to resist lateral and uplift forces. The strap is made of 14 gauge steel and the seats of 20 gauge steel.

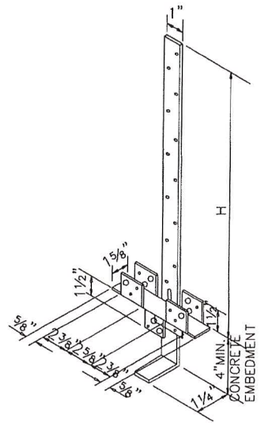

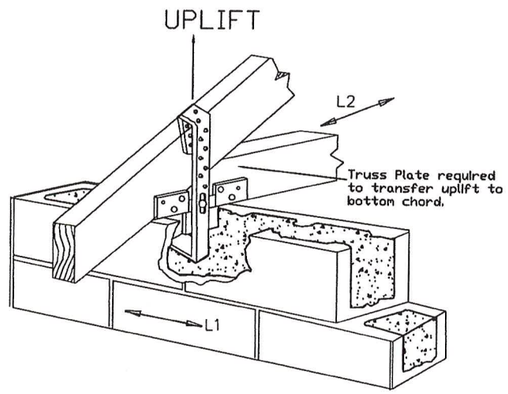

Assembly Product Code	Dimension H (inches)
NVSTA12	12
NVSTA16	16
NVSTA20	20
NVSTA22	22
NVSTA24	24

Total No. of Fasteners in Strap 10d x 1½"	Total No. of Fasteners in 20 GA. Seat 10d x 1½"	Allowable Loads (lbs)		
		Uplift [6]	L1 [6]	L2 [6]
5	6	1046	700	1049
6	6	1141	760	1144
7	6	1236	823	1239
8	6	1331	887	1335
9	6	1426	950	1430

Holden Double Strap Riveted Truss Anchor.. They are designed of 14 gauge steel plates to resist lateral and uplift forces. The seats are made of 20 gauge steel.

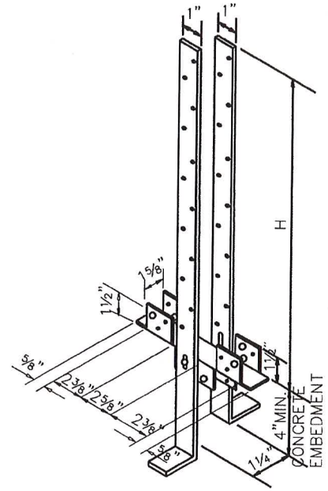

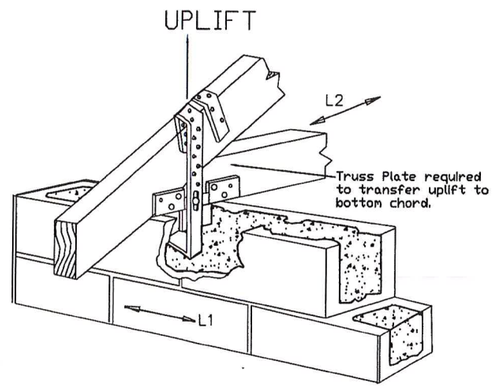

Assembly Product Code	Dimension H (inches)
NVHTA12	12
NVHTA16	16
NVHTA20	20
NVHTA22	22
NVHTA24	24

Total No. of Fasteners in two Straps 10d x 1½"	Total No. of Fasteners in 20 GA. Seat 10d x 1½"	Allowable Loads (lbs)			
		Uplift [6]	Uplift [5]	L1 [6]	L2 [6]
10	6	1506	1766	1050	1450
12	6	1695	1987	1181	1631
14	6	1883	2208	1312	1812
16	6	2071	2429	1444	1994
18	6	2259	2649	1575	2175

Notes:
1. Nails are necessary in straps and seat to achieve, desing loads.
2. See note 6, sheet 1 for combined loading.
3. Nails through chords shall not force the truss plates.
4. For general notes, see sheet 1.
5. For higher uplift loads, concrete shall be 3000 psi.
6. Based on min. 2500 psi concrete.

PRODUCT REVISED
as complying with the Florida Building Code
NOA–No. 20-0901.05
Expiration Date 05/22/2023
By
Miami–Dade Product Control

VIPIN N. TOLAT, PE (CIVIL)
FL. REG. # 12847
15123 LANTERN CREEK LANE
HOUSTON, TX 77068

8/21/2020

Nu-Vue Industries, Inc.
1053-1059 East 29 Street
Hialeah, Florida 33013
(305) 694-0397
Fax: (305) 694-0398

TRUSS AND TOP PLATE ANCHORS

DWG #:	Sheet:	Date:	Revisions:
NU-1	2 of 4	August 18, 2020	

12 Gauge NVTHJ Truss Hip & Jack Hanger

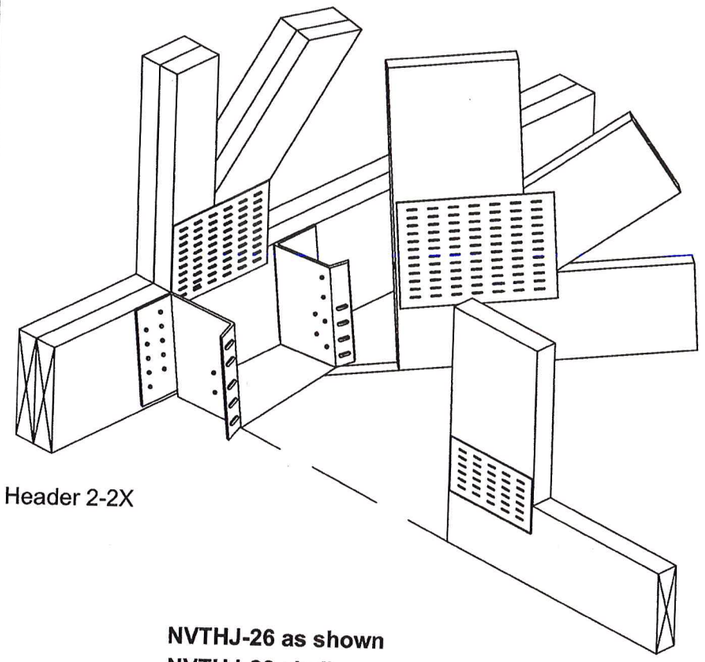

Header 2-2X

NVTHJ-26 as shown
NVTHJ-28 similar

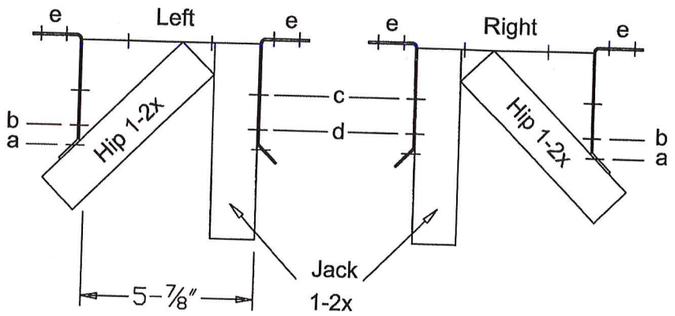

U.S. Patent No. 4,964,253

Product Code	Allowable Loads (lbs) S. Pine	Nail Schedule						
	Uplift Loads	Header Nails 16d (e)	Hip Nail 10d			Jack Nail 10d		
			a	b	total	c	d	total
NVTHJ26	1478	16	4	3	7	2	3	5
NVTHJ28	1931	20	5	4	9	2	3	5

Note: For 1-2x members 10dx1½" nails can be used

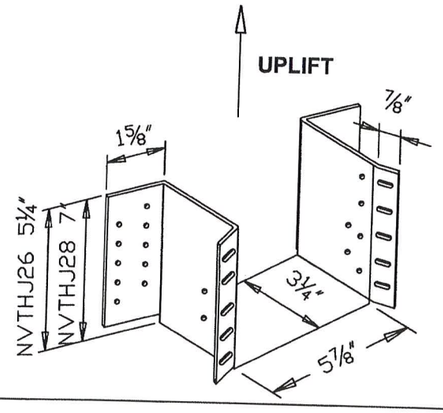

NVTHJ-28 as shown
NVTHJ-26 similar

PRODUCT REVISED
as complying with the Florida Building Code
NOA-No. 20-0901.05
Expiration Date 05/22/2023
By
Miami-Dade Product Control

20G Stud Plate Ties

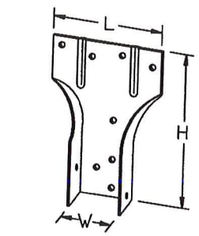

IKE-1
(ISOMETRIC)

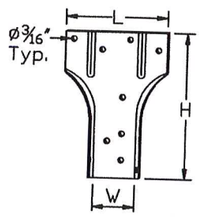

IKE-1

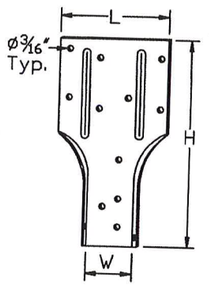

IKE-2

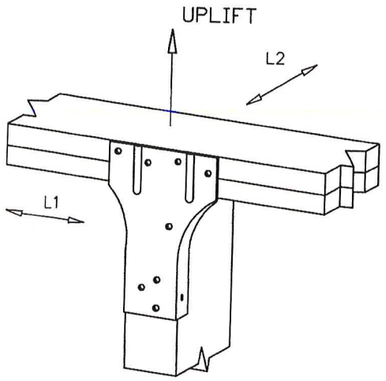

TYPICAL IKE1
INSTALATION

Product Code	Dimensions (inches)			Fasteners		Allowable Loads (lbs)		
	W	H	L	Stud	Plate	Uplift	L1	L2
IKE 1	1½	5	3½	6-10d	4-10d	787	337	337
IKE 2	1½	6⅝	3½	6-10d	7-10d	932	451	318

VIPIN N. TOLAT, PE (CIVIL)
FL. REG. # 12847
15123 LANTERN CREEK LANE
HOUSTON, TX 77068

8/21/2020

Nu-Vue Industries, Inc.
1053-1059 East 29 Street
Hialeah, Florida 33013
(305) 694-0397
Fax: (305) 694-0398

TRUSS AND TOP PLATE ANCHORS

DWG #:	Sheet:	Date:	Revisions:
NU-1	3 of 4	August 18, 2020	

18 Gauge NVTT Sanibel Truss Strap

Product Code	Dimensions (inches)				Fasteners Schedule			Allowable Loads (lbs)	
	W	B	H	L	Truss	Top Plates	Hollow Concrete Masonry	Uplift	L1
NVTT-1	1 9/16	1 3/4	14	13	2-10dx1½"	6-10d	-----	968	543
NVTT-2	1 9/16	1 3/4	14	13	2-10dx1½"	-----	6-¼"Øx1 ½" Tapcons	1584	465

1. 1-10dx1½" nail is placed on each side of the Truss and 3-10dnails in each leg are placed in two top plates.

2. 3-¼"dia. x 1½" long, 1¼" embedment tapcons are placed in each leg and into the hollow concrete masonry. Maintain 2½" edge distance from top of the block and spacing of 3" between the tapcons.

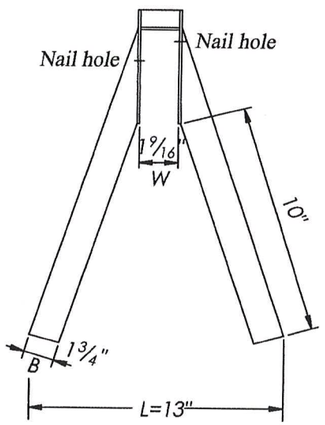

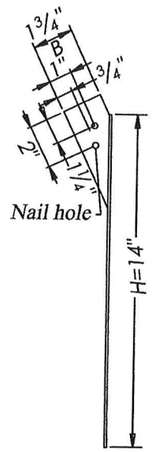

NVTT 1 and 2

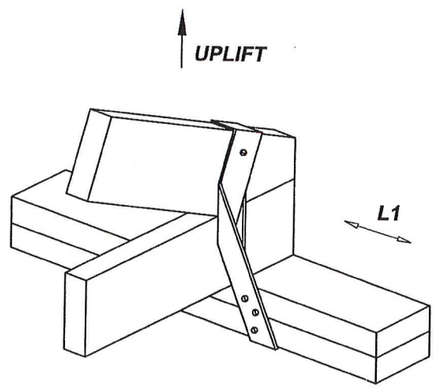

NVTT-1 As Shown
NVTT-2 Similar except concrete masonry with tapcon anchors instead of Wood Plates and nails.

18 Gauge NVHC 37 5WAY Grip Clip (520)

Product Code	Description	Nail Schedule		Allowable Design Loads (lbs)		
		Header or Plate	Joist or Stud	Uplift	L1	L2
NVHC 37	5 Way Clip	16-8d or 16-10d	12-8d or 12-10d	702	560	637

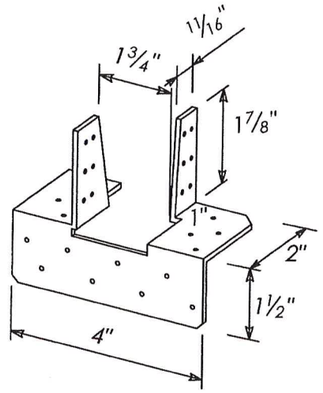

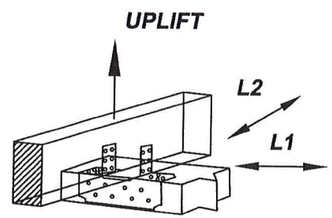

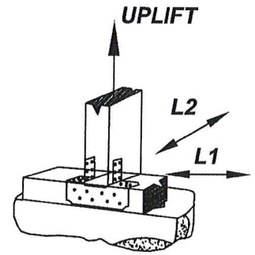

PRODUCT REVISED
as complying with the Florida Building Code
NOA-No. 20-0901.05
Expiration Date 05/22/2023
By
Miami-Dade Product Control

VIPIN N. TOLAT, PE (CIVIL)
FL. REG. # 12847
15123 LANTERN CREEK LANE
HOUSTON, TX 77068

8/21/2020

Nu-Vue Industries, Inc.
1053-1059 East 29 Street
Hialeah, Florida 33013
(305) 694-0397
Fax: (305) 694-0398

TRUSS AND TOP PLATE ANCHORS

DWG #:	Sheet:	Date:	Revisions:
NU-1	4 of 4	August 18, 2020	

TABLE 5

NVRT Flat and Twisted Rafter Ties

Length (in)	Product Code	Gauge
12	NVRT–12	14
16	NVRT–16	14
18	NVRT–18	14
20	NVRT–20	14
22	NVRT–22	14
24	NVRT–24	14
30	NVRT–30	14
36	NVRT–36	14
48	NVRT–48	14

16d Fasteners		Maximum Uplift Load (lbs)	
TOTAL	In each member*	Flat Ties	Twisted Ties
8	4	725	724
10	5	861	860
12	6	998	996
14	7	1135	1132

Notes:

1. Specify "F" for Flat and "T" for Twisted when ordering.
2. Fastener values are based on a minimum $1\frac{1}{2}$" thick wood members.
3. * Indicates no. of nails in each connected wood member.
4. See General Notes, sheet 1.

PRODUCT REVISED
as complying with the Florida Building Code
NOA–No. 20-0519.03
Expiration Date 07/30/2025
By
Miami–Dade Product Control

TABLE 6

NVRT Twisted Rafter Ties to Concrete Tie Beams or Concrete Filled Masonry

Length (in)	Product Code	Gauge
12	NVRT–12	14
16	NVRT–16	14
18	NVRT–18	14
20	NVRT–20	14
22	NVRT–22	14
24	NVRT–24	14
30	NVRT–30	14
36	NVRT–36	14
48	NVRT–48	14

No. of 16d nails to Wood Framing	No. of $\frac{1}{4}$" diameter Tapcons to Concrete	Maximum Uplift Load (lbs)
4	6	722
5	7	856
6	8	991
7	9	1125

Notes:

1. ITW tapcons shall be embedded a minimum of $1\frac{1}{4}$" into concrete tiebeam or tiebeam formed with concrete filled masonry. ITW tapcons shall have a min. edge distance of $2\frac{1}{2}$" and minimum spacing of $1\frac{1}{2}$" as shown.
2. See General Notes, sheet 1.
3. All tapcons must be in the same row spaced at $1\frac{1}{2}$" on centers. Do not use holes in the opposite row. Strap must be long enough to accommodate required tapcons.

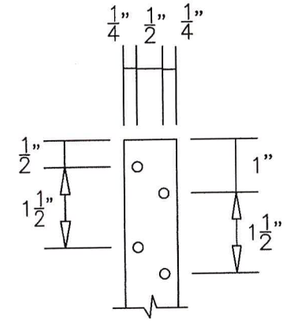

NVRT Anchor
Holes dia. $\frac{3}{16}$"

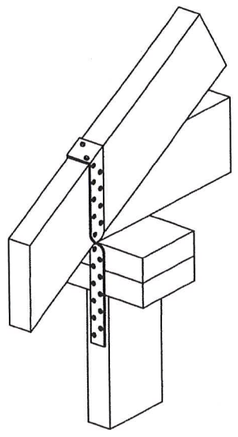

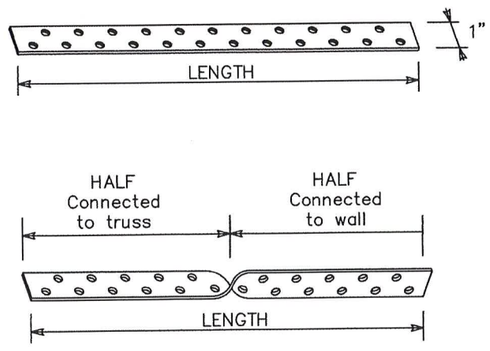

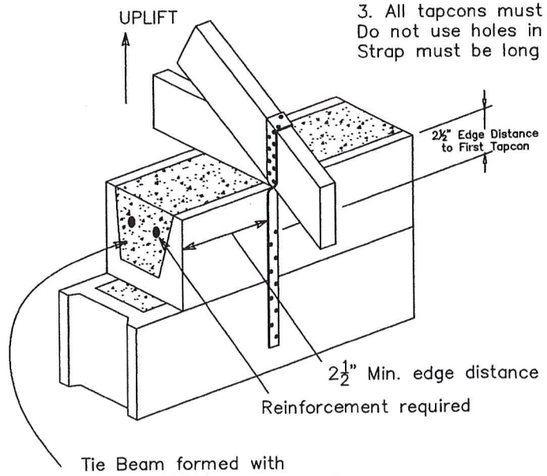

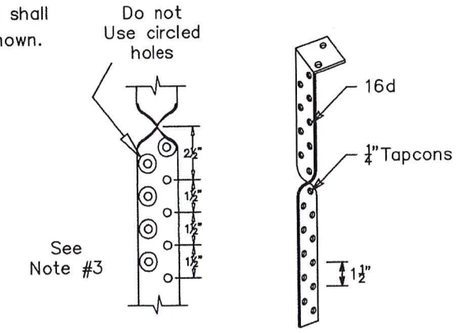

VIPIN N. TOLAT, PE (CIVIL)
FL. REG. # 12847
15123 LANTERN CREEK LANE
HOUSTON, TX 77068

5/7/2020

Nu-Vue Industries, Inc.
1053–1059 East 29 Street
Hialeah, Florida 33013
PHONE: (305) 694–0397
FAX: (305) 694–0398

NVRT FLAT AND TWISTED RAFTER TIES

DWG #:	Sheet:	Date:	
NU-2	3 of 4	May 5, 2020	

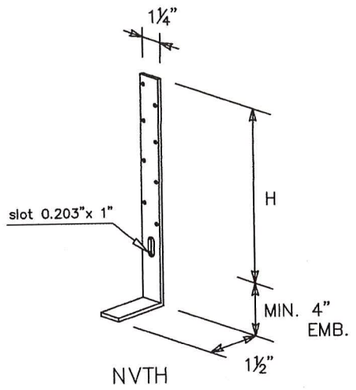

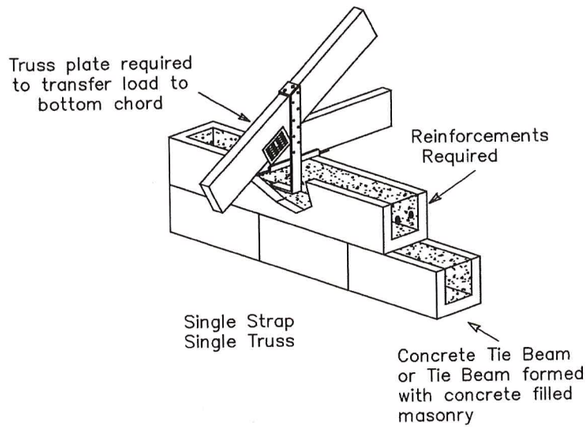

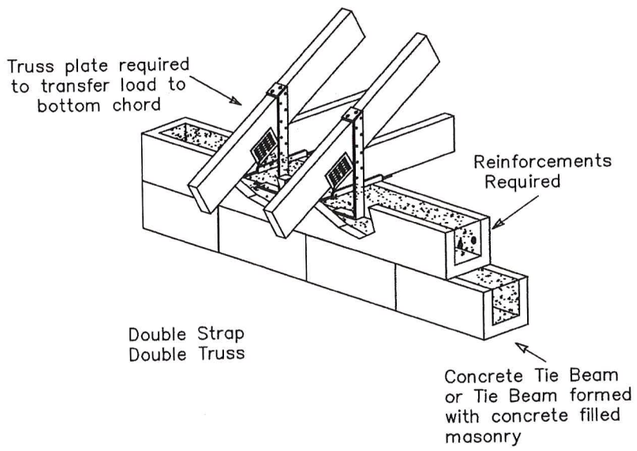

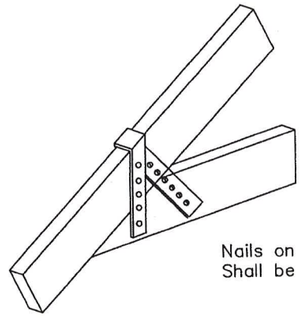

For General Notes, see sheet 1

TABLE 7

Truss Anchors NVTH

H Length (in)	Product Code	Gauge seat	Gauge strap
12	NVTH–16	18	14
14	NVTH–18	18	14
16	NVTH–20	18	14
18	NVTH–22	18	14
20	NVTH–24	18	14
22	NVTH–26	18	14
24	NVTH–28	18	14
26	NVTH–30	18	14
32	NVTH–36	18	14
44	NVTH–48	18	14

No. of Fasteners in each Strap 10d x 1.5"	Maximum Uplift Loads (lbs)	
	Single Strap on Single Truss	Double Straps on Double Truss
5	1032	2064
6	1222	2444
7	1275	2550
8	1329	2658
9	1383	2766
10	1437	2874
11	1490	2980
12	1544	3088
13	1598	3196

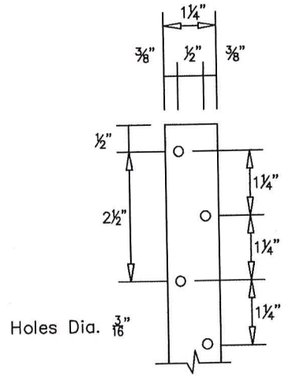

PRODUCT REVISED
as complying with the Florida Building Code
NOA-No. 20-0519.03
Expiration Date 07/30/2025
By
Miami-Dade Product Control

VIPIN N. TOLAT, PE (CIVIL)
FL. REG. # 12847
15123 LANTERN CREEK LANE
HOUSTON, TX 77068

5/7/2020

Nu–Vue Industries, Inc.
1053–1059 East 29 Street
Hialeah, Florida 33013
Phone: (305) 694–0397
Fax: (305) 694–0398

NVTH ANCHORS

DWG #:	Sheet:	Date:	Revisions:
NU–2	4 of 4	May 5, 2020	

RHEEM SALES COMPANY, INC.

WIND LOAD CERTIFICATION OF MECHANICAL UNIT CABINETRY AND STEEL/ALUMINUM TIE-DOWN CLIPS: AT GRADE MOUNTED APPLICATIONS

OFFICE COPY
CITY OF MIAMI SPRINGS
BUILDING DEPARTMENT
DEC 10 2021
RECEIVED
OCT 22 2020

FRANK BENNARDO, PE
PE# 0046549 GA# 9885
LICENSE
No 46549
STATE OF

DIGITAL SEAL NOTICE: IF THIS DOCUMENT IS DIGITALLY SIGNED, THIS SHEET IS PART OF A DIGITALLY SIGNED SET. IT SHALL REMAIN IN DIGITAL FORMAT, SHALL BE VERIFIED BY ELECTRONIC MEANS, & PRINTED COPIES OF THIS DOCUMENT ARE NOT CONSIDERED SIGNED AND SEALED.
PRINTED DOCUMENT NOTICE: IF THIS DOCUMENT IS PRINTED & DOESN'T CONTAIN AN ENGINEER'S ORIGINAL SIGNATURE & SEAL, THIS DOCUMENT IS VOID & NOT VALID FOR USE. PHOTOCOPIES ARE NOT PERMITTED FOR USE.

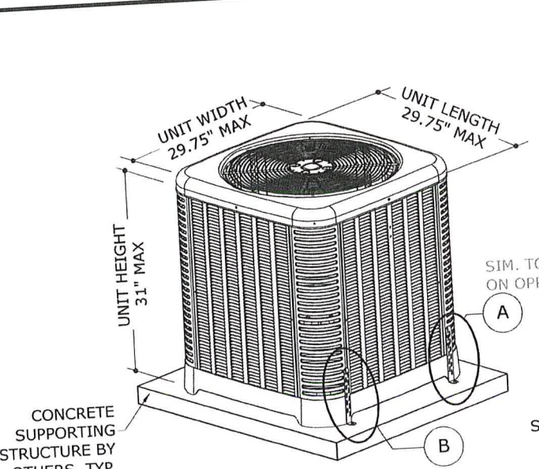

1/1 MECHANICAL UNIT — FRONT ISOMETRIC — N.T.S.

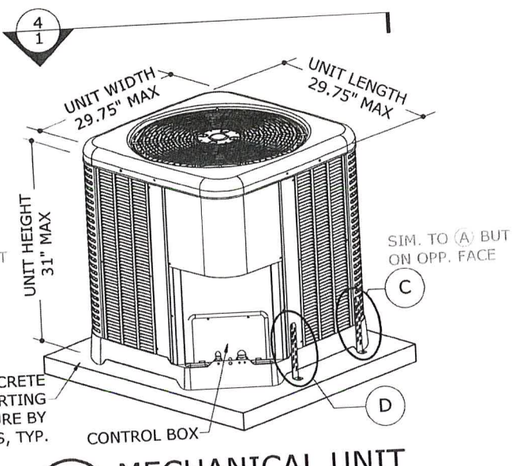

2/1 MECHANICAL UNIT — BACK ISOMETRIC — N.T.S.

THESE ISOMETRICS ARE INTENDED FOR DIAGRAMMATICAL PURPOSES ONLY; ALTERNATE RHEEM UNITS MAY VARY IN APPEARANCE

PRODUCT REVISED
as complying with the Florida Building Code
NOA–No. 20-1102.09
Expiration Date 02/25/2026
By _____
Miami–Dade Product Control

TIE-DOWN BRACKET

MIAMI TECH CLIP: 14GA (0.07") ASTM A653 Fu=90 KSI STEEL (CUTD8) OR 0.080" 5052-H32 ALUMINUM (CUTDA8), MIAMI TECH KIT # RRCUTDSMK OR RRCUTDASMK

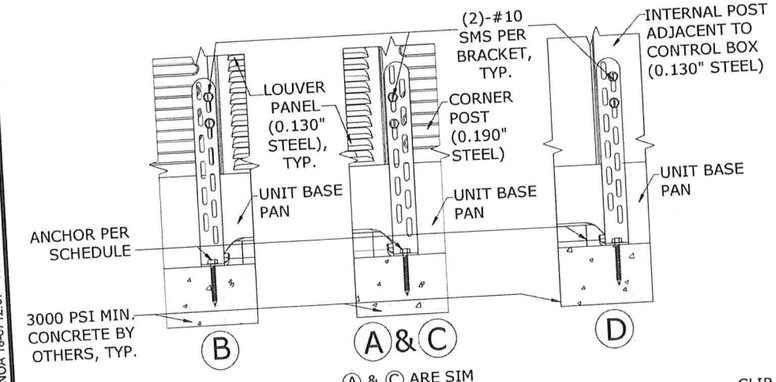

3/1 TIE-DOWN BRACKETS — ELEVATION — N.T.S.

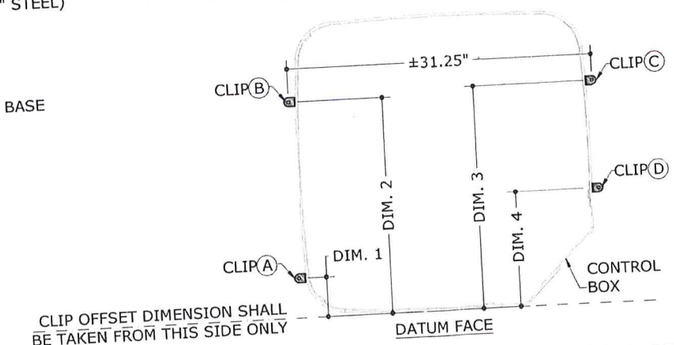

4/1 TIE-DOWN BRACKET LAYOUT — PLAN — N.T.S.

APPROVED DESIGN CRITERIA:

ASCE 7 Vult=175 MPH (Vasd-136 MPH), EXPOSURE "D" AT GRADE INSTALLATION ONLY

DESIGN NOTES:

THIS SYSTEM HAS BEEN DESIGNED IN ACCORDANCE WITH ASCE 7 AND THE FLORIDA BUILDING CODE SEVENTH EDITION (2020) FOR USE WITHIN AND OUTSIDE THE HIGH VELOCITY HURRICANE ZONE. THE DESIGN CRITERIA CONSIDERS ASCE 7 SECTION 29 FOR "OTHER STRUCTURES - SOLID FREESTANDING WALLS" INSTALLATIONS AT GRADE. ALL DESIGN VARIABLES ARE IN ACCORDANCE WITH ASCE 7 CHAPTERS 26 & 29.

GENERAL NOTES:

1. THIS SYSTEM HAS BEEN DESIGNED AND SHALL BE FABRICATED IN ACCORDANCE WITH THE REQUIREMENTS OF THE FLORIDA BUILDING CODE SEVENTH EDITION (2020) & ASCE 7. THIS SYSTEM MAY BE USED WITHIN AND OUTSIDE THE HIGH VELOCITY HURRICANE ZONE. THIS DESIGN IS NOT INTENDED TO CERTIFY IMPACT RESISTANCE OF THE MECHANICAL UNIT CABINETRY.
2. NO 33-1/3% INCREASE IN ALLOWABLE STRESS HAS BEEN USED IN THE DESIGN OF THIS SYSTEM.
3. DESIGN & CERTIFICATION OF THE UNIT CABINETRY IS APPROVED THROUGH TEST REPORT#0323.01-15 BY AMERICAN TEST LAB OF SOUTH FLORIDA.
4. ALL DIMENSIONS AND THE MINIMUM WEIGHT (120 LB MINIMUM) OF MECHANICAL UNIT SHALL CONFORM TO LIMITATIONS STATED HEREIN. ALL MECHANICAL SPECIFICATIONS (CLEAR SPACE, TONNAGE, ETC.) SHALL BE AS PER MANUFACTURER RECOMMENDATIONS AND ARE THE EXPRESS RESPONSIBILITY OF THE CONTRACTOR.
5. TAPCONS REFERRED TO HEREIN SHALL BE ITW BUILDEX BRAND, ASTM F593 410 STAINLESS STEEL OR EQUIVALENT ONLY, INSTALLED TO 3000 PSI MIN CONCRETE. SEE ANCHOR SCHEDULE FOR ANCHOR REQUIREMENTS. ALL SHEET METAL SCREWS USED TO FASTEN BRACKETS TO MECHANICAL UNITS SHALL BE #10 (14 MIN THREADS PER INCH) ASTM F593 410 STAINLESS STEEL OR EQUIVALENT ONLY. PROVIDE (5) PITCHES MINIMUM PAST THE THREAD PLANE FOR SHEET METAL SCREWS. ALL FASTENERS SHALL HAVE APPROPRIATE CORROSION PROTECTION TO PREVENT ELECTROLYSIS.
6. ALL CONCRETE SPECIFIED HEREIN IS NOT PART OF THIS CERTIFICATION. AS A MINIMUM, ALL CONCRETE SHALL BE STRUCTURAL CONCRETE 4" MIN. THICK AND SHALL HAVE MINIMUM COMPRESSIVE STRENGTH OF 3000 PSI, UNLESS NOTED OTHERWISE.
7. THE CONTRACTOR IS RESPONSIBLE TO INSULATE ALL MEMBERS FROM DISSIMILAR MATERIALS TO PREVENT ELECTROLYSIS.
8. ELECTRICAL GROUND, WHEN REQUIRED, TO BE DESIGNED & INSTALLED BY OTHERS.
9. THE ADEQUACY OF ANY EXISTING STRUCTURE TO WITHSTAND SUPERIMPOSED LOADS SHALL BE VERIFIED BY THE ONSITE DESIGN PROFESSIONAL AND IS NOT INCLUDED IN THIS CERTIFICATION.EXCEPT AS EXPRESSLY PROVIDED HEREIN, NO ADDITIONAL CERTIFICATIONS OR AFFIRMATIONS ARE INTENDED.
10. THE SYSTEM DETAILED HEREIN IS GENERIC AND DOES NOT PROVIDE INFORMATION FOR A SPECIFIC SITE. FOR SITE CONDITIONS DIFFERENT FROM THE CONDITIONS DETAILED HEREIN, A LICENSED ENGINEER OR REGISTERED ARCHITECT SHALL PREPARE SITE SPECIFIC DOCUMENTS FOR USE IN CONJUNCTION WITH THIS DOCUMENT.
11. WATER-TIGHTNESS OF EXISTING HOST SUBSTRATE SHALL BE THE FULL RESPONSIBILITY OF THE INSTALLING CONTRACTOR. CONTRACTOR SHALL ENSURE THAT ANY REMOVED OR ALTERED WATERPROOFING MEMBRANE IS RESTORED AFTER FABRICATION AND INSTALLATION OF STRUCTURE PROPOSED HEREIN. THIS ENGINEER SHALL NOT BE RESPONSIBLE FOR ANY WATERPROOFING OR LEAKAGE ISSUES WHICH MAY OCCUR AS WATER-TIGHTNESS SHALL BE THE FULL RESPONSIBILITY OF THE INSTALLING CONTRACTOR.
12. FOR AN EXPLANATION OF EXPOSURE CATEGORIES THAT ACCOMPANY THE Vult WIND SPEEDS USED IN THIS DOCUMENT, SEE SECTION 26.7 OF ASCE 7

ANCHOR SCHEDULE:

SUBSTRATE	DESCRIPTION
CONCRETE: (4" THICK MIN, 3000 PSI MIN.)	(1)-1/4"Ø STAINLESS STEEL ITW BUILDEX TAPCON, 1¾" FULL EMBED TO CONCRETE, 2½" MIN. EDGE DISTANCE, 3" MIN. SPACING TO ANY ADJACENT ANCHOR.

TIE-DOWN BRACKET OFFSETS:

DIM. 1	4.50" MAX OFFSET FROM DATUM FACE
DIM. 2	24.50" MIN OFFSET FROM DATUM FACE
DIM. 3	25.25" MIN OFFSET FROM DATUM FACE
DIM. 4	13" MAX OFFSET FROM DATUM FACE

VISIT ECALC.IO/28800
FOR SITE SPECIFIC DEVIATIONS & MORE INFORMATION ABOUT THIS DOCUMENT OR SCAN THIS QR CODE
VISIT ENGINEERINGEXPRESS.COM/RHEEM FOR ADDITIONAL PLANS, REPORTS & RESOURCES

ENGINEERING EXPRESS®
CORPORATE OFFICE:
160 SW 12th AVE, SUITE 106
DEERFIELD BEACH, FL 33442
(954) 354-0660 | (866) 396-9999
TEAM@ENGINEERINGEXPRESS.COM
ENGINEERINGEXPRESS.COM

RHEEM SALES COMPANY, INC.
1100 ABERNATHY ROAD SUITE 1400
ATLANTA, GA
(770) 351-3000

MECHANICAL UNIT
STEEL TIE-DOWN CLIPS
FLORIDA BUILDING CODE SEVENTH EDITION (2020)

REMARKS	DRWN	CHK'D	DATE
INIT ISSUE	JAC	TSB	05/14/15
2017 FBC UPDATE	LAO	FLB	01/12/18
2020 FBC	CCB	RVN	10/19/20
	-	-	-
	-	-	-

THIS DOCUMENT IS THE PROPERTY OF ENGINEERING EXPRESS. AND SHALL NOT BE REPRODUCED IN WHOLE OR PART WITHOUT WRITTEN CONSENT OF ENGINEERING EXPRESS. ALTERATIONS, ADDITIONS OR OTHER MARKINGS TO THIS DOCUMENT ARE NOT PERMITTED AND INVALIDATE OUR CERTIFICATION.
COPYRIGHT ENGINEERING EXPRESS®

20-28800GA

SCALE: NTS UNLESS NOTED

1 OF 7

V:\Projects\20-28800 - NOA 18-0712.07 - Wind Load Cert of Mechanical Unit\WP\2020 FBC\40 - 20-28800 - NOA18-0719.07 - DWGp1-4.dwg
10/22/2020 - 3:14pm ricken

RHEEM SALES COMPANY, INC.

WIND LOAD CERTIFICATION OF MECHANICAL UNIT CABINETRY AND STEEL/ALUMINUM TIE-DOWN CLIPS: AT GRADE MOUNTED APPLICATIONS

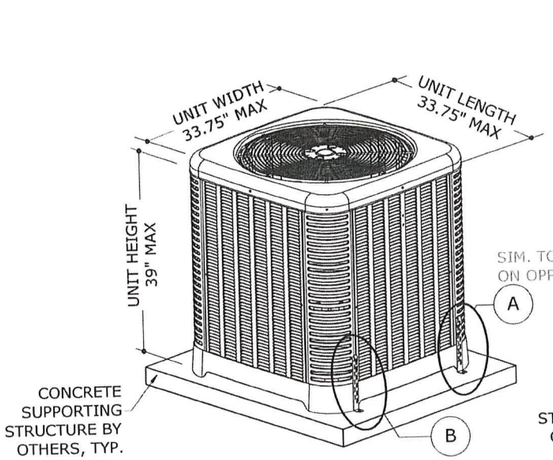

1/1 MECHANICAL UNIT — FRONT ISOMETRIC — N.T.S.

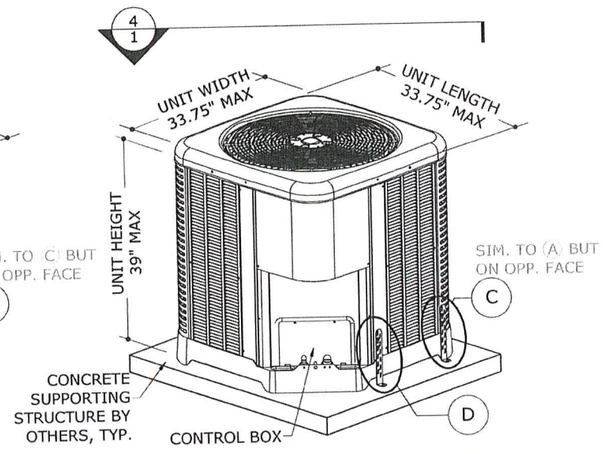

2/1 MECHANICAL UNIT — BACK ISOMETRIC — N.T.S.

THESE ISOMETRICS ARE INTENDED FOR DIAGRAMMATICAL PURPOSES ONLY; ALTERNATE RHEEM UNITS MAY VARY IN APPEARANCE

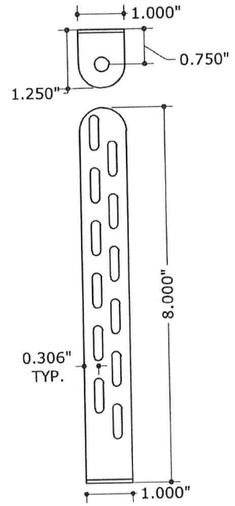

TIE-DOWN BRACKET

MIAMI TECH CLIP: 14GA (0.07") ASTM A653 Fu=90 KSI STEEL (CUTD8) OR 0.080" 5052-H32 ALUMINUM (CUTDA8), MIAMI TECH KIT # RRCUTDSMK OR RRCUTDASMK

(2)-#10 SMS PER BRACKET FOR UNITS UP TO 35" TALL. (3)-#10 SMS PER BRACKET FOR UNITS UP TO 39" TALL (ONLY (2) SMS SHOWN BELOW)

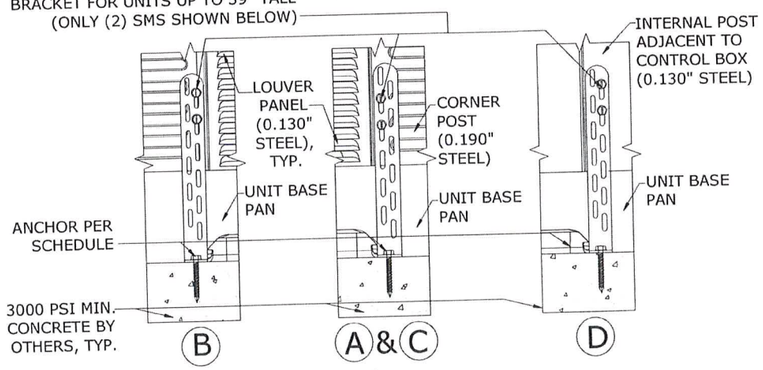

Ⓐ & Ⓒ ARE SIM AND OCCUR ON OPP. FACES

3/1 TIE-DOWN BRACKETS — ELEVATION — N.T.S.

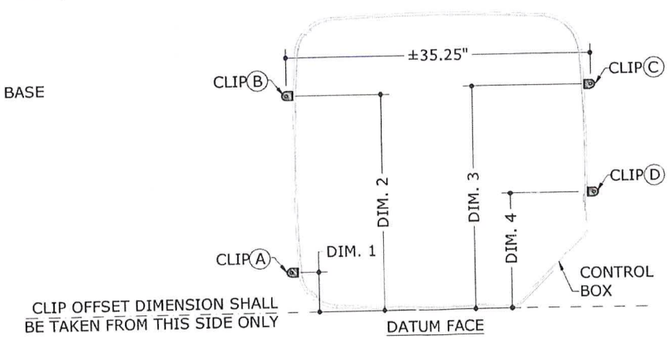

4/1 TIE-DOWN BRACKET LAYOUT — PLAN — N.T.S.

ANCHOR SCHEDULE:

SUBSTRATE	DESCRIPTION
CONCRETE: (4" THICK MIN, 3000 PSI MIN.)	(1)-1/4"Ø STAINLESS STEEL ITW BUILDEX TAPCON, 1¾" FULL EMBED TO CONCRETE, 2½" MIN. EDGE DISTANCE, 3" MIN. SPACING TO ANY ADJACENT ANCHOR.

TIE-DOWN BRACKET OFFSETS:

DIM. 1	4.50" MAX OFFSET FROM DATUM FACE
DIM. 2	28.00" MIN OFFSET FROM DATUM FACE
DIM. 3	29.00" MIN OFFSET FROM DATUM FACE
DIM. 4	13.00" MAX OFFSET FROM DATUM FACE

PRODUCT REVISED
as complying with the Florida Building Code
NOA–No. 20-1102.09
Expiration Date 02/25/2026
By
Miami–Dade Product Control

FRANK BENNARDO, PE
PE# 0046549 CA# 9885
No 46549
OCT 22 2020
STATE OF FLORIDA
PROFESSIONAL ENGINEER

DIGITAL SEAL NOTICE:
IF THIS DOCUMENT IS DIGITALLY SIGNED, THIS SHEET IS PART OF A DIGITALLY SIGNED FILE IT SHALL REMAIN IN DIGITAL FORMAT, SHALL BE VERIFIED BY ELECTRONIC MEANS, & PRINTED COPIES OF THIS DOCUMENT ARE NOT CONSIDERED SIGNED AND SEALED.
PRINTED DOCUMENT NOTICE:
IF THIS DOCUMENT IS PRINTED & DOESN'T CONTAIN AN ENGINEER'S ORIGINAL SIGNATURE & SEAL, THIS DOCUMENT IS VOID & NOT VALID FOR USE. PHOTOCOPIES ARE NOT PERMITTED FOR USE.

ENGINEERING EXPRESS
CORPORATE OFFICE:
160 SW 12th AVE, SUITE 106
DEERFIELD BEACH, FL 33442
(954) 354-0660 | (866) 396-9999
TEAM@ENGINEERINGEXPRESS.COM
ENGINEERINGEXPRESS.COM

RHEEM SALES COMPANY, INC.
1100 ABERNATHY ROAD SUITE 1400
ATLANTA, GA
(770) 351-3000

MECHANICAL UNIT
STEEL TIE-DOWN CLIPS
FLORIDA BUILDING CODE SEVENTH EDITION (2020)

REMARKS	DRWN	CHKD	DATE
INIT ISSUE	JAC	TSB	05/14/15
2017 FBC UPDATE	LAO	FLB	01/12/18
2020 FBC	CCB	RWN	10/19/20
.	-	-	-
.	-	-	-

THIS DOCUMENT IS THE PROPERTY OF ENGINEERING EXPRESS. AND SHALL NOT BE REPRODUCED IN WHOLE OR PART WITHOUT WRITTEN CONSENT OF ENGINEERING EXPRESS. ALTERATIONS, ADDITIONS, OR OTHER MARKINGS TO THIS DOCUMENT ARE NOT PERMITTED AND INVALIDATE OUR CERTIFICATION.
COPYRIGHT ENGINEERING EXPRESS®

20-28800GB

SCALE: NTS UNLESS NOTED

2 OF 7

V:\Projects\20-28800 - NOA 18-0712.07 - Wind Load Cert of Mechanical Unit\WP\2020 FBC\40 - 20-28800 - NOA18-0719.07 - DWGp1-4.dwg
10/22/2020 - 3:14pm rickn

RHEEM SALES COMPANY, INC.

WIND LOAD CERTIFICATION OF MECHANICAL UNIT CABINETRY AND STEEL/ALUMINUM TIE-DOWN CLIPS: AT GRADE MOUNTED APPLICATIONS

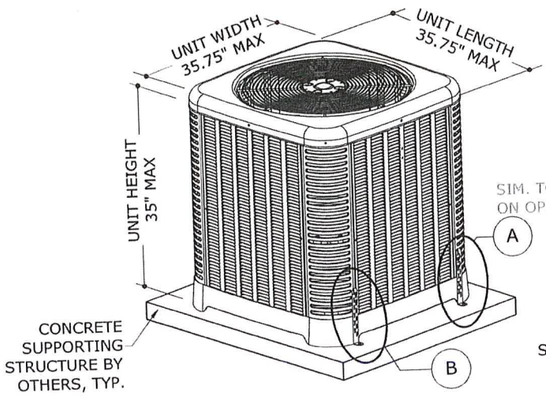

1/1 MECHANICAL UNIT — FRONT ISOMETRIC
N.T.S.

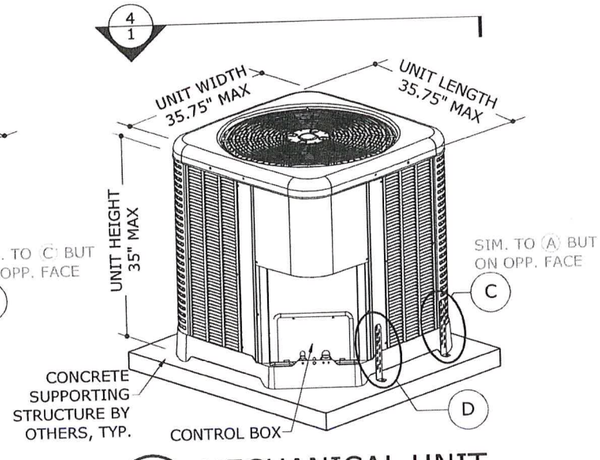

2/1 MECHANICAL UNIT — BACK ISOMETRIC
N.T.S.

THESE ISOMETRICS ARE INTENDED FOR DIAGRAMMATICAL PURPOSES ONLY; ALTERNATE RHEEM UNITS MAY VARY IN APPEARANCE

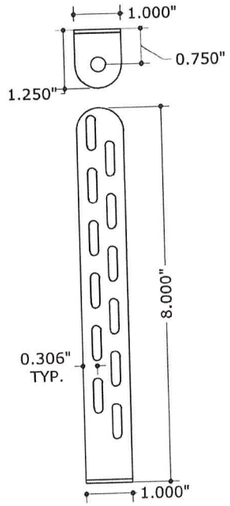

TIE-DOWN BRACKET

MIAMI TECH CLIP: 14GA (0.07") ASTM A653 Fu=90 KSI STEEL (CUTD8) OR 0.080" 5052-H32 ALUMINUM (CUTDA8), MIAMI TECH KIT # RRCUTDSMK OR RRCUTDASMK

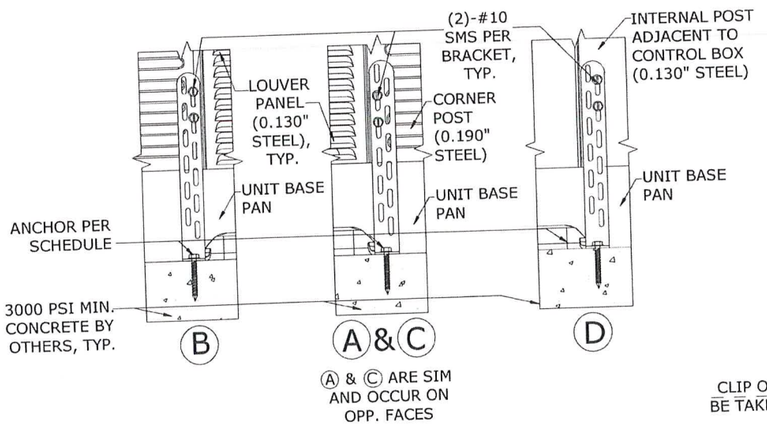

Ⓐ & Ⓒ ARE SIM AND OCCUR ON OPP. FACES

3/1 TIE-DOWN BRACKETS — ELEVATION
N.T.S.

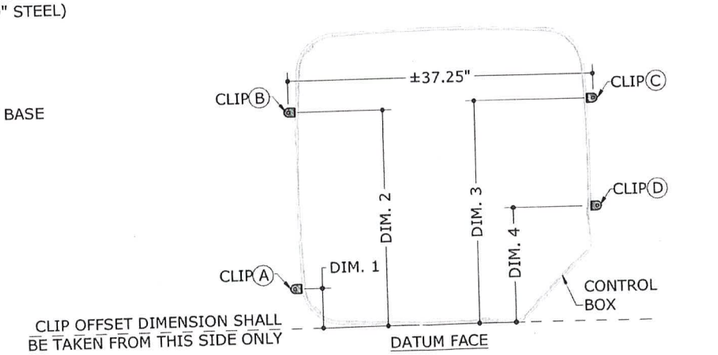

4/1 TIE-DOWN BRACKET LAYOUT — PLAN
N.T.S.

ANCHOR SCHEDULE:

SUBSTRATE	DESCRIPTION
CONCRETE: (4" THICK MIN, 3000 PSI MIN.)	(1)-1/4"Ø STAINLESS STEEL ITW BUILDEX TAPCON, 1¾" FULL EMBED TO CONCRETE, 2½" MIN. EDGE DISTANCE, 3" MIN. SPACING TO ANY ADJACENT ANCHOR.

TIE-DOWN BRACKET OFFSETS:

DIM. 1	4.50" MAX OFFSET FROM DATUM FACE
DIM. 2	30.00" MIN OFFSET FROM DATUM FACE
DIM. 3	31.00" MIN OFFSET FROM DATUM FACE
DIM. 4	13.00" MAX OFFSET FROM DATUM FACE

PRODUCT REVISED
as complying with the Florida Building Code
NOA–No. 20-1102.09
Expiration Date 02/25/2026
By
Miami–Dade Product Control

FRANK BENIARDO, PE
PE# 0046549 CA# 9885
LICENSE No 46549 STATE OF FLORIDA
OCT 22 2020

DIGITAL SEAL NOTICE: IF THIS DOCUMENT IS DIGITALLY SIGNED, THIS SHEET IS PART OF A DIGITALLY SIGNED FILE. IT SHALL REMAIN IN DIGITAL FORMAT, SHALL BE VERIFIED BY ELECTRONIC MEANS, & PRINTED COPIES OF THIS DOCUMENT ARE NOT CONSIDERED SIGNED AND SEALED.
PRINTED DOCUMENT NOTICE: IF THIS DOCUMENT IS PRINTED & DOESN'T CONTAIN AN ENGINEER'S ORIGINAL SIGNATURE & SEAL, THIS DOCUMENT IS VOID & NOT VALID FOR USE. PHOTOCOPIES ARE NOT PERMITTED FOR USE.

ENGINEERING EXPRESS
CORPORATE OFFICE:
160 SW 12th AVE, SUITE 106
DEERFIELD BEACH, FL 33442
(954) 354-0660 | (866) 396-9999
TEAM@ENGINEERINGEXPRESS.COM
ENGINEERINGEXPRESS.COM

RHEEM SALES COMPANY, INC.
1100 ABERNATHY ROAD SUITE 1400
ATLANTA, GA
(770) 351-3000

MECHANICAL UNIT
STEEL TIE-DOWN CLIPS
FLORIDA BUILDING CODE SEVENTH EDITION (2020)

REMARKS	DRWN	CHKD	DATE
INIT ISSUE	JAC	TSB	05/14/15
2017 FBC UPDATE	LAO	FLB	01/12/18
2020 FBC	CCB	RWN	10/19/20
-	-	-	-
-	-	-	-
-	-	-	-

THIS DOCUMENT IS THE PROPERTY OF ENGINEERING EXPRESS, AND SHALL NOT BE REPRODUCED IN WHOLE OR PART WITHOUT WRITTEN CONSENT OF ENGINEERING EXPRESS. ALTERATIONS, ADDITIONS, OR OTHER MARKINGS TO THIS DOCUMENT ARE NOT PERMITTED AND INVALIDATE EOR CERTIFICATION.
COPYRIGHT ENGINEERING EXPRESS®

20-28800GC
SCALE: NTS UNLESS NOTED
3 OF 7

V:\Projects\20-28800 - NOA 18-0712.07 - Wind Load Cert of Mechanical Unit\WP\2020 FBC\40 - 20-28800 - NOA18-0719.07 - DWGp1-4.dwg
10/22/2020 - 3:14pm rickn

RHEEM SALES COMPANY, INC.

WIND LOAD CERTIFICATION OF MECHANICAL UNIT CABINETRY AND STEEL/ALUMINUM TIE-DOWN CLIPS: AT GRADE MOUNTED APPLICATIONS

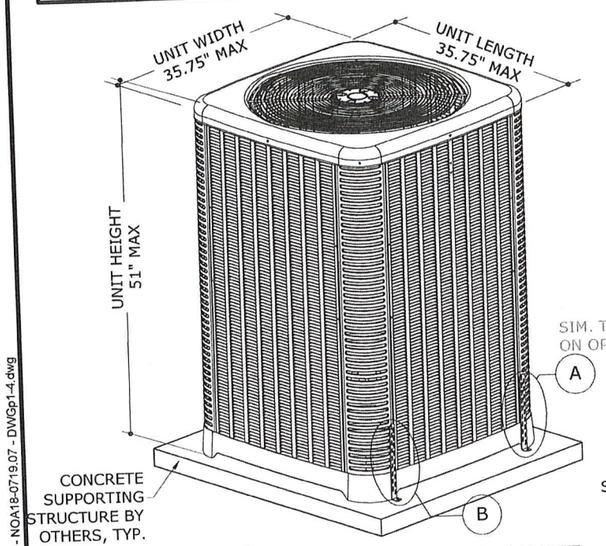

1/1 MECHANICAL UNIT
N.T.S. FRONT ISOMETRIC

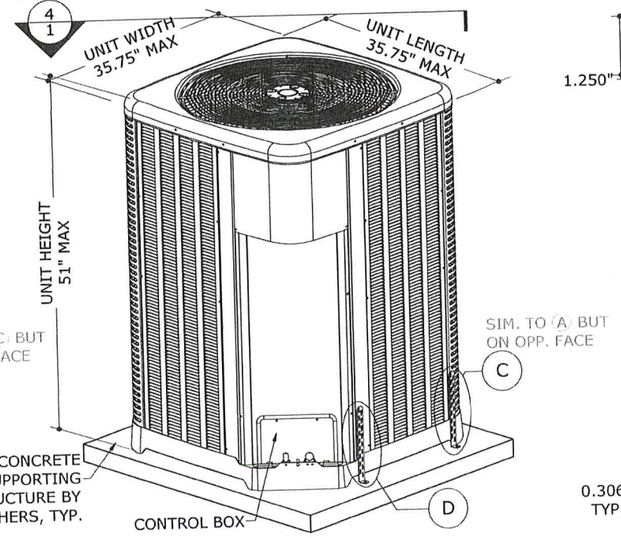

2/1 MECHANICAL UNIT
N.T.S. BACK ISOMETRIC

THESE ISOMETRICS ARE INTENDED FOR DIAGRAMMATICAL PURPOSES ONLY; ALTERNATE RHEEM UNITS MAY VARY IN APPEARANCE

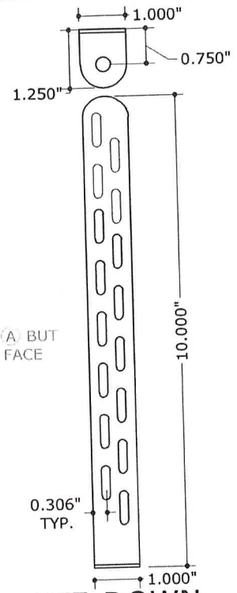

TIE-DOWN BRACKET

MIAMI TECH CLIP: 14GA (0.07") ASTM A653 Fu=90 KSI STEEL (CUTD10) OR 0.080" 5052-H32 ALUMINUM (CUTDA10), MIAMI TECH KIT # RRCUTDLK OR RRCUTDALK

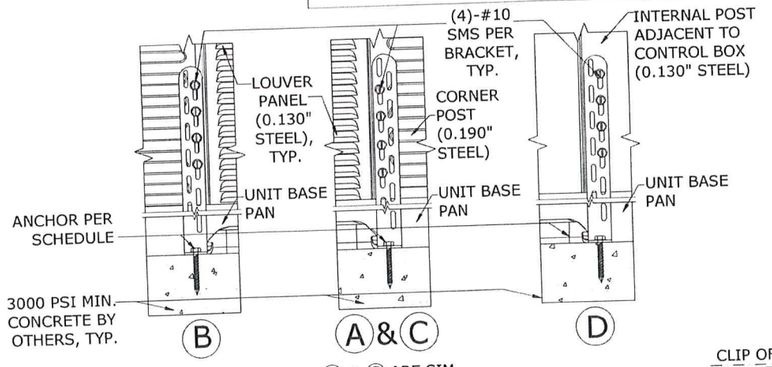

Ⓐ & Ⓒ ARE SIM AND OCCUR ON OPP. FACES

3/1 TIE-DOWN BRACKETS
N.T.S. ELEVATION

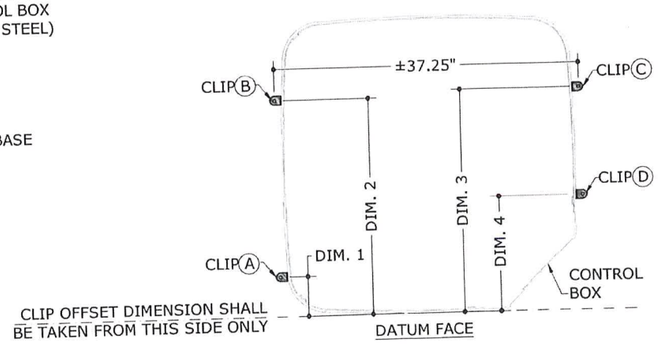

4/1 TIE-DOWN BRACKET LAYOUT
N.T.S. PLAN

ANCHOR SCHEDULE:

SUBSTRATE	DESCRIPTION
CONCRETE: (4" THICK MIN, 3000 PSI MIN.)	(1)-1/4"Ø CARBON STEEL SIMPSON STRONG BOLT 2, 1¾" MIN EMBED TO CONCRETE, 3" MIN. EDGE DISTANCE, 3" MIN. SPACING TO ANY ADJACENT ANCHOR.
	(1)-1/4"Ø CARBON STEEL DEWALT WEDGE BOLT+, 2⅛" MIN EMBED TO CONCRETE, 3" MIN. EDGE DISTANCE, 3" MIN. SPACING TO ANY ADJACENT ANCHOR.

SUPPORTING CONCRETE SUBSTRATE DEPTH SHALL BE A MINIMUM 1.5xANCHOR EMBED.
EITHER ANCHOR FROM THIS SCHEDULE MAY BE USED FOR INSTALLATION.

TIE-DOWN BRACKET OFFSETS:

DIM. 1	4.50" MAX OFFSET FROM DATUM FACE
DIM. 2	30.00" MIN OFFSET FROM DATUM FACE
DIM. 3	31.00" MIN OFFSET FROM DATUM FACE
DIM. 4	13.00" MAX OFFSET FROM DATUM FACE

PRODUCT REVISED
as complying with the Florida Building Code
NOA–No. 20-1102.09
Expiration Date 02/25/2026
By
Miami–Dade Product Control

FRANK BENNARDO, PE
PE# 0046549 CA# 9885
LICENSE
No 46549
OCT 22 2020
STATE OF
PROFESSIONAL ENGINEER

DIGITAL SEAL NOTICE:
IF THIS DOCUMENT IS DIGITALLY SIGNED, THIS SHEET IS PART OF A DIGITALLY SIGNED FILE. IT SHALL BE VIEWED IN DIGITAL FORMAT, SHALL BE VERIFIED BY ELECTRONIC MEANS, & PRINTED COPIES OF THIS DOCUMENT ARE NOT CONSIDERED SIGNED AND SEALED.
PRINTED DOCUMENT NOTICE:
IF THIS DOCUMENT IS PRINTED & DOESN'T CONTAIN AN ENGINEER'S ORIGINAL SIGNATURE & SEAL, THIS DOCUMENT IS VOID & NOT VALID FOR USE. PHOTOCOPIES ARE NOT PERMITTED FOR USE.

ENGINEERING EXPRESS®
CORPORATE OFFICE:
160 SW 12th AVE, SUITE 106
DEERFIELD BEACH, FL 33442
(954) 354-0660 | (866) 396-9999
TEAM@ENGINEERINGEXPRESS.COM
ENGINEERINGEXPRESS.COM

RHEEM SALES COMPANY, INC.
1100 ABERNATHY ROAD SUITE 1400
ATLANTA, GA
(770) 351-3000

MECHANICAL UNIT
STEEL TIE-DOWN CLIPS
FLORIDA BUILDING CODE SEVENTH EDITION (2020)

REMARKS	DRWN	CHKD	DATE
INIT ISSUE	JAC	TSB	05/14/15
2017 FBC UPDATE	LAO	FLB	01/12/18
2020 FBC	CCB	RWN	10/19/20
	-	-	-
	-	-	-
	-	-	-

THIS DOCUMENT IS THE PROPERTY OF ENGINEERING EXPRESS, AND SHALL NOT BE REPRODUCED IN WHOLE OR IN PART WITHOUT WRITTEN CONSENT OF ENGINEERING EXPRESS. ALTERATIONS, ADDITIONS OR OTHER MARKINGS TO THIS DOCUMENT ARE NOT PERMITTED AND INVALIDATE OUR CERTIFICATION.
COPYRIGHT ENGINEERING EXPRESS®

20-28800GD
SCALE: NTS UNLESS NOTED
4 OF 7

V:\Projects\20-28800 - NOA 18-0712.07 - Wind Load Cert of Mechanical Unit\WP\2020 FBC\40 - 20-28800 - NOA18-0719.07 - DWGp1-4.dwg
10/22/2020 - 3:21pm ricken

RHEEM SALES COMPANY, INC.

WIND LOAD CERTIFICATION OF MECHANICAL UNIT CABINETRY AND STEEL TIE-DOWN CLIPS: ROOF MOUNTED APPLICATIONS

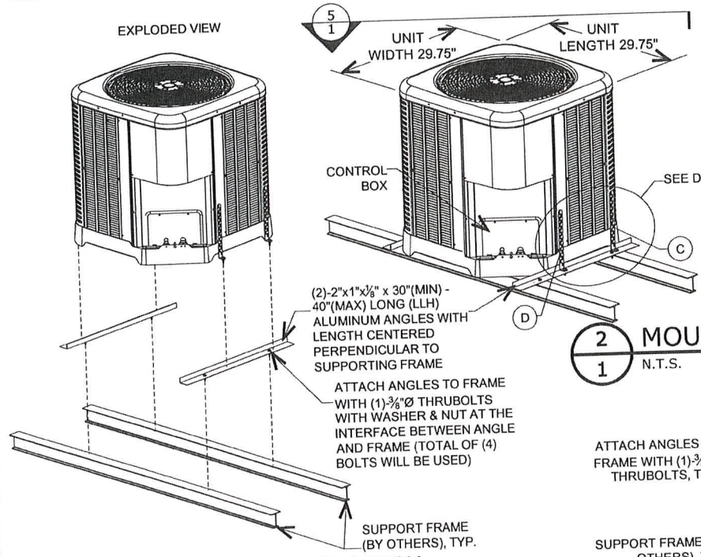

1/1 MOUNT EXPLODED VIEW
N.T.S. FRONT ISOMETRIC

THESE ISOMETRICS ARE INTENDED FOR DIAGRAMMATICAL PURPOSES ONLY; ALTERNATE RHEEM UNITS LISTED VARY IN APPEARANCE

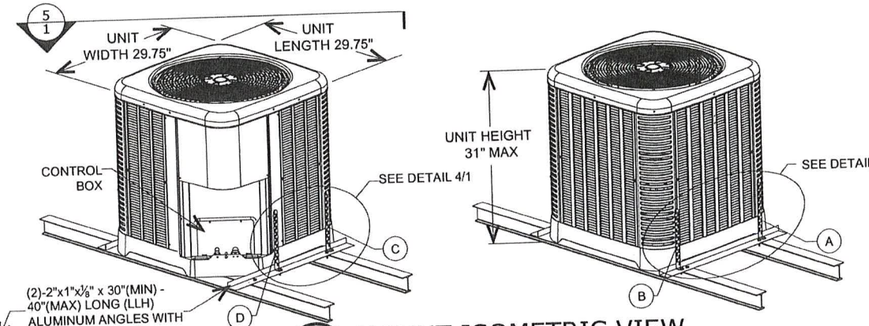

2/1 MOUNT ISOMETRIC VIEW
N.T.S. FRONT ISO / BACK ISO

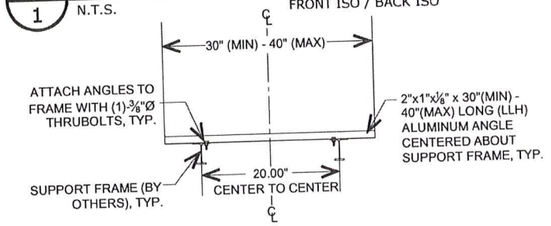

3/1 SUPPORT ANGLE
N.T.S. ELEVATION

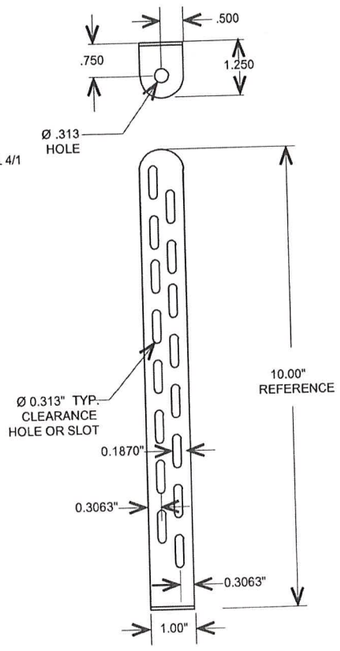

TIE-DOWN CLIP

MIAMI TECH CLIP: 14GA (0.07") ASTM A653 Fu=90 KSI STEEL (CUTD10), MIAMI TECH KIT # RRCUTD30K

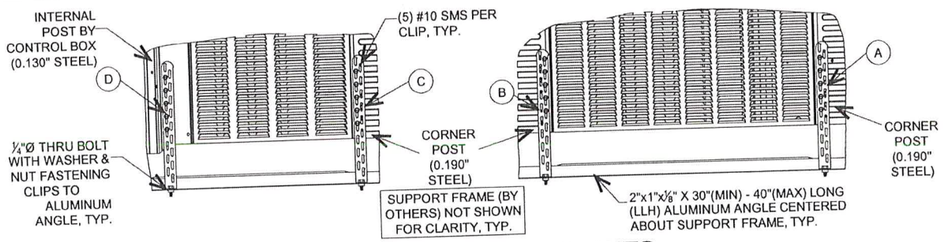

4/1 TIE-DOWN CLIP ATTACHMENTS
N.T.S. ELEVATIONS

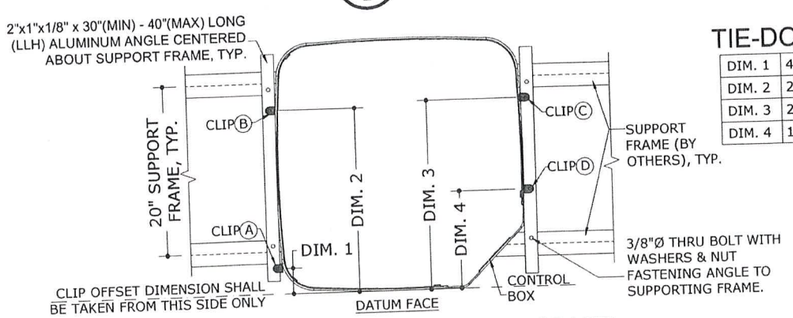

TIE-DOWN CLIP OFFSETS:

DIM. 1	4.50" MAX OFFSET FROM DATUM FACE
DIM. 2	24.50" MIN OFFSET FROM DATUM FACE
DIM. 3	25.25" MIN OFFSET FROM DATUM FACE
DIM. 4	13" MAX OFFSET FROM DATUM FACE

5/1 TIE-DOWN CLIP LAYOUT
N.T.S. PLAN

NOTE: UNIT SHALL BE CENTERED ABOUT THE 20" RAIL TO RAIL SUPPORTING FRAME (BY OTHERS)

PRODUCT REVISED
as complying with the Florida Building Code
NOA–No. 20-1102.09
Expiration Date 02/25/2026
By
Miami–Dade Product Control

VISIT ECALC.IO/28800
FOR SITE SPECIFIC DEVIATIONS & MORE INFORMATION ABOUT THIS DOCUMENT OR SCAN THIS QR CODE
VISIT ENGINEERINGEXPRESS.COM/RHEEM FOR ADDITIONAL PLANS, REPORTS & RESOURCES

APPROVED DESIGN CRITERIA:

APPROVED DESIGN CRITERIA:	
	200 PSF LATERAL WIND LOAD
	100 PSF UPLIFT WIND LOAD (CONCURRENT)

DESIGN NOTES:

SITE-SPECIFIC PRESSURE REQUIREMENTS AS DETERMINED IN ACCORDANCE WITH ASCE 7 AND CHAPTER 16 OF THE FLORIDA BUILDING CODE SHALL BE LESS THAN OR EQUAL TO THE DESIGN PRESSURE CAPACITY VALUES LISTED HEREIN FOR ANY ASSEMBLY AS SHOWN. DESIGN PRESSURE REQUIREMENTS SHALL BE DETERMINED BY A REGISTERED DESIGN PROFESSIONAL ON A JOB-SPECIFIC BASIS IN ACCORDANCE WITH THE GOVERNING CODE.

GENERAL NOTES:

1. THIS SYSTEM HAS BEEN DESIGNED AND SHALL BE FABRICATED IN ACCORDANCE WITH THE REQUIREMENTS OF THE FLORIDA BUILDING CODE SEVENTH EDITION (2020). THIS SYSTEM MAY BE USED WITHIN AND OUTSIDE THE HIGH VELOCITY HURRICANE ZONE. THIS DESIGN IS NOT INTENDED TO CERTIFY IMPACT RESISTANCE OF THE MECHANICAL UNIT CABINETRY.
2. NO 33-1/3% INCREASE IN ALLOWABLE STRESS HAS BEEN USED IN THE DESIGN OF THIS SYSTEM.
3. DESIGN & CERTIFICATION OF THE UNIT CABINETRY IS APPROVED THROUGH TEST REPORT#0323.01-15 BY AMERICAN TEST LAB OF SOUTH FLORIDA.
4. ALL DIMENSIONS AND THE MINIMUM WEIGHT (120 LB MINIMUM) OF MECHANICAL UNIT SHALL CONFORM TO LIMITATIONS STATED HEREIN. ALL MECHANICAL SPECIFICATIONS (CLEAR SPACE, TONNAGE, ETC.) SHALL BE AS PER MANUFACTURER RECOMMENDATIONS AND ARE THE EXPRESS RESPONSIBILITY OF THE CONTRACTOR.
5. ALL SHEET METAL SCREWS USED TO FASTEN CLIPS TO MECHANICAL UNITS SHALL BE #10 (14 MIN THREADS PER INCH) GRADE 5 STEEL OR EQUIVALENT ONLY. BOLTS USED TO FASTEN ALUMINUM ANGLES TO SUPPORTING FRAME (BY OTHERS) SHALL BE ASTM F593 410 STAINLESS STEEL OR EQUIVALENT AND SHALL UTILIZE SAE GRADE WASHERS & NUTS. PROVIDE (5) PITCHES MINIMUM PAST THE THREAD PLANE FOR SHEET METAL SCREWS. ALL FASTENERS SHALL HAVE APPROPRIATE CORROSION PROTECTION TO PREVENT ELECTROLYSIS. ALL FASTENER CONNECTIONS TO ALUMINUM SHALL PROVIDE 2xDIAMETER EDGE DISTANCE.
6. ALUMINUM ANGLES SPECIFIED HEREIN SHALL BE 6061-T6 ALUMINUM ONLY.
7. CONNECTIONS TO THE SUPPORTING FRAME (BY OTHERS) CONSIDER A FRAME MEMBER THAT IS 6061-T6 MIN ALUMINUM WITH A MINIMUM 0.094" THICK FLANGE AT ATTACHMENT POINT. PERFORMANCE OF THE RAIL AS A STRUCTURAL MEMBER TO SUPPORT THE UNIT ASSEMBLY SHALL BE PER SEPARATE CERTIFICATION.
8. THE CONTRACTOR IS RESPONSIBLE TO INSULATE ALL MEMBERS FROM DISSIMILAR MATERIALS TO PREVENT ELECTROLYSIS.
9. ELECTRICAL GROUND, WHEN REQUIRED, TO BE DESIGNED & INSTALLED BY OTHERS.
10. THE ADEQUACY OF ANY EXISTING STRUCTURE TO WITHSTAND SUPERIMPOSED LOADS SHALL BE VERIFIED BY THE ONSITE DESIGN PROFESSIONAL AND IS NOT INCLUDED IN THIS CERTIFICATION.EXCEPT AS EXPRESSLY PROVIDED HEREIN, NO ADDITIONAL CERTIFICATIONS OR AFFIRMATIONS ARE INTENDED.
11. THE SYSTEM DETAILED HEREIN IS GENERIC AND DOES NOT PROVIDE INFORMATION FOR A SPECIFIC SITE. FOR SITE CONDITIONS DIFFERENT FROM THE CONDITIONS DETAILED HEREIN, A LICENSED ENGINEER OR REGISTERED ARCHITECT SHALL PREPARE SITE SPECIFIC DOCUMENTS FOR USE IN CONJUNCTION WITH THIS DOCUMENT.
12. WATER-TIGHTNESS OF EXISTING HOST SUBSTRATE SHALL BE THE FULL RESPONSIBILITY OF THE INSTALLING CONTRACTOR. CONTRACTOR SHALL ENSURE THAT ANY REMOVED OR ALTERED WATERPROOFING MEMBRANE IS RESTORED AFTER FABRICATION AND INSTALLATION OF STRUCTURE PROPOSED HEREIN. THIS ENGINEER SHALL NOT BE RESPONSIBLE FOR ANY WATERPROOFING OR LEAKAGE ISSUES WHICH MAY OCCUR AS WATER-TIGHTNESS SHALL BE THE FULL RESPONSIBILITY OF THE INSTALLING CONTRACTOR.

FRANK BENNARDO, PE
PE# 0046549 CA# 9885

FRANK L. BENNARDO LICENSE No. 46549 STATE OF FLORIDA PROFESSIONAL ENGINEER
OCT 22 2020

DIGITAL SEAL NOTICE: IF THIS DOCUMENT IS DIGITALLY SIGNED, THIS SHEET IS PART OF A DIGITALLY SIGNED FILE. IT SHALL REMAIN IN DIGITAL FORMAT, SHALL BE VERIFIED BY ELECTRONIC MEANS, & PRINTED COPIES OF THIS DOCUMENT ARE NOT CONSIDERED SIGNED AND SEALED.
PRINTED DOCUMENT NOTICE: IF THIS DOCUMENT IS PRINTED & DOESN'T CONTAIN AN ENGINEER'S ORIGINAL SIGNATURE & SEAL, THIS DOCUMENT IS VOID & NOT VALID FOR USE. PHOTOCOPIES ARE NOT PERMITTED FOR USE.

ENGINEERING EXPRESS®
CORPORATE OFFICE:
160 SW 12th AVE, SUITE 106
DEERFIELD BEACH, FL 33442
(954) 354-0660 | (866) 396-9999
TEAM@ENGINEERINGEXPRESS.COM
ENGINEERINGEXPRESS.COM

RHEEM SALES COMPANY, INC.
1100 ABERNATHY ROAD SUITE 1400
ATLANTA, GA
(770) 351-3000

MECHANICAL UNIT
STEEL TIE-DOWN CLIPS
FLORIDA BUILDING CODE SEVENTH EDITION (2020)

REMARKS	DRWN	CHKD	DATE
INIT ISSUE	JAC	TSB	05/14/15
2017 FBC UPDATE	LAO	FLB	01/12/18
2020 FBC	CCB	RWN	10/19/20
	-	-	-
	-	-	-
	-	-	-

THIS DOCUMENT IS THE PROPERTY OF ENGINEERING EXPRESS, AND SHALL NOT BE REPRODUCED IN WHOLE OR PART WITHOUT WRITTEN CONSENT OF ENGINEERING EXPRESS. ALTERATIONS, ADDITIONS OR OTHER MARKINGS TO THIS DOCUMENT ARE NOT PERMITTED AND INVALIDATE OUR CERTIFICATION.

COPYRIGHT ENGINEERING EXPRESS®

20-28800RE

SCALE: NTS UNLESS NOTED

5 OF 7

V:\Projects\20-28800 - NOA 18-0712.07 - Wind Load Cert of Mechanical Unit\WP\2020 FBC\40 - 20-28800 - NOA18-0719.07 - DWG\5-7.dwg
10/22/2020 - 3:25pm rickn

RHEEM SALES COMPANY, INC.

WIND LOAD CERTIFICATION OF MECHANICAL UNIT CABINETRY AND STEEL TIE-DOWN CLIPS: ROOF MOUNTED APPLICATIONS

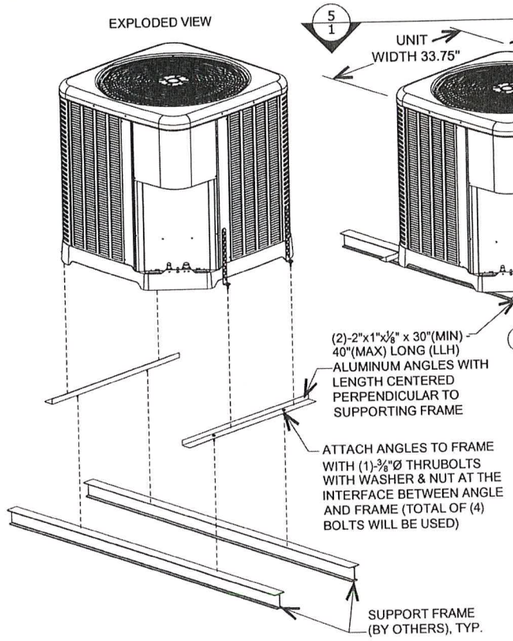

1/1 MOUNT EXPLODED VIEW
N.T.S. FRONT ISOMETRIC

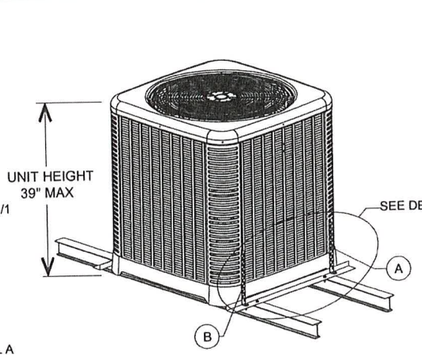

2/1 MOUNT ISOMETRIC VIEW
N.T.S. FRONT ISO / BACK ISO

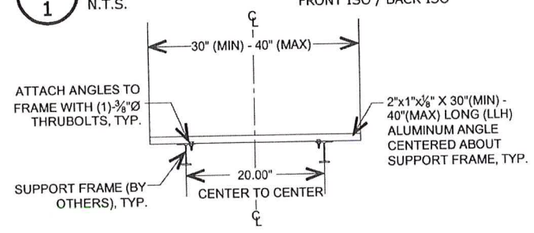

3/1 SUPPORT ANGLE
N.T.S. ELEVATION

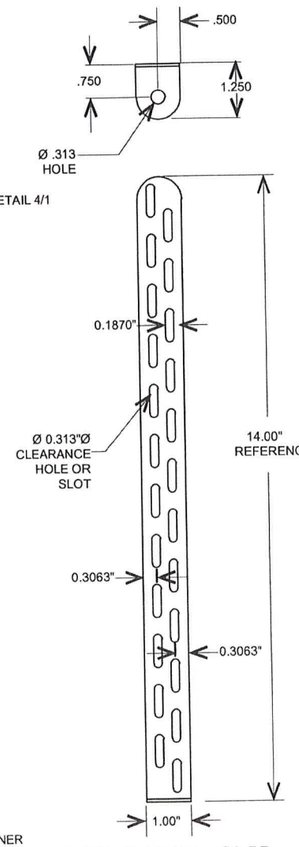

TIE-DOWN CLIP

MIAMI TECH CLIP: 12GA (0.09") ASTM A653 Fu=90 KSI STEEL (CUTD14), MIAMI TECH KIT # RRCUTD34K

THESE ISOMETRICS ARE INTENDED FOR DIAGRAMMATICAL PURPOSES ONLY; ALTERNATE RHEEM UNITS MAY VARY IN APPEARANCE

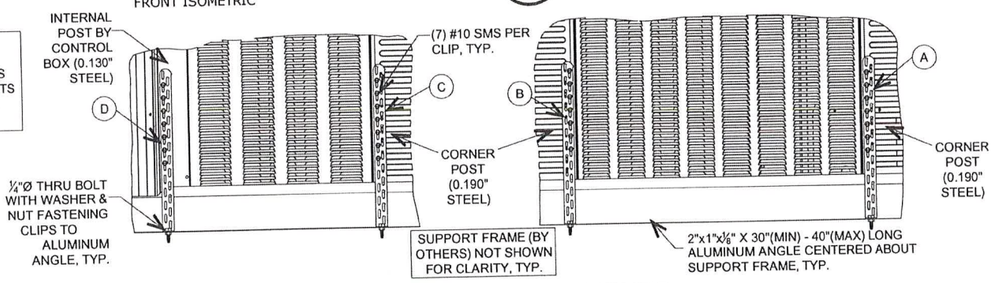

4/1 TIE-DOWN CLIP ATTACHMENTS
N.T.S. ELEVATIONS

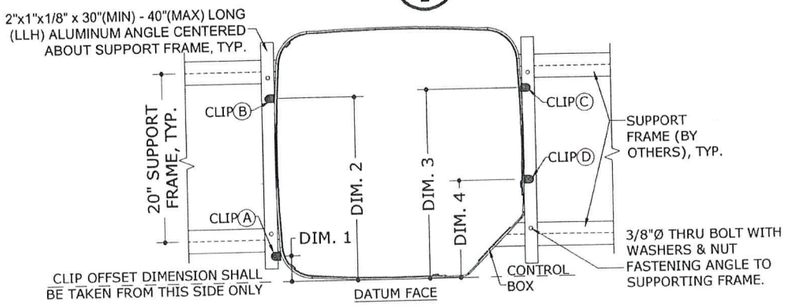

5/1 TIE-DOWN CLIP LAYOUT
N.T.S. PLAN

NOTE: UNIT SHALL BE CENTERED ABOUT THE 20" RAIL TO RAIL SUPPORTING FRAME (BY OTHERS)

TIE-DOWN CLIP OFFSETS:

DIM. 1	4.50" MAX OFFSET FROM DATUM FACE
DIM. 2	28.00" MIN OFFSET FROM DATUM FACE
DIM. 3	29.00" MIN OFFSET FROM DATUM FACE
DIM. 4	13.00" MAX OFFSET FROM DATUM FACE

PRODUCT REVISED
as complying with the Florida Building Code
NOA–No. 20-1102.09
Expiration Date 02/25/2026
By
Miami–Dade Product Control

FRANK BENNARDO, PE
PE # 0046549 CA# 9885
LICENSE NO 46549
STATE OF FLORIDA
OCT 22 2020
PROFESSIONAL ENGINEER

DIGITAL SEAL NOTICE: IF THIS DOCUMENT IS DIGITALLY SIGNED, THIS SHEET IS PART OF A DIGITALLY SIGNED FILE. IT SHALL REMAIN IN DIGITAL FORMAT, SHALL BE VERIFIED BY ELECTRONIC MEANS. PRINTED COPIES OF THIS DOCUMENT ARE NOT CONSIDERED SIGNED AND SEALED.
PRINTED DOCUMENT NOTICE: IF THIS DOCUMENT IS PRINTED & DOESN'T CONTAIN AN ENGINEER'S ORIGINAL SIGNATURE & SEAL, THIS DOCUMENT IS VOID & NOT VALID FOR USE. PHOTOCOPIES ARE NOT PERMITTED FOR USE.

ENGINEERING EXPRESS®
CORPORATE OFFICE:
160 SW 12th AVE, SUITE 106
DEERFIELD BEACH, FL 33442
(954) 354-0660 | (866) 396-9999
TEAM@ENGINEERINGEXPRESS.COM
ENGINEERINGEXPRESS.COM

RHEEM SALES COMPANY, INC.
1100 ABERNATHY ROAD SUITE 1400
ATLANTA, GA
(770) 351-3000

MECHANICAL UNIT
STEEL TIE-DOWN CLIPS
FLORIDA BUILDING CODE SEVENTH EDITION (2020)

REMARKS	DRWN	CHKD	DATE
INIT ISSUE	JAC	TSB	05/14/15
2017 FBC UPDATE	LAO	FLB	01/12/18
2020 FBC	CCB	RWN	10/19/20
-	-	-	-
-	-	-	-

THIS DOCUMENT IS THE PROPERTY OF ENGINEERING EXPRESS, AND SHALL NOT BE REPRODUCED IN WHOLE OR PART WITHOUT WRITTEN CONSENT OF ENGINEERING EXPRESS. ALTERATIONS, ADDITIONS, OR OTHER MARKINGS TO THIS DOCUMENT ARE NOT PERMITTED AND INVALIDATE OUR CERTIFICATION.
COPYRIGHT ENGINEERING EXPRESS®

20-28800RE

SCALE: NTS UNLESS NOTED

6 OF 7

V:\Projects\20-28800 - NOA 18-0712.07 - Wind Load Cert of Mechanical Unit\WP\2020 FBC\40 - 20-28800 - NOA18-0719.07 - DWGp5-7.dwg
10/22/2020 - 3:26pm rickn

RHEEM SALES COMPANY, INC.

WIND LOAD CERTIFICATION OF MECHANICAL UNIT CABINETRY AND STEEL TIE-DOWN CLIPS: ROOF MOUNTED APPLICATIONS

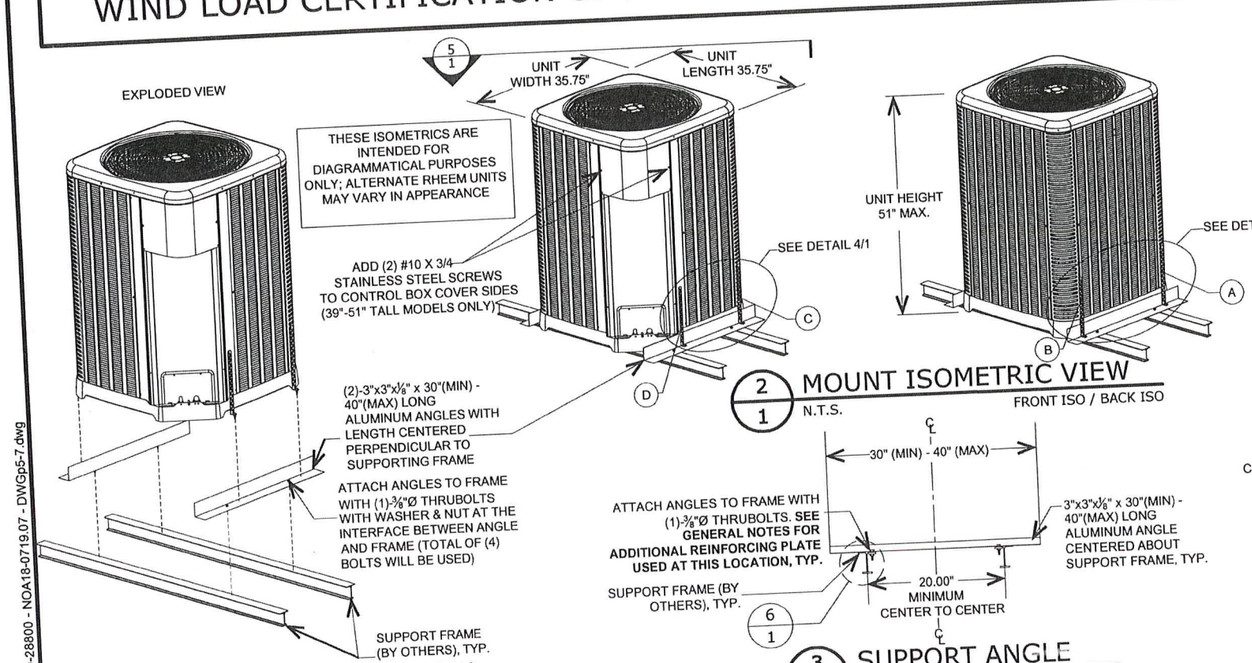

5/1 UNIT DIMENSIONS

1/1 MOUNT EXPLODED VIEW — N.T.S. — FRONT ISOMETRIC

2/1 MOUNT ISOMETRIC VIEW — N.T.S. — FRONT ISO / BACK ISO

6/1

3/1 SUPPORT ANGLE — N.T.S. — ELEVATION

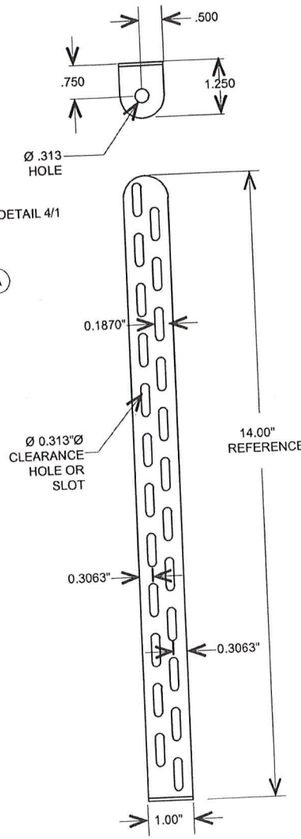

TIE-DOWN CLIP

MIAMI TECH CLIP: 12GA (0.09") ASTM A653 Fu=90 KSI STEEL (CUTD14), MIAMI TECH KIT # RRCUTD36K

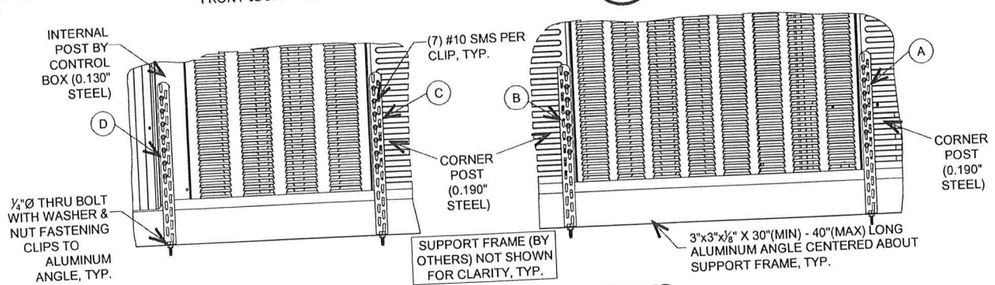

4/1 TIE-DOWN CLIP ATTACHMENTS — N.T.S. — ELEVATIONS

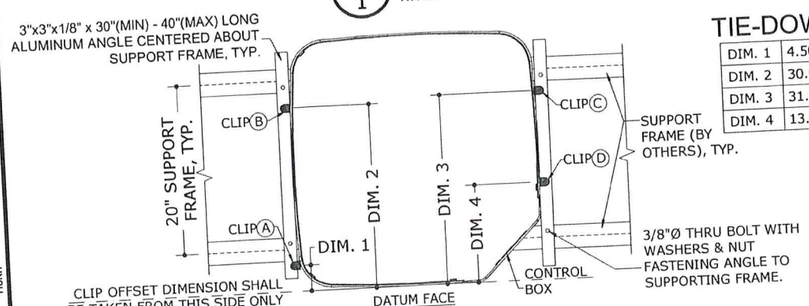

TIE-DOWN CLIP OFFSETS:

DIM. 1	4.50" MAX OFFSET FROM DATUM FACE
DIM. 2	30.00" MIN OFFSET FROM DATUM FACE
DIM. 3	31.00" MIN OFFSET FROM DATUM FACE
DIM. 4	13.00" MAX OFFSET FROM DATUM FACE

5/1 TIE-DOWN CLIP LAYOUT — N.T.S. — PLAN

NOTE: UNIT SHALL BE CENTERED ABOUT THE 20" RAIL TO RAIL SUPPORTING FRAME (BY OTHERS)

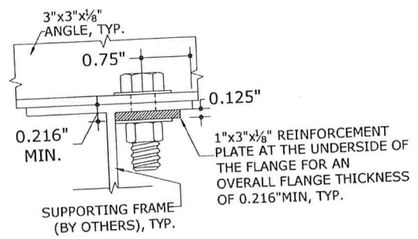

6/1 REINFORCING PLATE — 6" = 1'-0" — SECTION

PRODUCT REVISED
as complying with the Florida Building Code
NOA–No. 20-1102.09
Expiration Date 02/25/2026
By
Miami–Dade Product Control

PE# 0046549 CA# 9885

FRANK V. BENNARDO LICENSE No. 46549 STATE OF FLORIDA PROFESSIONAL ENGINEER
OCT 22 2020

DIGITAL SEAL NOTICE: IF THIS DOCUMENT IS DIGITALLY SIGNED, THIS SHEET IS PART OF A DIGITALLY SIGNED FILE. IT SHALL REMAIN IN DIGITAL FORMAT, SHALL BE VERIFIED BY ELECTRONIC MEANS, & PRINTED COPIES OF THIS DOCUMENT ARE NOT CONSIDERED SIGNED AND SEALED.

PRINTED DOCUMENT NOTICE: IF THIS DOCUMENT IS PRINTED & DOESN'T CONTAIN AN ENGINEER'S ORIGINAL SIGNATURE & SEAL, THIS DOCUMENT IS VOID & NOT VALID FOR USE. PHOTOCOPIES ARE NOT PERMITTED FOR USE.

ENGINEERING EXPRESS®
CORPORATE OFFICE:
160 SW 12th AVE, SUITE 106
DEERFIELD BEACH, FL 33442
(954) 354-0660 | (866) 396-9999
TEAM@ENGINEERINGEXPRESS.COM
ENGINEERINGEXPRESS.COM

RHEEM SALES COMPANY, INC.
1100 ABERNATHY ROAD SUITE 1400
ATLANTA, GA
(770) 351-3000

MECHANICAL UNIT
STEEL TIE-DOWN CLIPS
FLORIDA BUILDING CODE SEVENTH EDITION (2020)

REMARKS	DRWN	CHKD	DATE
INIT ISSUE	JAC	TSB	05/14/15
2017 FBC UPDATE	LAO	FLB	01/12/18
2020 FBC	CCB	RWN	10/19/20
	-	-	-
	-	-	-

THIS DOCUMENT IS THE PROPERTY OF ENGINEERING EXPRESS, AND SHALL NOT BE REPRODUCED IN WHOLE OR PART WITHOUT WRITTEN CONSENT OF ENGINEERING EXPRESS. ALTERATIONS, ADDITIONS, OR OTHER MARKINGS TO THIS DOCUMENT ARE NOT PERMITTED AND INVALIDATE OUR CERTIFICATION.
COPYRIGHT ENGINEERING EXPRESS®

20-28800RE

SCALE: NTS UNLESS NOTED

7 OF 7

V:\Projects\20-28800 - NOA 18-0712.07 - Wind Load Cert of Mechanical Unit\WP\2020 FBC\40 - 20-28800 - NOA18-0719.07 - DWG\p5-7.dwg
11/22/2020 - 3:26pm rickn

Ordered By:



Zendegui Law Group
1111 Kane Concourse, Suite 310, Bay Harbor Islands, FL 33154
(305) 579-3333 | Fax (305) 579-3330 | www.gdzlaw.com

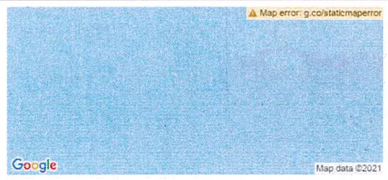



This survey shall not be used for construction/permitting purposes without written consent from the land surveyor who has signed and sealed this survey.

CITY OF MIAMI SPRINGS
BUILDING DEPARTMENT

DEC 14 2021

RECEIVED

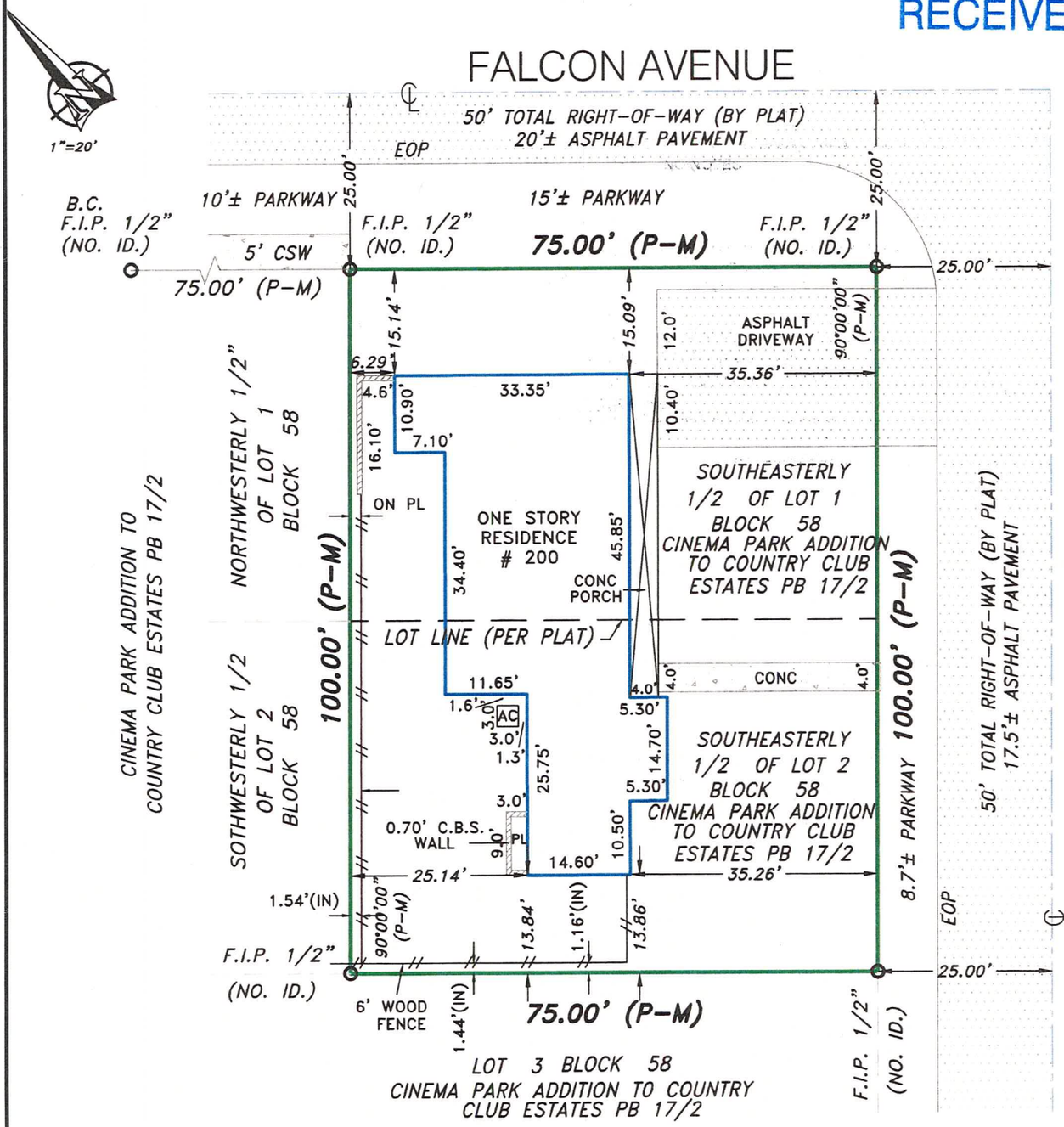

Accepted By: _____

Property Address:
200 N. Esplanade Drive
Miami Springs, FLORIDA 33166

Notes: NO NOTES

SURVEYOR'S CERTIFICATION: I HEREBY CERTIFY THAT THIS BOUNDARDY SURVEY IS A TRUE AND CORRECT REPRESENTATION OF A SURVEY PREPARED UNDER MY DIRECTION. THIS COMPLIES WITH THE MINIMUM TECHNICAL STANDARDS AS SET FORTH BY THE STATE OF FLORIDA BOARD OF PROFESSIONAL LAND SURVEYOR'S IN CHAPTER 5J-17.051 THROUGH 5J-17.052, FLORIDA ADMNISTRATIVE CODE PURSUANT TO 427 027 FLORIDA STATUTES.

SIGNED _____ FOR THE FIRM
FERNANDO FERNANDEZ
STATE OF FLORIDA P.S.M. NO. 6765

LICENSED SURVEYOR AND MAPPER
NO. 6765
07/29/2021
STATE OF FLORIDA
PROFESSIONAL SURVEYOR AND MAPPER

NOT VALID WHITOUT AN AUTHENTIC ELECTRONIC SIGNATURE AND AUTHENTICATED ELECTRONIC SEAL AND OR THIS MAP IS NOT VALID WITHOUT THE SIGNATURE AND THE ORIGINAL RAISED SEAL OF A LICENSED SURVEYOR AND MAPPER

M.E. Land Surveying, Inc.
10665 SW 190th Street
Suite 3110
Miami, FL 33157
Phone: (305) 740-3319
Fax: (305) 669-3190
LB#: 7989

ME LAND

Surveyor's Legend

CITY OF MIAMI SPRINGS
BUILDING DEPARTMENT
DEC 14 2021
RECEIVED

	PROPERTY LINE						
	STRUCTURE						
	CONC. BLOCK WALL	FND	FOUND IRON PIPE / PIN AS NOTED ON PLAT	B.R.	BEARING REFERENCE	TEL.	TELEPHONE FACILITIES
—X—X—	CHAIN-LINK FENCE OR WIRE FENCE	LB#	LICENSE # - BUSINESS	△	CENTRAL ANGLE OR DELTA	U.P.	UTILITY POLE
	WOOD FENCE	LS#	LICENSE # - SURVEYOR	R	RADIUS OR RADIAL	E.U.B.	ELECTRIC UTILITY BOX
	IRON FENCE	CALC	CALCULATED POINT	RAD.	RADIAL TIE	SEP.	SEPTIC TANK
	EASEMENT	SET	SET PIN	N.R.	NON RADIAL	D.F.	DRAINFIELD
	CENTER LINE	▲	CONTROL POINT	TYP.	TYPICAL	A/C	AIR CONDITIONER
	WOOD DECK	■	CONCRETE MONUMENT	I.R.	IRON ROD	S/W	SIDEWALK
	CONCRETE	◒	BENCHMARK	I.P.	IRON PIPE	DWY	DRIVEWAY
	ASPHALT	ELEV	ELEVATION	N&D	NAIL & DISK	SCR.	SCREEN
	BRICK / TILE	P.T.	POINT OF TANGENCY	PK NAIL	PARKER-KALON NAIL	GAR	GARAGE
	WATER	P.C.	POINT OF CURVATURE	D.H.	DRILL HOLE	ENCL.	ENCLOSURE
	APPROXIMATE EDGE OF WATER	P.R.M.	PERMANENT REFERENCE MONUMENT	Ⓦ	WELL	N.T.S.	NOT TO SCALE
	COVERED AREA	P.C.C.	POINT OF COMPOUND CURVATURE	🚒	FIRE HYDRANT	F.F.	FINNISHED FLOOR
	TREE	P.R.C.	POINT OF REVERSE CURVATURE	Ⓜ	M.H. MANHOLE	T.O.B.	TOP OF BANK
	POWER POLE	P.O.B.	POINT OF BEGINNING	O.H.L.	OVERHEAD LINES	E.O.W.	EDGE OF WATER
	CATCH BASIN	P.O.C.	POINT OF COMMENCEMENT	TX	TRANSFORMER	E.O.P	EDGE OF PAVEMENT
C.U.E.	COUNTY UTILITY EASEMENT	P.C.P.	PERMANENT CONTROL POINT	CATV	CABLE TV RISER	C.V.G.	CONCRETE VALLEY GUTTER
I.E./E.E.	INGRESS / EGRESS EASEMENT	M	FIELD MEASURED	W.M.	WATER METER	B.S.L.	BUILDING SETBACK LINE
U.E.	UTILITY EASEMENT	P	PLATTED MEASUREMENT	P/E	POOL EQUIPMENT	S.T.L.	SURVEY TIE LINE
		D	DEED	CONC.	CONCRETE SLAB	℄	CENTER LINE
		C	CALCULATED	ESMT	EASEMENT	R/W	RIGHT-OF-WAY
		L.M.E.	LAKE OR LANDSCAPE MAINT. ESMT.	D.E.	DRAINAGE EASEMENT	P.U.E.	PUBLIC UTILITY EASEMENT
		R.O.E.	ROOF OVERHANG EASEMENT	L.B.E.	LANDSCAPE BUFFER EASEMENT	C.M.E.	CANAL MAINTENANCE EASEMENT
				L.A.E.	LIMITED ACCESS EASEMENT	A.E.	ANCHOR EASEMENT

Property Address:

200 N. Esplanade Drive
Miami Springs, FLORIDA 33166

Flood Information:

Community Number: MIAMI SPRINGS/ 120653
Panel Number: 12086C0283
Suffix: L
Date of Firm Index: 09/11/2009
Flood Zone: AH
Base Flood Elevation: 7.0'
Date of Field Work: 07/27/2021
Date of Completion: 07/29/2021

General Notes:

1.) The Legal Description used to perform this survey was supplied by others. This survey does not determine or is not to imply ownership
2.) This survey only shows above ground improvements. Underground utilities, footings, or encroachments are not located on this survey map
3.) The minimum relative distance accuracy for this type of Survey is 1 foot in 10,000 feet. The accuracy obtained by measurement and calculation of closed geometric figures was found to exceed this requirement. Well-identified features as depicted on the Survey Map were measure to an estimated horizontal positional accuracy of 1/10 foot.
4.) If there is a septic tank, well, or drain field on this survey, the location of such items was shown to us by others and the information was not verified.
5.) Examination of the abstract of title will have to be made to determine recorded instruments, if any, affect this property. The lands shown herein were not abstracted for easement or other recorded encumbrances not shown on the plat.
6.) Wall ties are done to the face of the wall.
7.) Fence ownership is not determined.
8.) Bearings referenced to line noted B.R also are assumed.
9.) Dimensions shown are platted and measured unless otherwise shown.
10.) No identification found on property corners unless noted.
11.) Not valid unless sealed with the signing surveyors embossed seal.
12.) Boundary survey means a drawing and/or graphic representation of the survey work performed in the field, could be drawn at a shown scale and/or not to scale.
13.) Elevations if shown are based upon NGVD 1929 unless otherwise noted.
14.) This is a BOUNDARY SURVEY unless otherwise noted.
15.) This survey is exclusive for the use of the parties to whom it is certified. The certifications do not extend to any unnamed parties.
16.) This survey shall not be used for construction/permitting purposes without written consent from the land surveyor who has signed and sealed this survey.

Legal Description:

Southeasterly 1/2 of Lots 1 and 2, Block 58, CINEMA PARK ADDITION TO COUNTRY CLUB ESTATES, according to the plat thereof, as recorded in Plat Book 17, Page 2, of the Public Records of Miami-Dade County, Florida.

Printing Instructions:

While viewing the survey in any PDF Reader, select the File Drop-down and select "Print". Select a color printer, if available; or at least one with 8.5" x 14" (legal) paper.
Select ALL for Print Range, and the # of copies you would like to print out.
Under the "Page Scaling" please make sure you have selected "None".
Do not check the "Auto-rotate and Center" box.
Check the "Choose Paper size by PDF" checkbox, then click OK to print.

Certified To:
Jovany Jimenez and Ambar Sara Preval
Zendegui Law Group, P.A.
Banking Mortgage Services; BMS Corp.and/or Secretary of Housing and Urban Development of Washington
its successors and/or assigns as their interest may appear.

Please copy below for policy preparation purposes only:

This policy does not insure against loss or damage by reason of the following exceptions: Any rights, easements, interests, or claims which may exist by reason of, or reflected by, the following facts shown on the survey prepared by *Fernando Fernandez* *, for M.E. Land Surveying Inc., dated* *07/29/2021* *bearing Job #* *B-99236* :

a. *NO NOTES*

M.E. Land Surveying, Inc.

10665 SW 190th Street, Suite 3110 Miami, FL 33157
Phone: (305) 740-3319
Fax: (305) 669-3190
LB#: 7989

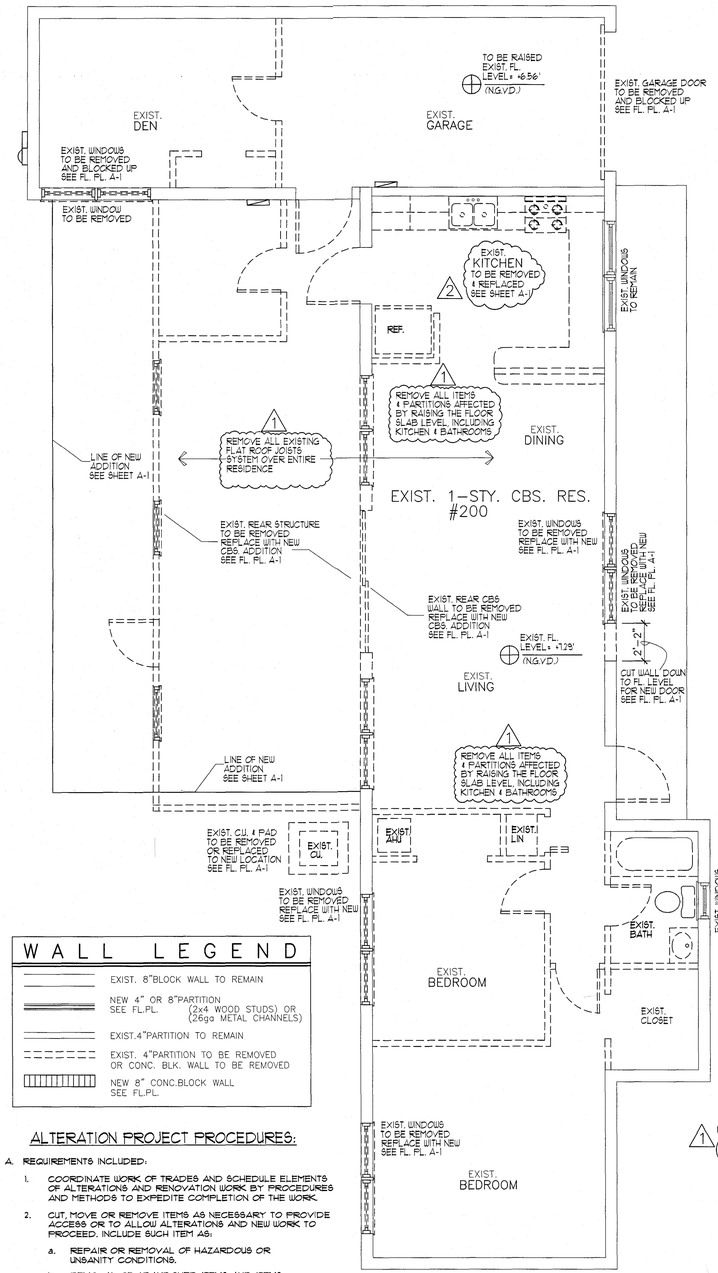

WALL LEGEND

- EXIST. 8"BLOCK WALL TO REMAIN
- NEW 4" OR 8"PARTITION SEE FL.PL. (2x4 WOOD STUDS) OR (26ga METAL CHANNELS)
- EXIST.4"PARTITION TO REMAIN
- EXIST. 4"PARTITION TO BE REMOVED OR CONC. BLK. WALL TO BE REMOVED
- NEW 8" CONC.BLOCK WALL SEE FL.PL.

EXIST./DEMO FLOOR PLAN

SCALE: 1/4"=1'-0"

ALTERATION PROJECT PROCEDURES:

A. REQUIREMENTS INCLUDED:

1. COORDINATE WORK OF TRADES AND SCHEDULE ELEMENTS OF ALTERATIONS AND RENOVATION WORK BY PROCEDURES AND METHODS TO EXPEDITE COMPLETION OF THE WORK.
2. CUT, MOVE OR REMOVE ITEMS AS NECESSARY TO PROVIDE ACCESS OR TO ALLOW ALTERATIONS AND NEW WORK TO PROCEED. INCLUDE SUCH ITEM AS:
   a. REPAIR OR REMOVAL OF HAZARDOUS OR UNSANITY CONDITIONS.
   b. REMOVAL OF ABANDONED ITEMS AND ITEMS SERVING NO USEFUL PURPOSE, SUCH AS ABANDONED PIPING, CONDUIT, AND WIRING.
   c. REMOVAL OF UNSUITABLE OR EXTRAGENEOUS MATERIALS NOT MARKED FOR SALVAGE, SUCH AS ABANDONED EQUIPMENT AND DEBRIS INCLUDING ROTTED WOOD, RUSTED METALS AND DETERIORATED CONCRETE.
3. ALTERATIONS AND CONNECTIONS OF NEW CONTRUCTION TO EXISTING CONSTRUCTION OCCUR AT DUST SENSITIVE AREAS, EXECUTE ALL MEASURES TO COMPLETELY CONTROL AND SEPARATE DUST FROM EXISTING AREA AND EQUIPMENT.

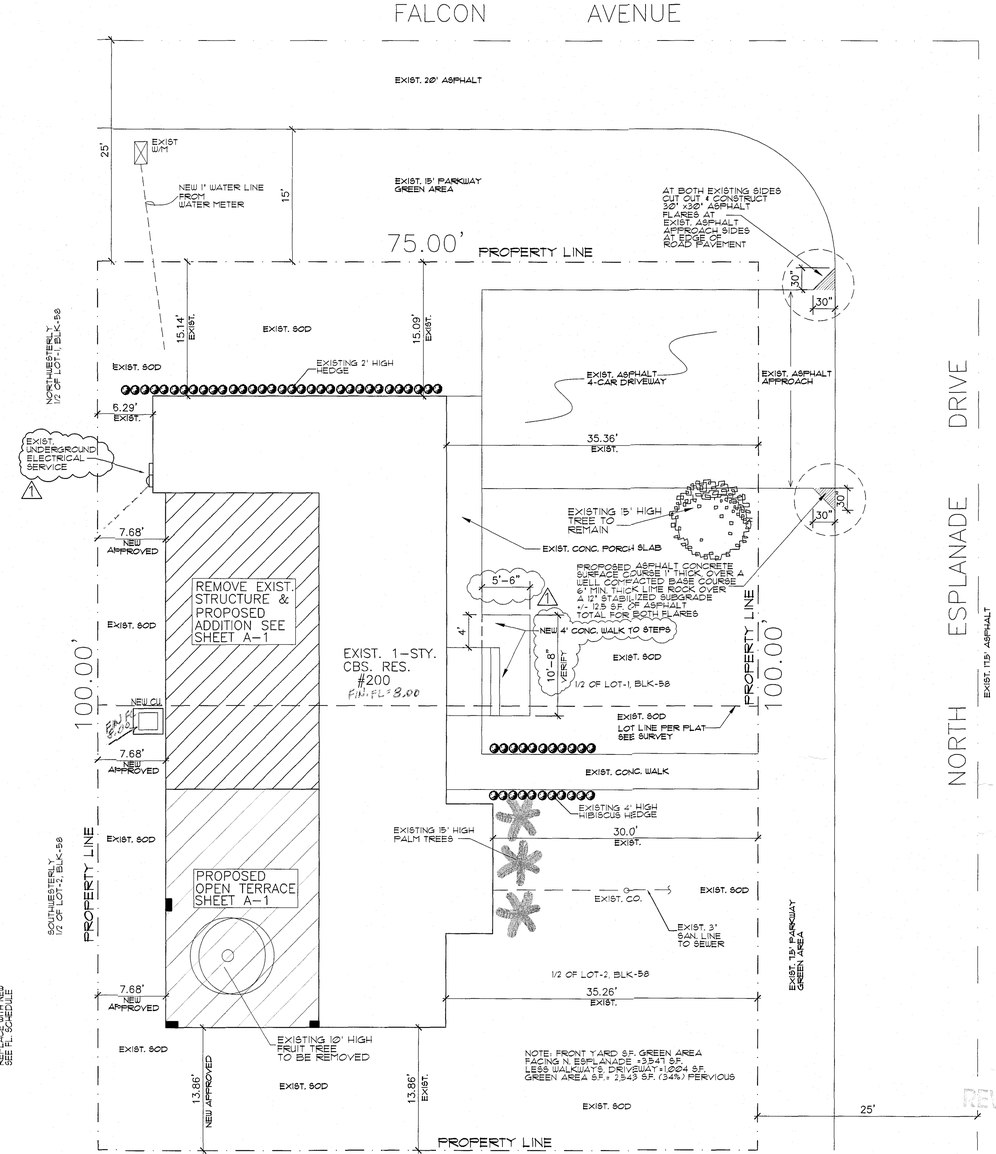

SITE PLAN

SCALE: 1/8"=1'-0"
SEE SURVEY

SCOPE OF WORK:

NOTE: THIS IS A EXISTING RESIDENCE WITH MOST OF IT BEING REMODELED.
ALSO THERE IS A PROPOSED ADDITION BEING ADDED TO THE REAR OF RESIDENCE.
REMOVE AND REPLACE ALL WINDOWS AND EXTERIOR DOORS AT EXISTING RESIDENCE.
REMOVE ALL EXIST. FLAT ROOF AND PROVIDE NEW TRUSS SYSTEM OVER ENTIRE STRUCTURE.
REMOVE ALL EXIST. PARTITIONS AND KITCHEN CABINETS (TO REINSTALL LATER).
REMOVE ALL EXIST. BATHROOMS DUE TO RAISING OF THE FLOOR SLAB, SEE D-1 & A-2
PROVIDE NEW ROOF FINISHES AT EXISTING AND NEW ADDITION UNDER A SEPARATE PERMIT.
ADDITION CONSISTS OF 2 NEW BEDROOMS & 2 NEW BATHROOMS WITH DEN.
REMOVE GARAGE DOOR AND BLOCK UP WITH WINDOW AT FRONT AS SHOWN ON A-1.
RELOCATE CERTAIN WINDOW & DOOR OPENINGS AND BLOCK UP OTHER WALL AREAS.
SEE FLOOR PLAN AND SECTIONS FOR NEW & EXIST. BLOCK WALLS & NEW TIE BEAMS.
PROVIDE NEW CONCRETE STARTER COLUMNS & CONC. BEAMS AS SHOWN ON PLAN.
WITH NEW WINDOWS/DOORS, & VERTICAL REBAR TIE COLUMNS AT NEW WALLS.
SEE PLAN FOR ALL NEW AND EXISTING CONDITIONS BEING ALTERED AND OR MODIFIED.
SEE MECHANICAL WORK AS PART OF THIS PERMIT.
SEE ELECTRICAL WORK AS PART OF THIS PERMIT.
SEE PLUMBING WORK AS PART OF THIS PERMIT.

LEGAL DESCRIPTION: FOLIO#=05-3118-016-1590

SELY 1/2 LOTS 1 & 2, BLOCK 58, OF "CINEMA PARK-COUNTRY CLUB ESTS ADDITION" PLAT BOOK 17, PAGE 2 AS RECORDED 13114-2660 1. OF THE PUBLIC RECORDS OF MIAMI DADE COUNTY.

NOTE: THE ARCHITECT OR ENGINEER OF RECORD IS NOT RESPONSIBLE FOR ANY UNEXPECTED OR UNFORESEEN OR HIDDEN EXISTING CONDITIONS THAT HAVE NOTHING TO DO WITH THE PROPOSED WORK. THESE ISSUES IF ANY WILL BE ADDRESSED SEPARATELY, AND ADDED TO THE SCOPE OF WORK.

NOTE: TRADE CONTRACTOR IS RESPONSIBLE FOR ANY COST EFFECTIVE REVISIONS TO PLANS IF ORIGINAL DESIGN OF APPROVED PLANS ARE NOT FOLLOWED. A DIFFERENT METHOD IN DESIGN MAY BE USED AFTER CONSTRUCTION & PERMIT DOCUMENTS ARE ACTIVE IN FIELD, BUT AGAIN TRADE CONTRACTOR WILL BE RESPONSIBLE FOR ANY INCURRED COSTS DUE TO ANY REQUIRED REVISION WORK ON THE ORIGINAL APPROVED PLANS. ANY AND ALL CHANGES TO PLANS MUST BE APPROVED BY THE ENGINEER OR ARCHITECT OF RECORD & BUILDING DEPT. AND WILL BE BILLED ACCORDINGLY.

CALL 48 HOURS BEFORE YOU DIG IN FLORIDA
IT'S THE LAW
1-800-432-4770
SUNSHINE STATE ONE CALL OF FLORIDA, INC.

1

FLOOD CRITERIA INFO:
FLOOD ZONE= AH
BASE FLOOD ELEVATION 7.0'
NEW FLOOR SLAB ELEVATION 8.0' (N.G.V.D.)
SEE ELEVATION CERTIFICATE ATTACHED.

ENVIRONMENTAL RESOURCES & LANDSCAPING TREES NOTES:

NOTE: (1) FRUIT TREE WILL BE REMOVED DURING CONSTRUCTION.
NOTE: FOR ANYOTHER NEARBY TREES THAT MAY BE AFFECTED BY THE NEW CONSTRUCTION PROTECT EXIST. TREES. PROVIDE 10'-12' BARRIES AROUND TREES TO REMAIN WITH A TEMPORARY PLYWD. PARTITIONS OR SAFETY MESH ALL DAMAGED PLANT MATERIAL INCLUDING SOD MUST BE RESTORED PRIOR TO FINAL BUILDING INSPECTION.
ALL OTHER EXISTING SHRUBS & HEDGES INCLUDING SOD TO REMAIN AS IS.

DESIGN CRITERIA

CODE EDITION: 2020-7th EDITION FLORIDA BUILDING CODE AS PER CODE REFERENCE STANDARDS CHAPTER 35
CODE REFERENCES: ASCE/SEI 7-16, ACI 318-14, NDS 2018 AWC AF & PA-92, ASTM A615, ASTM D-698, & AITC, AISI S100-16,
MECHANICAL 2020-7th EDITION FLORIDA BUILDING CODE
ELECTRICAL 2020-7th EDITION FLORIDA BUILDING CODE
PLUMBING 2020-7th EDITION FLORIDA BUILDING CODE
NATIONAL ELECTRIC CODE (NEC 2017)
EXISTING BUILDINGS 2020-7th EDITION FLORIDA BUILDING CODE
FLORIDA FIRE PREVENTION CODE 2020 7th Edition
FLORIDA ACCESSIBILITY CODE 2020 7th Edition
ASCE/SEI 7-16 EXPOSURE CONDITION INDICATED=C
CONSTRUCTION TYPE VB UNPROTECTED
OCCUPANCY CLASSIFICATION R-3
ALTERATION LEVEL-3

I CERTIFY THIS IS BEING DESIGNED TO WITHSTAND 175 MPH WIND SPEED ACCORDING TO ASCE 7-16 AS REQUIRED BY THE FLORIDA BUILDING CODE REVISED 2020 EDITION 7th EDITION

ZONING LEGEND

ZONING CLASSIFICATION	SINGLE FAMILY RESIDENTIAL (R-1C) DISTRICT
TOTAL GROSS LOT AREA:	12,500 SQFT.
NET LOT AREA :	12,500 SQFT.
LOT COVERAGE REQUIRED:	40%
LOT COVERAGE PROVIDED	32%
other conc. impervious areas 850 SF. GREEN AREA TO REMAIN 4,275 SF.	34%
EXIST. BUILD'G. FT. PRINT	1,718 SQFT.
NEW ADDITIONAL S.F.	+ 189 SQFT.
EXIST. BEING REMOVED/REMODELED	- 404 SQFT.
TOTAL NEW UNDER A/C AREA S.F.	1,507 SQFT. A/C
NEW OPEN TERRACE S.F.	+ 467 SQFT.
(NEW TOTAL FT. PRINT S.F.)=	2,314 SQFT.

3 PARKING SPACES REQUIRED.
EXIST. CONC. DRIVEWAY FOR 4 CARS AT FRONT YARD.

SETBACKS REQUIRED:	
FRONT	30.00'
INTERIOR SIDE	7.50'
STREET SIDE	15.00'
REAR	25.00'
BETWEEN BUILDINGS	20.00'

SETBACKS PROVIDED:	
FRONT	15.09' EXIST. CONDITION APPV'D.
INTERIOR SIDE	7.61' PROPOSED
STREET SIDE	38.36' EXIST. CONDITION APPV'D.
REAR	13.86' MATCH EXIST. CONDITION APPV'D.
BETWEEN BUILDINGS	N/A

INDEX OF DRAWINGS

SP-1/D-1 SITE PLAN AND EXIST. & DEMO FLOOR PLAN
A-1 PROPOSED FLOOR PLANS, SCHED. & DETS.
A-2 FOUNDATIONS & STRUCTURAL SECTIONS/DETAILS
A-3 WINDOW SCHEDULES & DETAILS
A-4 PROPOSED ELEVATIONS
A-5 ROOF PLAN & STRUCTURAL DETAILS
A-6 ROOF DIAGRAM & OTHER DETAILS, NOTES.
M-1 MECHANICAL SHEET AND SCHEDULES, DETAILS
E-1 ELECTRICAL SHEET AND SCHEDULES, RISERS
P-1 PLUMBING SHEET AND DETAILS.
P-2 PLUMBING SHEET AND DETAILS.

CITY OF MIAMI SPRINGS
APPROVED
FOR PERMIT OF
BUILDING DIRECTOR
INSPECTOR
DIRECTOR
FOR

OFFICE COPY
CITY OF MIAMI SPRINGS

SEPARATE PERMIT REQUIRED FOR ROOFING, PLUMBING ELECTRICAL, MECHANICAL, SHUTTERS, WINDOWS, DOORS AND DRIVEWAYS

NO.	DATE
1	2-22-22 REVISED TO RAISE EXIST. FL. LEVEL TO 8.0

PROJECT NAME: ADDITION TO RESIDENCE FOR:
OWNER/PH: AMBAR PREVAL 786-587-7391
ADDRESS: 200 N. ESPLANADE DRIVE MIAMI SPRINGS, FLORIDA 33166
PROJECT ADD: SAME

Guillermo Ramon Gonzalez
9000 SW. 168th Avenue Miami Florida 33196 Ph:305-484-8171
Registered Architect #13960 Ph:786-237-5154 (assistant)

Guillermo Ramon Gonzalez
R.A. 13960
STATE OF FLORIDA

101521

SP-1
D-1

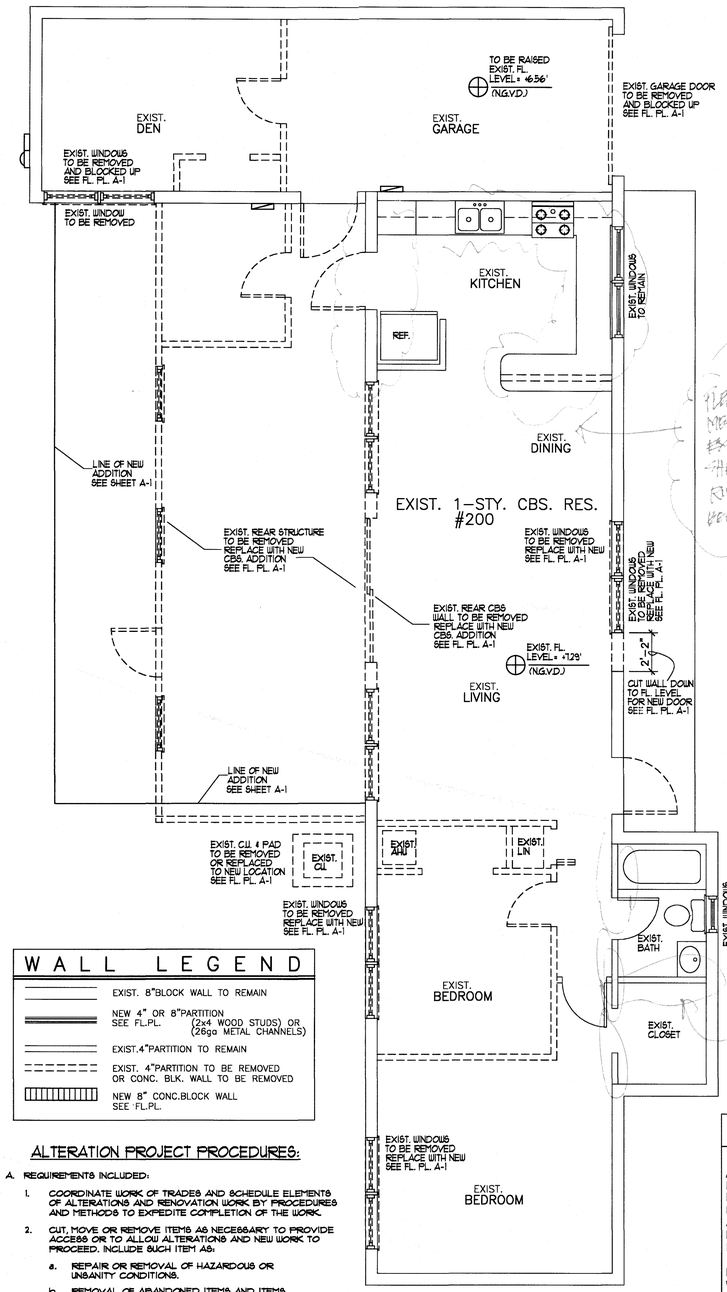

WALL LEGEND

- EXIST. 8"BLOCK WALL TO REMAIN
- NEW 4" OR 8"PARTITION SEE FL.PL. (2x4 WOOD STUDS) OR (26ga METAL CHANNELS)
- EXIST.4"PARTITION TO REMAIN
- EXIST. 4"PARTITION TO BE REMOVED OR CONC. BLK. WALL TO BE REMOVED
- NEW 8" CONC.BLOCK WALL SEE FL.PL.

ALTERATION PROJECT PROCEDURES:

A. REQUIREMENTS INCLUDED:

1. COORDINATE WORK OF TRADES AND SCHEDULE ELEMENTS OF ALTERATIONS AND RENOVATION WORK BY PROCEDURES AND METHODS TO EXPEDITE COMPLETION OF THE WORK.
2. CUT, MOVE OR REMOVE ITEMS AS NECESSARY TO PROVIDE ACCESS OR TO ALLOW ALTERATIONS AND NEW WORK TO PROCEED. INCLUDE SUCH ITEM AS:
   a. REPAIR OR REMOVAL OF HAZARDOUS OR UNSANITY CONDITIONS.
   b. REMOVAL OF ABANDONED ITEMS AND ITEMS SERVING NO USEFUL PURPOSE, SUCH AS ABANDONED PIPING, CONDUIT, AND WIRING.
   c. REMOVAL OF UNSUITABLE OR EXTRAGENEOUS MATERIALS NOT MARKED FOR SALVAGE, SUCH AS ABANDONED EQUIPMENT AND DEBRIS INCLUDING ROTTED WOOD, RUSTED METALS AND DETERIORATED CONCRETE.
3. ALTERATIONS AND CONNECTIONS OF NEW CONTRUCTION TO EXISTING CONSTRUCTION OCCUR AT DUST SENSITIVE AREAS. EXECUTE ALL MEASURES TO COMPLETELY CONTROL AND SEPARATE DUST FROM EXISTING AREA AND EQUIPMENT.

N

EXIST./DEMO FLOOR PLAN

SCALE:1/4"=1'-0"

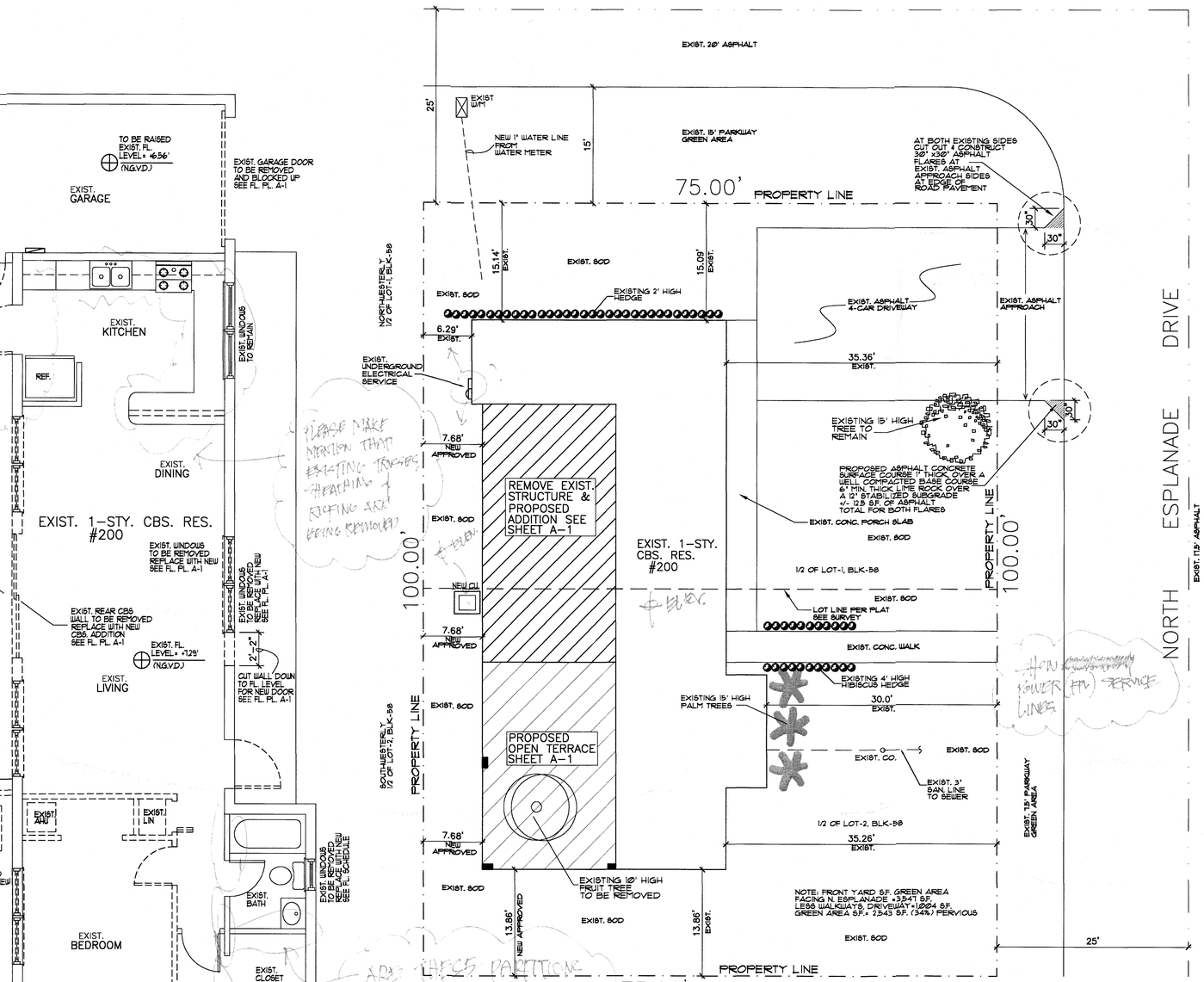

N

SITE PLAN

SCALE: 1/8"=1'-0"
SEE SURVEY

SCOPE OF WORK:

NOTE: THIS IS A EXISTING RESIDENCE WITH A PORTION OF IT BEING REMODELED.
ALSO THERE IS A PROPOSED ADDITION BEING ADDED TO THE REAR OF RESIDENCE.
REMOVE AND REPLACE ALL WINDOWS AND EXTERIOR DOORS AT EXISTING RESIDENCE.
REMOVE ALL EXIST. FLAT ROOF AND PROVIDE NEW TRUSS SYSTEM OVER ENTIRE STRUCTURE.
PROVIDE NEW ROOF FINISHES AT EXISTING AND NEW ADDITION UNDER A SEPARATE PERMIT.
ADDITION CONSISTS OF 2 NEW BEDROOMS & 2 NEW BATHROOMS WITH DEN.
REMOVE GARAGE DOOR AND BLOCK UP WITH WINDOW AT FRONT AS SHOWN ON A-1.
RELOCATE CERTAIN WINDOW & DOOR OPENINGS AND BLOCK UP OTHER WALL AREAS.
SEE FLOOR PLAN AND SECTIONS FOR NEW & EXIST. BLOCK WALLS & NEW TIE BEAMS.
PROVIDE NEW CONCRETE STARTER COLUMNS & CONC. BEAMS AS SHOWN ON PLAN.
WITH NEW WINDOWS/DOORS, & VERTICAL REBAR TIE COLUMNS AT NEW WALLS.
SEE PLAN FOR ALL NEW AND EXISTING CONDITIONS BEING ALTERED AND OR MODIFIED.
SEE MECHANICAL WORK AS PART OF THIS PERMIT.
SEE ELECTRICAL WORK AS PART OF THIS PERMIT.
SEE PLUMBING WORK AS PART OF THIS PERMIT.

NOTE: THE ARCHITECT OR ENGINEER OF RECORD IS NOT RESPONSIBLE FOR ANY UNEXPECTED OR UNFORESEEN OR HIDDEN EXISTING CONDITIONS THAT HAVE NOTHING TO DO WITH THE PROPOSED WORK. THESE ISSUES IF ANY WILL BE ADDRESSED SEPARATELY, AND ADDED TO THE SCOPE OF WORK.

NOTE: TRADE CONTRACTOR IS RESPONSIBLE FOR ANY COST EFFECTIVE REVISIONS TO PLANS IF ORIGINAL DESIGN OF APPROVED PLANS ARE NOT FOLLOWED. A DIFFERENT METHOD IN DESIGN MAY BE USED AFTER CONSTRUCTION & PERMIT DOCUMENTS ARE ACTIVE IN FIELD, BUT AGAIN TRADE CONTRACTOR WILL BE RESPONSIBLE FOR ANY INCURRED COSTS DUE TO ANY REQUIRED REVISION WORK ON THE ORIGINAL APPROVED PLANS. ANY AND ALL CHANGES TO PLANS MUST BE APPROVED BY THE ENGINEER OR ARCHITECT OF RECORD & BUILDING DEPT. AND WILL BE BILLED ACCORDINGLY.

LEGAL DESCRIPTION: FOLIO#=05-3118-016-1590

SELY 1/2 LOTS 1 & 2, BLOCK 58, OF "CINEMA PARK-COUNTRY CLUB ESTS ADDITION" PLAT BOOK 17, PAGE 2 AS RECORDED 13114-2660 1. OF THE PUBLIC RECORDS OF MIAMI DADE COUNTY.

CALL 48 HOURS BEFORE YOU DIG IN FLORIDA
IT'S THE LAW
1-800-432-4770
SUNSHINE STATE ONE CALL OF FLORIDA, INC.

ENVIRONMENTAL RESOURCES & LANDSCAPING TREES NOTES:

NOTE: (1) FRUIT TREE WILL BE REMOVED DURING CONSTRUCTION.
NOTE: FOR ANYOTHER NEARBY TREES THAT MAY BE AFFECTED BY THE NEW CONSTRUCTION PROTECT EXIST. TREES PROVIDE 10'-12' BARRIES AROUND TREES TO REMAIN WITH A TEMPORARY PLYWD. PARTITIONS OR SAFETY MESH ALL DAMAGED PLANT MATERIAL INCLUDING SOD MUST BE RESTORED PRIOR TO FINAL BUILDING INSPECTION.
ALL OTHER EXISTING SHRUBS & HEDGES INCLUDING SOD TO REMAIN AS IS.

DESIGN CRITERIA

CODE EDITION: 2020-7th EDITION FLORIDA BUILDING CODE
AS PER CODE REFERENCE STANDARDS CHAPTER 35
CODE REFERENCES: ASCE/SEI 7-16, ACI 318-14, NDS 2018,AWC AF & PA-92, ASTM A615, ASTM D-698, & AITC, AISI S100-16,
MECHANICAL 2020-7th EDITION FLORIDA BUILDING CODE
ELECTRICAL 2020-7th EDITION FLORIDA BUILDING CODE
PLUMBING 2020-7th EDITION FLORIDA BUILDING CODE
NATIONAL ELECTRIC CODE (NEC 2017)
EXISTING BUILDINGS 2020-7th EDITION FLORIDA BUILDING CODE
FLORIDA FIRE PREVENTION CODE 2020 7th Edition
FLORIDA ACCESSIBILITY CODE 2020 7th Edition
ASCE/SEI 7-16 EXPOSURE CONDITION INDICATED=C
CONSTRUCTION TYPE VB UNPROTECTED
OCCUPANCY CLASSIFICATION R-3
ALTERATION LEVEL-3

I CERTIFY THIS IS BEING DESIGNED TO WITHSTAND 175 MPH WIND SPEED ACCORDING TO ASCE 7-16 AS REQUIRED BY THE FLORIDA BUILDING CODE REVISED 2020 EDITION 7th EDITION

ZONING LEGEND

ZONING CLASSIFICATION	SINGLE FAMILY RESIDENTIAL (RS-1C) DISTRICT
TOTAL GROSS LOT AREA:	12500 SQFT.
NET LOT AREA :	7500 SQFT.
LOT COVERAGE REQUIRED:	35%
LOT COVERAGE PROVIDED	32%
other conc. impervious areas 850 S.F. GREEN AREA TO REMAIN 4215 51%	
EXIST. BUILD'G. FT. PRINT	1,718 SQFT.
NEW ADDITIONAL S.F.	+ 189 SQFT.
EXIST. BEING REMOVED/REMODELED	- 404 SQFT.
TOTAL NEW UNDER A/C AREA S.F.	1,907 SQFT. A/C
NEW OPEN TERRACE S.F.	+ 461 SQFT.
(NEW TOTAL FT. PRINT S.F.)=	2,374 SQFT.

3 PARKING SPACES REQUIRED.
EXIST. CONC. DRIVEWAY FOR 4 CARS AT FRONT YARD.

SETBACKS REQUIRED:	
FRONT	30.00'
INTERIOR SIDE	7.50'
STREET SIDE	15.00'
REAR	25.00'
BETWEEN BUILDINGS	20.00'

SETBACKS PROVIDED:	
FRONT	15.09' EXIST. CONDITION APPV'D.
INTERIOR SIDE	7.67' PROPOSED
STREET SIDE	35.36' EXIST. CONDITION APPV'D.
REAR	13.86' MATCH EXIST. CONDITION APPV'D.
BETWEEN BUILDINGS	N/A

INDEX OF DRAWINGS

SP-1/D-1 SITE PLAN AND EXIST. & DEMO FLOOR PLAN
A-1 PROPOSED FLOOR PLANS, SCHED. & DETS.
A-2 FOUNDATIONS & STRUCTURAL SECTIONS/DETAILS
A-3 WINDOW SCHEDULES & DETAILS
A-4 PROPOSED ELEVATIONS
A-5 ROOF PLAN & STRUCTURAL DETAILS
A-6 ROOF DIAGRAM & OTHER DETAILS, NOTES.
M-1 MECHANICAL SHEET AND SCHEDULES, DETAILS
E-1 ELECTRICAL SHEET AND SCHEDULES, RISERS
P-1 PLUMBING SHEET AND DETAILS.
P-2 PLUMBING SHEET AND DETAILS.

OFFICE COPY
CITY OF MIAMI SPRINGS

SEPARATE PERMIT REQUIRED FOR ROOFING, PLUMBING ELECTRICAL, MECHANICAL, SHUTTERS, WINDOWS, DOORS AND DRIVEWAYS

CITY OF MIAMI SPRINGS APPROVED FOR PERMIT ONLY

NO.	DATE
1	
2	
3	
4	

DESG	DRWN	CHKD	APPV	DATE

PROJECT NAME: ADDITION TO RESIDENCE FOR:
OWNER/PH: AMBAR PREVAL 786-587-7391
ADDRESS:200 N. ESPLANADE DRIVE MIAMI SPRINGS, FLORIDA 33166
PROJECT ADD: SAME

Guillermo Ramon Gonzalez
9000 SW. 168th Avenue Miami Florida 33196
Registered Architect #13960
Ph:305-484-8171
Ph:786-237-5154 (assistant)

Guillermo Ramon Gonzalez
R.A. 13960
STATE OF FLORIDA

101521

SP-1
D-1

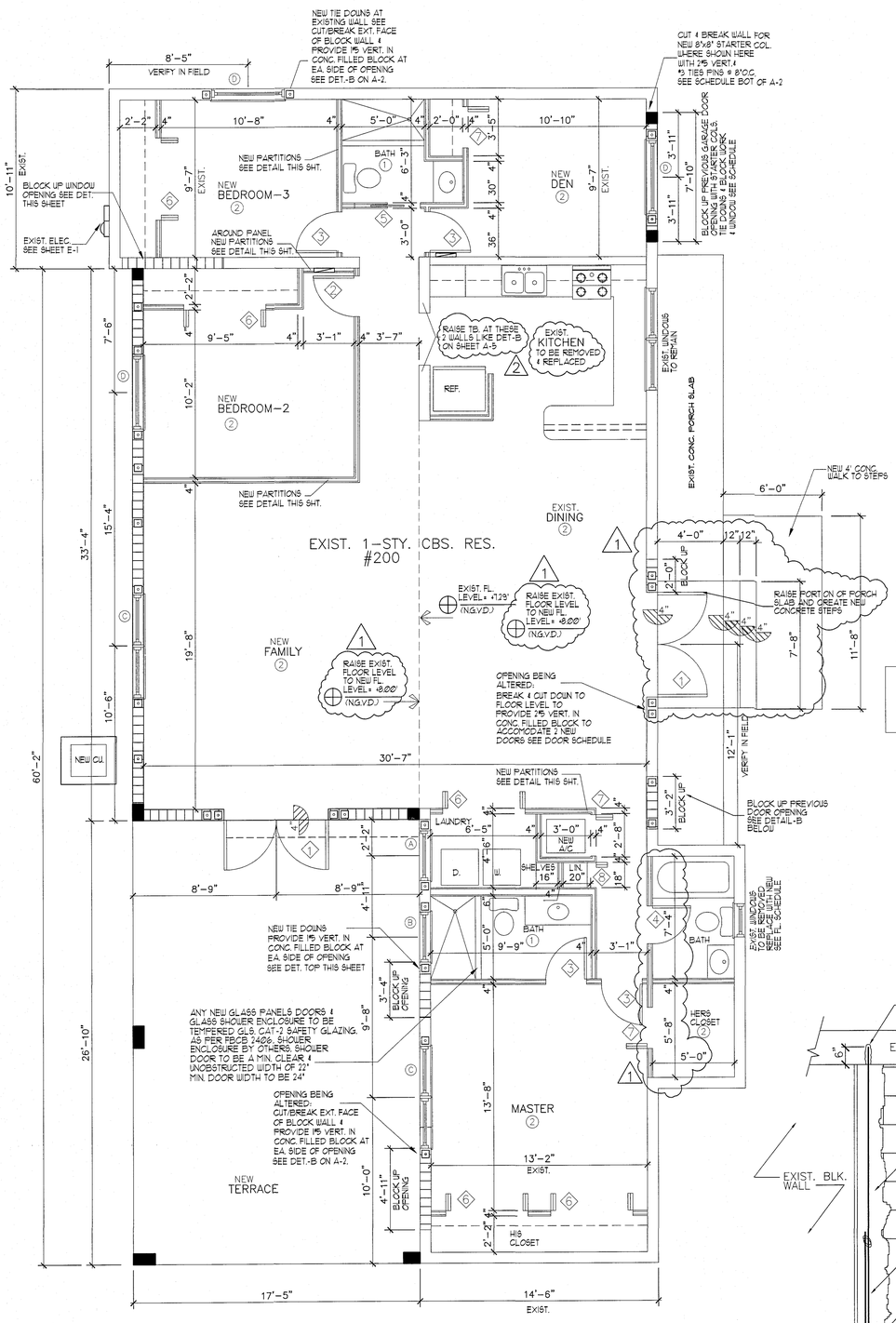

PROPOSED FLOOR PLAN

SCALE:1/4"=1'-0"

WALL LEGEND

- EXIST. 8"BLOCK WALL TO REMAIN
- NEW 4" OR 8"PARTITION SEE FL.PL. (2x4 WOOD STUDS) OR (26ga METAL CHANNELS)
- EXIST. 4"PARTITION TO BE REMOVED OR CONC. BLK. WALL TO BE REMOVED
- NEW 8" CONC.BLOCK WALL SEE FL.PL.

FOR INTRUSSION NOTES SEE SHEET A-6

NOTE: THERE IS NO LEGALIZATION BEING DONE HERE. EXISTING REAR ADDITION IS BEING REMOVED (SEE D-1) ALSO EXISTING GARAGE AT LEFT FRONT OF RESIDENCE BEING CONVERTED TO LIVING AREA.

THE MODE OF OPERATION SHALL NOT REQUIRE A KEY, TOOL SPECIAL KNOWLEDGE OR EFFORT TO MAKE AVAILABLE THE REQUIRED CLEAR OPENING AND NO PART OF THE OPERATING MECHANISM SHALL BE PLACED HIGHER THAN 54" A.F.F. SIMILAR SPECS APPLY TO ROLLING WINDOW INSTALLATIONS. BELOW DETAIL REQUIREMENTS ALSO APPLIES TO CASEMENT OR SINGLE HUNG WINDOWS

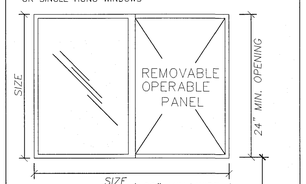

(MIN. AREA 5.7 S.F.)

DETAIL OF EGRESS WINDOW

SCALE:3/4"= 1'-0"

FLAME SPREAD INDEX NOTES:

MATERIAL INTERIOR FINISH: NOTE: GROUP R-3 CLASS-C
NOTE: ANY NEW WALL AND CEILING FINISHES INSTALLED, TO HAVE A FLAME SPREAD INDEX 76-200, AND A SMOKE DEVELOPED INDEX OF 0-450 AS PER F.B.C. '17 803.1.1 INTERIOR WALLS & CEILING MATERIALS

NOTE: IF ANY NEW DECORATIVE OR TRIM MATERIALS ARE INSTALLED, THEN TO HAVE A MIN. OF CLASS C FLAME SPREAD INDEX AS ABOVE ALL NEW TILE FLOORING IN BATHROOMS TO COMPLY WITH 804.1 TO 804.4.2 & IN ACCORDANCE NFPA 253 CHAPTER 8 INTERIOR FINISHES

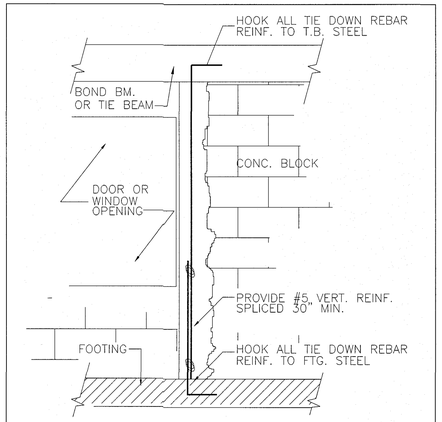

TIE DOWN/COLUMN SPLICE DETAIL (TYPICAL)

AT NEW WALLS SCALE: 3/4" = 1'-0"

BATHS ONLY IF APPLICABLE

NOTE: USE THE FOLLOWING ASSEMBLY AROUND BATH TUB AND SHOWERS.

1/2" "DUROCK" CEMENT BOARD FULL HEIGHT AT SHOWER TILE WALL AREAS

USE TILE @ BASE AND FLOOR

SEE NOTES AT BOTTOM OF ROOM FINISH SCHEDULE BELOW FOR WET WALL CONDITIONS

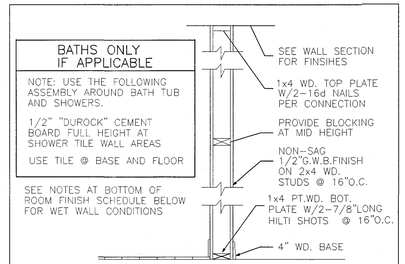

INTERIOR PARTITION DETAIL

SCALE:3/4"= 1'-0"

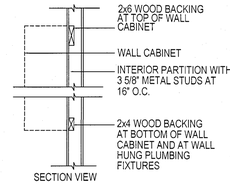

SECTION VIEW

WOOD BACKING DETAIL

SCALE:N.T.S.

- STEEL STUDS SHALL BE A MIN. OF 20 GA. AT WALL HUNG FIXTURE LOCATIONS TO COMPLY W/ 2510.5.1.1 F.B.C. & W/ 2318.1.15 F.B.C.
- A MINIMUM 2x4 HORIZONTAL WOOD MEMBER SECURELY FASTENED TO NOT LESS THAN 2 SUCH STUDS, SHALL BE INSTALLED FOR THE ATTACHMENT OF EACH WALL HUNG PLUMBING FIXTURE, WALL CABINET AND TO ALLOW FUTURE INSTALLATION OF GRAB BARS BEHIND TOILET AND TUB SIDES.

NOTE: WALL HUNG PLUMBING FIXTURES /CABINETS: STEEL STUD FRAMING SUPPORTING WALLS HUNG PLUMBING FIXTURES OR CABINETS SHALL BE DOUBLED PER R4411.4.5.1 & SHALL HAVE A HORZ. MEMBER SECURED TO NOT LESS THAN TWO STUDS AS PER R4411.4.51.3 FBC.

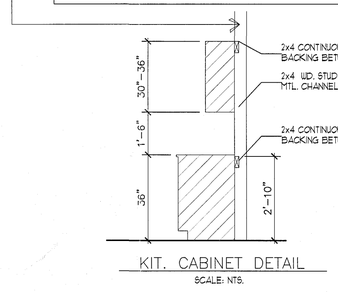

KIT. CABINET DETAIL

SCALE: NTS.

I CERTIFY THIS ADDITION TO BE DESIGNED TO WITHSTAND 175 MPH WIND SPEED ACCORDING TO ASCE 7-10 AS REQUIRED BY THE FLORIDA BUILDING CODE REVISED 2020-7th EDITION

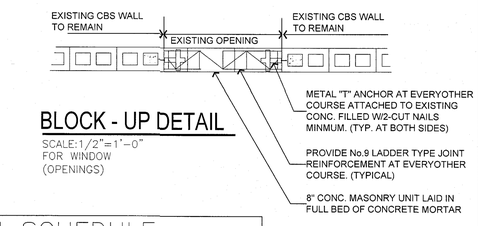

BLOCK - UP DETAIL

SCALE:1/2"=1'-0" FOR WINDOW (OPENINGS)

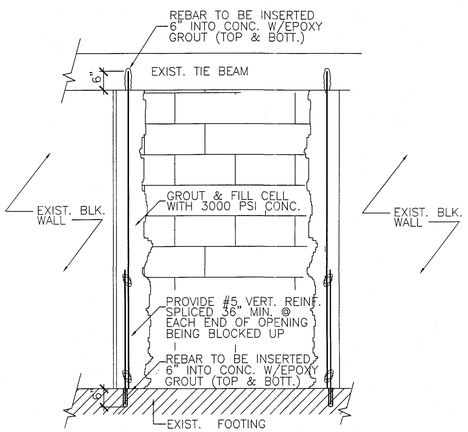

(B) REINF. BLOCK UP DETAIL

SCALE: 3/4" = 1'-0"

ROOM FINISH SCHEDULE

NO.	ROOM NAME	FLOOR	BASE	WALL	CEILING MAT.	CEILING HT.	REMARKS
1	BATHS	TILE	TILE	TILE	O.B. PAINT	8'-2"	FLOOR & BASE IMPERVIOUS
2	ANY OTHER LIVING AREA	TILE	TILE	G.W.B.	W.B. PAINT	8'-2"	
3							

NOTE: OWNER/G.C. TO VERIFY ALL NEW & EXIST. WINDOWS/DOOR SIZES TO BE REMOVED & REPLACED.

DOOR SCHEDULE

GLASS PANELS IN ANY DOORS TO BE TEMPERED GLS. CAT-2 SAFETY GLAZING TO COMPLY WITH 3508.3(D)(3) & 2411.3.1.3 & 2405.2.1 (1) & (2) "FBC"

MARK	TYPE	SIZE W	SIZE H	SIZE T	DESCRIPTION	MATERIAL	FRAME	REMARKS
1		(2)-36"	6'-8"	1 3/8"	FRENCH DOORS	METAL	METAL	ALUM. & GLS. FRENCH DOORS TEMPERED GLS. CAT-2 SEE N.O.A. & PRODUCT APPROVAL IMPACT RESISTANT FRONT DOOR TO BE FROSTED SMOKED/FROST DOOR WITH THRESHOLD
2		32"	6'-8"	1 3/8"	HOLLOW CORE SWING DOOR	WOOD	WOOD	
3		30"	6'-8"	1 3/8"	HOLLOW CORE SWING DOOR	WOOD	WOOD	
4		24"	6'-8"	1 3/8"	HOLLOW CORE SWING DOOR	WOOD	WOOD	
5		30"	6'-8"	1"	POCKET DOOR	WOOD	WOOD	
6		2-30"	6'-8"	1"	BI-FOLD LOUVERED	WOOD	WOOD	LOUVERED (OPTIONAL)
7		30"	6'-8"	1"	BI-FOLD LOUVERED	WOOD	WOOD	LOUVERED (OPTIONAL)
8		18"	6'-8"	1"	BI-FOLD LOUVERED	WOOD	WOOD	LOUVERED (OPTIONAL) OR SWING DOOR
9								

ALL NEW EXTERIOR DOORS TO BE IMPACT RESISTANT
EVERY CLOSET DOOR LATH SHALL BE SUCH THAT CHILDEN CAN OPEN FROM INSIDE CLOSET.
EVERY BATHROOM DOOR SHALL PERMIT THE OPENING OF THE LOCKED DOOR FROM THE OUTSIDE IN AN EMERGENCY. AS PER FBC 420.3.11.2

2 GLS. DRS. U VALUE 1.20 GLS. DRS. shgc U VALUE 0.45

CITY OF MIAMI SPRINGS BUILDING DEPARTMENT
APR 12 2022
REWORK
RECEIVED

CITY OF MIAMI SPRINGS
APPROVED
FOR PERMIT ONLY
BUILDING INSPECTOR
PLUMBING INSPECTOR
ELECTRICAL INSPECTOR
MECHANICAL INSPECTOR
ZONING
STRUCTURAL

NO.	DATE
1	1-14-22 REVISED TO RAISE EXIST FL. LEVEL TO 8.0
2	3-23-22 REVISED TO COMPLY WITH CITY COMMENTS
3	

PROJECT NAME: ADDITION TO RESIDENCE FOR:
OWNER/PH: AMBAR PREVAL 786-587-7391
ADDRESS: 200 N. ESPLANADE DRIVE MIAMI SPRINGS, FLORIDA 33166
PROJECT ADD: SAME

Guillermo Ramon Gonzalez
9000 SW. 168th Avenue Miami Florida 33196 Ph:305-484-8171
Registered Architect #13960 Ph:786-237-5154 (assistant)

Guillermo Ramon Gonzalez
R.A. 13960
STATE OF FLORIDA

101521

A-1

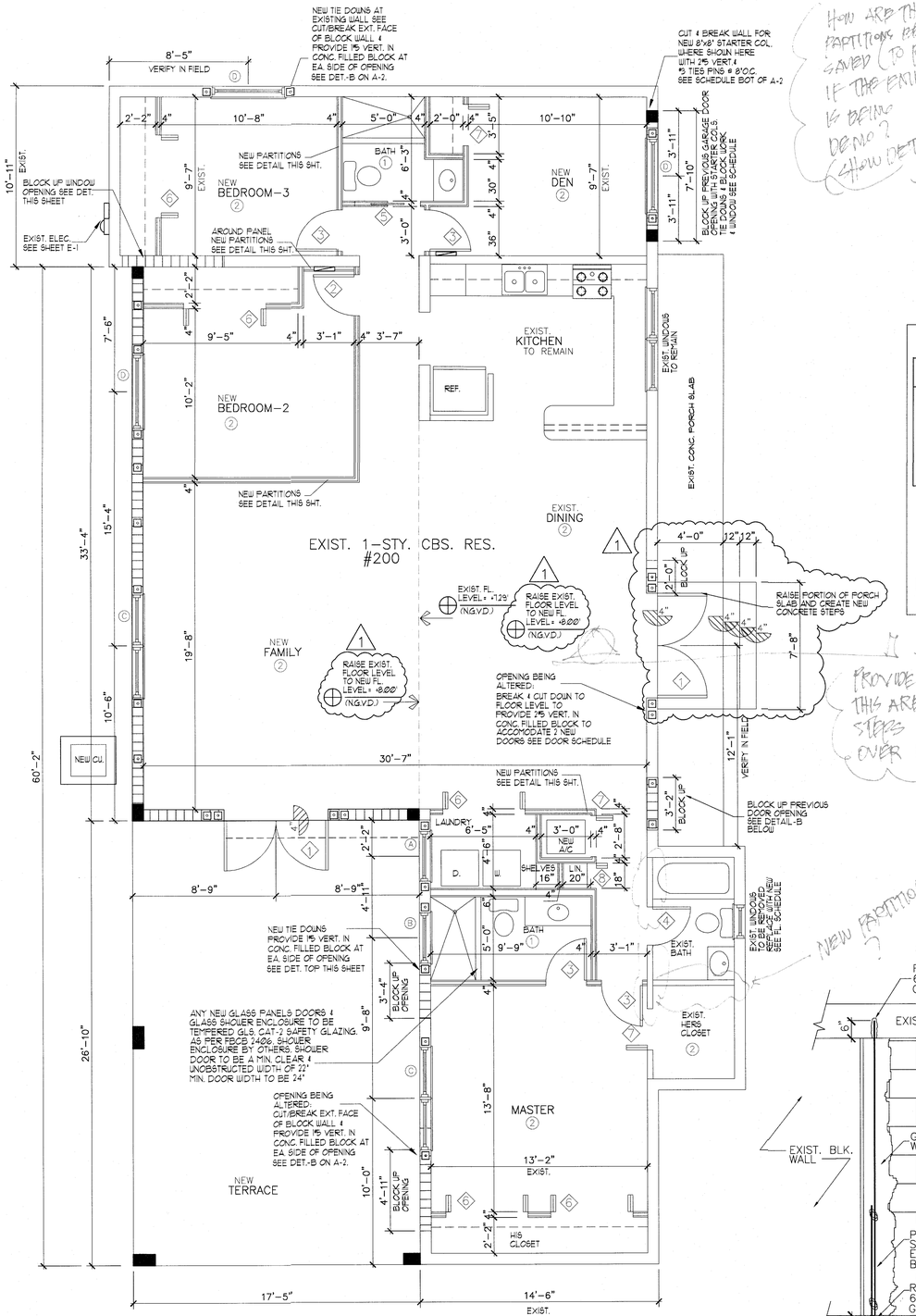

PROPOSED FLOOR PLAN

NEW AC AREA 1907 S.F.

SCALE: 1/4"=1'-0"

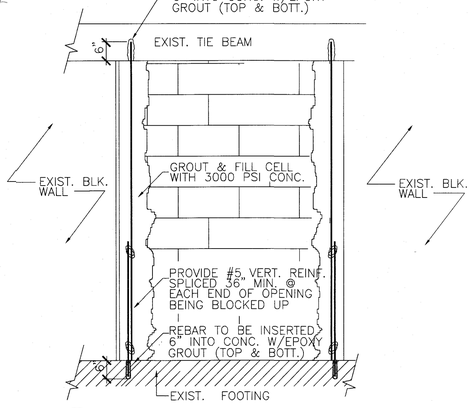

B REINF. BLOCK UP DETAIL

SCALE: 3/4" = 1'-0"

How are these partitions being saved (to remain) if the entire roof is being demo? Show detail

Provide section thru this area to show conc. steps and new header over new door.

Note: Provide detail to show how existing conc. headers are being addressed.

WALL LEGEND

- EXIST. 8"BLOCK WALL TO REMAIN
- NEW 4" OR 8"PARTITION SEE FL.PL. (2x4 WOOD STUDS) OR (25ga VERT. CHANNELS)
- EXIST. 4"PARTITION TO REMAIN
- EXIST. 4"PARTITION TO BE REMOVED OR CONC. BLK. WALL TO BE REMOVED
- NEW 8" CONC. BLOCK WALL SEE FL./PL.

FOR INTRUSSION NOTES SEE SHEET A-6

NOTE: THERE IS NO LEGALIZATION BEING DONE HERE. EXISTING REAR ADDITION IS BEING REMOVED (SEE D-1) ALSO EXISTING GARAGE AT LEFT FRONT OF RESIDENCE BEING CONVERTED TO LIVING AREA.

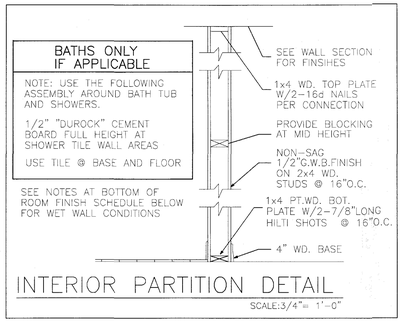

INTERIOR PARTITION DETAIL

SCALE:3/4"= 1'-0"

THE MODE OF OPERATION SHALL NOT REQUIRE A KEY, TOOL SPECIAL KNOWLEDGE OR EFFORT TO MAKE AVAILABLE THE REQUIRED CLEAR OPENING AND NO PART OF THE OPERATING MECHANISM SHALL BE PLACED HIGHER THAN 54" A.F.F. SIMILAR SPECS APPLY TO ROLLING WINDOW INSTALLATIONS. BELOW DETAIL REQUIREMENTS ALSO APPLIES TO CASEMENT OR SINGLE HUNG WINDOWS

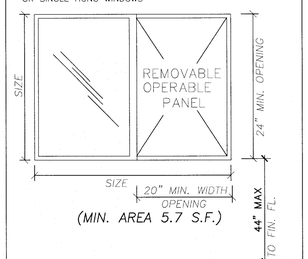

DETAIL OF EGRESS WINDOW

SCALE:3/4"= 1'-0"

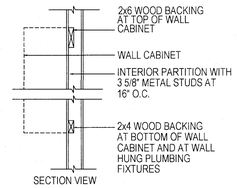

WOOD BACKING DETAIL

SCALE:N.T.S.

- STEEL STUDS SHALL BE A MIN. OF 20 GA. AT WALL HUNG FIXTURE LOCATIONS TO COMPLY W/ 2510.5.1.1 F.B.C. & W/ 2318.1.15 F.B.C.

- A MINIMUM 2x4 HORIZONTAL WOOD MEMBER SECURELY FASTENED TO NOT LESS THAN 2 SUCH STUDS, SHALL BE INSTALLED FOR THE ATTACHMENT OF EACH WALL HUNG PLUMBING FIXTURE, WALL CABINET AND TO ALLOW FUTURE INSTALLATION OF GRAB BARS BEHIND TOILET AND TUB SIDES.

FLAME SPREAD INDEX NOTES:

MATERIAL INTERIOR FINISH: NOTE: GROUP R-3 CLASS-C
NOTE: ANY NEW WALL AND CEILING FINISHES INSTALLED, TO HAVE A FLAME SPREAD INDEX 76-200, AND A SMOKE DEVELOPED INDEX OF 0-450 AS PER F.B.C. '17 803.1.1 INTERIOR WALLS & CEILING MATERIALS

NOTE: IF ANY NEW DECORATIVE OR TRIM MATERIALS ARE INSTALLED, THEN TO HAVE A MIN. OF CLASS C FLAME SPREAD INDEX AS ABOVE ALL NEW TILE FLOORING IN BATHROOMS TO COMPLY WITH 804.1 TO 804.4.2 & IN ACCORDANCE NFPA 253 CHAPTER 8 INTERIOR FINISHES

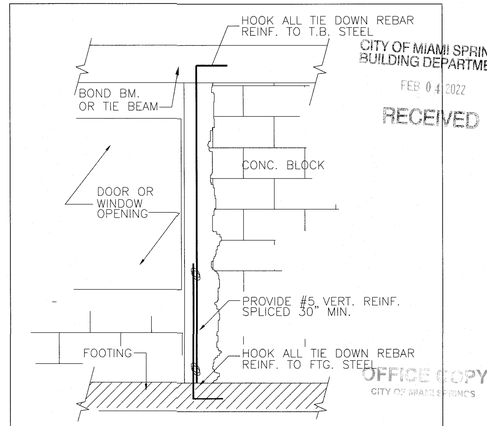

TIE DOWN/COLUMN SPLICE DETAIL (TYPICAL) AT NEW WALLS

SCALE: 3/4" = 1'-0"

CITY OF MIAMI SPRINGS BUILDING DEPARTMENT
FEB 04 2022
RECEIVED

I CERTIFY THIS ADDITION TO BE DESIGNED TO WITHSTAND 175 MPH WIND SPEED ACCORDING TO ASCE 7-10 AS REQUIRED BY THE FLORIDA BUILDING CODE REVISED 2020-7th EDITION

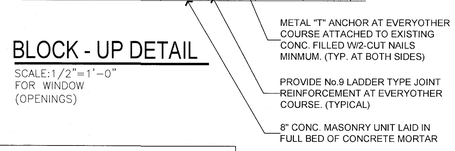

BLOCK - UP DETAIL

SCALE:1/2"=1'-0" FOR WINDOW (OPENINGS)

REWORK

ROOM FINISH SCHEDULE

NO.	ROOM NAME	FLOOR	BASE	WALL	CEILING MAT.	CEILING HT.	REMARKS
1	BATHS	TILE	TILE	TILE	O.B. PAINT	8'-2"	FLOOR & BASE IMPERVIOUS
2	ANY OTHER LIVING AREA	TILE	TILE	G.W.B.	W.B. PAINT	8'-2"	
3							

NOTE: OWNER/G.C. TO VERIFY ALL NEW & EXIST. WINDOWS/DOOR SIZES TO BE REMOVED & REPLACED

DOOR SCHEDULE

GLASS PANELS IN ANY DOORS TO BE TEMPERED GLS. CAT-2 SAFETY GLAZING TO COMPLY WITH 3508.3(D)(3) & 2411.3.1.3 & 2405.2.1 (1) & (2) "FBC"

MARK	TYPE	SIZE W	SIZE H	SIZE T	DESCRIPTION	MATERIAL	FRAME	REMARKS
1		(2)-36"	6'-8"	1 3/8"	FRENCH DOORS	METAL	METAL	ALUM. & GLS. FRENCH DOORS TEMPERED GLS. CAT-2 SEE N.O.A. & PRODUCT APPROVAL IMPACT RESISTANT FRONT DOOR TO BE FROSTED SMOKED/FROST DOOR WITH THRESHOLD
2		32"	6'-8"	1 3/8"	HOLLOW CORE SWING DOOR	WOOD		
3		30"	6'-8"	1 3/8"	HOLLOW CORE SWING DOOR	WOOD	WOOD	
4		24"	6'-8"	1 3/8"	HOLLOW CORE SWING DOOR	WOOD	WOOD	
5		30"	6'-8"	1"	POCKET DOOR	WOOD	WOOD	
6		2-30"	6'-8"	1"	BI-FOLD LOUVERED	WOOD	WOOD	LOUVERED (OPTIONAL)
7		30"	6'-8"	1"	BI-FOLD LOUVERED	WOOD	WOOD	LOUVERED (OPTIONAL)
8		18"	6'-8"	1"	BI-FOLD LOUVERED	WOOD	WOOD	LOUVERED (OPTIONAL) OR SWING DOOR
9								

ALL NEW EXTERIOR DOORS TO BE IMPACT RESISTANT
EVERY CLOSET DOOR LATH SHALL BE SUCH THAT CHILDEN CAN OPEN FROM INSIDE CLOSET.
EVERY BATHROOM DOOR SHALL PERMIT THE OPENING OF THE LOCKED DOOR FROM THE OUTSIDE IN AN EMERGENCY. AS PER FBC 420.3.11.2

SHGC & U-FACTOR VALUES MISSING FOR GLASS DOORS.

CITY OF MIAMI SPRINGS APPROVED FOR PERMIT ONLY

OFFICE COPY CITY OF MIAMI SPRINGS

PROJECT NAME: ADDITION TO RESIDENCE FOR:
OWNER/PH: AMBAR PREVAL 786-587-7391
ADDRESS: 200 N. ESPLANADE DRIVE MIAMI SPRINGS, FLORIDA 33166
PROJECT ADD: SAME

NO.	DATE
1	1-14-22 REVISED TO RAISE EXIST. FL. LEVEL TO 8.0
2	
3	
4	

DSGN	DRWN	CHKD	APRV	DATE

Guillermo Ramon Gonzalez
9000 SW. 168th Avenue Miami Florida 33196 Ph:305-484-8171
Registered Architect #13960 Ph:786-237-5154 (assistant)

STATE OF FLORIDA — GUILLERMO RAMON GONZALEZ — AR0013960 — REGISTERED ARCHITECT

Guillermo Ramon Gonzalez
R.A. 13960
STATE OF FLORIDA

101521

A-1

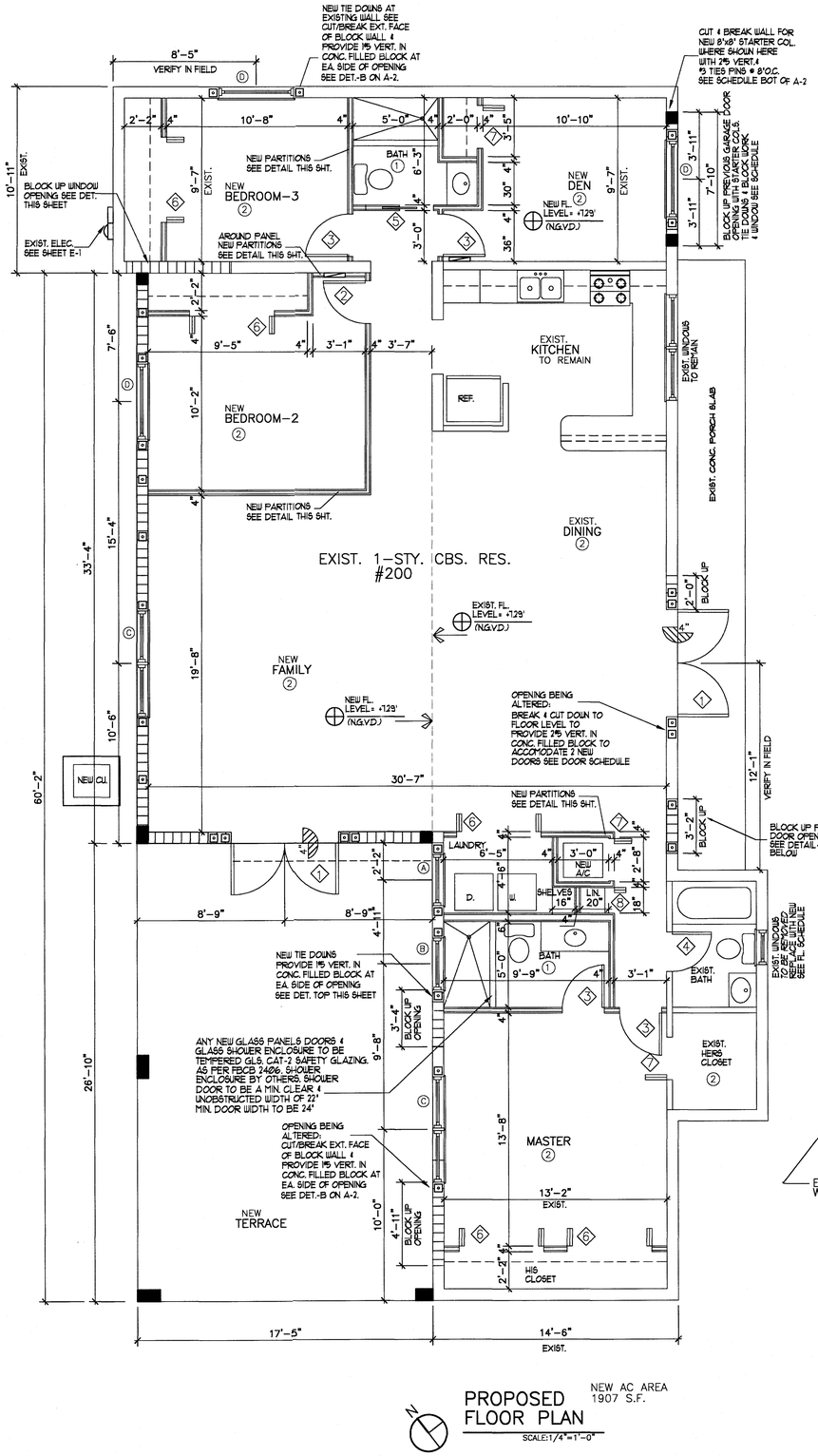

PROPOSED FLOOR PLAN

NEW AC AREA 1907 S.F.

SCALE:1/4"=1'-0"

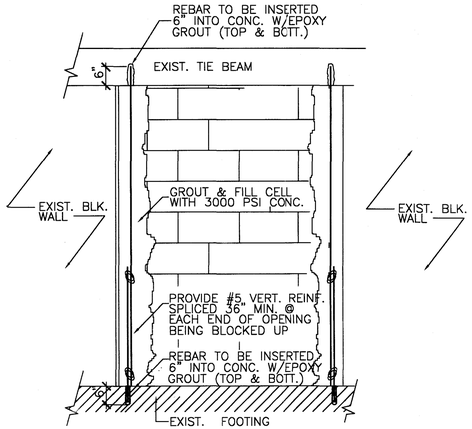

(B) REINF. BLOCK UP DETAIL

SCALE: 3/4" = 1'-0"

WALL LEGEND

- EXIST. 8"BLOCK WALL TO REMAIN
- NEW 4" OR 8"PARTITION SEE FL.PL. (2x4 WOOD STUDS) OR (26ga METAL CHANNELS)
- EXIST.4"PARTITION TO REMAIN
- EXIST. 4"PARTITION TO BE REMOVED OR CONC. BLK. WALL TO BE REMOVED
- NEW 8" CONC.BLOCK WALL SEE FL.PL.

FOR INTRUSSION NOTES SEE SHEET A-6

NOTE: THERE IS NO LEGALIZATION BEING DONE HERE. EXISTING REAR ADDITION IS BEING REMOVED (SEE D-1) ALSO EXISTING GARAGE AT LEFT FRONT OF RESIDENCE BEING CONVERTED TO LIVING AREA.

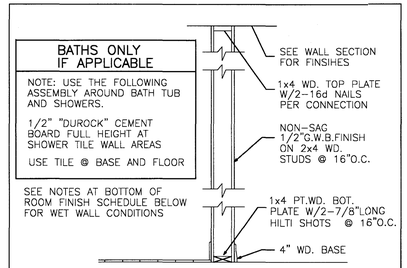

INTERIOR PARTITION DETAIL

SCALE:3/4"= 1'-0"

THE MODE OF OPERATION SHALL NOT REQUIRE A KEY, TOOL SPECIAL KNOWLEDGE OR EFFORT TO MAKE AVAILABLE THE REQUIRED CLEAR OPENING AND NO PART OF THE OPERATING MECHANISM SHALL BE PLACED HIGHER THAN 54" A.F.F. SIMILAR SPECS APPLY TO ROLLING WINDOW INSTALLATIONS. BELOW DETAIL REQUIREMENTS ALSO APPLIES TO CASEMENT OR SINGLE HUNG WINDOWS

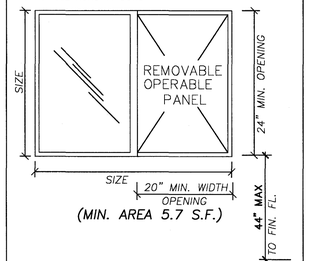

DETAIL OF EGRESS WINDOW

SCALE:3/4"= 1'-0"

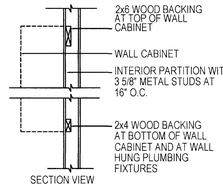

WOOD BACKING DETAIL

SCALE:N.T.S.

- STEEL STUDS SHALL BE A MIN. OF 20 GA. AT WALL HUNG FIXTURE LOCATIONS TO COMPLY W/ 2510.5.1.1 F.B.C. & W/ 2318.1.15 F.B.C.
- A MINIMUM 2x4 HORIZONTAL WOOD MEMBER SECURELY FASTENED TO NOT LESS THAN 2 SUCH STUDS, SHALL BE INSTALLED FOR THE ATTACHMENT OF EACH WALL HUNG PLUMBING FIXTURE, WALL CABINET AND TO ALLOW FUTURE INSTALLATION OF GRAB BARS BEHIND TOILET AND TUB SIDES.

FLAME SPREAD INDEX NOTES:

MATERIAL INTERIOR FINISH: NOTE: GROUP R-3 CLASS-C
NOTE: ANY NEW WALL AND CEILING FINISHES INSTALLED, TO HAVE A FLAME SPREAD INDEX 76-200, AND A SMOKE DEVELOPED INDEX OF 0-450 AS PER F.B.C. '17 803.1.1 INTERIOR WALLS & CEILING MATERIALS

NOTE: IF ANY NEW DECORATIVE OR TRIM MATERIALS ARE INSTALLED, THEN TO HAVE A MIN. OF CLASS C FLAME SPREAD INDEX AS ABOVE ALL NEW TILE FLOORING IN BATHROOMS TO COMPLY WITH 804.1 TO 804.4.2 & IN ACCORDANCE NFPA 253 CHAPTER 8 INTERIOR FINISHES

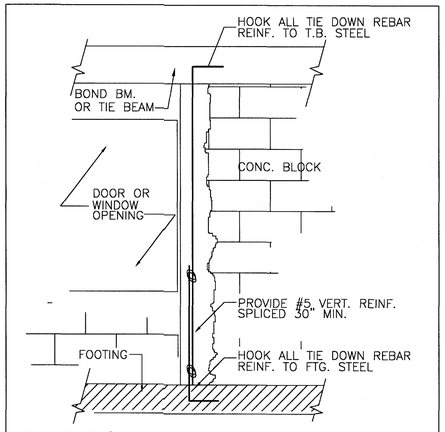

TIE DOWN/COLUMN SPLICE DETAIL (TYPICAL) AT NEW WALLS

SCALE: 3/4" = 1'-0"

I CERTIFY THIS ADDITION TO BE DESIGNED TO WITHSTAND 175 MPH WIND SPEED ACCORDING TO ASCE 7-10 AS REQUIRED BY THE FLORIDA BUILDING CODE REVISED 2020-7th EDITION

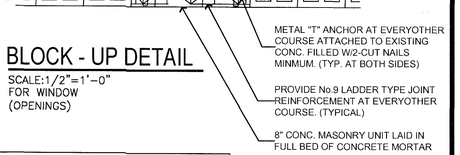

BLOCK - UP DETAIL

SCALE:1/2"=1'-0"
FOR WINDOW (OPENINGS)

ROOM FINISH SCHEDULE

NO.	ROOM NAME	FLOOR	BASE	WALL	CEILING MAT.	CEILING HT.	REMARKS
1	BATHS	TILE	TILE	TILE	O.B. PAINT	8'-2"	FLOOR & BASE IMPERVIOUS
2	ANY OTHER LIVING AREA	TILE	TILE	G.W.B.	W.B. PAINT	8'-2"	
3							

NOTE: OWNER/G.C. TO VERIFY ALL NEW & EXIST. WINDOWS/DOOR SIZES TO BE REMOVED & REPLACED.

DOOR SCHEDULE

GLASS PANELS IN ANY DOORS TO BE TEMPERED GLS. CAT-2 SAFETY GLAZING TO COMPLY WITH 3508.3.2(D)(3) & 2411.3.1.3 & 2405.2.1 (1) & (2) "FBC"

MARK	TYPE	SIZE W	SIZE H	SIZE T	DESCRIPTION	MATERIAL	FRAME	REMARKS
1		(2)-36"	6'-8"	1 3/8"	FRENCH DOORS	METAL	METAL	ALUM. & GLS. FRENCH DOORS TEMPERED GLS. CAT-2 SEE N.O.A. & PRODUCT APPROVAL
2		32"	6'-8"	1 3/8"	HOLLOW CORE SWING DOOR	WOOD		IMPACT RESISTANT FRONT DOOR TO BE FROSTED SMOKED/FROST DOOR WITH THRESHOLD
3		30"	6'-8"	1 3/8"	HOLLOW CORE SWING DOOR	WOOD	WOOD	
4		24"	6'-8"	1 3/8"	HOLLOW CORE SWING DOOR	WOOD	WOOD	
5		30"	6'-8"	1"	POCKET DOOR	WOOD	WOOD	
6		2-30"	6'-8"	1"	BI-FOLD LOUVERED	WOOD	WOOD	LOUVERED (OPTIONAL)
7		30"	6'-8"	1"	BI-FOLD LOUVERED	WOOD	WOOD	LOUVERED (OPTIONAL)
8		18"	6'-8"	1"	BI-FOLD LOUVERED	WOOD	WOOD	LOUVERED (OPTIONAL) OR SWING DOOR
9								

ALL NEW EXTERIOR DOORS TO BE IMPACT RESISTANT.
EVERY CLOSET DOOR LATH SHALL BE SUCH THAT CHILDEN CAN OPEN FROM INSIDE CLOSET.
EVERY BATHROOM DOOR SHALL PERMIT THE OPENING OF THE LOCKED DOOR FROM THE OUTSIDE IN AN EMERGENCY. AS PER FBC 420.3.11.2

CITY OF MIAMI SPRINGS APPROVED FOR PERMIT ONLY

STATE OF FLORIDA — GUILLERMO RAMON GONZALEZ — AR0013665 — REGISTERED ARCHITECT

Guillermo Ramon Gonzalez
R.A. 13960
STATE OF FLORIDA

NO.	DATE
1	
2	
3	
4	

DESG · DRWN · CHKD · APPV · DATE

PROJECT NAME: ADDITION TO RESIDENCE FOR:
OWNER/PH: AMBAR PREVAL 786-587-7391
ADDRESS:200 N. ESPLANADE DRIVE MIAMI SPRINGS, FLORIDA 33166
PROJECT ADD: SAME

Guillermo Ramon Gonzalez
9000 SW. 168th Avenue Miami Florida 33196
Registered Architect #13960
Ph:305-484-8171
Ph:786-237-1154 (assistant)

101521

A-1

GENERAL NOTES:

1. CONCRETE SHALL HAVE 3,000 PSI COMPRESSIVE STRENGTH AT 28 DAYS, UNLESS OTHERWISE NOTED (U.O.N.)
2. ALL REINFORCING STEEL SHALL BE DEFORMED BARS, AND SHALL HAVE A MINIMUM YIELD STRENGTH OF 60,000 PSI GRADE 60, AND MEET ASTM A-615 SPECS.
3. ALL STRUCTURAL STEEL SHALL HAVE A MINIMUM YIELD STRENGTH OF 36,000 PSI, AND MEET ASTM A-36 SPECS.
4. DROP TIE BEAM OVER DOORS EXTEND 8" PAST OPENING ON BOTH SIDES AND ADD 2-#5 BARS FOR EVERY ADDITIONAL 8" OF BEAM HEIGHT (2 ADDITIONAL BARS MIN.)

FOUNDATIONS

SOIL STATEMENT:

1. THE SOIL AT THIS SITE HAS BEEN OBSERVED BY THE ARCHITECT OR ENGINEER TO BE COMPOSED OF SAND AND ROCKS AND CAN BE CONSIDERED TO HAVE AN ALLOWABLE MINIMUM DESIGN BEARING CAPACITY OF 2,000 P.S.F. (SHOULD ANY OTHER CONDITIONS OR MATERIALS BE ENCOUNTERED IN THE PROCESS OF CONSTRUCTION THE ARCHITECT OR ENGINEER SHALL BE NOTIFIED BEFORE PROCEEDING WITH THE WORK).
   ALL BUILDINGS SHALL HAVE PRE-CONSTRUCTION TREATMENT PROTECTION AGAINST SUBTERRANEAN TERMITES AS PER F.B.C. 2020 7th EDITION. A CERTIFICATE OF COMPLIANCE SHALL BE ISSUED TO THE BUILDING DEPARTMENT BY THE LICENSED PEST CONTROL COMPANY THAT CONTAINS THE FOLLOWING STATEMENTS : " THE BUILDING HAS RECEIVED A COMPLETE TREATMENT FOR THE PREVENTION OF SUBTERRANEAN TERMITES. TREATMENT IS IN ACCORDANCE WITH THE RULES AND LAWS ESTABLISHED BY THE FLORIDA DEPARTMENT OF AGRICULTURE AND CONSUMER SERVICES ".
2. AT THE TIME OF CONSTRUCTION THE ARCHITECT OR ENGINEER SHALL SUBMIT TO THE BUILDING OFFICIAL A LETTER ATTESTING THAT THE SITE HAS BEEN OBSERVED AND THAT THE FOUNDATION CONDITIONS ARE SIMILAR TO THOSE UPON WHICH THE DESIGN IS BASED.
3. SOIL AT THE BUILDING AREA SHALL BE VIBRE-ROLLED TO A MIN. COMP ACTION OF 2,000 P.S.F. AND MODIFIED PROCTOR DENSITY.
4. CENTERLINE OF FOOTING IS CENTERLINE OF COLUMNS AND BEARING WALLS, UNLESS OTHER WISE NOTED (U.O.N.).
5. ELEVATION OF TOP OF FOOTING SHALL BE 1'- 0" BELOW THE FINISHED GRADE, U.O.N.
6. PROVIDE BEND DOWELS AT ALL COLUMNS AND VERTICAL REINFORCEMENT SAME SIZE AND QUANTITY AS REINFORCEMENT.

REINFORCING

1. MINIMUM CLEAR COVER FOR REBARS TO BE AS FOLLOWS:
   COLUMNS = 1-1/2" TO TIE FOOTINGS = 3" BEAMS = 1-1/2" TO TIE
   PEDESTAL = 2" TO TIE SLAB ON FILL = 2" FROM TOP SLABS = 3/4"
2. ALL REINFORCING SHALL BE HELD SECURELY IN POSITION WITH STANDARD ACCESSORIES
3. SPLICES IN CONTINUOS TOP REBARS SHALL BE MADE AT MID SPAN, SPLICES IN CONTINUOS BOTTOM REBARS SHALL BE OVER SUPPORT(S).
4. SPLICES IN REINFORCING, WHERE PERMITTED, SHALL BE AS FOLLOWS:
   COLUMN VERT.BARS = 30 BAR DIA. TEMPERATURE REBARS = 12" MIN.
   FOOTING DOWELS = 30 BAR DIA. + 8" WELDED WIRE MESH = 6"
   TENSION SPLICE = CLASS "C" ALL OTHERS = 30 BAR DIA.
5. PROVIDE 2 N°5 60" LONG BEND BARS AT CORNERS OF BEAMS.

SLAB

4" FIBER STEALTH CONCRETE SLAB 3000 PSI

1. ~~SLAB SHALL BE 2500 PSI CONCRETE (MIN.), 4" THICK, REINFORCED WITH 6"X 6" - 10/10 (GAUGE) WELDED WIRE MESH (W.W.M.);~~ ON WELL COMPACTED FILL.
2. FILL MATERIAL SHALL BE CLEAN SAND AND ROCK COMPACTED TO 95% OF MAXIMUM DENSITY IN LIFTS NOT TO EXCEED 12" IN DEPTH.
3. PLACE CONCRETE SLABS IN A CHECKERBOARD PATTERN, NO PANEL EXCEEDING 25 FEET OF LENGTH, OR 625 SF IN AREA, OR USE CONTROL JOINTS.
4. ELEVATION TOP OF CONCRETE SLAB SHOWN THUSLY; OR MATCH EXISTING ADJACENT FLOOR ELEVATION.
5. WALLS, COLUMNS, AND BEAMS, PENETRATING SLAB ON FILL, SHALL BE ISOLATED BY 1/2" PRE MOLDED JOINT FILLER, UNLESS OTHERWISE NOTED (U.O.N.).
6. SLABS SHALL BE PLACED OVER 1 LAYER OF PLASTIC MEMBRANE, SUCH AS 6 MIL VISQUEEN, OR SIMILAR.
7. SLABS ON FILL SHALL BE CURED CONTINUOUSLY FOR 5 DAYS.

MASONRY

1. CONCRETE MASONRY UNITS (CMU), OR "BLOCKS", SHALL CONFORM TO ASTM C-90 SPECS.
2. COMPRESSIVE STRENGTH OF MASONRY UNITS SHALL BE NOT LESS THAN FM=1500 PSI.
3. ALL BLOCK WALLS SHALL BE LAID IN A FULL BEDDING OF MORTAR, WITH A COMPLETE COVERAGE OF THE BLOCK'S FACE SHELL (HORIZONTALLY) AND MORTAR GROOVES (VERTICALLY). AND REINFORCED WITH #8 TRUSS TYPE JOINT REINFORCEMENT @ EVERY OTHER COURSE (16"O.C.VERTICALLY)
4. MORTAR TO BOND BLOCK MASONRY SHALL BE TYPE "M", 2,500 PSI.
5. THE FIRST BLOCK CELL ADJACENT TO ANY OPENING SHALL BE FILLED WITH CONCRETE.
6. THE FIRST BLOCK CELL ADJACENT TO ANY OPENING FROM 3'TO 8'SHALL BE REINFORCED WITH 1- #5 VERTICAL AND BE FILLED WITH 2500 PSI CONCRETE.

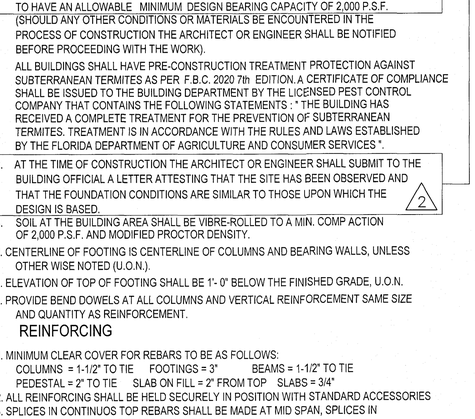

TYP. CONN. OF NEW FTG. TO EXIST'G
SCALE : 3/4" = 1'-0"

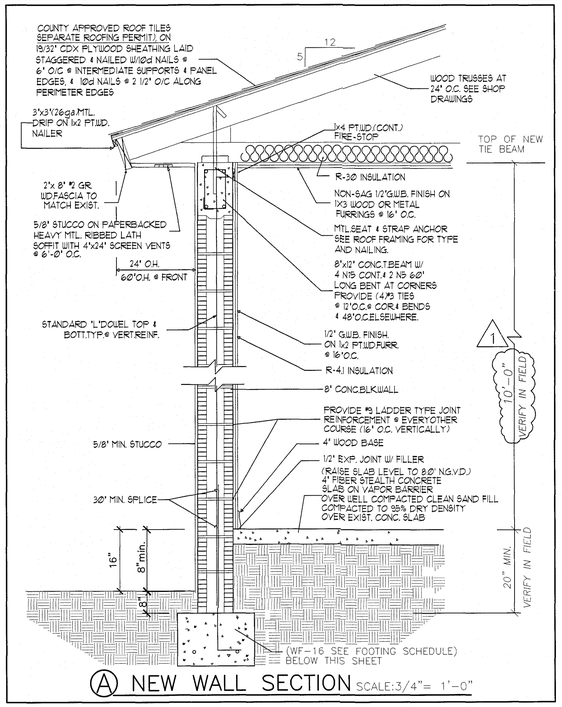

Ⓐ NEW WALL SECTION SCALE:3/4"= 1'-0"

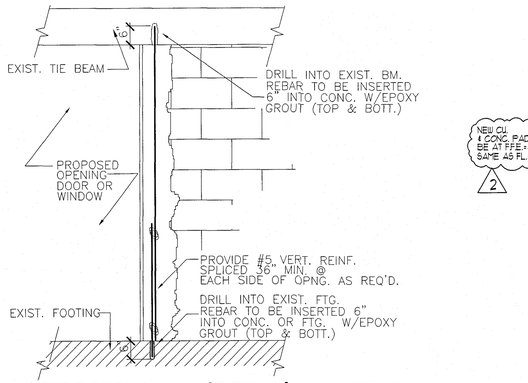

Ⓑ TIE DOWN DETAIL (TYPICAL) AT EXISTING WALL
SCALE: 3/4" = 1'-0"

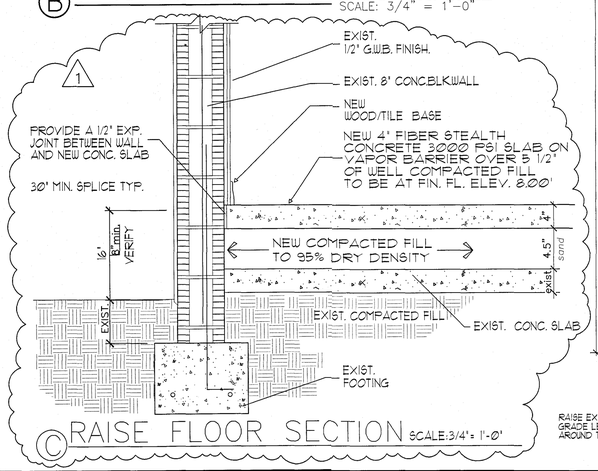

ⓒ RAISE FLOOR SECTION SCALE:3/4"= 1'-0"

FOOTING/COLUMN SCHEDULE

MARK	SIZE	DEPTH	ELEV TOP FTG	BOTT. REINFORCING A	BOTT. REINFORCING B	TOP REINFORCING C	TOP REINFORCING D	REMARKS
WF-16	16"	16"	+0'-8"	2 #5 CONT.				
C1	8"x 16"	CONCRETE COLUMNS WITH 4#5 VERT. & #3 TIES AT 8" O.C. VERT.						
C2	8"x 8"	CONCRETE STARTER COLUMNS WITH 2#5 VERT.						
C3	8"x 12"	CONCRETE COLUMNS	WITH 4#5 VERT. & #3 TIES AT 8" O.C. VERT.					
MF-4	48"x48"	20"	- 16"	5 #5	5#5	5#5	5#5	
MF-5	60"x60"	20"	- 16"	7 #5	7#5	7#5	7#5	

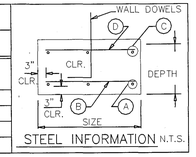

STEEL INFORMATION N.T.S.

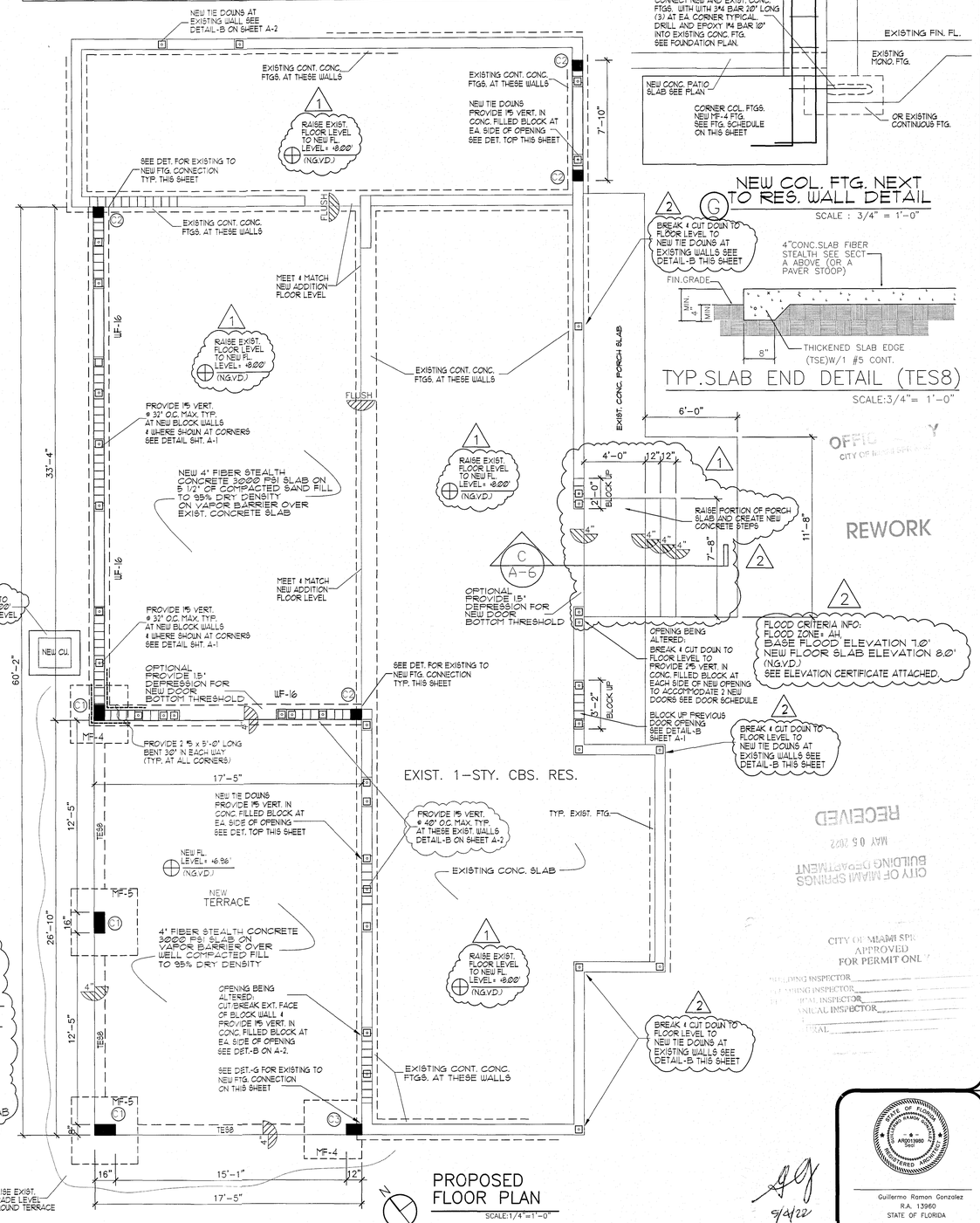

NEW COL. FTG. NEXT TO RES. WALL DETAIL
SCALE : 3/4" = 1'-0"

TYP.SLAB END DETAIL (TES8)
SCALE:3/4"= 1'-0"

PROPOSED FLOOR PLAN
SCALE:1/4"=1'-0"

OFFICIAL COPY
CITY OF MIAMI SPRINGS BUILDING DEPARTMENT
RECEIVED MAY 05 2022
CITY OF MIAMI SPRINGS APPROVED FOR PERMIT ONLY
BUILDING INSPECTOR
PLUMBING INSPECTOR
ELECTRICAL INSPECTOR
MECHANICAL INSPECTOR
FINAL

5/4/22

NO.	DATE
1	1-14-22 REVISED TO RAISE EXIST. FL. LEVEL TO 8.0'
2	3-22-22 REVISED TO SHOW NEW DETAILS.
3	
4	

PROJECT NAME: ADDITION TO RESIDENCE FOR:
OWNER/PH: AMBAR PREVAL 786-587-7391
ADDRESS:200 N. ESPLANADE DRIVE MIAMI SPRINGS, FLORIDA 33166
PROJECT ADD: SAME

Guillermo Ramon Gonzalez
9000 SW. 168th Avenue Miami Florida 33196 Ph:305-484-8171 Ph:786-237-5154 (assistant)
Registered Architect #13960

Guillermo Ramon Gonzalez
R.A. 13960
STATE OF FLORIDA

101521

A-2

GENERAL NOTES:

1. CONCRETE SHALL HAVE 3,000 PSI COMPRESSIVE STRENGTH AT 28 DAYS, UNLESS OTHERWISE NOTED (U.O.N.)
2. ALL REINFORCING STEEL SHALL BE DEFORMED BARS, AND SHALL HAVE A MINIMUM YIELD STRENGTH OF 60,000 PSI GRADE 60, AND MEET ASTM A-615 SPECS.
3. ALL STRUCTURAL STEEL SHALL HAVE A MINIMUM YIELD STRENGTH OF 36,000 PSI, AND MEET ASTM A-36 SPECS.
4. DROP TIE BEAM OVER DOORS EXTEND 8" PAST OPENING ON BOTH SIDES AND ADD 2-#5 BARS FOR EVERY ADDITIONAL 8" OF BEAM HEIGHT (2 ADDITIONAL BARS MIN.)

FOUNDATIONS

SOIL STATEMENT:

1. THE SOIL AT THIS SITE HAS BEEN OBSERVED BY THE ARCHITECT OR ENGINEER TO BE COMPOSED OF SAND AND ROCKS AND CAN BE CONSIDERED TO HAVE AN ALLOWABLE MINIMUM DESIGN BEARING CAPACITY OF 2,000 P.S.F. (SHOULD ANY OTHER CONDITIONS OR MATERIALS BE ENCOUNTERED IN THE PROCESS OF CONSTRUCTION THE ARCHITECT OR ENGINEER SHALL BE NOTIFIED BEFORE PROCEEDING WITH THE WORK).

   ALL BUILDINGS SHALL HAVE PRE-CONSTRUCTION TREATMENT PROTECTION AGAINST SUBTERRANEAN TERMITES AS PER F.B.C. 2020 7th EDITION.A CERTIFICATE OF COMPLIANCE SHALL BE ISSUED TO THE BUILDING DEPARTMENT BY THE LICENSED PEST CONTROL COMPANY THAT CONTAINS THE FOLLOWING STATEMENTS : " THE BUILDING HAS RECEIVED A COMPLETE TREATMENT FOR THE PREVENTION OF SUBTERRANEAN TERMITES. TREATMENT IS IN ACCORDANCE WITH THE RULES AND LAWS ESTABLISHED BY THE FLORIDA DEPARTMENT OF AGRICULTURE AND CONSUMER SERVICES ".
2. AT THE TIME OF CONSTRUCTION THE ARCHITECT OR ENGINEER SHALL SUBMIT TO THE BUILDING OFFICIAL A LETTER ATTESTING THAT THE SITE HAS BEEN OBSERVED AND THAT THE FOUNDATION CONDITIONS ARE SIMILAR TO THOSE UPON WHICH THE DESIGN IS BASED.
3. SOIL AT THE BUILDING AREA SHALL BE VIBRE-ROLLED TO A MIN. COMP ACTION OF 2,000 P.S.F. AND MODIFIED PROCTOR DENSITY.
4. CENTERLINE OF FOOTING IS CENTERLINE OF COLUMNS AND BEARING WALLS, UNLESS OTHER WISE NOTED (U.O.N.).
5. ELEVATION OF TOP OF FOOTING SHALL BE 1'- 0" BELOW THE FINISHED GRADE, U.O.N.
6. PROVIDE BEND DOWELS AT ALL COLUMNS AND VERTICAL REINFORCEMENT SAME SIZE AND QUANTITY AS REINFORCEMENT.

REINFORCING

1. MINIMUM CLEAR COVER FOR REBARS TO BE AS FOLLOWS:
   COLUMNS = 1-1/2" TO TIE FOOTINGS = 3" BEAMS = 1-1/2" TO TIE
   PEDESTAL = 2" TO TIE SLAB ON FILL = 2" FROM TOP SLABS = 3/4"
2. ALL REINFORCING SHALL BE HELD SECURELY IN POSITION WITH STANDARD ACCESSORIES
3. SPLICES IN CONTINUOS TOP REBARS SHALL BE MADE AT MID SPAN, SPLICES IN CONTINUOS BOTTOM REBARS SHALL BE OVER SUPPORT(S).
4. SPLICES IN REINFORCING, WHERE PERMITTED, SHALL BE AS FOLLOWS:
   COLUMN VERT.BARS = 30 BAR DIA. TEMPERATURE REBARS = 12" MIN.
   FOOTING DOWELS = 30 BAR DIA. + 8" WELDED WIRE MESH = 6"
   TENSION SPLICE = CLASS "C" ALL OTHERS = 30 BAR DIA.
5. PROVIDE 2 N°5 60" LONG BEND BARS AT CORNERS OF BEAMS.

SLAB
4" FIBER STEALTH CONCRETE SLAB 3000 PSI

1. ~~SLAB SHALL BE 2500 PSI CONCRETE (MIN.), 4" THICK, REINFORCED WITH 6"X 6" - 10/10 (GAUGE) WELDED WIRE MESH (W.W.M.),~~ ON WELL COMPACTED FILL.
2. FILL MATERIAL SHALL BE CLEAN SAND AND ROCK COMPACTED TO 95% OF MAXIMUM DENSITY IN LIFTS NOT TO EXCEED 12" IN DEPTH.
3. PLACE CONCRETE SLABS IN A CHECKERBOARD PATTERN, NO PANEL EXCEEDING 25 FEET OF LENGTH, OR 625 SF IN AREA, OR USE CONTROL JOINTS.
4. ELEVATION TOP OF CONCRETE SLAB SHOWN THUSLY; OR MATCH EXISTING ADJACENT FLOOR ELEVATION.
5. WALLS, COLUMNS, AND BEAMS, PENETRATING SLAB ON FILL, SHALL BE ISOLATED BY 1/2" PRE MOLDED JOINT FILLER, UNLESS OTHERWISE NOTED (U.O.N.).
6. SLABS SHALL BE PLACED OVER 1 LAYER OF PLASTIC MEMBRANE, SUCH AS 6 MIL VISQUEEN, OR SIMILAR.
7. SLABS ON FILL SHALL BE CURED CONTINUOUSLY FOR 5 DAYS.

MASONRY

1. CONCRETE MASONRY UNITS (CMU), OR "BLOCKS", SHALL CONFORM TO ASTM C-90 SPECS.
2. COMPRESSIVE STRENGTH OF MASONRY UNITS SHALL BE NOT LESS THAN FM=1500 PSI.
3. ALL BLOCK WALLS SHALL BE LAID IN A FULL BEDDING OF MORTAR, WITH A COMPLETE COVERAGE OF THE BLOCK'S FACE SHELL (HORIZONTALLY) AND MORTAR GROOVES (VERTICALLY). AND REINFORCED WITH #8 TRUSS TYPE JOINT REINFORCEMENT @ EVERY OTHER COURSE (16"O.C.VERTICALLY)
4. MORTAR TO BOND BLOCK MASONRY SHALL BE TYPE "M", 2,500 PSI.
5. THE FIRST BLOCK CELL ADJACENT TO ANY OPENING SHALL BE FILLED WITH CONCRETE.
6. THE FIRST BLOCK CELL ADJACENT TO ANY OPENING FROM 3'TO 8'SHALL BE REINFORCED WITH 1- #5 VERTICAL AND BE FILLED WITH 2500 PSI CONCRETE.

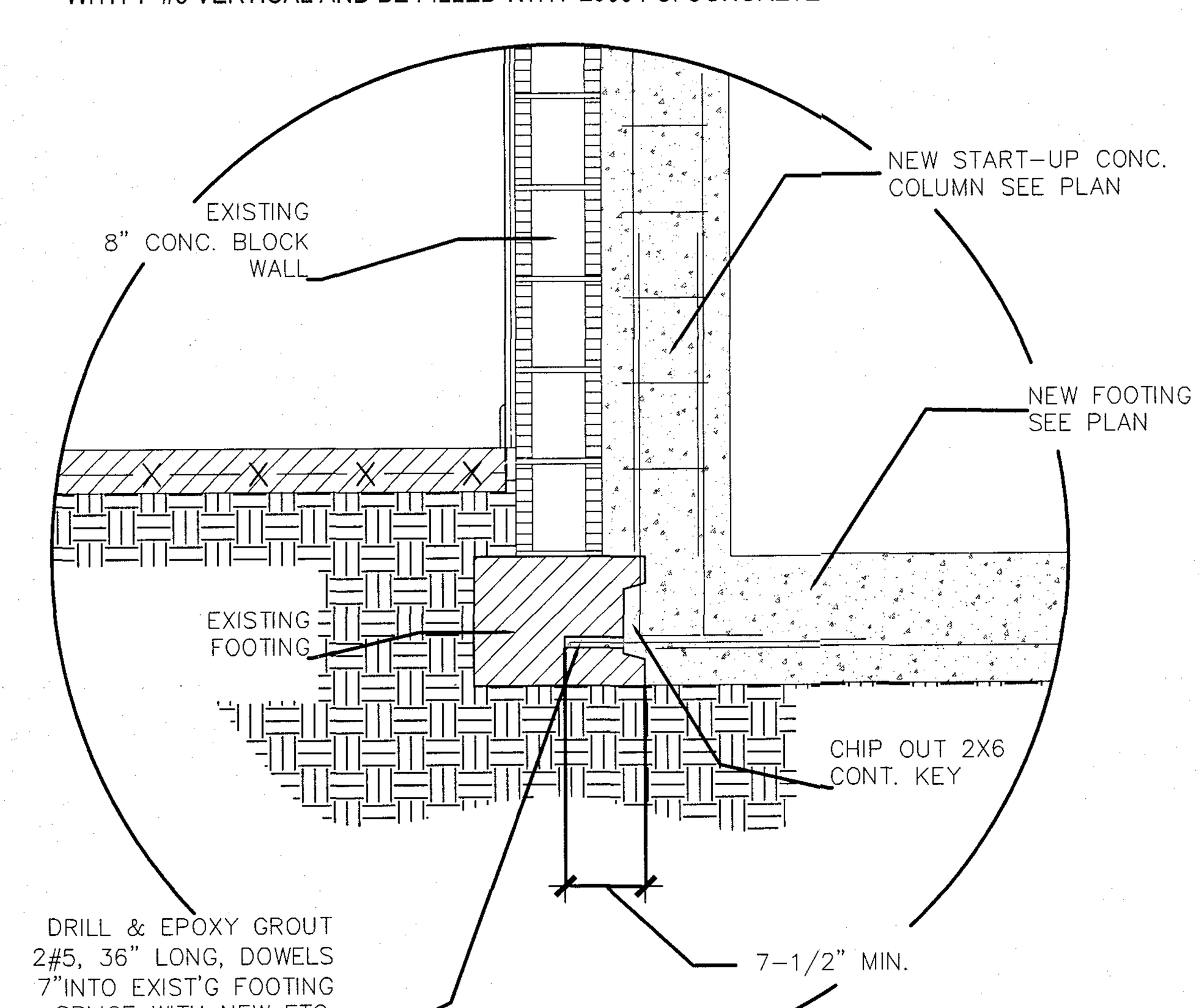

TYP. CONN. OF NEW FTG. TO EXIST'G
SCALE : 3/4" = 1'-0"

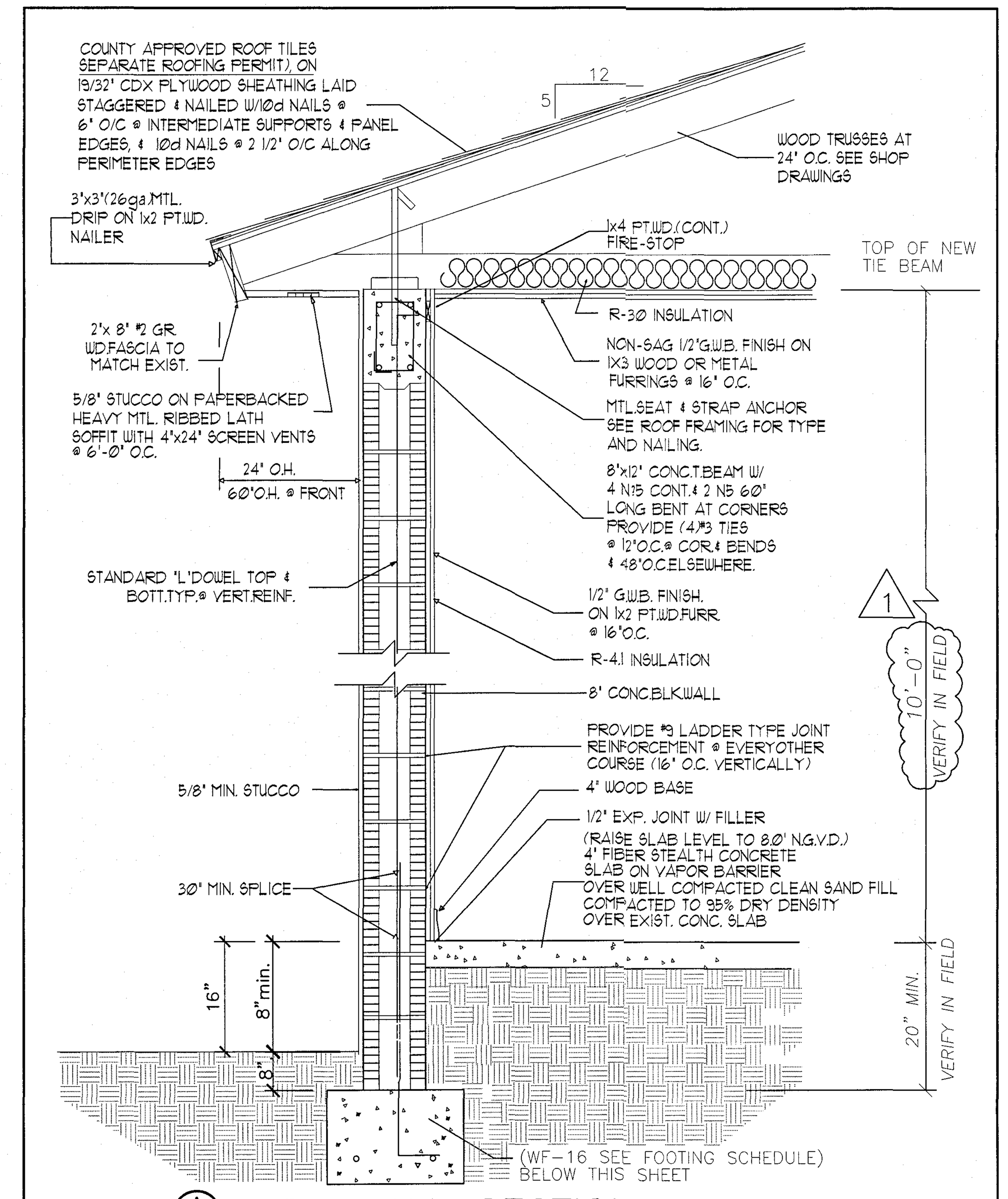

A NEW WALL SECTION SCALE:3/4"= 1'-0"

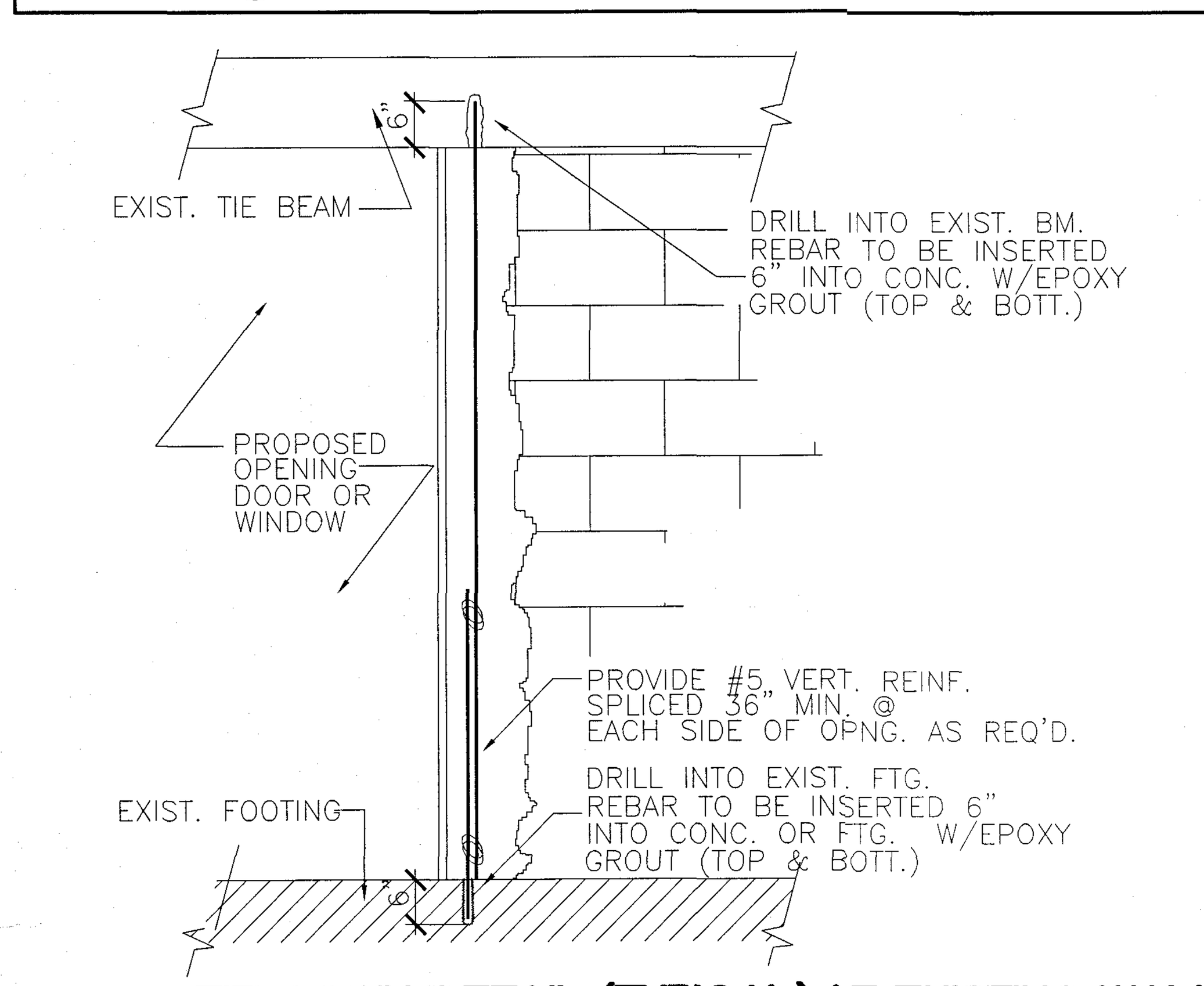

B **TIE DOWN DETAIL (TYPICAL) AT EXISTING WALL**
SCALE: 3/4" = 1'-0"

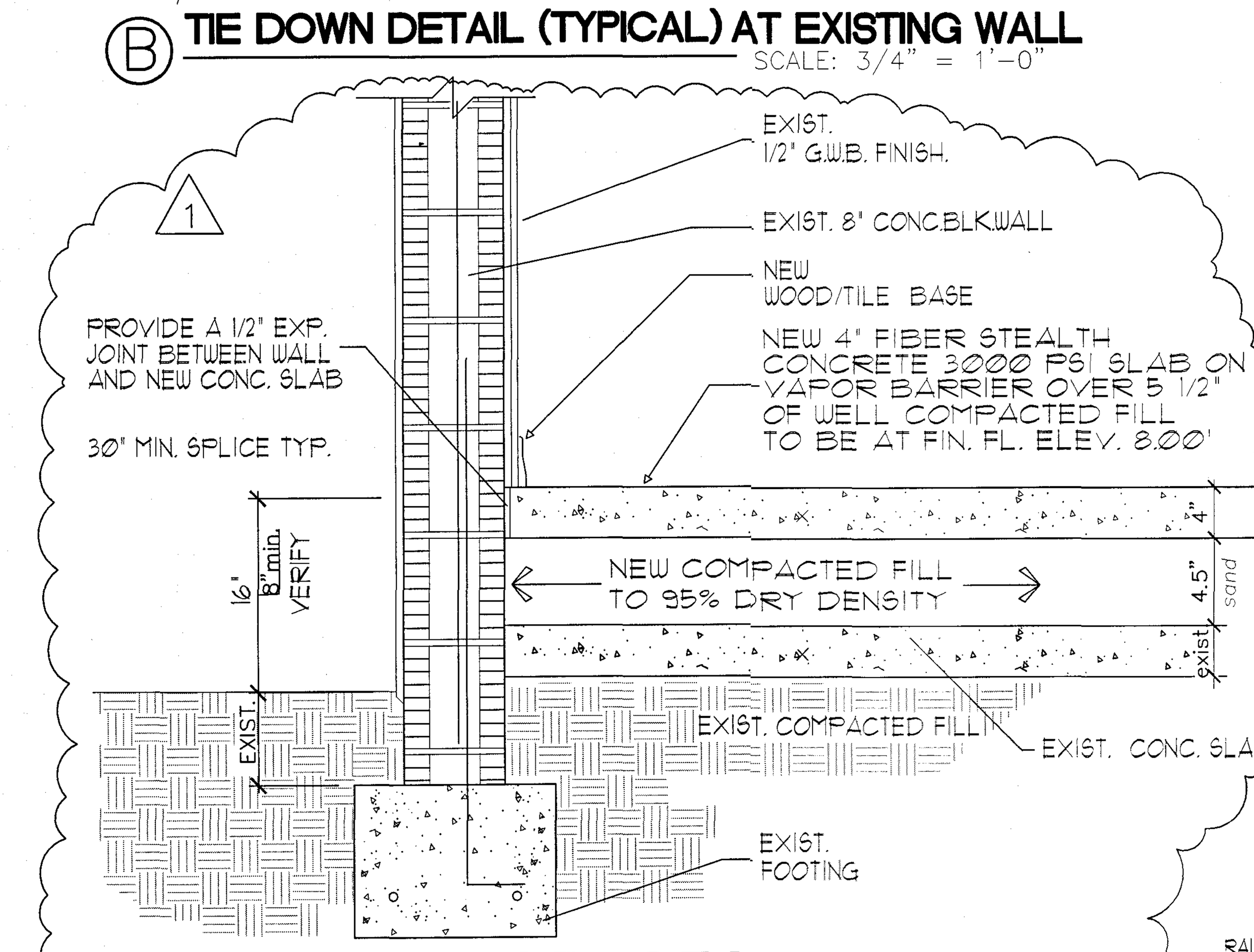

C RAISE FLOOR SECTION SCALE:3/4"= 1'-0"

FOOTING/COLUMN SCHEDULE								
MARK	SIZE	DEPTH	ELEV TOP FTG	BOTT. REINFORCING A	BOTT. REINFORCING B	TOP REINFORCING C	TOP REINFORCING D	REMARKS
WF-16	16"	16"	+0'-8"	2 #5 CONT.				
(C1)	8"x 16"	CONCRETE COLUMNS WITH 4#5 VERT. & #3 TIES AT 8" O.C. VERT.						
(C2)	8"x 8"	CONCRETE STARTER COLUMNS WITH 2#5 VERT.						
(C3)	8"x 12"	CONCRETE COLUMNS WITH 4#5 VERT. & #3 TIES AT 8" O.C. VERT.						
MF-4	48"x48"	20"	– 16"	5 #5	5#5	5#5	5#5	
MF-5	60"x60"	20"	– 16"	7 #5	7#5	7#5	7#5	

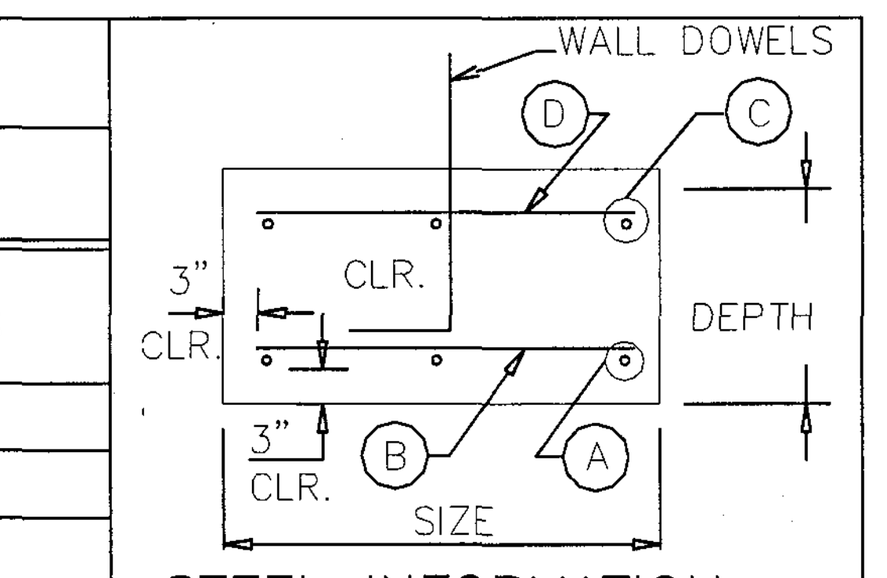

STEEL INFORMATION N.T.S.

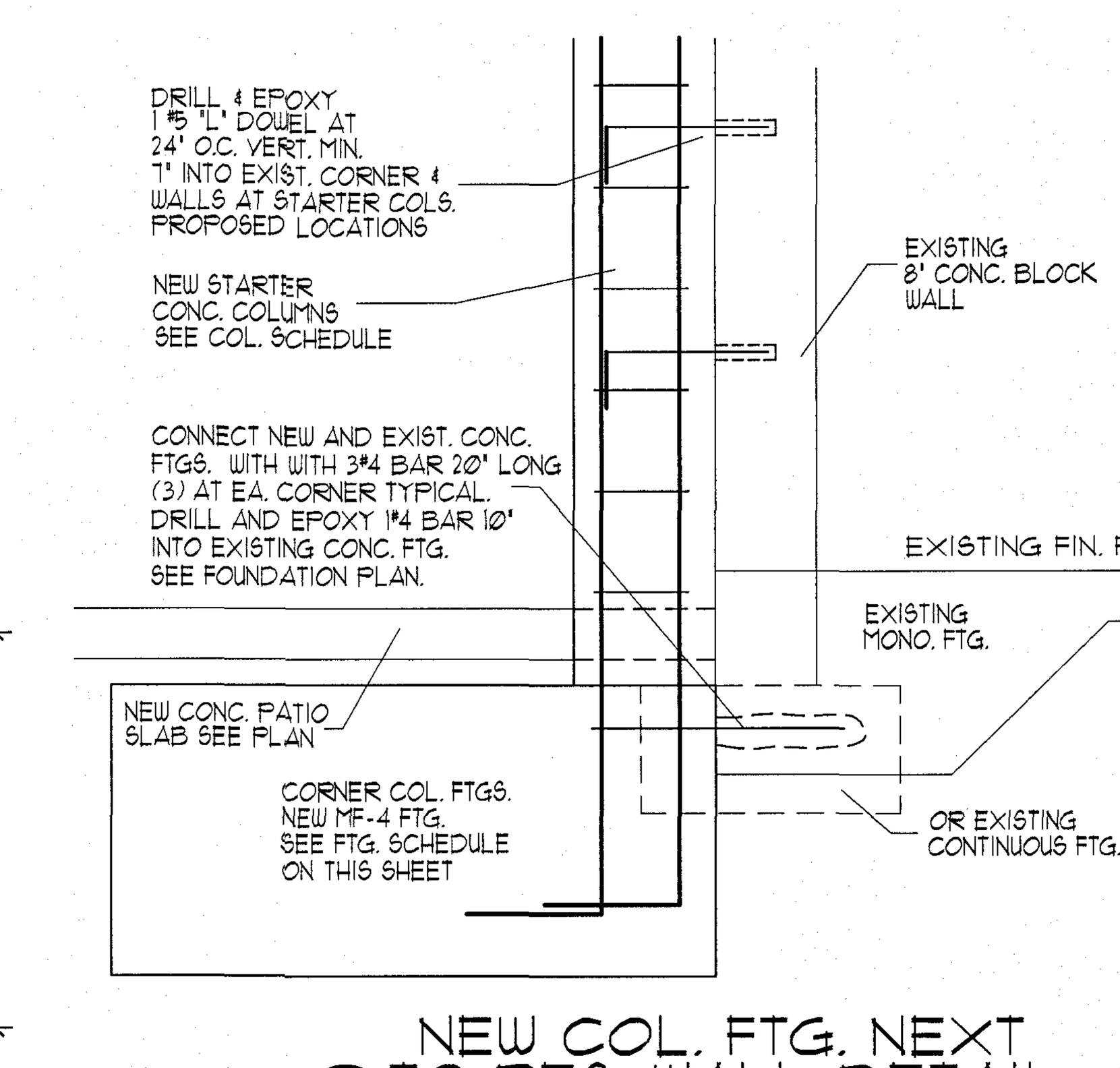

G NEW COL. FTG. NEXT TO RES. WALL DETAIL
SCALE : 3/4" = 1'-0"

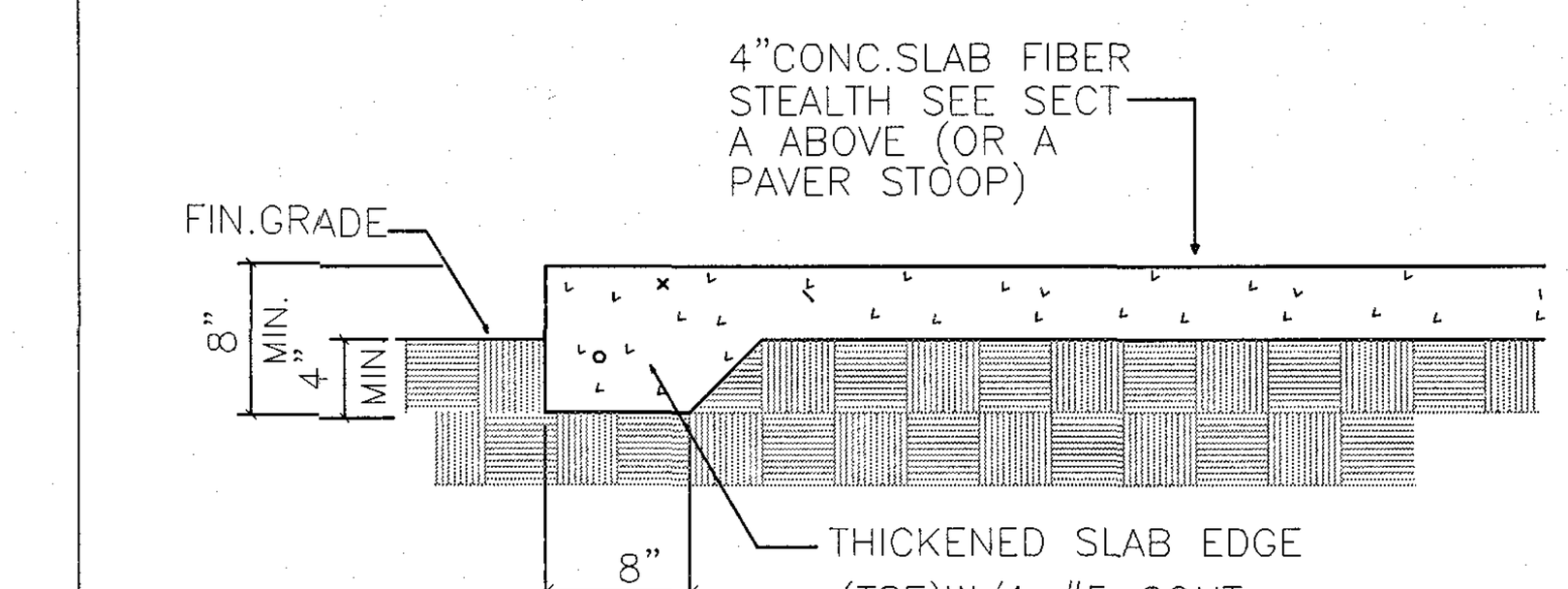

TYP.SLAB END DETAIL (TES8)
SCALE:3/4"= 1'-0"

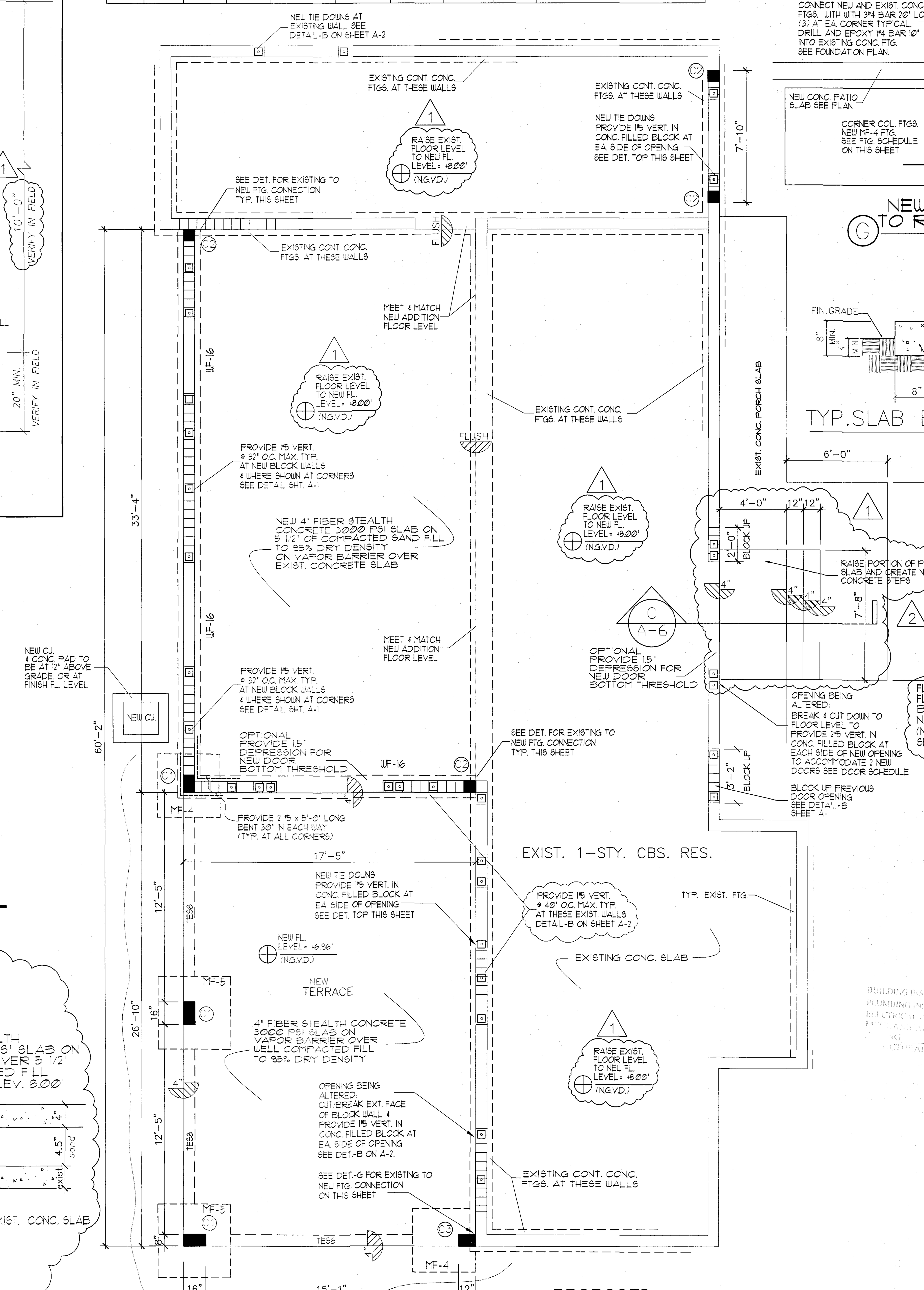

PROPOSED FLOOR PLAN
SCALE:1/4"=1'-0"

CITY OF MIAMI SPRINGS BUILDING DEPARTMENT
APR 12 2022
RECEIVED REWORK

CITY OF MIAMI SPRINGS APPROVED FOR PERMIT ONLY
BUILDING INSPECTOR
PLUMBING INSPECTOR
ELECTRICAL INSPECTOR
MECHANICAL INSPECTOR

NO.	DATE
1	1-14-22 REVISED TO RAISE EXIST. FL. LEVEL TO 8.0
2	3-22-22 REVISED TO SHOW NEW DETAILS.
3	
4	

DESG • DRWN • CHKD • APRV • DATE •

PROJECT NAME: ADDITION TO RESIDENCE FOR:
OWNER/PH: AMBAR PREVAL 786-587-7391
ADDRESS:200 N. ESPLANADE DRIVE MIAMI SPRINGS, FLORIDA 33166
PROJECT ADD: SAME

Guillermo Ramon Gonzalez
9000 SW. 168th Avenue Miami Florida 33196
Registered Architect #13960
Ph:305-484-8171
Ph:786-237-5154 (assistant)

STATE OF FLORIDA GUILLERMO RAMON GONZALEZ AR0013960 Seal REGISTERED ARCHITECT
Guillermo Ramon Gonzalez
R.A. 13960
STATE OF FLORIDA

101521

A-2

GENERAL NOTES:

1. CONCRETE SHALL HAVE 3,000 PSI COMPRESSIVE STRENGTH AT 28 DAYS, UNLESS OTHERWISE NOTED (U.O.N.)
2. ALL REINFORCING STEEL SHALL BE DEFORMED BARS, AND SHALL HAVE A MINIMUM YIELD STRENGTH OF 60,000 PSI GRADE 60, AND MEET ASTM A-615 SPECS.
3. ALL STRUCTURAL STEEL SHALL HAVE A MINIMUM YIELD STRENGTH OF 36,000 PSI, AND MEET ASTM A-36 SPECS.
4. DROP TIE BEAM OVER DOORS EXTEND 8" PAST OPENING ON BOTH SIDES AND ADD 2-#5 BARS FOR EVERY ADDITIONAL 8" OF BEAM HEIGHT (2 ADDITIONAL BARS MIN.)

FOUNDATIONS

SOIL STATEMENT:

1. THE SOIL AT THIS SITE HAS BEEN OBSERVED BY THE ARCHITECT OR ENGINEER TO BE COMPOSED OF SAND AND ROCKS AND CAN BE CONSIDERED TO HAVE AN ALLOWABLE MINIMUM DESIGN BEARING CAPACITY OF 2,000 P.S.F. (SHOULD ANY OTHER CONDITIONS OR MATERIALS BE ENCOUNTERED IN THE PROCESS OF CONSTRUCTION THE ARCHITECT OR ENGINEER SHALL BE NOTIFIED BEFORE PROCEEDING WITH THE WORK).

   ALL BUILDINGS SHALL HAVE PRE-CONSTRUCTION TREATMENT PROTECTION AGAINST SUBTERRANEAN TERMITES AS PER F.B.C. 2020 7th EDITION.A CERTIFICATE OF COMPLIANCE SHALL BE ISSUED TO THE BUILDING DEPARTMENT BY THE LICENSED PEST CONTROL COMPANY THAT CONTAINS THE FOLLOWING STATEMENTS : " THE BUILDING HAS RECEIVED A COMPLETE TREATMENT FOR THE PREVENTION OF SUBTERRANEAN TERMITES. TREATMENT IS IN ACCORDANCE WITH THE RULES AND LAWS ESTABLISHED BY THE FLORIDA DEPARTMENT OF AGRICULTURE AND CONSUMER SERVICES ".
2. AT THE TIME OF CONSTRUCTION THE ARCHITECT OR ENGINEER SHALL SUBMIT TO THE BUILDING OFFICIAL A LETTER ATTESTING THAT THE SITE HAS BEEN OBSERVED AND THAT THE FOUNDATION CONDITIONS ARE SIMILAR TO THOSE UPON WHICH THE DESIGN IS BASED.
3. SOIL AT THE BUILDING AREA SHALL BE VIBRE-ROLLED TO A MIN. COMP ACTION OF 2,000 P.S.F. AND MODIFIED PROCTOR DENSITY.
4. CENTERLINE OF FOOTING IS CENTERLINE OF COLUMNS AND BEARING WALLS, UNLESS OTHER WISE NOTED (U.O.N.).
5. ELEVATION OF TOP OF FOOTING SHALL BE 1'- 0" BELOW THE FINISHED GRADE, U.O.N.
6. PROVIDE BEND DOWELS AT ALL COLUMNS AND VERTICAL REINFORCEMENT SAME SIZE AND QUANTITY AS REINFORCEMENT.

REINFORCING

1. MINIMUM CLEAR COVER FOR REBARS TO BE AS FOLLOWS:
   COLUMNS = 1-1/2" TO TIE FOOTINGS = 3" BEAMS = 1-1/2" TO TIE
   PEDESTAL = 2" TO TIE SLAB ON FILL = 2" FROM TOP SLABS = 3/4"
2. ALL REINFORCING SHALL BE HELD SECURELY IN POSITION WITH STANDARD ACCESSORIES
3. SPLICES IN CONTINUOS TOP REBARS SHALL BE MADE AT MID SPAN, SPLICES IN CONTINUOS BOTTOM REBARS SHALL BE OVER SUPPORT(S).
4. SPLICES IN REINFORCING, WHERE PERMITTED, SHALL BE AS FOLLOWS:
   COLUMN VERT.BARS = 30 BAR DIA. TEMPERATURE REBARS = 12" MIN.
   FOOTING DOWELS = 30 BAR DIA. + 8" WELDED WIRE MESH = 6"
   TENSION SPLICE = CLASS "C" ALL OTHERS = 30 BAR DIA.
5. PROVIDE 2 N°5 60" LONG BEND BARS AT CORNERS OF BEAMS.

SLAB

4" FIBER STEALTH CONCRETE SLAB 3000 PSI

1. ~~SLAB SHALL BE 2500 PSI CONCRETE (MIN.), 4" THICK, REINFORCED WITH 6"X 6" - 10/10 (GAUGE) WELDED WIRE MESH (W.W.M.),~~ ON WELL COMPACTED FILL.
2. FILL MATERIAL SHALL BE CLEAN SAND AND ROCK COMPACTED TO 95% OF MAXIMUM DENSITY IN LIFTS NOT TO EXCEED 12" IN DEPTH.
3. PLACE CONCRETE SLABS IN A CHECKERBOARD PATTERN, NO PANEL EXCEEDING 25 FEET OF LENGTH, OR 625 SF IN AREA, OR USE CONTROL JOINTS.
4. ELEVATION TOP OF CONCRETE SLAB SHOWN THUSLY; OR MATCH EXISTING ADJACENT FLOOR ELEVATION.
5. WALLS, COLUMNS, AND BEAMS, PENETRATING SLAB ON FILL, SHALL BE ISOLATED BY 1/2" PRE MOLDED JOINT FILLER, UNLESS OTHERWISE NOTED (U.O.N.).
6. SLABS SHALL BE PLACED OVER 1 LAYER OF PLASTIC MEMBRANE, SUCH AS 6 MIL VISQUEEN, OR SIMILAR.
7. SLABS ON FILL SHALL BE CURED CONTINUOUSLY FOR 5 DAYS.

MASONRY

1. CONCRETE MASONRY UNITS (CMU), OR "BLOCKS", SHALL CONFORM TO ASTM C-90 SPECS.
2. COMPRESSIVE STRENGTH OF MASONRY UNITS SHALL BE NOT LESS THAN FM=1500 PSI.
3. ALL BLOCK WALLS SHALL BE LAID IN A FULL BEDDING OF MORTAR, WITH A COMPLETE COVERAGE OF THE BLOCK'S FACE SHELL (HORIZONTALLY) AND MORTAR GROOVES (VERTICALLY). AND REINFORCED WITH #8 TRUSS TYPE JOINT REINFORCEMENT @ EVERY OTHER COURSE (16"O.C.VERTICALLY)
4. MORTAR TO BOND BLOCK MASONRY SHALL BE TYPE "M", 2,500 PSI.
5. THE FIRST BLOCK CELL ADJACENT TO ANY OPENING SHALL BE FILLED WITH CONCRETE.
6. THE FIRST BLOCK CELL ADJACENT TO ANY OPENING FROM 3'TO 8'SHALL BE REINFORCED WITH 1- #5 VERTICAL AND BE FILLED WITH 2500 PSI CONCRETE.

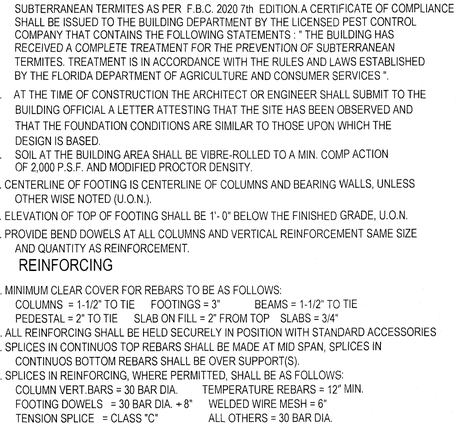

TYP. CONN. OF NEW FTG. TO EXIST'G
SCALE : 3/4" = 1'-0"

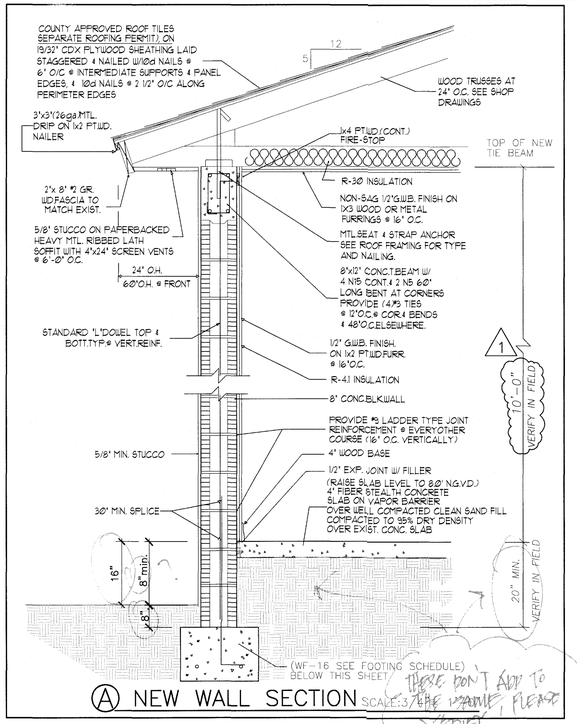

A NEW WALL SECTION SCALE:3/4"= 1'-0"

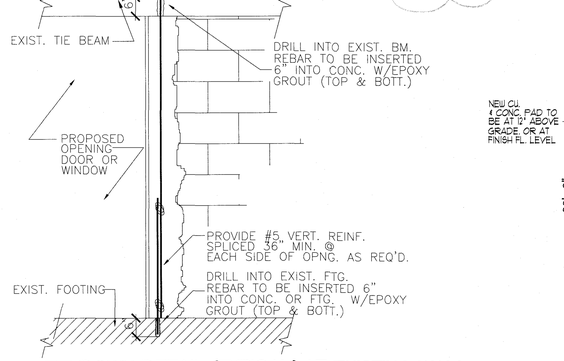

B TIE DOWN DETAIL (TYPICAL) AT EXISTING WALL
SCALE: 3/4" = 1'-0"

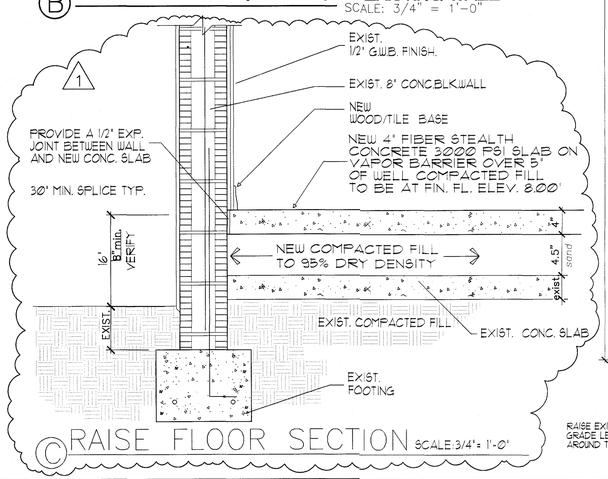

C RAISE FLOOR SECTION SCALE:3/4"= 1'-0"

FOOTING/COLUMN SCHEDULE								
MARK	SIZE	DEPTH	ELEV TOP FTG	BOTT. REINFORCING A	BOTT. REINFORCING B	TOP REINFORCING C	TOP REINFORCING D	REMARKS
WF-16	16"	16"	+0'-8"	2 #5 CONT.				
C1	8"x 16"	CONCRETE COLUMNS WITH 4#5 VERT. & #3 TIES AT 8" O.C. VERT.						
C2	8"x 8"	CONCRETE STARTER COLUMNS WITH 2#5 VERT.						
C3	8"x 12"	CONCRETE COLUMNS WITH 4#5 VERT. & #3 TIES AT 8" O.C. VERT.						
MF-4	48"x48"	20"	- 16"	5 #5	5#5	5#5	5#5	
MF-5	60"x60"	20"	- 12"	7 #5	7#5	7#5	7#5	

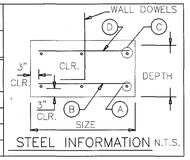

STEEL INFORMATION N.T.S.

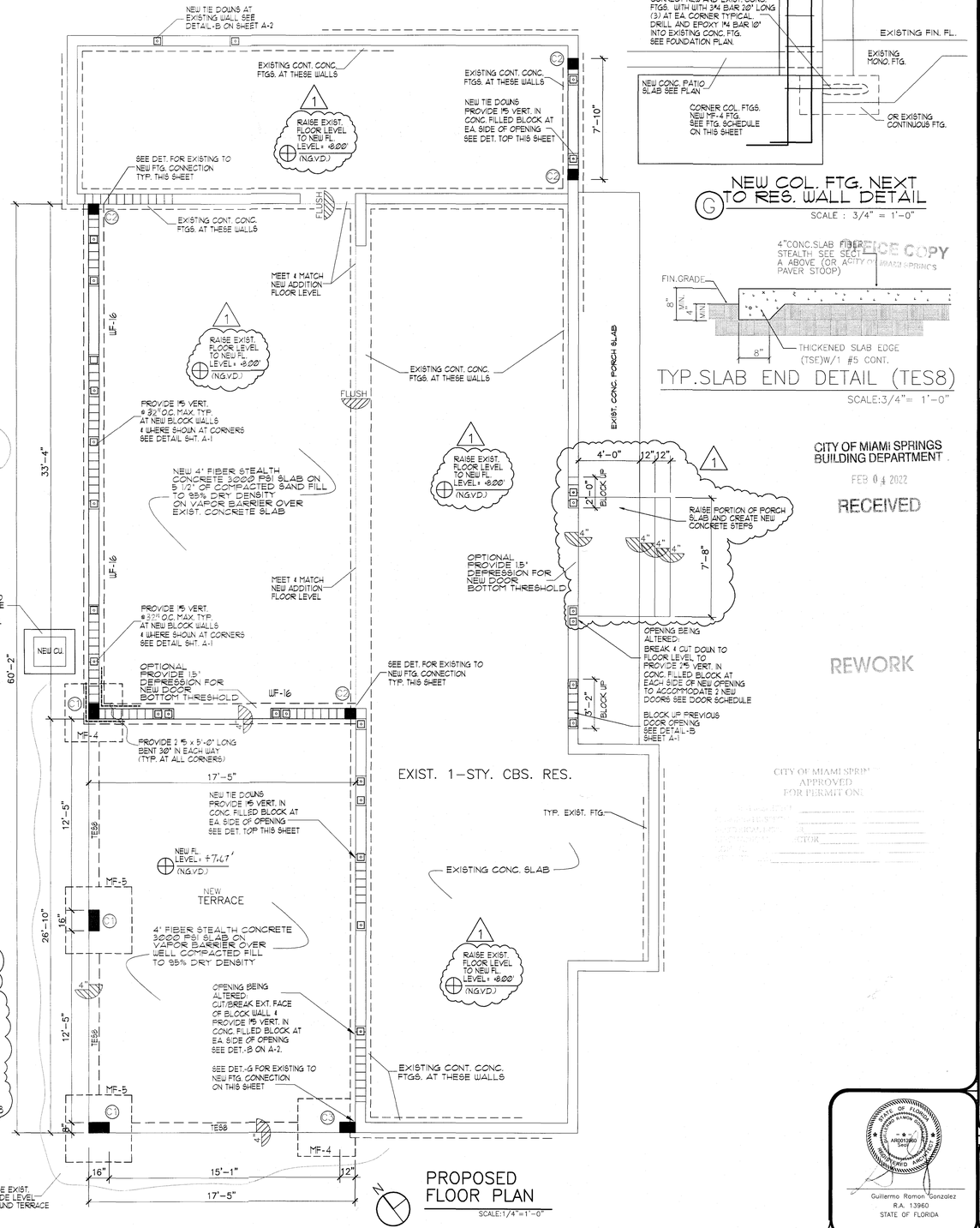

PROPOSED FLOOR PLAN
SCALE:1/4"=1'-0"

NEW COL. FTG. NEXT TO RES. WALL DETAIL
SCALE : 3/4" = 1'-0"

TYP.SLAB END DETAIL (TES8)
SCALE:3/4"= 1'-0"

OFFICE COPY
CITY OF MIAMI SPRINGS

CITY OF MIAMI SPRINGS BUILDING DEPARTMENT
FEB 04 2022
RECEIVED

REWORK

CITY OF MIAMI SPRINGS
APPROVED
FOR PERMIT ONLY
BY _____
DATE _____
COMMENTS _____

NO.	DATE
1	1-14-22 REVISED TO RAISE EXIST FL. LEVEL TO 8.0

PROJECT NAME: ADDITION TO RESIDENCE FOR:
OWNER/PH: AMBAR PREVAL 786-587-7391
ADDRESS:200 N. ESPLANADE DRIVE MIAMI SPRINGS, FLORIDA 33166
PROJECT ADD: SAME

Guillermo Ramon Gonzalez
9000 SW. 168th Avenue Miami Florida 33196 Ph:305-484-8171
Registered Architect #13960 Ph:786-237-5154 (assistant)

Guillermo Ramon Gonzalez
R.A. 13960
STATE OF FLORIDA

101521

A-2

GENERAL NOTES:

1. CONCRETE SHALL HAVE 3,000 PSI COMPRESSIVE STRENGTH AT 28 DAYS, UNLESS OTHERWISE NOTED (U.O.N.)
2. ALL REINFORCING STEEL SHALL BE DEFORMED BARS, AND SHALL HAVE A MINIMUM YIELD STRENGTH OF 60,000 PSI GRADE 60, AND MEET ASTM A-615 SPECS.
3. ALL STRUCTURAL STEEL SHALL HAVE A MINIMUM YIELD STRENGTH OF 36,000 PSI, AND MEET ASTM A-36 SPECS.
4. DROP TIE BEAM OVER DOORS EXTEND 8" PAST OPENING ON BOTH SIDES AND ADD 2-#5 BARS FOR EVERY ADDITIONAL 8" OF BEAM HEIGHT (2 ADDITIONAL BARS MIN.)

FOUNDATIONS

SOIL STATEMENT:

1. THE SOIL AT THIS SITE HAS BEEN OBSERVED BY THE ARCHITECT OR ENGINEER TO BE COMPOSED OF SAND AND ROCKS AND CAN BE CONSIDERED TO HAVE AN ALLOWABLE MINIMUM DESIGN BEARING CAPACITY OF 2,000 P.S.F. (SHOULD ANY OTHER CONDITIONS OR MATERIALS BE ENCOUNTERED IN THE PROCESS OF CONSTRUCTION THE ARCHITECT OR ENGINEER SHALL BE NOTIFIED BEFORE PROCEEDING WITH THE WORK).

   ALL BUILDINGS SHALL HAVE PRE-CONSTRUCTION TREATMENT PROTECTION AGAINST SUBTERRANEAN TERMITES AS PER F.B.C. 2020 7th EDITION. A CERTIFICATE OF COMPLIANCE SHALL BE ISSUED TO THE BUILDING DEPARTMENT BY THE LICENSED PEST CONTROL COMPANY THAT CONTAINS THE FOLLOWING STATEMENTS : " THE BUILDING HAS RECEIVED A COMPLETE TREATMENT FOR THE PREVENTION OF SUBTERRANEAN TERMITES. TREATMENT IS IN ACCORDANCE WITH THE RULES AND LAWS ESTABLISHED BY THE FLORIDA DEPARTMENT OF AGRICULTURE AND CONSUMER SERVICES ".
2. AT THE TIME OF CONSTRUCTION THE ARCHITECT OR ENGINEER SHALL SUBMIT TO THE BUILDING OFFICIAL A LETTER ATTESTING THAT THE SITE HAS BEEN OBSERVED AND THAT THE FOUNDATION CONDITIONS ARE SIMILAR TO THOSE UPON WHICH THE DESIGN IS BASED.
3. SOIL AT THE BUILDING AREA SHALL BE VIBRE-ROLLED TO A MIN. COMP ACTION OF 2,000 P.S.F. AND MODIFIED PROCTOR DENSITY.
4. CENTERLINE OF FOOTING IS CENTERLINE OF COLUMNS AND BEARING WALLS, UNLESS OTHER WISE NOTED (U.O.N.).
5. ELEVATION OF TOP OF FOOTING SHALL BE 1'- 0" BELOW THE FINISHED GRADE, U.O.N.
6. PROVIDE BEND DOWELS AT ALL COLUMNS AND VERTICAL REINFORCEMENT SAME SIZE AND QUANTITY AS REINFORCEMENT.

REINFORCING

1. MINIMUM CLEAR COVER FOR REBARS TO BE AS FOLLOWS:
   COLUMNS = 1-1/2" TO TIE FOOTINGS = 3" BEAMS = 1-1/2" TO TIE
   PEDESTAL = 2" TO TIE SLAB ON FILL = 2" FROM TOP SLABS = 3/4"
2. ALL REINFORCING SHALL BE HELD SECURELY IN POSITION WITH STANDARD ACCESSORIES
3. SPLICES IN CONTINUOS TOP REBARS SHALL BE MADE AT MID SPAN, SPLICES IN CONTINUOS BOTTOM REBARS SHALL BE OVER SUPPORT(S).
4. SPLICES IN REINFORCING, WHERE PERMITTED, SHALL BE AS FOLLOWS:
   COLUMN VERT.BARS = 30 BAR DIA. TEMPERATURE REBARS = 12" MIN.
   FOOTING DOWELS = 30 BAR DIA. + 8" WELDED WIRE MESH = 6"
   TENSION SPLICE = CLASS "C" ALL OTHERS = 30 BAR DIA.

3 5 2 9 , ' (1 / 2 1 * % (1 ' % $ 5 6 $ 7 & 2 5 1 (5 6 2) % ($ 0 6

SLAB

4" FIBER STEALTH CONCRETE SLAB 3000 PSI

1. ~~SLAB SHALL BE 2500 PSI CONCRETE (MIN.), 4" THICK, REINFORCED WITH 6"X 6" - 10/10 (GAUGE) WELDED WIRE MESH (W.W.M.),~~ ON WELL COMPACTED FILL.
2. FILL MATERIAL SHALL BE CLEAN SAND AND ROCK COMPACTED TO 95% OF MAXIMUM DENSITY IN LIFTS NOT TO EXCEED 12" IN DEPTH.
3. PLACE CONCRETE SLABS IN A CHECKERBOARD PATTERN, NO PANEL EXCEEDING 25 FEET OF LENGTH, OR 625 SF IN AREA, OR USE CONTROL JOINTS.
4. ELEVATION TOP OF CONCRETE SLAB SHOWN THUSLY; OR MATCH EXISTING ADJACENT FLOOR ELEVATION.
5. WALLS, COLUMNS, AND BEAMS, PENETRATING SLAB ON FILL, SHALL BE ISOLATED BY 1/2" PRE MOLDED JOINT FILLER, UNLESS OTHERWISE NOTED (U.O.N.).
6. SLABS SHALL BE PLACED OVER 1 LAYER OF PLASTIC MEMBRANE, SUCH AS 6 MIL VISQUEEN, OR SIMILAR.
7. SLABS ON FILL SHALL BE CURED CONTINUOUSLY FOR 5 DAYS.

MASONRY

1. CONCRETE MASONRY UNITS (CMU), OR "BLOCKS", SHALL CONFORM TO ASTM C-90 SPECS.
2. COMPRESSIVE STRENGTH OF MASONRY UNITS SHALL BE NOT LESS THAN FM=1500 PSI.
3. ALL BLOCK WALLS SHALL BE LAID IN A FULL BEDDING OF MORTAR, WITH A COMPLETE COVERAGE OF THE BLOCK'S FACE SHELL (HORIZONTALLY) AND MORTAR GROOVES (VERTICALLY). AND REINFORCED WITH #8 TRUSS TYPE JOINT REINFORCEMENT @ EVERY OTHER COURSE (16"O.C.VERTICALLY)
4. MORTAR TO BOND BLOCK MASONRY SHALL BE TYPE "M", 2,500 PSI.
5. THE FIRST BLOCK CELL ADJACENT TO ANY OPENING SHALL BE FILLED WITH CONCRETE.
6. THE FIRST BLOCK CELL ADJACENT TO ANY OPENING FROM 3'TO 8'SHALL BE REINFORCED WITH 1- #5 VERTICAL AND BE FILLED WITH 2500 PSI CONCRETE.

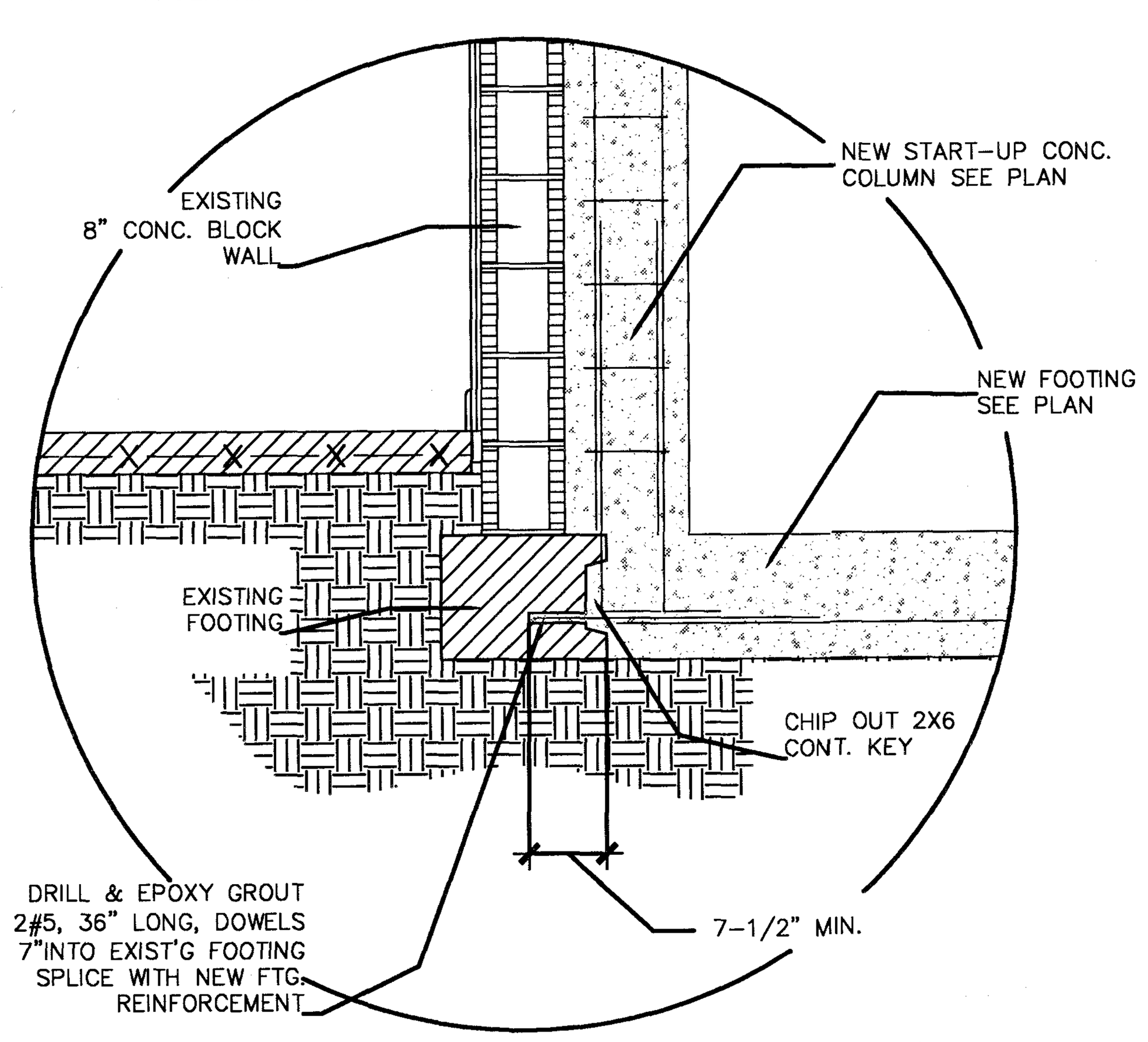

TYP. CONN. OF NEW FTG. TO EXIST'G

SCALE : 3/4" = 1'-0"

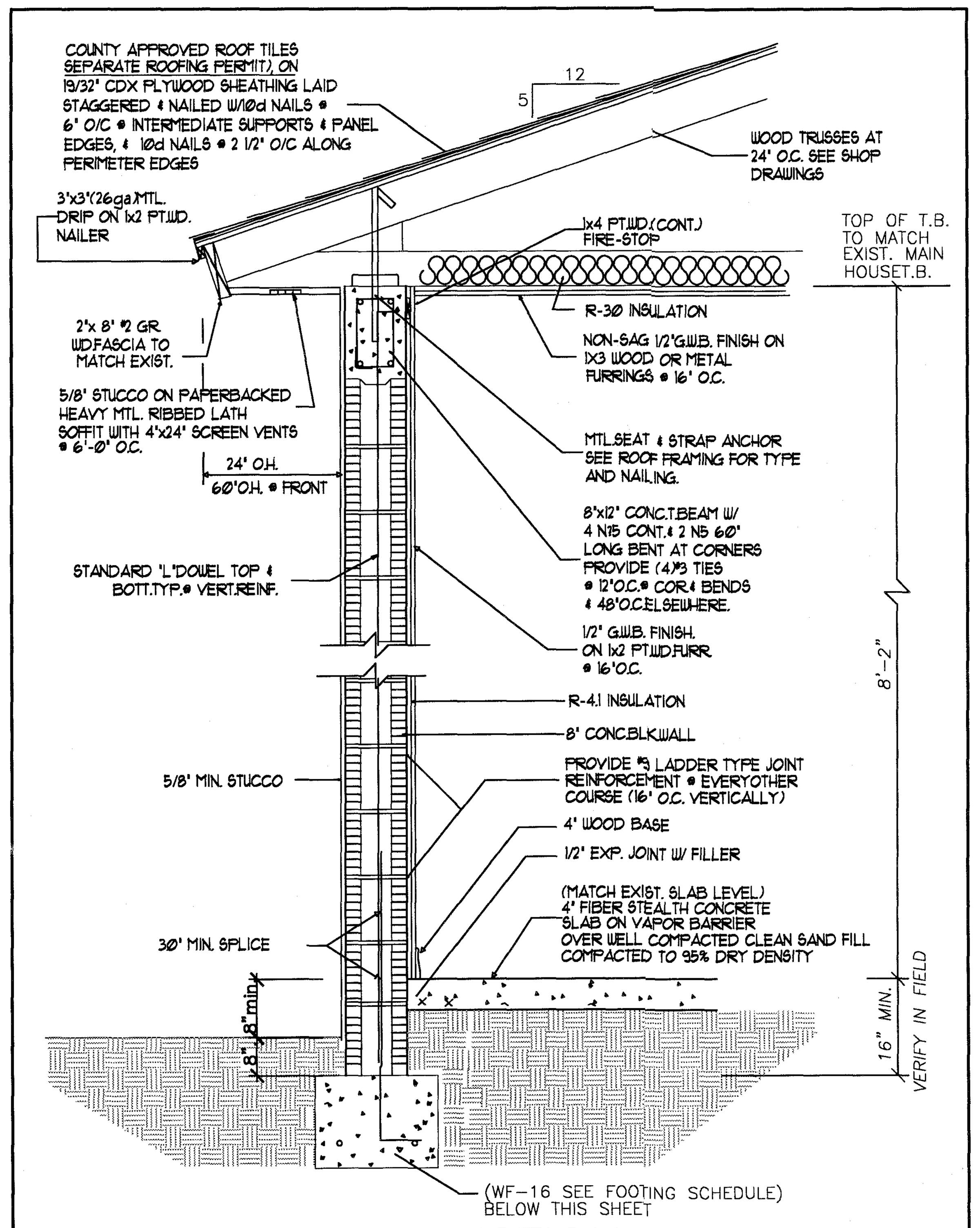

(A) WALL SECTION

SCALE:3/4"= 1'-0"

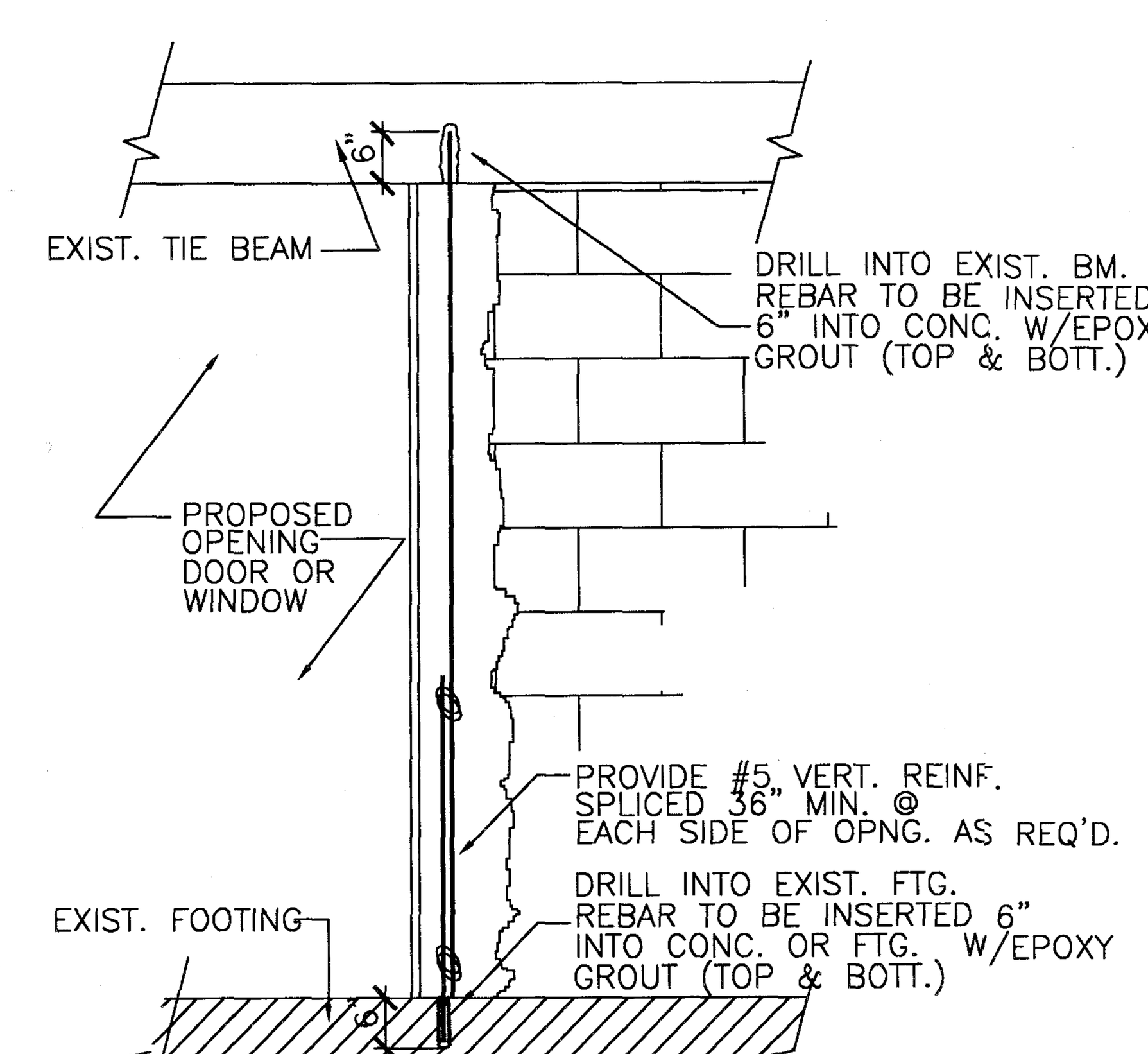

(B) TIE DOWN DETAIL (TYPICAL) AT EXISTING WALL

SCALE: 3/4" = 1'-0"

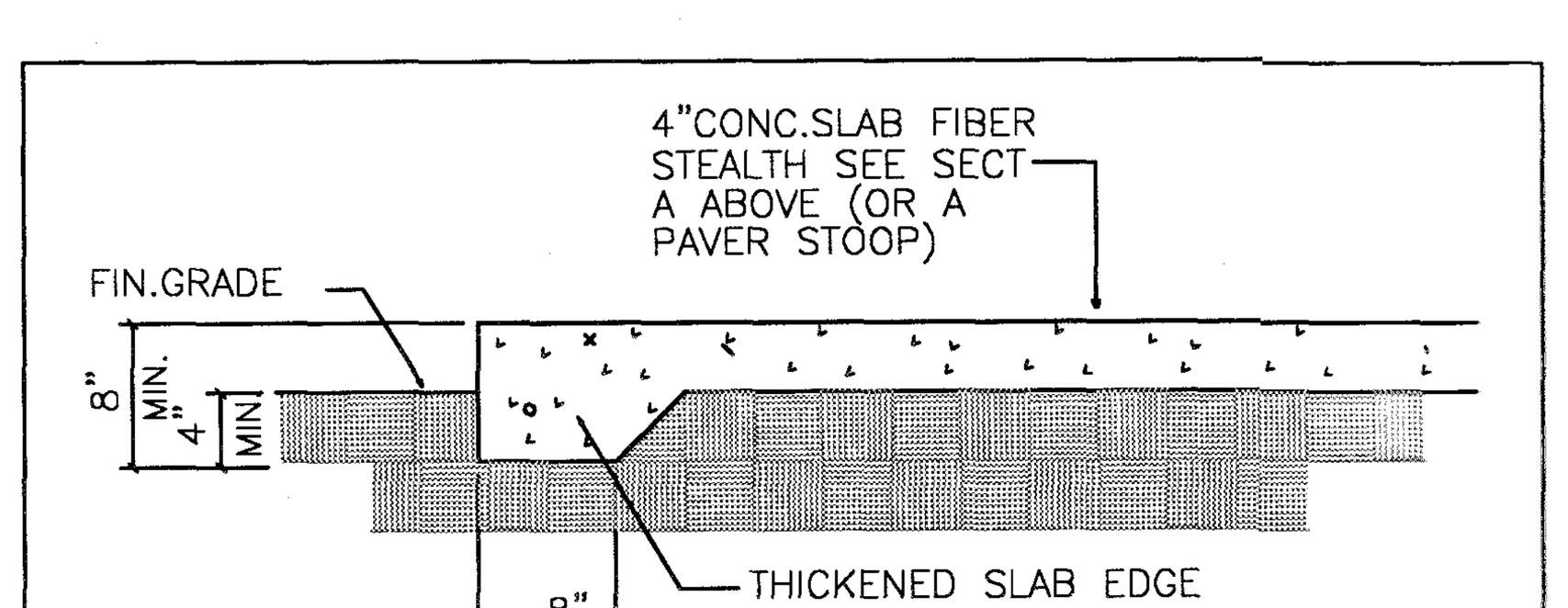

TYP.SLAB END DETAIL (TES8)

SCALE:3/4"= 1'-0"

FOOTING/COLUMN SCHEDULE								
MARK	SIZE	DEPTH	ELEV TOP FTG	BOTT. REINFORCING A	BOTT. REINFORCING B	TOP REINFORCING C	TOP REINFORCING D	REMARKS
WF-16	16"	16"	+0'-8"	2 #5 CONT.				
C1	8"x 16"	CONCRETE COLUMNS WITH 4#5 VERT. & #3 TIES AT 8" O.C. VERT.						
C2	8"x 8"	CONCRETE STARTER COLUMNS WITH 2#5 VERT.						
C3	8"x 12"	CONCRETE COLUMNS WITH 4#5 VERT. & #3 TIES AT 8" O.C. VERT.						
MF-4	48"x48"	20"	– 16"	5 #5	5#5	5#5	5#5	
MF-5	60"x60"	20"	– 12"	7 #5	7#5	7#5	7#5	

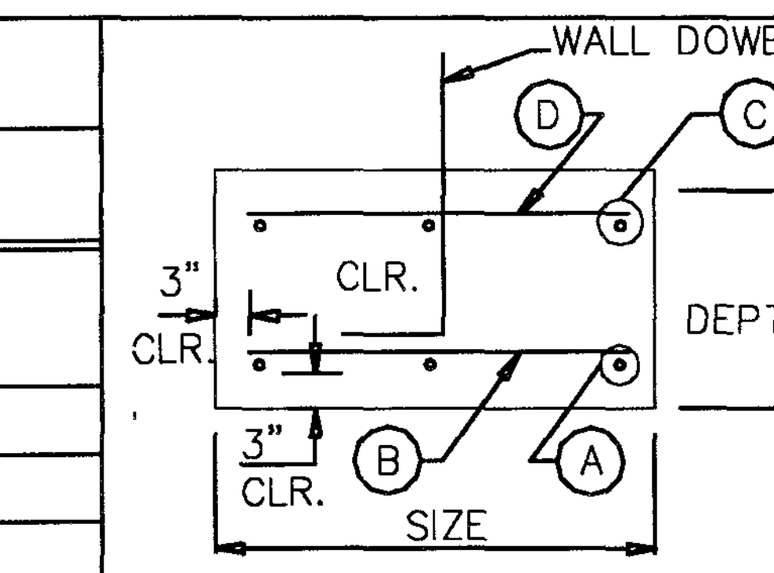

STEEL INFORMATION N.T.S.

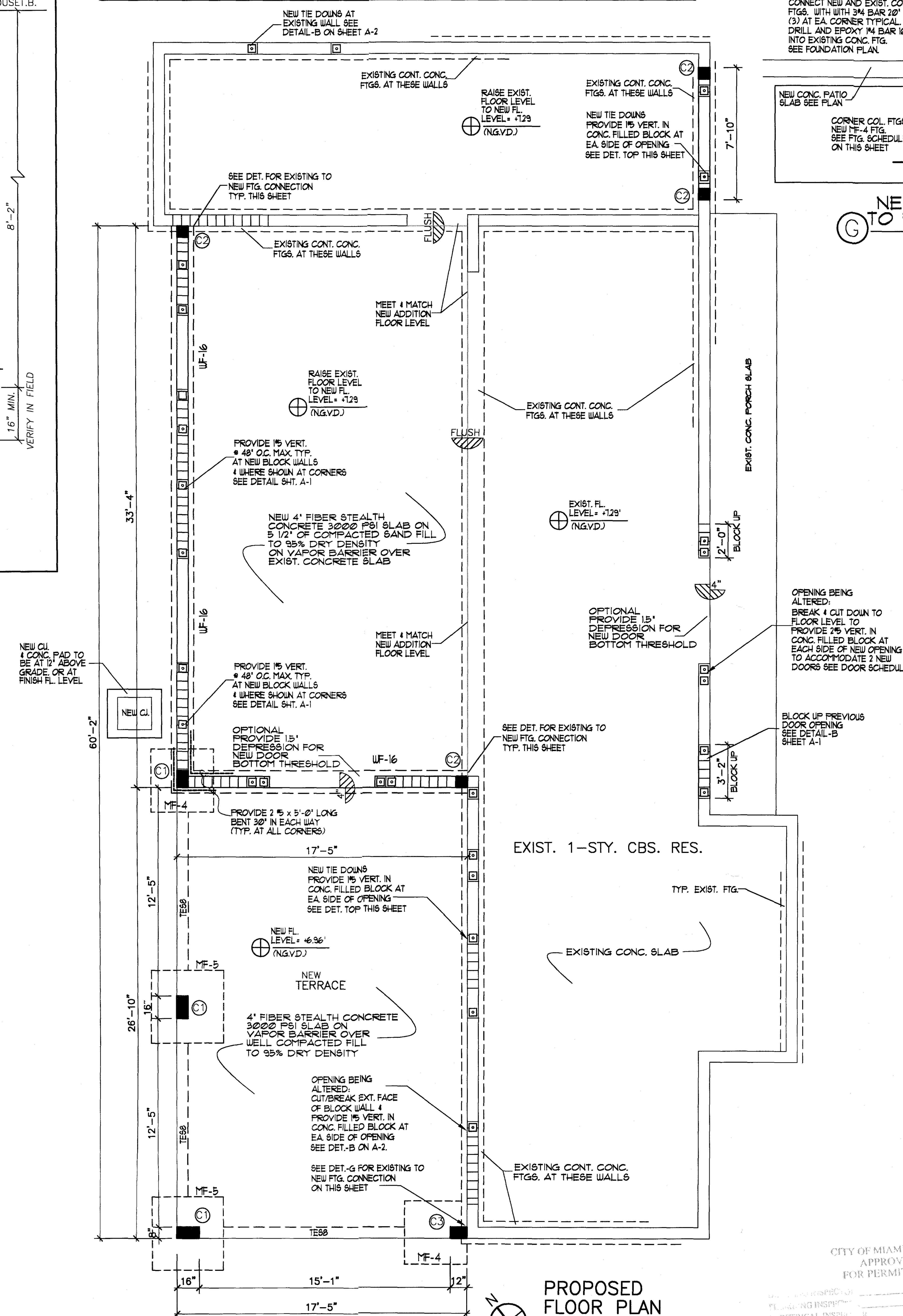

PROPOSED FLOOR PLAN

SCALE:1/4"=1'-0"

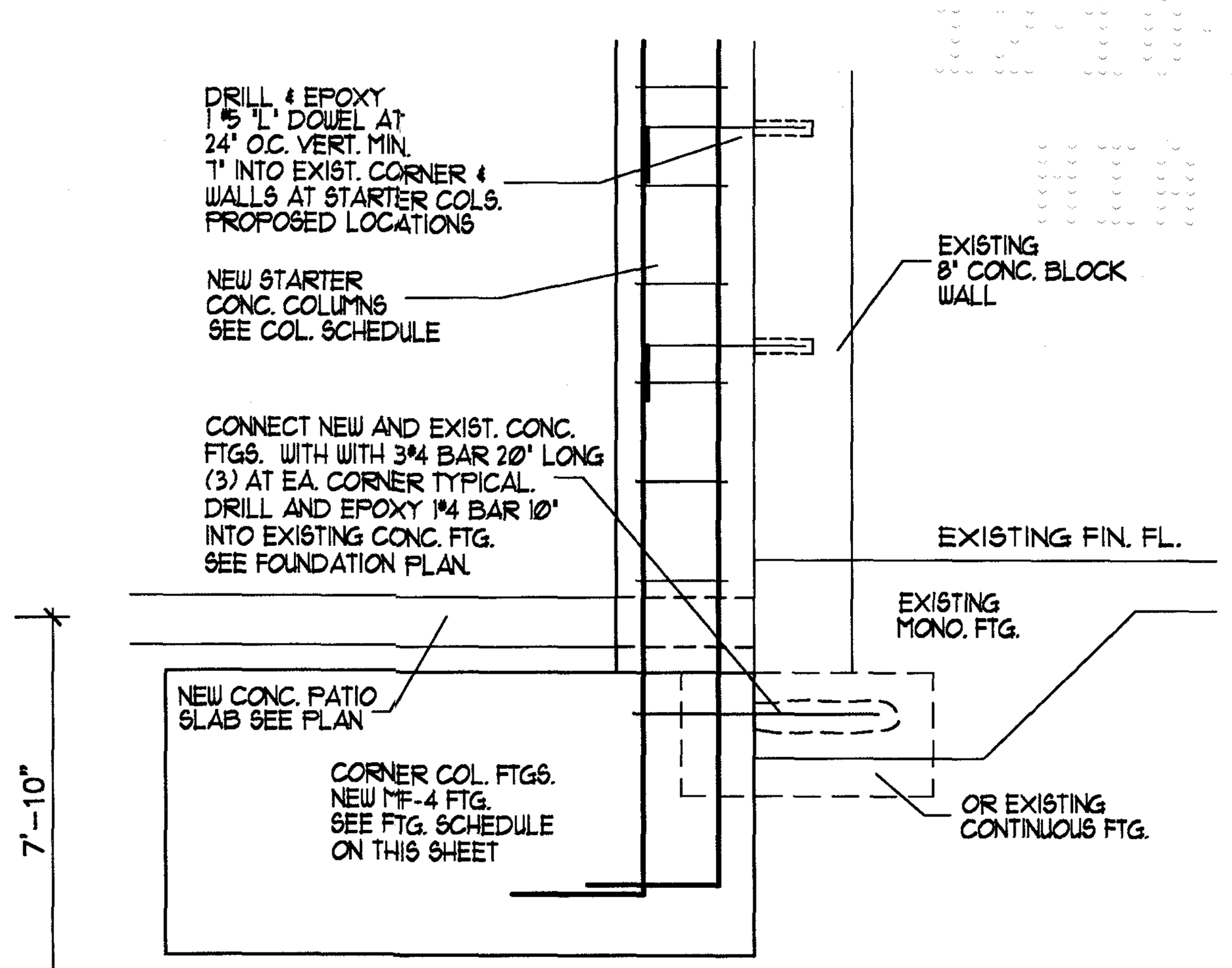

(G) NEW COL. FTG. NEXT TO RES. WALL DETAIL

SCALE : 3/4" = 1'-0"

NO.	DATE
1	.
2	.
3	.
4	.

DESG . DRWN . CHKD . APRV . DATE .

PROJECT NAME: ADDITION TO RESIDENCE FOR:
OWNER/PH: AMBAR PREVAL 786-587-7391
ADDRESS:200 N. ESPLANADE DRIVE MIAMI SPRINGS, FLORIDA 33166
PROJECT ADD: SAME

Guillermo Ramon Gonzalez
9000 SW. 168th Avenue Miami Florida 33196 Ph:305-484-8171
Registered Architect #13960 Ph:786-237-5154 (assistant)

CITY OF MIAMI SPRINGS
APPROVED
FOR PERMIT ONLY

STATE OF FLORIDA GUILLERMO RAMON GONZALEZ AR0013960 Seal REGISTERED ARCHITECT
Guillermo Ramon Gonzalez
R.A. 13960
STATE OF FLORIDA

101521

A-2

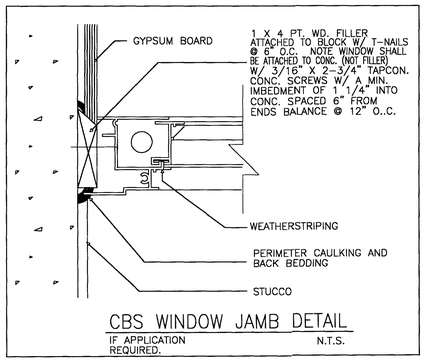

CBS WINDOW JAMB DETAIL

IF APPLICATION REQUIRED. N.T.S.

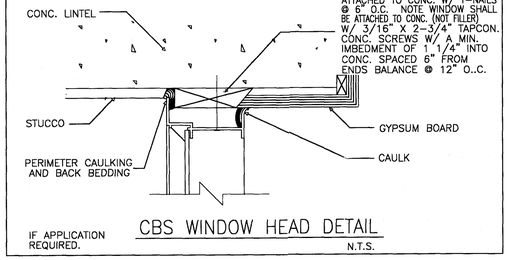

CBS WINDOW HEAD DETAIL

IF APPLICATION REQUIRED. N.T.S.

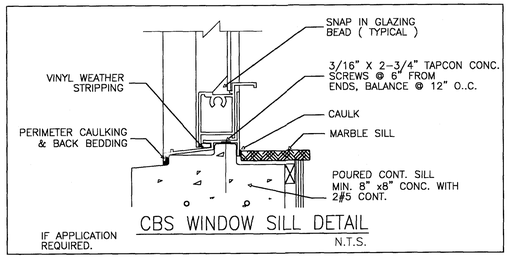

CBS WINDOW SILL DETAIL

IF APPLICATION REQUIRED. N.T.S.

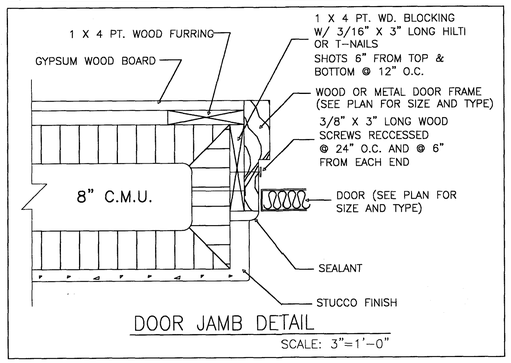

DOOR JAMB DETAIL

SCALE: 3"=1'-0"

FRAMING NOTES:

1. ALL FRAMING SHALL BE DONE IN ACCORDANCE WITH THE LATEST EDITION OF THE "F.B.C." 2020 7th EDITION AND ALL OTHER PERTAINING CODES AND ORDINANCES HAVING JURISDICTION.
2. ALL PLYWOOD USED STRUCTURALLY BE IDENTIFIED FOR GRADE AND GLUE TYPES BY THE TRADEMARKS OF AN APPROVED TESTING AND GRADING AGENCY.
3. ALL PLYWOOD PERMANENTLY EXPOSED IN OUTDOOR LOCATIONS SHALL BE OF EXTERIOR TYPE.
4. ALL LUMBER TWO INCHES OR LESS IN THICKNESS SHALL CONTAIN NOT MORE THAN 19% MOISTURE AT THE TIME OF PERMANENT INCORPORATION IN A BUILDING OR STRUCTURE AND/OR AT THE TIME OF TREATMENT WITH A WOOD PRESERVATIVE.
5. ALL LUMBER SIZES TO HEREIN NOMINAL.
6. LUMBER USED FOR JOISTS AND/OR OTHER STRUCTURAL. MEMBERS SHALL BE OF NO LESS STRENGTH THAN #2 GRADE OF SOUTHERN PINE, DOUGLAS FIR LARCH, HEM FIR, OR SPRUCE PINE FIR.
7. LUMBER USED FOR STUDS IN EXTERIOR WALLS SHALL BE OF A STRESS GRADE NOT LESS THAN 625 PSI NOMINAL EXTREME FIBER STRESS IN BENDING (FB).
8. LUMBER USED FOR STUDS IN INTERIOR NON BEARING WALLS SHALL BE OF A STRESS GRADE NOT LESS THAN 225 PSI NOMINAL EXTREME FIBER STRESS IN BENDING (FB).
9. JOISTS AND RAFTERS SHALL HAVE NOT LESS THAN FOUR INCHES OF BEARING AS PROVIDED IN "F.B.C." 2020 7th EDITION.
10. NOTCHING AND BORING OF JOIST AND RAFTERS SHALL COMPLY WITH THE "F.B.C." 2020 7th EDITION.
11. ENDS OF WOOD JOISTS ENTERING OR BEARING ON MASONRY AND IN CONTACT THEREWITH SHALL BE PRESSURE TREATED, OR OF AN APPROVED DURABLE SPECIES.
12. WHERE MASONRY EXTENDS ABOVE SUCH WOOD MEMBERS SHALL BE FIRE SO THE TOP EDGE DOES NOT ENTER THE MASONRY MORE THAN ONE INCH OR SHALL BE PROVIDED WITH WALL PLATE BOXES OF SELF TYPE OR APPROVED HANGERS.
13. FLOOR JOISTS UNDER ALL WALLS OR PARTITIONS PARALLEL TO THE JOISTS SHALL BE DOUBLED. DOUBLED JOISTS MAY BE SEPARATED NOT MORE THAN SIX INCHES.
14. FLOOR JOISTS SUPPORTING CONCRETE FOR BATHROOM FLOORS SHALL HAVE A MAXIMUM SPACING OF 12 INCHES.
15. CEILING JOISTS SPANNING MORE THAN 14 FEET SHALL BE LATERALLY SUPPORTED AT MID-SPAN. F.B.C. 2020 7th EDITION.
16. PRE FABRICATED ROOF TRUSSES SHALL BE DESIGNED BY AN ENGINEER REGISTERED IN THE STATE OF FLORIDA; AND SHALL COMPLY WITH ALL THE REQUIREMENTS OF THE "F.B.C." 2020 7th EDITION.
17. FIRE STOPPING SHALL BE PROVIDED TO CUT OFF ALL CONCEALED DRAFT SPACES BOTH VERTICAL AND HORIZONTAL.
18. ANCHORS SECURING WOOD TO CONCRETE SHALL BE NOT LESS THAN 1"X1/8" STEEL STRAP EMBEDDED IN THE CONCRETE AND NAILED WITH THREE 16D NAILS TO WOOD MEMBERS AS SET FORTH IN OF THE "F.B.C.". 2020 7TH EDITION.
19. ANCHORS SECURING WOOD TO WOOD SHALL BE NOT LESS THAN 1"X1/8" STEEL STRAP NAILED TO EACH MEMBER WITH THREE 16D NAILS, OR SHALL BE A COMMERCIAL ANCHOR APPROVED BY THE BUILDING OFFICIAL ANCHORING EACH MEMBER.
20. ALL ANCHORS AND RELATIVE NAILS EXPOSED TO THE WEATHER SHALL BE GALVANIZED.
21. WHERE THE INTERIOR OF MASONRY WALLS ARE FURRED FURRING SHALL BE TREATED AND FIRE STOPPED AS HEREIN REQUIRED AND SHALL BE SECURELY FASTENED TO THE MASONRY WITH NOT LESS THAN ONE CUT NAIL IN ALTERNATE COURSE OF BLOCK.
22. THE ALLOWABLE LOADS ON ALL TYPES OF CONNECTORS SHALL BE AS SET FORTH IN THE STANDARDS LISTED IN OF THE "F.B.C." 2020 7TH EDITION.
23. IN GENERAL NAILS SHALL PENETRATE THE SECOND MEMBER A DISTANCE EQUAL TO THE THICKNESS OF THE MEMBER BEING NAILED THERETO. THERE SHALL BE NOT LESS THAN TWO NAILS IN ANY CONNECTION.

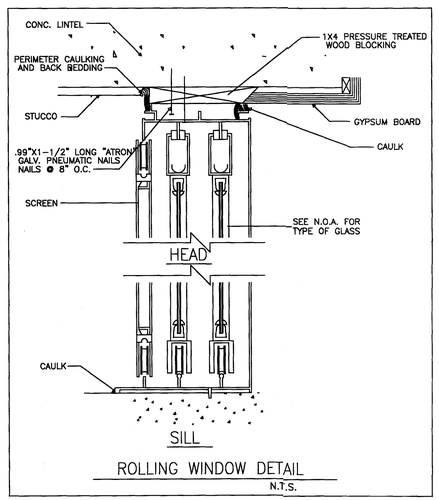

ROLLING WINDOW DETAIL

N.T.S.

NOTE: OWNER/G.C. TO VERIFY ALL NEW/EXIST. WINDOW/DOOR OPENING DIMENSIONS WITH WINDOW OR DOOR MANUF. TO AVOID DISCREPANCIES PRIOR TO BUYING OF ANY MATERIALS AND OR CREATING BLOCK OPENINGS. NEW WINDOWS MAY SLIGHTLY VARY IN SIZE

MIAMI-DADE COUNTY

Department of Regulatory and Economic Resources
Board Administration Section
11805 S.W. 26 Street (Coral Way) Rm. 230
Miami, Florida 33175
Tel (786) 315-2573 Fax (786) 315-2570
www.miamidade.gov/development

MEMO

TO: **All Building Officials in Miami-Dade County**

FROM: **Secretary of the Board** for **Board of Rules and Appeals (BORA)**

DATE: **January 22nd, 2021**

SUBJECT: **BORA Interpretation**
Wind Load Table for Openings in Walls - One- and Two-Family Detached and Multiple Single-Family Dwellings with Mean Roof Height of 30 Feet or Less

At their meeting of January 21, 2021, the Board of Rules and Appeals (BORA) considered an interpretation of the Code to provide guidance on wind pressures to be used in the replacement of windows, doors and overhead sectional (garage) doors, to include French doors, solid doors, and sliding glass doors, in one- and two-family detached dwellings and multiple single-family dwellings (townhouses) with a mean roof height of 30 feet or less.

The interpretation was sought in order to make such replacements easier for homeowners and contractors to meet the minimum requirements of the Code.

Upon discussion, the Board agreed and interpreted that "***The attached Miami-Dade County Wind Load Chart for Openings meets the minimum requirements of the Code and can be used throughout Miami-Dade County.***" The values contained in the attached reference document were determined to be in accordance with ASCE 7-16 Chapter 30 and 2020 FBC sections 1620.2 and 1620.3. (175 mph (3-second gust) /Exposure C).

If you have any additional questions on this matter, please contact Jeanne (Lundy) Clarke, Senior Code Officer at (786) 315- 2057 or via email at Jeanne.Clarke@miamidade.gov.

Miami-Dade County Wind Load Chart for Openings

Based on ASCE 7-16 for Detached One- and Two-Family Dwellings and Multiple Single-Family Dwellings (Townhouses) with a mean roof height <- 30 feet
175 mph (3-second gust) /Exposure C/ K_d=.85, / Pressures in PSF / ASD

These tables are to be used only for one- and two-family detached dwellings and multiple single-family dwellings (townhouses) with a mean roof height of 30 feet or less. They are to be used for replacement windows. These tables can be used for French doors, sliding glass doors, solid doors, and for sectional (overhead) garage doors. They may not be used for roll-up doors due to catenary forces acting on the supports that must be checked.

The pressures are provided in pounds per square foot (psf) for allowable stress design (ASD). A positive (+) pressure acts towards the structure; negative pressure (-) acts away from the structure (suction).

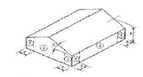

The width of zone 5 is the 'a' distance; it is either 10% of the least horizontal dimension of the structure - or - 0.4 times the mean roof height, but not less than 4% of the least horizontal distance -or- 3 feet. It is measured from the corner of the structure. Note that 3-feet is not the default value, it is the minimum width.

To determine the least horizontal dimension, inscribe a box around the entire structure and use the smallest dimension of the resulting rectangle.

Windows

The effective wind area of a window is based on the size of a single pane of glass. Likewise, a sliding glass door or French door would use the size of one of the leaves, not the size of the opening.

Garage Doors

The wind area of a sectional door is based on the size of a single panel, usually no more than 24" deep, and the width of the door.

Dual Pressure Zones

A common placement for a garage door is near a corner of a residence, which would put a portion of the door in zone 5, leaving the remainder in zone 4. You can select the door based on the zone 5 pressure, or you may use a weighted average. For example, if you have a 10-ft wide door and 2-ft are in zone 5, the zone 5 suction is -50 and the zone 4 suction is -42: ((2 x 50) + (10-2) x 42))/ 10 = (100 + 336)/10 = 436/10 = -43.6 psf. (Round up to -44 psf)

If a window is placed in zone 4 and zone 5, use the zone 5 pressure.

A_{eff} (ft^2)	15 ft Mean Roof Height				20 ft Mean Roof Height				25 ft Mean Roof height				30 ft Mean Roof Height			
	Zone 4		Zone 5		Zone 4		Zone 5		Zone 4		Zone 5		Zone 4		Zone 5	
	+		+	-	+	-	+	-	+	-	+	-	+	-	+	-
10	36	43	40	54	43	46	43	57	45	48	45	60	46	50	46	62
20	36	42	38	50	41	44	41	53	43	46	43	56	44	48	44	58
50	36	39	36	45	38	42	38	48	40	44	40	50	42	45	42	52
100	36	38	34	42	36	40	36	44	38	42	38	46	39	43	39	48
500	30	33	30	33	32	35	32	35	33	37	33	37	35	38	35	38

Wind analysis per MecaWind Pro V2335

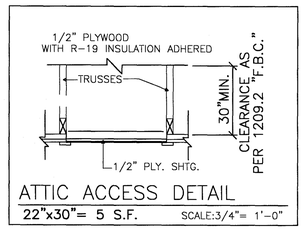

ATTIC ACCESS DETAIL

22"x30"= 5 S.F. SCALE:3/4"= 1'-0"

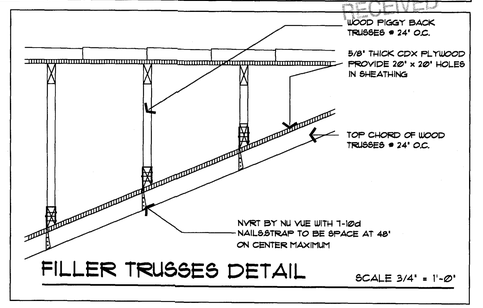

FILLER TRUSSES DETAIL SCALE 3/4" = 1'-0"

I CERTIFY THIS IS BEING DESIGNED TO WITHSTAND 175 MPH WIND SPEED ACCORDING TO ASCE 7-16 AS REQUIRED BY THE FLORIDA BUILDING CODE REVISED 2020 EDITION 7th EDITION

SCHEDULE

MARK	DESCRIPTION
1	ANGLE 3" x 3" x 1/4" W/ EXTENDED LEG (Fy=36KSI) SEE DWG.
2	STEEL PLATE 9 3/4" x 4" x 3/8" (Fy=36 KSI)
3	STEEL PLATE 11 1/4" x 4" x 3/8" (Fy=36 KSI)
4	ONE(1), 5/8" DIAM. x 6" THRU BOLT FOR TWO PLY TRUSS ONE(1), 3/4" DIAM. x 7" THRU BOLT FOR THREE PLY TRUSS
5	(4), 3/4" DIAM.HILTI KWIK BOLT II 4 REQ'D.
6	PREFABRICATED TWO OR THREE PLY TRUSS
7	MIN. 8" x 12" CONCRETE TIE BEAM (F =3,000 PSI, MINIMUM)
8	CONCRETE MASONRY BLOCK

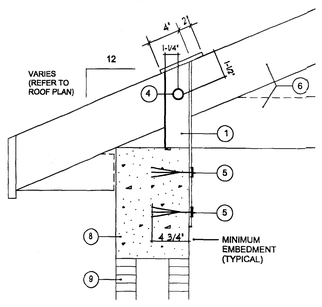

SECTION

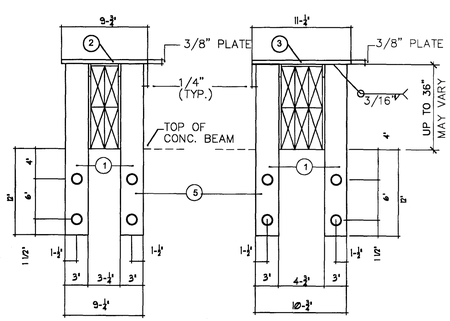

USE THIS BRACKET → TWO PLY TRUSS (MAX UPLIFT = 8,475#) THREE PLY TRUSS (MAX UPLIFT = 8,908#)

SPECIAL BRACKET DETAIL

CITY OF MIAMI SPRINGS BUILDING DEPARTMENT
MAY 05 2022
RECEIVED
OFFICE COPY
CITY OF MIAMI SPRINGS
REWORK
CITY OF MIAMI SPRINGS
APPROVED
FOR PERMITS

PROJECT NAME: ADDITION TO RESIDENCE FOR:
OWNER/PH: AMBAR PREVAL 786-587-7391
ADDRESS:200 N. ESPLANADE DRIVE MIAMI SPRINGS, FLORIDA 33166
PROJECT ADD: SAME

NO.	DATE
1	
2	
3	
4	

DESG | DRWN | CHKD | APPV | DATE

Guillermo Ramon Gonzalez
9000 SW. 168th Avenue Miami Florida 33196 Ph:305-484-8171
Registered Architect #13960 Ph:786-237-5154 (assistant)

101521

A-3

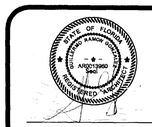

Guillermo Ramon Gonzalez
R.A. 13960
STATE OF FLORIDA

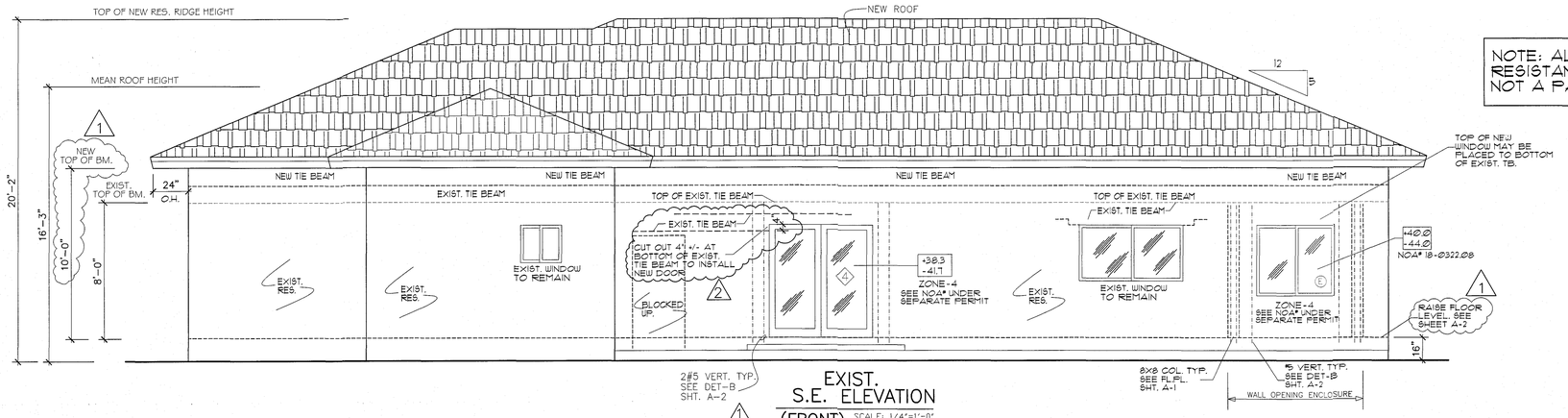

EXIST. S.E. ELEVATION (FRONT)

SCALE: 1/4"=1'-0"

NOTE: ALL NEW WINDOWS & EXTERIOR DOORS TO BE IMPACT RESISTANT SEE NOAS. ALSO TO BE UNDER A SEPARATE SUB PERMIT. NOT A PART OF THIS PERMIT.

NOTE: ALL EXTERIOR WALL COVERING AND ROOF ASSEMBLIES AND ROOF TOP STRUCTURES SHALL COMPLY WITH HI-VELOCITY HURRICANE ZONE AS PER CHAPTER 44 , R4401.1 & R4402.1 OF THE F.B.C. RESIDENTIAL 2020 - 7TH EDITION.

NOTE:
ALL WINDOWS, DOORS AND/OR ANY OTHER COMPONENTS INSTALLATION SHALL BE IN ACCORDANCE W/ MANUFACTURER'S SPECIFICATIONS SET FORTH IN THE APPROVED PRODUCT CONTROL APPROVAL.

NOTE: OWNER/G.C. TO VERIFY ALL NEW & WINDOWS/DOOR SIZES TO BE REMOVED/REPLACED

WINDOW SCHEDULE

NOTE: ALL WINDOW SIZES TO BE VERYFIED IN FIELD & WITH WINDOW MANUFG. PRIOR TO COMPONENT FABRICATION & INSTALLATION.

MARK	OPENING WIDTH	OPENING HEIGTH	CODE	TYPE	AREA (SF)	MATERIAL	REMARKS ALL NEW WINDOWS TO BE IMPACT RESISTANT
(A)	37	38 3/8"	3030	HORZ. ROLLER	9.60	ALUM./GLASS	SEE N.O.A. SEPARATE PERMIT
(B)	37	26	3020	HORZ. ROLLER	6.20	ALUM./GLASS	SEE N.O.A. TEMP. CAT-2 FROSTED
(C)	74-1/8	50 5/8	6030	HORZ. ROLLER	20.20	ALUM./GLASS	SEE N.O.A. EGRESS
(D)	53 1/8	50 5/8	6040	HORZ. ROLLER	18.75	ALUM./GLASS	SEE N.O.A. EGRESS
(E)							

NOTE: ALL NEW WINDOWS & EXTERIOR DOOR TO BE IMPACT RESISTANT SEE NOAS.

WINDOW U VALUE 1.20
WINDOW shgc U VALUE 0.45

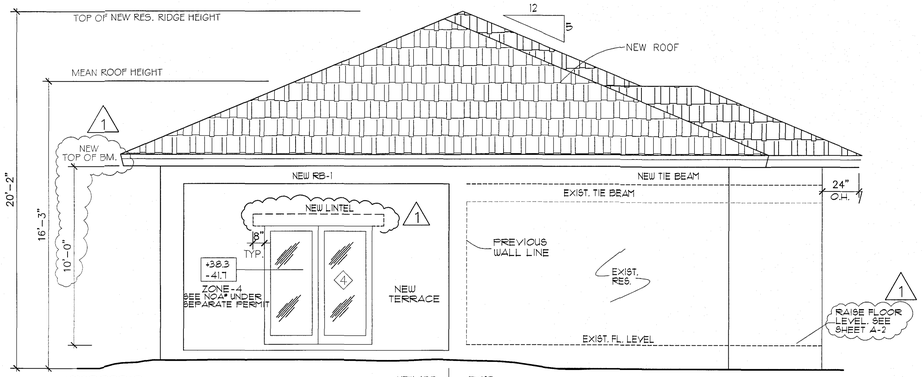

S.W. ELEVATION (SIDE)

SCALE: 1/4"=1'-0"

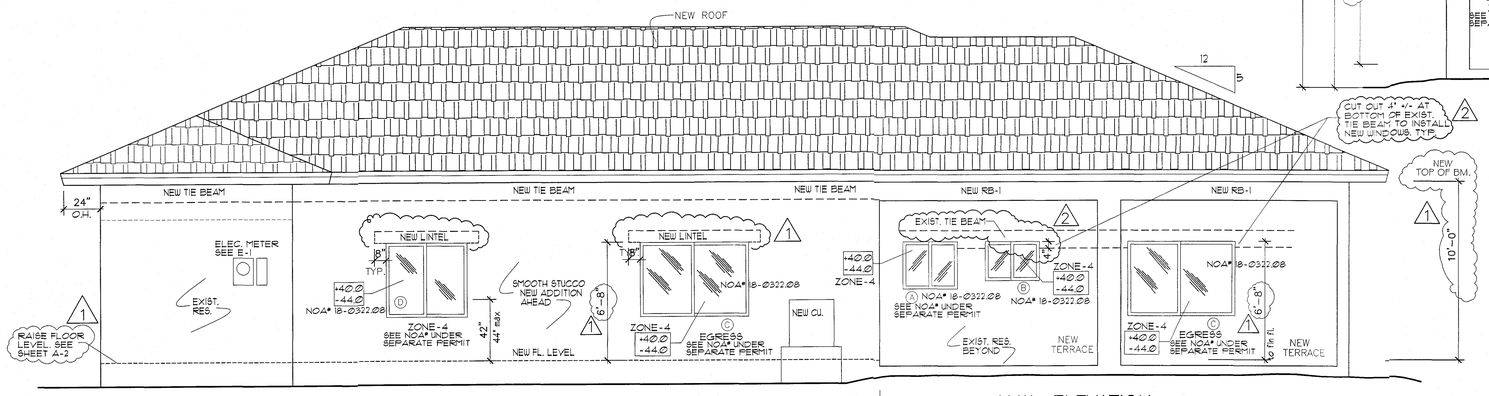

N.W. ELEVATION (REAR)

SCALE: 1/4"=1'-0"

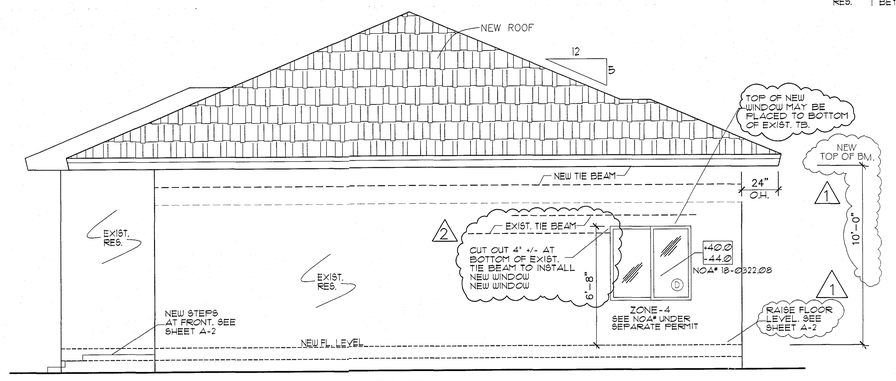

EXIST. N.E. ELEVATION (SIDE)

SCALE: 1/4"=1'-0"

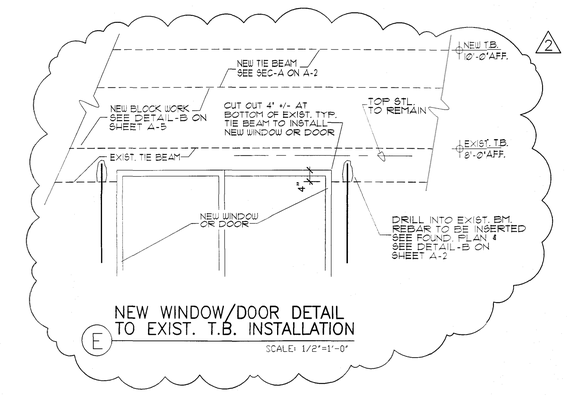

NEW WINDOW/DOOR DETAIL TO EXIST. T.B. INSTALLATION

SCALE: 1/2"=1'-0"

CITY OF MIAMI SPRINGS
BUILDING DEPARTMENT
APR 12 2022
RECEIVED

CITY OF MIAMI SPRINGS
APPROVED
FOR PERMIT ONLY

BUILDING INSPECTOR _____
PLUMBING INSPECTOR _____
ELECTRICAL INSPECTOR _____
MECHANICAL INSPECTOR _____
ZONING _____
STRUCTURAL _____

NETWORK

8" PRECAST U-LINTELS *STANDARD LENGTHS*

OVERALL LENGTH	TOP STEEL	BOTTOM STEEL
3'-0"	2 -7/32" wire	2 -#3 rebar
3'-4"	2 -7/32" wire	2 -#3 rebar
3'-6"	2 -7/32" wire	2 -#3 rebar
4'-0"	2 -7/32" wire	2 -#3 rebar
4'-6"	2 -7/32" wire	2 -#3 rebar
4'-8"	2 -7/32" wire	2 -#3 rebar
5'-4"	2 -7/32" wire	2 -#3 rebar
5'-10"	2 -7/32" wire	2 -#3 rebar
6'-0"	2 -7/32" wire	2 -#4 rebar
6'-6"	2 -7/32" wire	2 -#4 rebar
6'-8"	2 -7/32" wire	2 -#4 rebar
7'-4"	2 -7/32" wire	2 -#4 rebar
7'-6"	2 -7/32" wire	2 -#4 rebar
8'-0"	2 -#3 rebar	2 -#4 rebar
8'-8"	2 -#3 rebar	2 -#4 rebar
9'-4"	2 -#3 rebar	2 -#4 rebar
10'-0"	2 -#3 rebar	2 -#4 rebar
10'-6"	2 -#3 rebar	2 -#4 rebar
10'-8"	2 -#3 rebar	2 -#5 rebar
11'-4"	2 -#3 rebar	2 -#5 rebar
12'-0"	2 -#3 rebar	2 -#5 rebar
13'-4"	2 -#3 rebar	2 -#5 rebar
14'-0"	2 -#3 rebar	2 -#5 rebar

Additional lengths available by special order

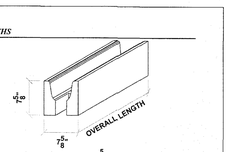

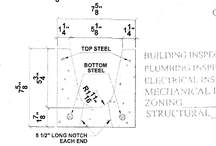

Rebar: ASTM A615 Grade 60
Wire: ASTM A510
Concrete Strength: 4000 psi
Average Self Weight: 33 plf
Finish: Grey Block

8" PRESTRESSED U-LINTELS *STANDARD LENGTHS*

OVERALL LENGTH	TOP STEEL	BOTTOM STEEL
14'-8"	NONE	2 -7/16 strand
15'-4"	NONE	2 -7/16 strand
17'-4"	NONE	2 -7/16 strand
19'-4"	2 -7/32" wire	2 -7/16 strand
21'-4"	2 -7/32" wire	2 -7/16 strand 2 - #4 rebar
22'-0"	2 -7/32" wire	2 -7/16 strand 2 - #4 rebar
24'-0"	2 -7/32" wire	2 -7/16 strand 2 - #4 rebar

Additional lengths available by special order

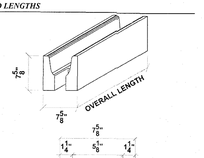

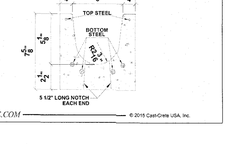

Rebar: ASTM A615 Grade 60
Wire: ASTM A510
Strand: ASTM A416 Grade 270
Concrete Strength: 6000 psi
Synthetic Fibers: 2.5 lbs/yd
Average Self Weight: 37 plf
Finish: Grey Smooth Form

WWW.CASTCRETE.COM
© 2015 Cast-Crete USA, Inc.

NO.	DATE
1	1-14-22 REVISED TO RAISE EXIST. FL. LEVEL TO 8.0
2	3-22-22 REVISED TO SHOW NEW DETAILS.
3	.
4	.

DESG	DRWN	CHKD	APRV	DATE
.	.	.	.	.

PROJECT NAME: ADDITION TO RESIDENCE FOR:
OWNER/PH: AMBAR PREVAL 786-587-7391
ADDRESS:200 N. ESPLANADE DRIVE MIAMI SPRINGS, FLORIDA 33166
PROJECT ADD: SAME

Guillermo Ramon Gonzalez
9000 SW. 168th Avenue Miami Florida 33196 Ph:305-484-8171
Registered Architect #13960 Ph:786-237-5154 (assistant)

101521

A-4

STATE OF FLORIDA
GUILLERMO RAMON GONZALEZ
LICENSE NUMBER
A0001396
REGISTERED ARCHITECT

Guillermo Ramon Gonzalez
R.A. 13960
STATE OF FLORIDA

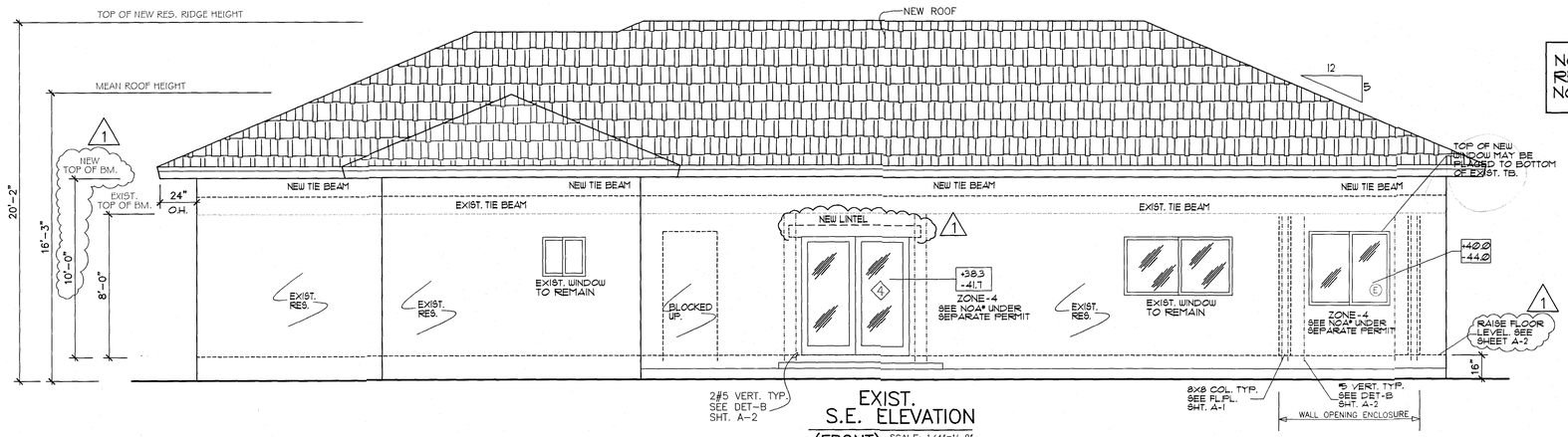

EXIST.
S.E. ELEVATION
(FRONT) SCALE: 1/4"=1'-0"

NOTE: ALL NEW WINDOWS & EXTERIOR DOORS TO BE IMPACT RESISTANT SEE NOAS. ALSO TO BE UNDER A SEPARATE SUB PERMIT. NOT A PART OF THIS PERMIT.

NOTE: ALL EXTERIOR WALL COVERING AND ROOF ASSEMBLIES AND ROOF TOP STRUCTURES SHALL COMPLY WITH HI-VELOCITY HURRICANE ZONE AS PER CHAPTER 44 , R4401.1 & R4402.1 OF THE F.B.C. RESIDENTIAL 2020 - 7TH EDITION.

NOTE:
ALL WINDOWS, DOORS AND/OR ANY OTHER COMPONENTS INSTALLATION SHALL BE IN ACCORDANCE W/ MANUFACTURER'S SPECIFICATIONS SET FORTH IN THE APPROVED PRODUCT CONTROL APPROVAL.

NOTE: OWNER/G.C. TO VERIFY ALL NEW & WINDOW/DOOR SIZES TO BE REMOVED/REPLACED

WINDOW SCHEDULE

NOTE: ALL WINDOW SIZES TO BE VERYFIED IN FIELD & WITH WINDOW MANUFG. PRIOR TO COMPONENT FABRICATION & INSTALLATION.

MARK	OPENING WIDTH	OPENING HEIGTH	CODE	TYPE	AREA (SF)	MATERIAL	REMARKS ALL NEW WINDOWS TO BE IMPACT RESISTANT
Ⓐ	37	38 3/8"	3030	HORZ. ROLLER	9.60	ALUM./GLASS	SEE N.O.A. SEPARATE PERMIT
Ⓑ	37	26	3020	HORZ. ROLLER	6.20	ALUM./GLASS	SEE N.O.A. TEMP. CAT-2 FROSTED
Ⓒ	74-1/8	38 3/8"	6030	HORZ. ROLLER	20.20	ALUM./GLASS	SEE N.O.A. EGRESS
Ⓓ	53 1/8	50 5/8	6040	HORZ. ROLLER	18.75	ALUM./GLASS	SEE N.O.A. EGRESS
Ⓔ							

NOTE: ALL NEW WINDOWS & EXTERIOR DOOR TO BE IMPACT RESISTANT SEE NOAS.

WINDOW U VALUE 1.20
WINDOW shgc U VALUE 0.45

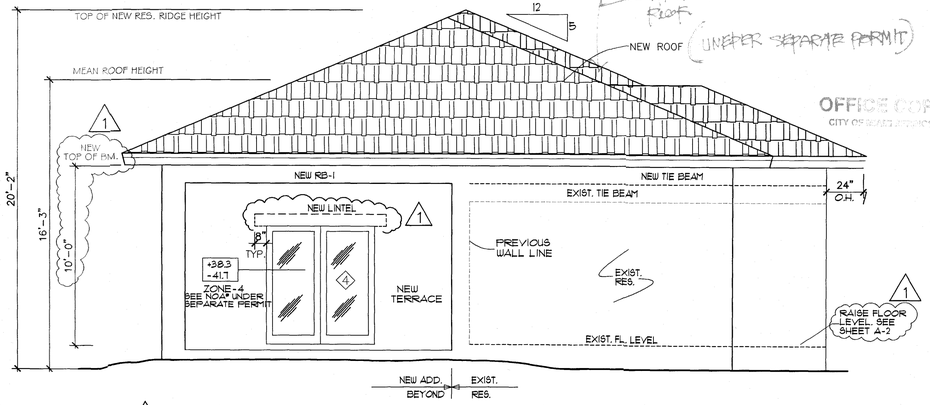

S.W. ELEVATION
(SIDE) SCALE: 1/4"=1'-0"

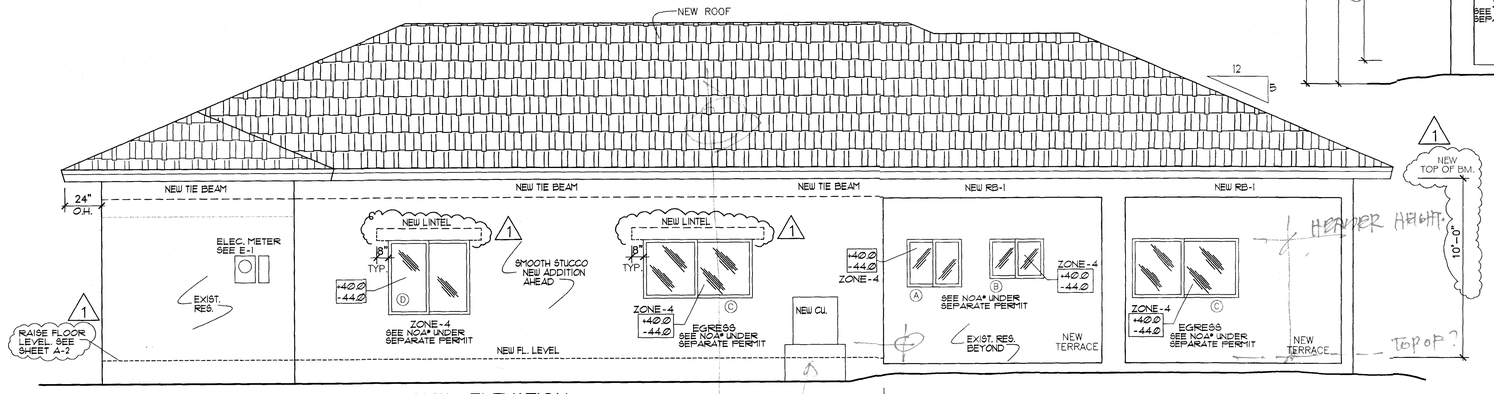

N.W. ELEVATION
(REAR) SCALE: 1/4"=1'-0"

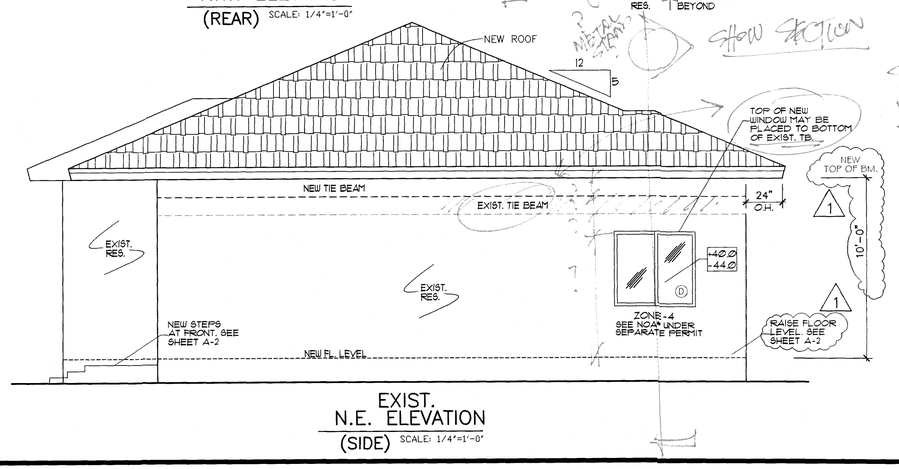

EXIST.
N.E. ELEVATION
(SIDE) SCALE: 1/4"=1'-0"

8" PRECAST U-LINTELS *STANDARD LENGTHS*

OVERALL LENGTH	TOP STEEL	BOTTOM STEEL
3'-0"	2 -7/32" wire	2 -#3 rebar
3'-4"	2 -7/32" wire	2 -#3 rebar
3'-6"	2 -7/32" wire	2 -#3 rebar
4'-0"	2 -7/32" wire	2 -#3 rebar
4'-6"	2 -7/32" wire	2 -#3 rebar
4'-8"	2 -7/32" wire	2 -#3 rebar
5'-4"	2 -7/32" wire	2 -#3 rebar
5'-10"	2 -7/32" wire	2 -#3 rebar
6'-0"	2 -7/32" wire	2 -#4 rebar
6'-6"	2 -7/32" wire	2 -#4 rebar
6'-8"	2 -7/32" wire	2 -#4 rebar
7'-4"	2 -7/32" wire	2 -#4 rebar
7'-6"	2 -7/32" wire	2 -#4 rebar
8'-0"	2 -#3 rebar	2 -#4 rebar
8'-8"	2 -#3 rebar	2 -#4 rebar
9'-4"	2 -#3 rebar	2 -#4 rebar
10'-0"	2 -#3 rebar	2 -#4 rebar
10'-6"	2 -#3 rebar	2 -#4 rebar
10'-8"	2 -#3 rebar	2 -#5 rebar
11'-4"	2 -#3 rebar	2 -#5 rebar
12'-0"	2 -#3 rebar	2 -#5 rebar
13'-4"	2 -#3 rebar	2 -#5 rebar
14'-0"	2 -#3 rebar	2 -#5 rebar

Additional lengths available by special order

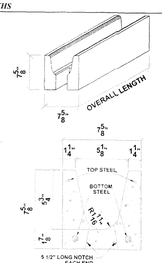

Rebar: ASTM A615 Grade 60
Wire: ASTM A510
Concrete Strength: 4000 psi
Average Self Weight: 33 plf
Finish: Grey Block

8" PRESTRESSED U-LINTELS *STANDARD LENGTHS*

OVERALL LENGTH	TOP STEEL	BOTTOM STEEL
14'-8"	NONE	2 -7/16 strand
15'-4"	NONE	2 -7/16 strand
17'-4"	NONE	2 -7/16 strand
19'-4"	2 -7/32" wire	2 -7/16 strand
21'-4"	2 -7/32" wire	2 -7/16 strand 2 - #4 rebar
22'-0"	2 -7/32" wire	2 -7/16 strand 2 - #4 rebar
24'-0"	2 -7/32" wire	2 -7/16 strand 2 - #4 rebar

Additional lengths available by special order

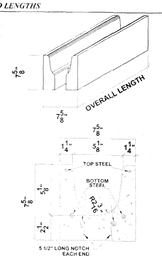

Rebar: ASTM A615 Grade 60
Wire: ASTM A510
Strand: ASTM A416 Grade 270
Concrete Strength: 6000 psi
Synthetic Fibers: 2.5 lbs/yd
Average Self Weight: 37 plf
Finish: Grey Smooth Form

WWW.CASTCRETE.COM © 2010 Cast-Crete USA, Inc.

CITY OF MIAMI SPRINGS
BUILDING DEPARTMENT
FEB 04 2022
RECEIVED

show type of roof (UNDER SEPARATE PERMIT)

OFFICE COPY
CITY OF MIAMI SPRINGS

REWORK

CITY OF MIAMI SPRINGS
APPROVED
FOR PERMIT ONLY

NO.	DATE
1	1-14-22 REVISED TO RAISE EXIST. FL. LEVEL TO 8.0
2	
3	
4	

DESG	DRWN	CHKD	APPV	DATE

PROJECT NAME: ADDITION TO RESIDENCE FOR:
OWNER/PH: AMBAR PREVAL 786-587-7391
ADDRESS: 200 N. ESPLANADE DRIVE, MIAMI SPRINGS, FLORIDA 33166
PROJECT ADD: SAME

Guillermo Ramon Gonzalez
9000 SW. 168th Avenue Miami Florida 33196 Ph:305-484-8171
Registered Architect #13960 Ph:786-237-5154 (assistant)

101521

A-4

STATE OF FLORIDA
GUILLERMO RAMON GONZALEZ
No. AR0013960
Seal
REGISTERED ARCHITECT

Guillermo Ramon Gonzalez
R.A. 13960
STATE OF FLORIDA

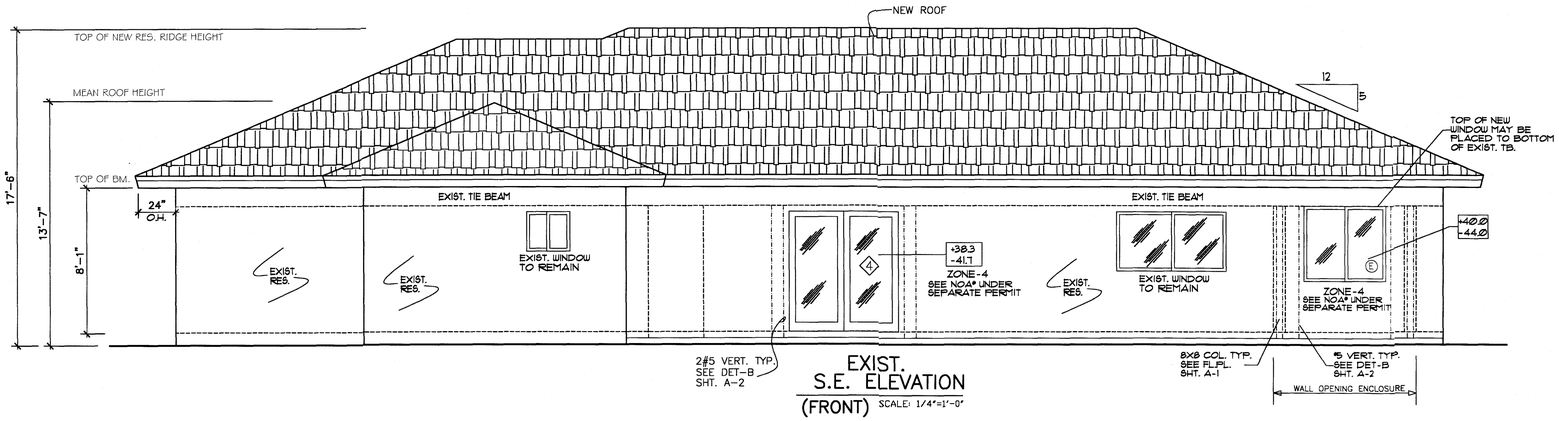

EXIST. S.E. ELEVATION (FRONT)
SCALE: 1/4"=1'-0"

NOTE: ALL EXTERIOR WALL COVERING AND ROOF ASSEMBLIES AND ROOF TOP STRUCTURES SHALL COMPLY WITH HI-VELOCITY HURRICANE ZONE AS PER CHAPTER 44 , R4401.1 & R4402.1 OF THE F.B.C. RESIDENTIAL 2020 - 7TH EDITION.

NOTE:
ALL WINDOWS, DOORS AND/OR ANY OTHER COMPONENTS INSTALLATION SHALL BE IN ACCORDANCE W/ MANUFACTURER'S SPECIFICATIONS SET FORTH IN THE APPROVED PRODUCT CONTROL APPROVAL.

NOTE: OWNER/G.C. TO VERIFY ALL NEW & WINDOWS/DOOR SIZES TO BE REMOVED/REPLACED

WINDOW SCHEDULE

NOTE: ALL WINDOW SIZES TO BE VERYFIED IN FIELD & WITH WINDOW MANUFG. PRIOR TO COMPONENT FABRICATION & INSTALLATION.

MARK	OPENING WIDTH	OPENING HEIGTH	CODE	TYPE	AREA (SF)	MATERIAL	REMARKS ALL NEW WINDOWS TO BE IMPACT RESISTANT
A	37	38 3/8"	3030	HORZ. ROLLER	9.60	ALUM./GLASS	SEE N.O.A. SEPARATE PERMIT
B	37	26	3020	HORZ. ROLLER	6.20	ALUM./GLASS	SEE N.O.A. TEMP. CAT-2 FROSTED
C	74-1/8	38 3/8"	6030	HORZ. ROLLER	20.20	ALUM./GLASS	SEE N.O.A. EGRESS
D	53 1/8	50 5/8	6040	HORZ. ROLLER	18.75	ALUM./GLASS	SEE N.O.A. EGRESS
E							

NOTE: ALL NEW WINDOWS & EXTERIOR DOOR TO BE IMPACT RESISTANT SEE NOAS.

WINDOW U VALUE 1.20
WINDOW shgc U VALUE 0.45

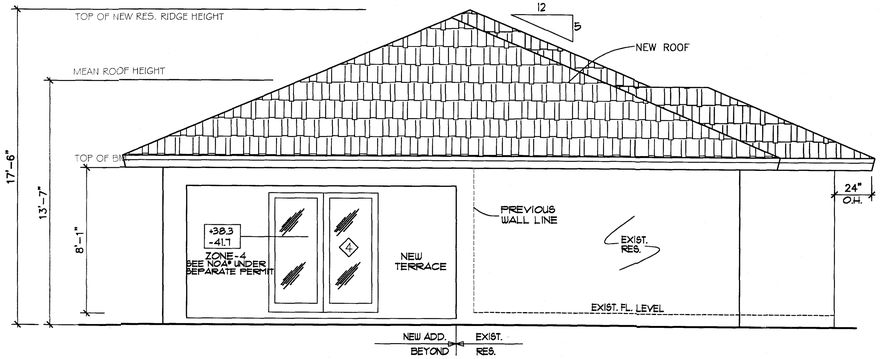

S.W. ELEVATION (SIDE)
SCALE: 1/4"=1'-0"

NOTE: ALL NEW WINDOWS & EXTERIOR DOORS TO BE IMPACT RESISTANT SEE NOAS. ALSO TO BE UNDER A SEPARATE SUB PERMIT. NOT A PART OF THIS PERMIT.

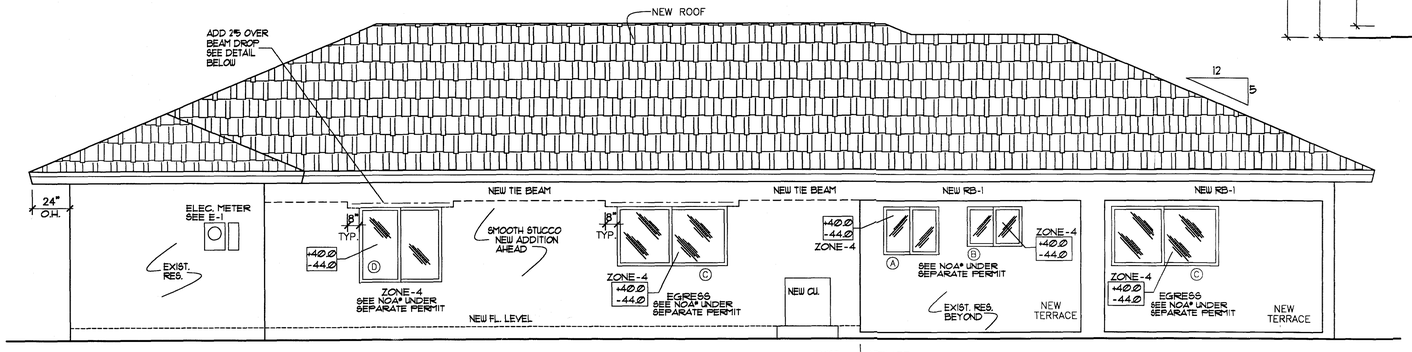

N.W. ELEVATION (REAR)
SCALE: 1/4"=1'-0"

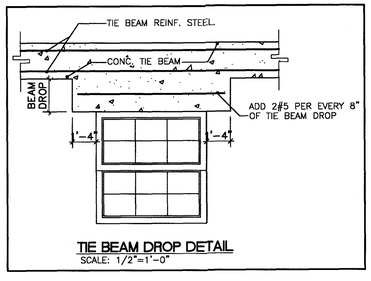

TIE BEAM DROP DETAIL
SCALE: 1/2"=1'-0"

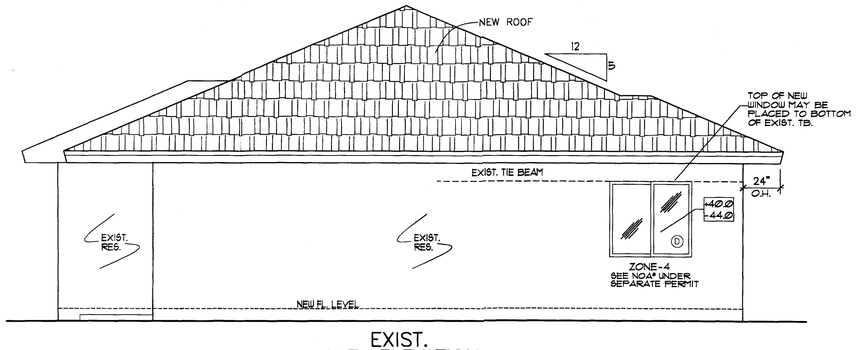

EXIST. N.E. ELEVATION (SIDE)
SCALE: 1/4"=1'-0"

CITY OF MIAMI SPRINGS
APPROVED
FOR PERMIT ONLY

STATE OF FLORIDA
GUILLERMO RAMON GONZALEZ
LICENSE AR0013960
REGISTERED ARCHITECT

Guillermo Ramon Gonzalez
R.A. 13960
STATE OF FLORIDA

NO.	DATE
1	
2	
3	
4	

DES'D	DRAWN	CHK'D	APP'D	DATE

PROJECT NAME: ADDITION TO RESIDENCE FOR:
OWNER/PH: AMBAR PREVAL 786-587-7391
ADDRESS:200 N. ESPLANADE DRIVE MIAMI SPRINGS, FLORIDA 33166
PROJECT ADD: SAME

Guillermo Ramon Gonzalez
9000 SW. 168th Avenue Miami Florida 33196 Ph:305-484-8171
Registered Architect #13960 Ph:786-237-5154 (assistant)

101521

A-4

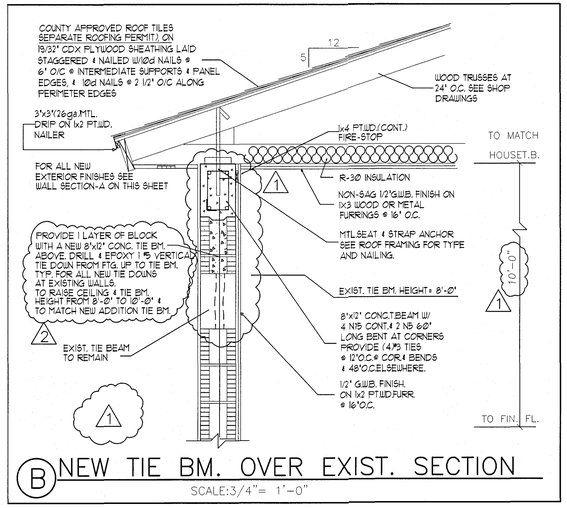

(B) NEW TIE BM. OVER EXIST. SECTION

SCALE:3/4"= 1'-0"

BEAM SCHEDULE:

TB AT (8'-0") A.F.F.) =8"x12" CONCRETE BEAM WITH 4#5 CONT. & (2) 60" LONG BENT BARS AT CORNERS. PROVIDE #3 TIES (4) FROM CORNERS AT 12" REM. AT 48"O.C.
ALL NEW TIE BEAMS TO MATCH EXISTING TB. ELEVATION

RB-1 AT (8'-0") A.F.F.) =8"x12" CONCRETE BEAM WITH 2#5 TOP, 2#5 BOT. WITH (2) #5 60" LONG LONG BENT BARS AT CORNERS. PROVIDE #3 TIES (4) FROM CORNERS AT 3" REM. AT 5 "O.C.

ROOF VENTILATION CALCULATIONS: FOR TRUSS PORTION ONLY

(SOFFIT) (RIDGE) OPTIONAL (NOT PROVIDED)

REQUIRED 1/150 VENT TO CEILING RATIO
NEW TRUSS ROOF AREA = 2,950 SQ. FT. "WITH OVERHANG"
2,950/150 = 19.66 SQ. FT. OF VENTING AREA REQUIRED
DESIGN SELECTION: 4"X24" ALUMN. SCREEN = 0.66 S.Q. FT.
TOTAL REQ'D. 19.66 S.Q. FT. / 0.66 = 30 PCS.
PROPOSED PROVIDED: 32 PCS.

FOR WOOD AND FRAMING NOTES SEE SHEET A-3

GRAVITY & UPLIFT LOADS

A	GRAVITY: 488# NET UPLIFT: 415# USE (1)-NVST.A16 BY 'NU-VUE' WITH 9-10Gd NAILS @ STRAP & 6-10Gd NAILS @ SEAT N.O.A.# 20-0901.05	E	GRAVITY: 2,340# NET UPLIFT: 2,088# USE (1)SPECIAL BRACKET SEE DETAIL SHEET A-3 ALSO USE AT OTHER SIDE
B	GRAVITY: 1,620# (DOUBLE STRAP) NET UPLIFT: 1,188# USE (1)-NVHTA24 BY 'NU-VUE' WITH 18-10Gd NAILS @ 2-STRAPS & 6-10Gd NAILS @ SEAT N.O.A.# 20-0901.05	G	GRAVITY: 965# NET UPLIFT: 930# USE (1)-NVST.A16 BY 'NU-VUE' WITH 9-10Gd NAILS @ STRAP & 6-10Gd NAILS @ SEAT N.O.A.# 20-0901.05
C	GRAVITY: 1,210# NET UPLIFT: 1,210# USE (1)-NVST.A16 BY 'NU-VUE' WITH 9-10Gd NAILS @ STRAP & 6-10Gd NAILS @ SEAT N.O.A.# 20-0901.05	F	GRAVITY: 1,660# (DOUBLE STRAP) NET UPLIFT: 1,130# USE (1)-NVHTA24 BY 'NU-VUE' WITH 18-10Gd NAILS @ 2-STRAPS & 6-10Gd NAILS @ SEAT N.O.A.# 20-0901.05
D	GRAVITY: 3,970# NET UPLIFT: 3,970# USE (1)SPECIAL BRACKET SEE DETAIL SHEET A-3 ALSO USE AT OTHER SIDE	H	GRAVITY: 2,520# (DOUBLE STRAP) NET UPLIFT: 1,820# USE (1)-NVHTA24 BY 'NU-VUE' WITH 18-10Gd NAILS @ 2-STRAPS & 6-10Gd NAILS @ SEAT N.O.A.# 20-0901.05
J	GRAVITY: 835# NET UPLIFT: 760# USE (1)-NVST.A16 BY 'NU-VUE' WITH 9-10Gd NAILS @ STRAP & 6-10Gd NAILS @ SEAT N.O.A.# 20-0901.05	I	GRAVITY: 2,840# (DOUBLE STRAP) NET UPLIFT: 2,275# USE (1)-NVHTA24 BY 'NU-VUE' WITH 18-10Gd NAILS @ 2-STRAPS & 6-10Gd NAILS @ SEAT N.O.A.# 20-0901.05

I CERTIFY THIS IS BEING DESIGNED TO WITHSTAND 175 MPH WIND SPEED ACCORDING TO ASCE 7-16 AS REQUIRED BY THE FLORIDA BUILDING CODE REVISED 2020 EDITION 7th EDITION

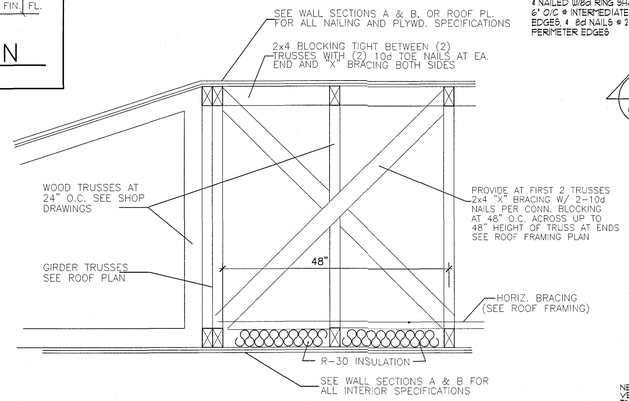

TYP. CROSS BRACING SECTION

SCALE: 3/4"= 1'-0"

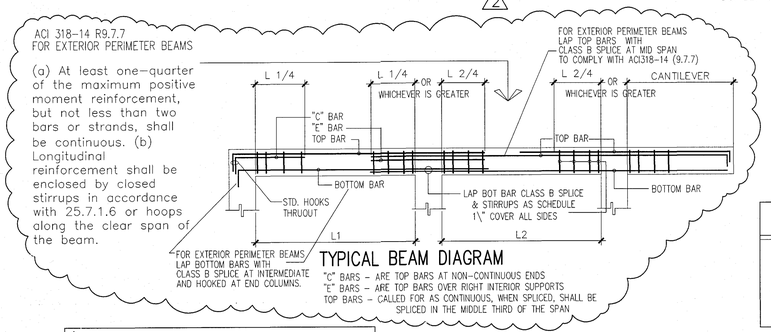

TYPICAL BEAM DIAGRAM

"C" BARS – ARE TOP BARS AT NON-CONTINUOUS ENDS
"E" BARS – ARE TOP BARS OVER RIGHT INTERIOR SUPPORTS
TOP BARS – CALLED FOR AS CONTINUOUS, WHEN SPLICED, SHALL BE SPLICED IN THE MIDDLE THIRD OF THE SPAN

WOOF TRUSS ROOF DESIGN LOADS:

T.C.L.L.---------- = 30 P.S.F.
T.C.D.L.---------- = 15 P.S.F.
B.C.D.L.---------- = 10 P.S.F.

TOTAL ---------- = 55 P.S.F.
THIS IS A ROOF TRUSS TYPE SYSTEM

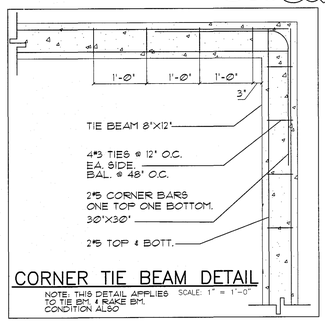

CORNER TIE BEAM DETAIL

NOTE: THIS DETAIL APPLIES TO TIE BM. & RAKE BM. CONDITION ALSO

SCALE: 1" = 1'-0"

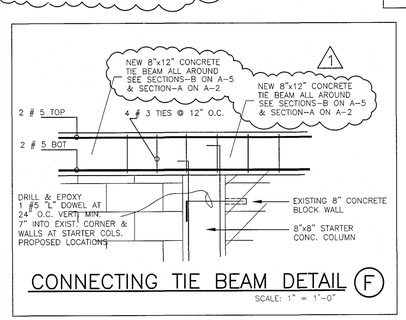

CONNECTING TIE BEAM DETAIL (F)

SCALE: 1" = 1'-0"

NOTE: ROOF TRUSS SHOP DRAWINGS AND ENGINEERING PACKAGE TO BE SUBMITTED AND PROCESSED UNDER A SEPARATE PERMIT.

NOTE: ALL NEW ROOFING SYSTEM-MATERIALS TO HAVE A VALID N.O.A., PRODUCT APPROVALS & TO BE SUBMITTED FOR REVIEW AT TIME OF ROOFING PERMIT APPLICATION UNDER SEPARATE SUB PERMIT.

NOTE: ALL EXTERIOR WALL COVERING AND ROOF ASSEMBLIES AND ROOF TOP STRUCTURES SHALL COMPLY WITH HI-VELOCITY HURRICANE ZONE AS PER CHAPTER 44 , R4401.1 & R4402.1 OF THE F.B.C. RESIDENTIAL 2020 -7th EDITION.

NOTE: GENERAL CONTRACTOR TO FIELD VERIFY ALL EXISTING FIELD CONDITIONS & DIMENSIONS WITH ALL PROPOSED NEW CONSTRUCTION PRIOR TO ANY NEW CONSTRUCTION FABRICATION OR INSTALLATIONS INCLUDING BUT NOT LIMITED TO: NEW TRUSS SIZES, PITCH LENGTHS DIMENSIONS, ETC.

NOTE: FOR ALL STRAPS SPECIFIED SEE SPECS ON PRODUCT APPROVAL ATTACHED ALL STRAPS TO BE BY 'NU-VUE' OR APPROVED EQUAL

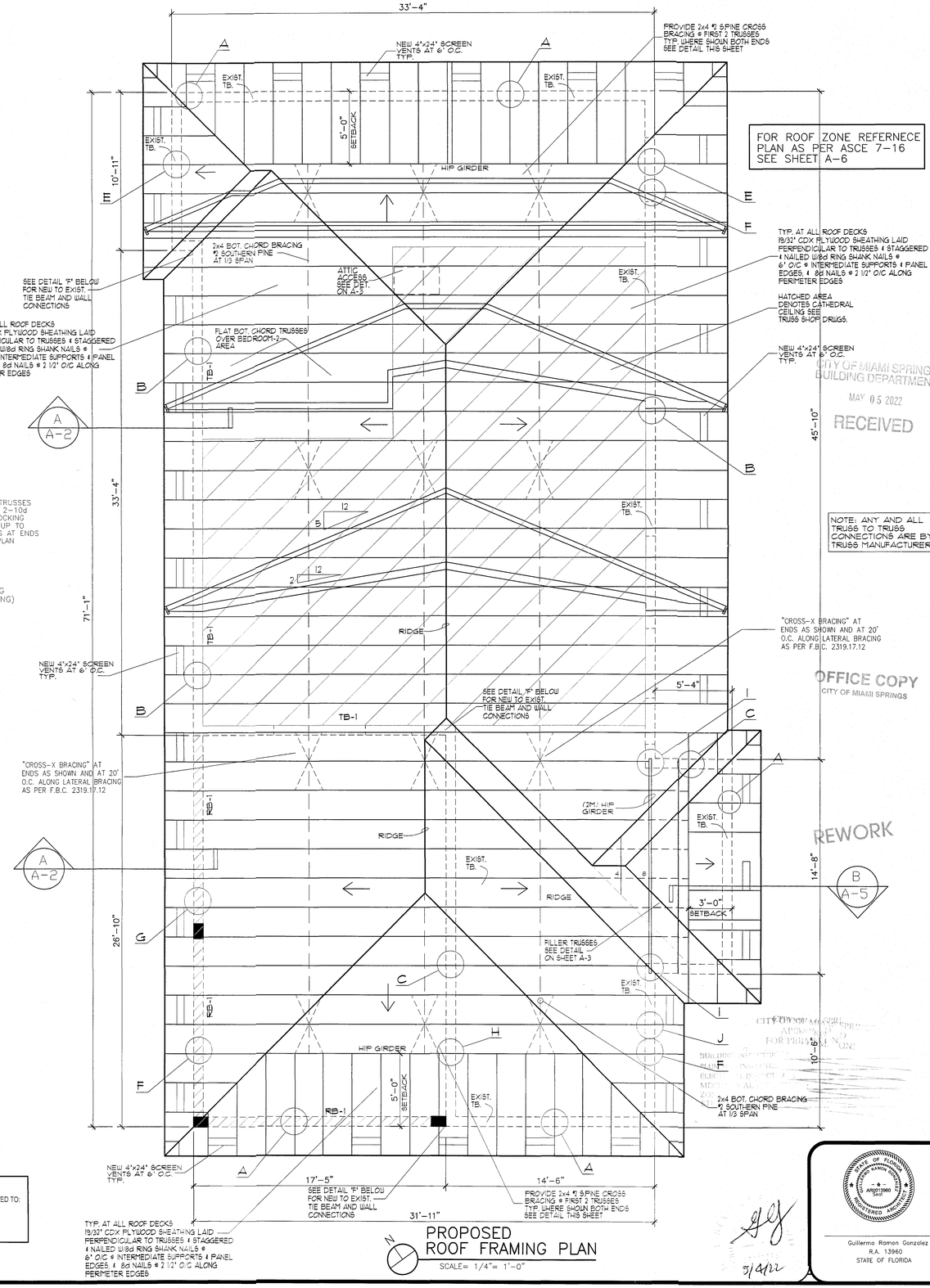

PROPOSED ROOF FRAMING PLAN

SCALE= 1/4"= 1'-0"

CITY OF MIAMI SPRINGS BUILDING DEPARTMENT
MAY 05 2022
RECEIVED

OFFICE COPY
CITY OF MIAMI SPRINGS

CITY OF MIAMI SPRINGS APPROVED FOR PERMIT ISSUANCE BUILDING SECTION PLUMBING ELECTRICAL MECHANICAL ZONING

NO.	DATE
1	2-1-22 REVISED TO RAISE EXIST. FL. LEVEL TO 8.0
2	4-25-22 REVISED TO RAISE EXIST. FL. LEVEL TO 8.0
3	.
4	.

DESIG	DRWN	CHKD	APRV	DATE
.	.	.	.	.

PROJECT NAME: ADDITION TO RESIDENCE FOR:
OWNER/PH: AMBAR PREVAL 786-587-7391
ADDRESS:200 N. ESPLANADE DRIVE MIAMI SPRINGS, FLORIDA 33166
PROJECT ADD: SAME

Guillermo Ramon Gonzalez
9000 SW. 168th Avenue Miami Florida 33196 Ph:305-484-8171 Ph:786-237-5154 (assistant)
Registered Architect #13960

Guillermo Ramon Gonzalez
R.A. 13960
STATE OF FLORIDA

3/4/22

101521

A-5

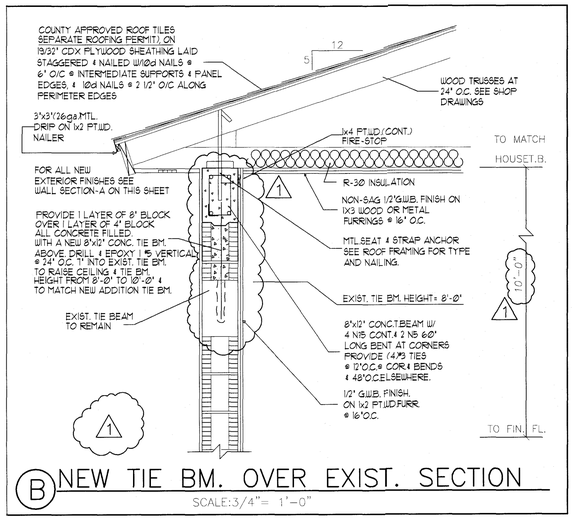

(B) NEW TIE BM. OVER EXIST. SECTION

SCALE:3/4"= 1'-0"

GRAVITY & UPLIFT LOADS

A	GRAVITY: 318# NET UPLIFT: 325# USE 2-NVRT36 BY "NU-VUE" WITH 12-16d NAILS @ STRAP & (8) 1/4"x 1 1/2"LONG TAPCON SCREWS AT EA. STRAP TO EXIST. SIDE OF TB. CONNECTION	E	GRAVITY: 3,175# NET UPLIFT: 3,150# USE (1)SPECIAL BRACKET SEE DETAIL SHEET A-3 ALSO USE AT OTHER SIDE
B	GRAVITY: 2,305# NET UPLIFT: 2,450# USE (1)-NVHTA30 BY "NU-VUE" WITH (8)-10d. NAILS @ 2-STRAPS & (8)-16d NAILS @ SEAT N.O.A.# 20-0901.05	BB	GRAVITY: 2,305# (DOUBLE STRAP) NET UPLIFT: 2,450# (DOUBLE STRAP) USE 2-NVRT48 BY "NU-VUE" WITH 12-16d NAILS @ EACH STRAP & (8) 1/4"x 1 1/2"LONG TAPCON SCREWS AT EA. STRAP TO EXIST. SIDE OF TB. CONNECTION
C	GRAVITY: 1,210# NET UPLIFT: 1,230# USE 2-NVRT36 BY "NU-VUE" WITH 12-16d NAILS @ STRAP & (8) 1/4"x 1 1/2"LONG TAPCON SCREWS AT EA. STRAP TO EXIST. SIDE OF TB. CONNECTION		
D	GRAVITY: 3,937# NET UPLIFT: 3,970# USE (1)SPECIAL BRACKET SEE DETAIL SHEET A-3 ALSO USE AT OTHER SIDE		

I CERTIFY THIS IS BEING DESIGNED TO WITHSTAND 175 MPH WIND SPEED ACCORDING TO ASCE 7-16 AS REQUIRED BY THE FLORIDA BUILDING CODE REVISED 2020 EDITION 7th EDITION

BEAM SCHEDULE:

TB AT (8'-0") A.F.F.) =8"x12" CONCRETE BEAM WITH 4#5 CONT. & (2) 60° LONG BENT BARS AT CORNERS. PROVIDE #3 TIES (4) FROM CORNERS AT 12" REM. AT 48"O.C.
ALL NEW TIE BEAMS TO MATCH EXISTING TB. ELEVATION

RB-1 AT (8'-0") A.F.F.) =8"x12" CONCRETE BEAM WITH 2#5 TOP, 2#5 BOT. WITH (2) #5 60° LONG LONG BENT BARS AT CORNERS. PROVIDE #3 TIES (4) FROM CORNERS AT 3" REM. AT 5 "O.C.

ROOF VENTILATION CALCULATIONS: FOR TRUSS PORTION ONLY

(SOFFIT) (RIDGE) OPTIONAL (NOT PROVIDED)

REQUIRED 1/150 VENT TO CEILING RATIO
NEW TRUSS ROOF AREA = 2,950 SQ. FT. "WITH OVERHANG"
2,950/150 = 19.66 SQ. FT. OF VENTING AREA REQUIRED
DESIGN SELECTION: 4"X24" ALUMN. SCREEN = 0.66 S.Q. FT.
TOTAL REQ'D. 19.66 S.Q. FT. / 0.66 = 30 PCS.
PROPOSED PROVIDED: 32 PCS.

FOR WOOD AND FRAMING NOTES SEE SHEET A-3

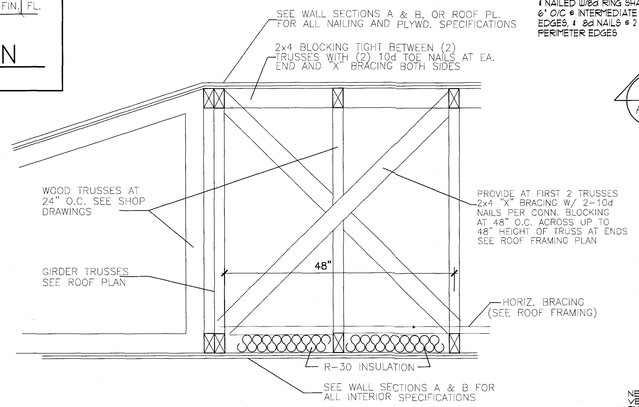

TYP. CROSS BRACING SECTION

SCALE: 3/4"= 1'-0"

ACI 318-14 R9.7.7
FOR EXTERIOR PERIMETER BEAMS

(a) At least one-quarter of the maximum positive moment reinforcement, but not less than two bars or strands, shall be continuous. (b) Longitudinal reinforcement shall be enclosed by closed stirrups in accordance with 25.7.1.6 or hoops along the clear span of the beam.

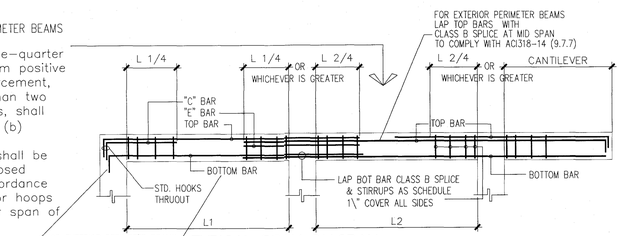

TYPICAL BEAM DIAGRAM

"C" BARS – ARE TOP BARS AT NON-CONTINUOUS ENDS
"E" BARS – ARE TOP BARS OVER RIGHT INTERIOR SUPPORTS
TOP BARS – CALLED FOR AS CONTINUOUS, WHEN SPLICED, SHALL BE SPLICED IN THE MIDDLE THIRD OF THE SPAN

WOOF TRUSS ROOF DESIGN LOADS:

T.C.L.L.	= 30 P.S.F.
T.C.D.L.	= 15 P.S.F.
B.C.D.L.	= 10 P.S.F.
TOTAL	= 55 P.S.F.

THIS IS A ROOF TRUSS TYPE SYSTEM

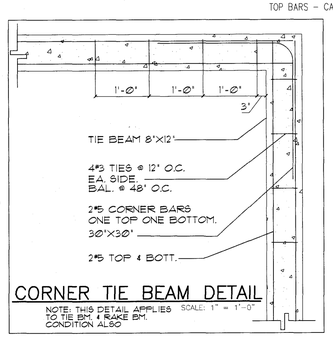

CORNER TIE BEAM DETAIL

NOTE: THIS DETAIL APPLIES TO TIE BM. & RAKE BM. CONDITION ALSO SCALE: 1" = 1'-0"

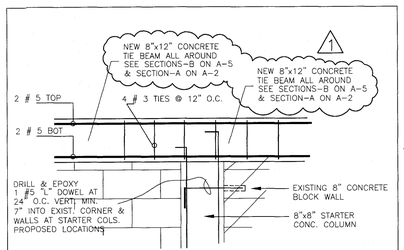

CONNECTING TIE BEAM DETAIL (F)

SCALE: 1" = 1'-0"

NOTE: ROOF TRUSS SHOP DRAWINGS AND ENGINEERING PACKAGE TO BE SUBMITTED AND PROCESSED UNDER A SEPARATE PERMIT.

NOTE: ALL NEW ROOFING SYSTEM-MATERIALS TO HAVE A VALID N.O.A., PRODUCT APPROVALS & TO BE SUBMITTED FOR REVIEW AT TIME OF ROOFING PERMIT APPLICATION UNDER SEPARATE SUB PERMIT.

OK, BUT SHOW TYPE OF ROOF SYSTEM ON ELEVATIONS.

NOTE: ALL EXTERIOR WALL COVERING AND ROOF ASSEMBLIES AND ROOF TOP STRUCTURES SHALL COMPLY WITH HI-VELOCITY HURRICANE ZONE AS PER CHAPTER 44 , R4401.1 & R4402.1 OF THE F.B.C. RESIDENTIAL 2020 -7th EDITION.

NOTE: GENERAL CONTRACTOR TO FIELD VERIFY ALL EXISTING FIELD CONDITIONS & DIMENSIONS WITH ALL PROPOSED NEW CONSTRUCTION PRIOR TO ANY NEW CONSTRUCTION FABRICATION OR INSTALLATIONS INCLUDING BUT NOT LIMITED TO: NEW TRUSS SIZES, PITCH LENGTHS DIMENSIONS, ETC.

NOTE: FOR ALL STRAPS SPECIFIED SEE SPECS ON PRODUCT APPROVAL ATTACHED ALL STRAPS TO BE BY "NU-VUE" OR APPROVED EQUAL

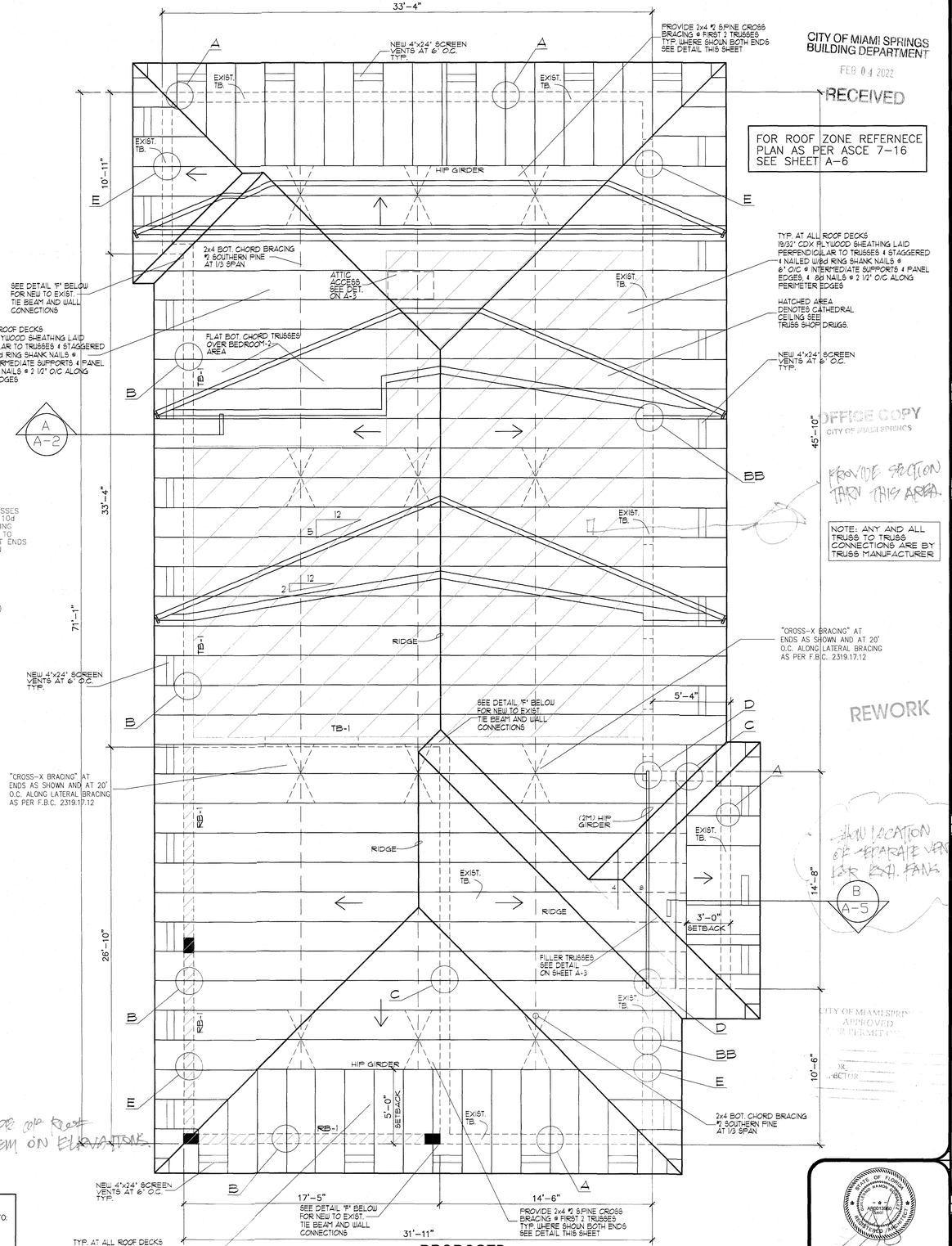

PROPOSED ROOF FRAMING PLAN

SCALE= 1/4"= 1'-0"

CITY OF MIAMI SPRINGS BUILDING DEPARTMENT
FEB 04 2022
RECEIVED

FOR ROOF ZONE REFERNECE PLAN AS PER ASCE 7-16 SEE SHEET A-6

REWORK

SHOW LOCATION OF SEPARATE VENTS FOR EXH. FANS

OFFICE COPY CITY OF MIAMI SPRINGS

CITY OF MIAMI SPRINGS APPROVED FOR PERMIT ISSUANCE
BY
DIRECTOR

NO.	DATE
1	2-1-22 REVISED TO RAISE EXIST. FL. LEVEL TO 8.0
2	
3	
4	

DESIG. • DRWN. • CHKD. • APPV. • DATE •

PROJECT NAME: ADDITION TO RESIDENCE FOR:
OWNER/PH: AMBAR PREVAL 786-587-7391
ADDRESS:200 N. ESPLANADE DRIVE MIAMI SPRINGS, FLORIDA 33166
PROJECT ADD: SAME

Guillermo Ramon Gonzalez
9000 SW. 168th Avenue Miami Florida 33196
Registered Architect #13960
Ph:305-484-8171
Ph:786-237-5154 (assistant)

STATE OF FLORIDA
GUILLERMO RAMON GONZALEZ
ARCHITECT
No. AR0013960

Guillermo Ramon Gonzalez
R.A. 13960
STATE OF FLORIDA

101521

A-5

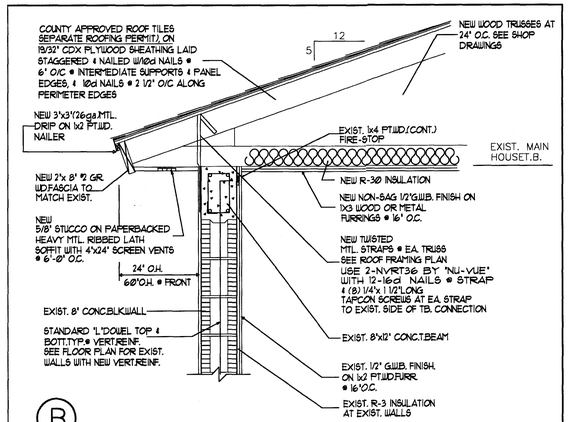

B

NEW ROOF TRUSSES OVER EXIST. WALLS

SCALE:3/4"= 1'-0"

GRAVITY & UPLIFT LOADS

A	GRAVITY: 315# NET UPLIFT: 325# USE 2-NVRT36 BY "NU-VUE" WITH 12-16d NAILS @ STRAP & (8) 1/4"x 1 1/2"LONG TAPCON SCREWS AT EA. STRAP TO EXIST. SIDE OF TB. CONNECTION	E	GRAVITY: 3,150# NET UPLIFT: 3,150# USE (1)SPECIAL BRACKET SEE DETAIL SHEET A-3 ALSO USE AT OTHER SIDE
B	GRAVITY: 2,325# (DOUBLE STRAP) NET UPLIFT: 2,450# USE (1)-NVHTA20 BY "NU-VUE" WITH 18-10d NAILS @ 2-STRAPS & 6-16d NAILS @ SEAT N.O.A.# 22-0920.05	BB	GRAVITY: 2,325# (DOUBLE STRAP) NET UPLIFT: 2,450# USE 2-NVRT48 BY "NU-VUE" WITH 12-16d NAILS @ EACH STRAP & (8) 1/4"x 1 1/2"LONG TAPCON SCREWS AT EA. STRAP TO EXIST. SIDE OF TB. CONNECTION
C	GRAVITY: 1,200# NET UPLIFT: 1,200# USE 2-NVRT36 BY "NU-VUE" WITH 12-16d NAILS @ STRAP & (8) 1/4"x 1 1/2"LONG TAPCON SCREWS AT EA. STRAP TO EXIST. SIDE OF TB. CONNECTION		
D	GRAVITY: 3,970# NET UPLIFT: 3,970# USE (1)SPECIAL BRACKET SEE DETAIL SHEET A-3 ALSO USE AT OTHER SIDE		

I CERTIFY THIS IS BEING DESIGNED TO WITHSTAND 175 MPH WIND SPEED ACCORDING TO ASCE 7-16 AS REQUIRED BY THE FLORIDA BUILDING CODE REVISED 2020 EDITION 7th EDITION

BEAM SCHEDULE:

TB AT (8'-0") A.F.F.) =8"x12" CONCRETE BEAM WITH 4#5 CONT. & (2) 60" LONG BENT BARS AT CORNERS. PROVIDE #3 TIES (4) FROM CORNERS AT 12" REM. AT 48"O.C.
ALL NEW TIE BEAMS TO MATCH EXISTING TB. ELEVATION

RB-1 AT (8'-0") A.F.F.) =8"x12" CONCRETE BEAM WITH 2#5 TOP, 2#5 BOT. WITH (2) #5 60" LONG LONG BENT BARS AT CORNERS. PROVIDE #3 TIES (4) FROM CORNERS AT 3" REM. AT 5 "O.C.

ROOF VENTILATION CALCULATIONS: FOR TRUSS PORTION ONLY

(SOFFIT) (RIDGE) OPTIONAL (NOT PROVIDED)

REQUIRED 1/150 VENT TO CEILING RATIO
NEW TRUSS ROOF AREA = 2,950 SQ. FT. "WITH OVERHANG"
2,950/150 = 19.66 SQ. FT. OF VENTING AREA REQUIRED
DESIGN SELECTION: 4"X24" ALUMN. SCREEN = 0.66 S.Q. FT.
TOTAL REQ'D. 19.66 S.Q. FT. / 0.66 = 30 PCS.
PROPOSED PROVIDED: 32 PCS.

FOR WOOD AND FRAMING NOTES SEE SHEET A-3

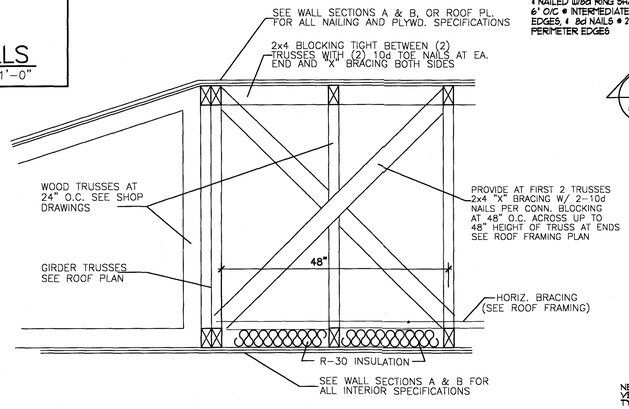

TYP. CROSS BRACING SECTION

SCALE: 3/4"= 1'-0"

ACI 318-14 R9.7.7
FOR EXTERIOR PERIMETER BEAMS

(a) At least one-quarter of the maximum positive moment reinforcement, but not less than two bars or strands, shall be continuous. (b) Longitudinal reinforcement shall be enclosed by closed stirrups in accordance with 25.7.1.6 or hoops along the clear span of the beam.

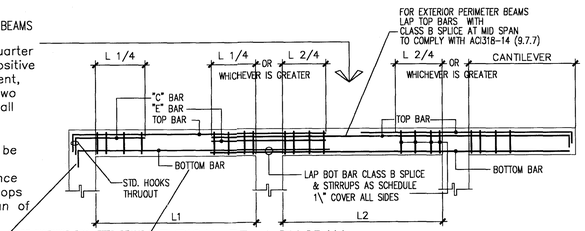

TYPICAL BEAM DIAGRAM

"C" BARS – ARE TOP BARS AT NON-CONTINUOUS ENDS
"E" BARS – ARE TOP BARS OVER RIGHT INTERIOR SUPPORTS
TOP BARS – CALLED FOR AS CONTINUOUS, WHEN SPLICED, SHALL BE SPLICED IN THE MIDDLE THIRD OF THE SPAN

WOOF TRUSS ROOF DESIGN LOADS:

T.C.L.L.---------- = 30 P.S.F.
T.C.D.L.---------- = 15 P.S.F.
B.C.D.L.---------- = 10 P.S.F.

TOTAL ---------- = 55 P.S.F.
THIS IS A ROOF TRUSS TYPE SYSTEM

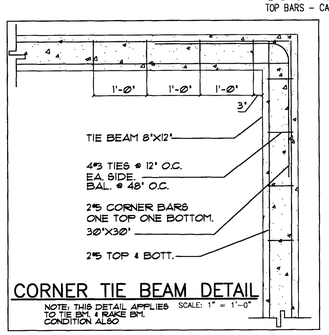

CORNER TIE BEAM DETAIL

NOTE: THIS DETAIL APPLIES TO TIE BM. & RAKE BM. CONDITION ALSO

SCALE: 1" = 1'-0"

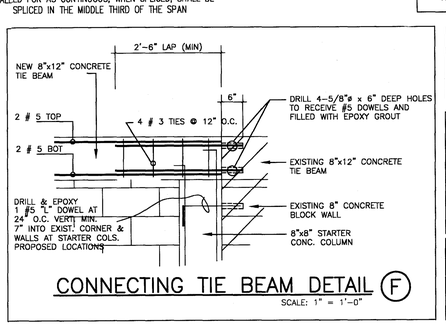

CONNECTING TIE BEAM DETAIL (F)

SCALE: 1" = 1'-0"

NOTE: ROOF TRUSS SHOP DRAWINGS AND ENGINEERING PACKAGE TO BE SUBMITTED AND PROCESSED UNDER A SEPARATE PERMIT.

NOTE: ALL NEW ROOFING SYSTEM-MATERIALS TO HAVE A VALID N.O.A., PRODUCT APPROVALS & TO BE SUBMITTED FOR REVIEW AT TIME OF ROOFING PERMIT APPLICATION UNDER SEPARATE SUB PERMIT.

NOTE: ALL EXTERIOR WALL COVERING AND ROOF ASSEMBLIES AND ROOF TOP STRUCTURES SHALL COMPLY WITH HI-VELOCITY HURRICANE ZONE: AS PER CHAPTER 44 , R4401.1 & R4402.1 OF THE F.B.C. RESIDENTIAL 2020 -7th EDITION.

NOTE: GENERAL CONTRACTOR TO FIELD VERIFY ALL EXISTING FIELD CONDITIONS & DIMENSIONS WITH ALL PROPOSED NEW CONSTRUCTION PRIOR TO ANY NEW CONSTRUCTION FABRICATION OR INSTALLATIONS INCLUDING BUT NOT LIMITED TO: NEW TRUSS SIZES, PITCH LENGTHS DIMENSIONS, ETC.

NOTE: FOR ALL STRAPS SPECIFIED SEE SPECS ON PRODUCT APPROVAL ATTACHED ALL STRAPS TO BE BY "NU-VUE" OR APPROVED EQUAL

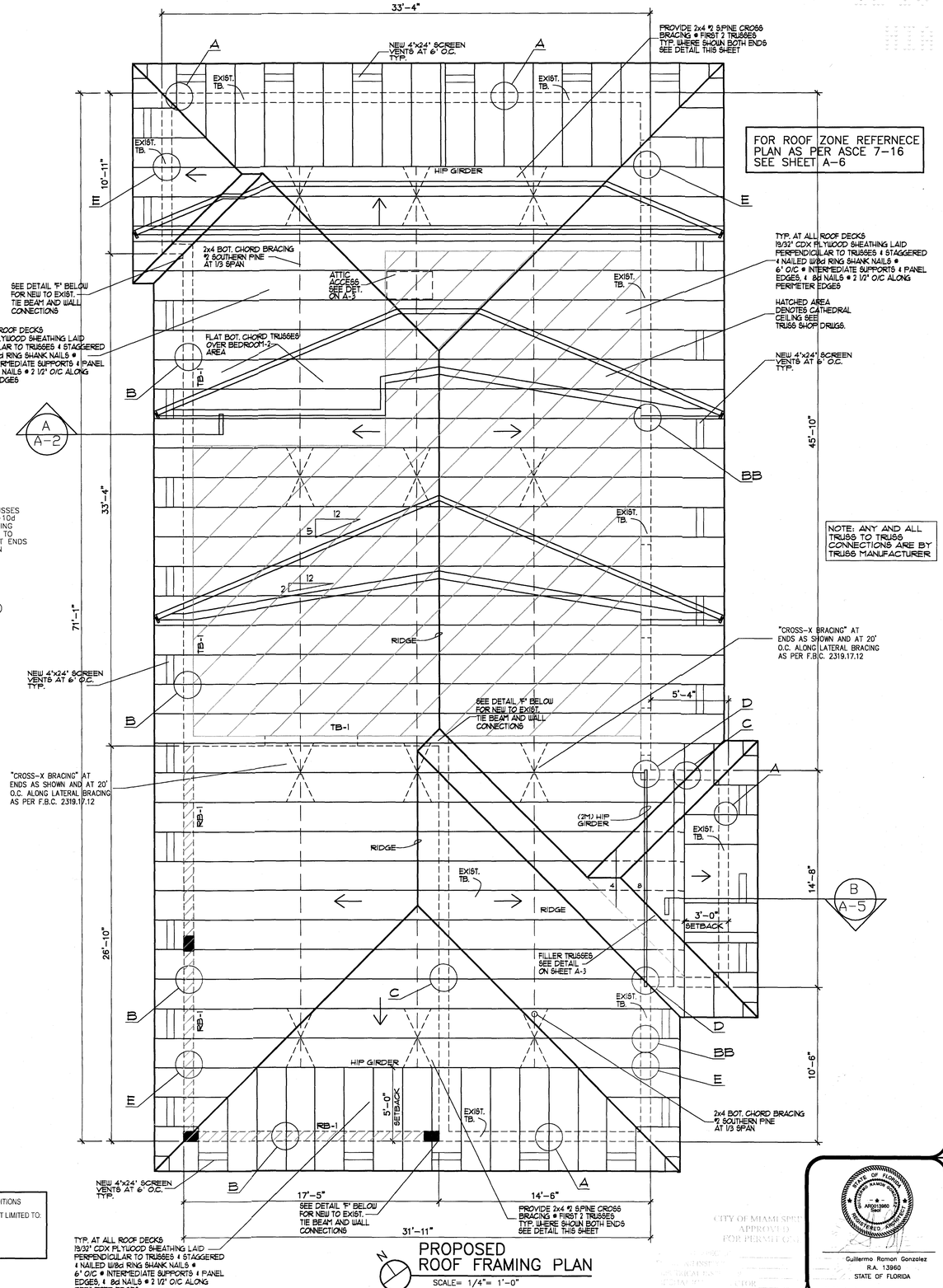

PROPOSED ROOF FRAMING PLAN

SCALE= 1/4"= 1'-0"

CITY OF MIAMI SPECIAL APPROVED FOR PERMIT

Guillermo Ramon Gonzalez
R.A. 13960
STATE OF FLORIDA

NO.	DATE
1	
2	
3	
4	

DESG	DRWN	CHKD	APRV	DATE

PROJECT NAME: ADDITION TO RESIDENCE FOR:
OWNER/PH: AMBAR PREVAL 786-587-7391
ADDRESS:200 N. ESPLANADE DRIVE MIAMI SPRINGS, FLORIDA 33166
PROJECT ADD: SAME

Guillermo Ramon Gonzalez
9000 SW. 168th Avenue Miami Florida 33196 Ph:305-484-8171 Ph:786-237-5154 (assistant)
Registered Architect #13960

101521

A-5

ELECTRICAL NOTES:

1. ALL WORK SHALL BE PERFORMED IN ACCORDANCE WITH THE LATEST EDITION OF THE NEC, & NFPA-70 AND ALL OTHER PERTAINING CODES AND REGULATIONS ESTABLISHED BY AUTHORITIES HAVING JURISDICTION, AND SHALL MEET THE REQUIREMENTS OF OTHER RECOGNIZED STANDARDS AS THE ASTM,IEEE,NFPA AND NEMA,WHERE THE REQUIREMENTS OF SUCH STANDARDS ARE MORE STRINGENT THAN THOSE CITED ABOVE.
2. ALL WORK SHALL BE PERFORMED BY A LICENSED ELECTRICAL CONTRACTOR IN A FIRST CLASS MANNER, FULLY OPERATIVE, AND TO THE ACCEPTANCE OF THE OWNER AND THE ENGINEER.
3. ALL ELECTRICAL MATERIALS AND EQUIPMENT SHALL BE APPROVED BY U.L.AND SHALL BEAR THE U.L.LABEL.
4. THE PLANS ARE GENERALLY DIAGRAMMATIC AND THE CONTRACTOR SHALL COORDINATE HIS WORK WITH THE WORK OF OTHER TRADES SO THAT INTERFERENCE BETWEEN CONDUITS PIPING AND STRUCTURAL WORK WILL BE AVOIDED.
5. THE CONTRACTOR SHALL HAVE VISITED THE JOB SITE BEFORE BIDDING AND ASCERTAINED ALL EXISTING CONDITIONS WHICH WILL AFFECT HIS WORK. FAILURE TO DO SO WILL NOT BE ACCEPTED AS A REASON FOR REQUESTING EXTRA PAY IN THE EVENT THAT THE EXISTING CONDITIONS RESULT IN EXTRA MATERIALS OR LABOR.
6. ANY EXISTING CONDITION FOUND BY THE CONTRACTOR WHICH WILL ADVERSELY AFFECT THE WORK SHALL IMMEDIATELY BE BROUGHT TO THE ATTENTION OF THE OWNER AND/OR THE ENGINEER.
7. AFTER THE SYSTEM IS INSTALLED CONTRACTOR SHALL CONDUCT AN OPERATIVE TEST FOR APPROVAL AND ACCEPTANCE BY THE OWNER. EQUIPMENT SHALL BE GUARANTEED FOR A PERIOD OF 1 YEAR FROM THE DATE OF FINAL ACCEPTANCE THEREOF AGAINST DEFECTIVE MATERIALS AND WORKMANSHIP.
8. ALL CONDUCTORS SHALL BE SOFT COPPER WITH THW/THWN 600 VOLT INSULATION CONDUIT SHALL BE RGS OR IMC FOR EXTERIOR RUNS, EMT FOR CONCEALED AND INTERIOR RUNS NOT EXPOSED TO WEATHER OR MECHANICAL DAMAGE MAY BE USED UNDERGROUND WHERE BURIED 18" AND PROVIDED WITH A GROUND WIRE AS PER NEC 250.
9. TYPE "NM" GROUNDED COPPER CABLE AS MANUFACTURE BY "ROMEX" OR APPROVED EQUAL MAY BE USED WHERE IN PARTITIONS AND INTERIOR SPACES.
10. GROUNDING SHALL COMPLY WITH NEC 250 AND SHALL CONSIST OF COPPER CONDUCTORS IN CONDUIT WITH BOLTED OR BRAZED CONNECTIONS TO COLD WATER PIPE RODS, AND ALL AVAILABLE ELECTRODES. (NEC: 250.50).
    ALL METALLIC RACEWAYS SHALL BE GROUNDED.
11. MECHANICAL EQUIPMENT DISCONNECT SWITCHES SHALL BE PROVIDED WITH DUAL ELEMENT FUSES SIZED AS NOTED PER MANUFACTURER'S RECOMMENDATION VERIFY BEFORE INSTALLATION.
12. MOTORS, TRANSFORMERS AND MECHANICAL EQUIPMENT SHALL BE PROVIDED WITH GREEN FIELD FLEXIBLE CONNECTIONS, WATERTIGHT WHERE EXPOSED TO MOISTURE AND WEATHER CONDITIONS.
13. IF NO RISER DIAGRAM IS SHOWN AS PART OF THESE PLANS; CONNECT TO EXISTING PANEL, RAISE CAPACITY OF PANEL & SERVICE IF REQUIRED.

F.E.M.A. NOTES:

1. ELECTRICAL OUTLETS (RECEPTACLES AND LIGHTING) BELOW BASE FLOOD ELEVATION SHALL BE INSTALLED AT HIGHEST PERMITTED ELEVATION AND SHALL BE INSTALLED ON (SEPARATE) INDEPENDENT CIRCUITS FROM THOSE IN THE HABITAT AREAS.
2. NO APPLIANCES OR APPLIANCES OUTLETS SHALL BE INSTALLED BELOW BASE FLOOD ELEVATION.
3. A/C COMPRESSORS SHALL BE INSTALLED ABOVE BASE FLOOD ELEVATION.
4. MAIN CIRCUIT BREAKER PANELS SHALL BE LOCATED ABOVE BASE FLOOD ELEVATION.
5. IT IS SUGGESTED THAT YOU CONFER WITH FLORIDA POWER & LIGHT TO LOCATE THE ELECTRIC METER TO COMPLY WITH FEDERAL EMERGENCY MANAGEMENT AGENCY REQUIREMENTS.

NOTE: PRIOR TO INSTALLATION OF ROUGH ELECTRICAL WIRING, CHECK NAME PLATE DATA OF EQUIPMENTS, TO OBTAIN CORRECT WIRE SIZES & OVER CURRENT PROTECTION

EXIST. 200 AMP PANEL ELECTRICAL SCHEDULE

200 A. 1PH. 3W. 120/240 — FLUSH MOUNT

EXIST. LOADS: 1-2 through 12-14. OTHER EXIST. AND NEW LOADS: 16-18B through 14B.

CCK	DESCRIPTION	TRIP	VOLTS	COND	WIRE	KW	REMARKS
1-2	EXIST. GEN. LGHTS/RECEPTS.	15	120	ROMEX	14	7.1	(2,374 SQ. FT.) (3W)
3,5	DRYER	2/25	240		10	5.0	
4,6	EXIST TANK LESS W.H.	2/60	240		6	16.0	
7	REFRIGIRATOR	20	120		12	1.0	
8	DISHWASHER	20	120		12	1.2	
9	GARBAGE DISPOSAL	20	120		12	1.5	
10	WASHING MACHINE	20	120		12	1.5	
11-13	SPARES						
12-14	SPARES	TOTAL AT 200 AMP PANEL				33.3	
16-18B	125 A. 1PH. 3W. EXIST. 125 A.MP 120/240 M.C.B. FOR SUB PANEL			CONDUIT SIZE	3#1		EXIST. INTERIOR MOUNTED
1B-8B	NEW LIGHTING & RECEPTS.	15	120	1/2"	14	--	SEE ABOVE
9B-11B	NEW A.H.U. #2	2/60	240		6	10.0	5.2 KW COOLING LOAD NOT COINCIDENT
10B,12B	NEW C.U. #2	2/40	240	3/4"	8		
13B,15B	EXT. LIGHTS & RECEPTS.	20	120	ROMEX	12	--	SEE ABOVE
14B	GFCI BATHROOM OUTLETS	20	120		12	--	SEE ABOVE
16B,18B	EXIST. SMALL APPLIANCES	20	120		12	3.0	
17B,19B	EXIST. RANGE	2/50	240		6	12.0	
20B,21B	SPARES	TOTAL AT 125 AMP PANEL				25.0	
					TOTAL=	58.3	

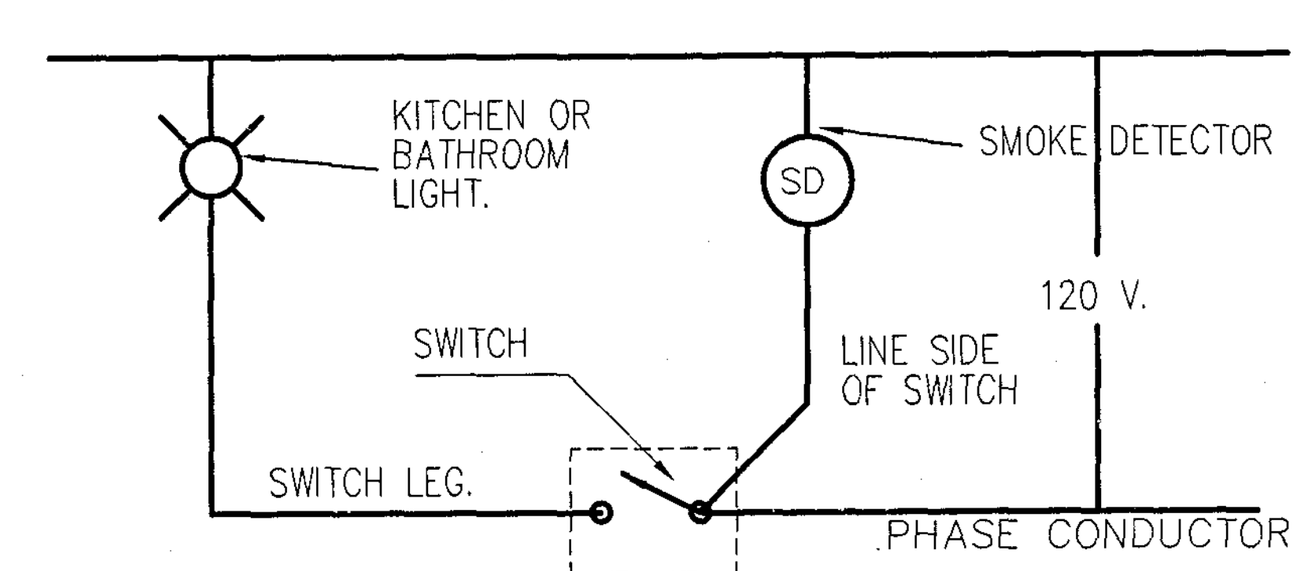

S/D NOTE:

SMOKE DETECTOR SHALL BE HARDWIRED (110 VOLT TYPE) TO A NON-SWITCHABLE KITCHEN OR BATHROOM LIGHTING CIRCUIT, WITH BATTERY BACK-UP AND SHALL NOT BE CONNECTED ONTO THE LOAD SIDE OF GROUND FAULT CIRCUIT INTERRUPTER. ALL SMOKE DETECTORS WITHIN EACH UNIT SHALL BE INTERCONNECTED.

(CSD) = CARBON MONOXIDE COMBO

CONNECTED LOAD

	58,300
-A/C	=10,000
	48,300

DEMAND CALCULATION

1st 10 KW @ 100%	10,000
REMAINDER @ 40%	9,320
A/C @ 100%	20,000
DEMAND LOAD	39,320 VA

39,320 / 240 = 163.83 AMPS

EXIST. 200 AMP MCB. & ELECTRICAL PANELS SUFFICES

ELECTRICAL LEGEND

Symbol	Description	Symbol	Description
⏀	APPLIANCE OUTLET	☐	RECESSED LIGHTING
⏀	DUPLEX OUTLET		VAPOR PROOF LIGHT
	50 AMP OUTLET		CEILING MOUNT FIXTURE
△	PHONE OUTLET BY OTHERS MAY VARY IN LOCATION		WALL MOUNT FIXTURE
GFI	GROUND FAULT INTERRUPTER	F	UL-RATED FAN BOX/J BOX
WP	WATER PROOF	SD	110 V./BATT.SMOKE DETECTOR
$	SINGLE POLE SWITCH		EXIT LIGHT
3W	3 WAY SWITCH		ELECTRICAL PANEL
	DISCONNECT SWITCH		METER
	EXHAUST OR MOTOR	TV	CABLE/TV BY OTHERS MAY VARY IN LOCATION

R=RELOCATED W/EXIST. CIRCUIT
N=NEW
E=EXIST. TO REMAIN

NOTE: ALL CIRCUITING SHOWN IS PRIMARY FOR LOAD PURPOSES ONLY. ACTUAL CIRCUITING LAYOUT AND LIGHTING FIXTURE LOCATION & TYPES MAY VARY AS PER ELECTRICAL CONTRACTOR
NOTE: SEPARATE ELECTRICAL SUB PERMIT IS REQ'D. UNDER THIS MASTER PERMIT.

NOTE: 90% OF LAMPS MUST HIGH EFFICIENCY AND AT LEAST 45 LUMENS/W. OR NOT LESS THAN 65 LUMUNS/W. AS PER F.B.C. RE 404

NOTE: arc fault circuit interrupter

1. The overcurrent protection of the new circuits shall be arc fault circuit interrupter combination type circuit breakers.

A) Dwelling Units. All 120-volt, single-phase, 15- and 20-ampere branch circuits supplying outlets or devices installed in dwelling unit kitchens, family rooms, dining rooms, living rooms, parlors, libraries, dens, bedrooms, sunrooms, recreation rooms, closets, hallways, laundry areas, or similar rooms or areas shall be protected by any of the means described in 210.12(A)(1) through (6): *NO A.F.C.I. FOR OUTDOORS*

2. All receptacles 15A and 20A, 125V shall be tamper resistant, according to NEC 406.11.

NOTE: ALL OUTDOOR INSTALLATIONS SHALL COMPLY WITH NEC 110.11, 110.12, 110.26, 110.28, & 358.12

NOTE CODES IN EFFECT:
FBC 2020, 7th EDITION
ELECTRICAL & NEC 2017

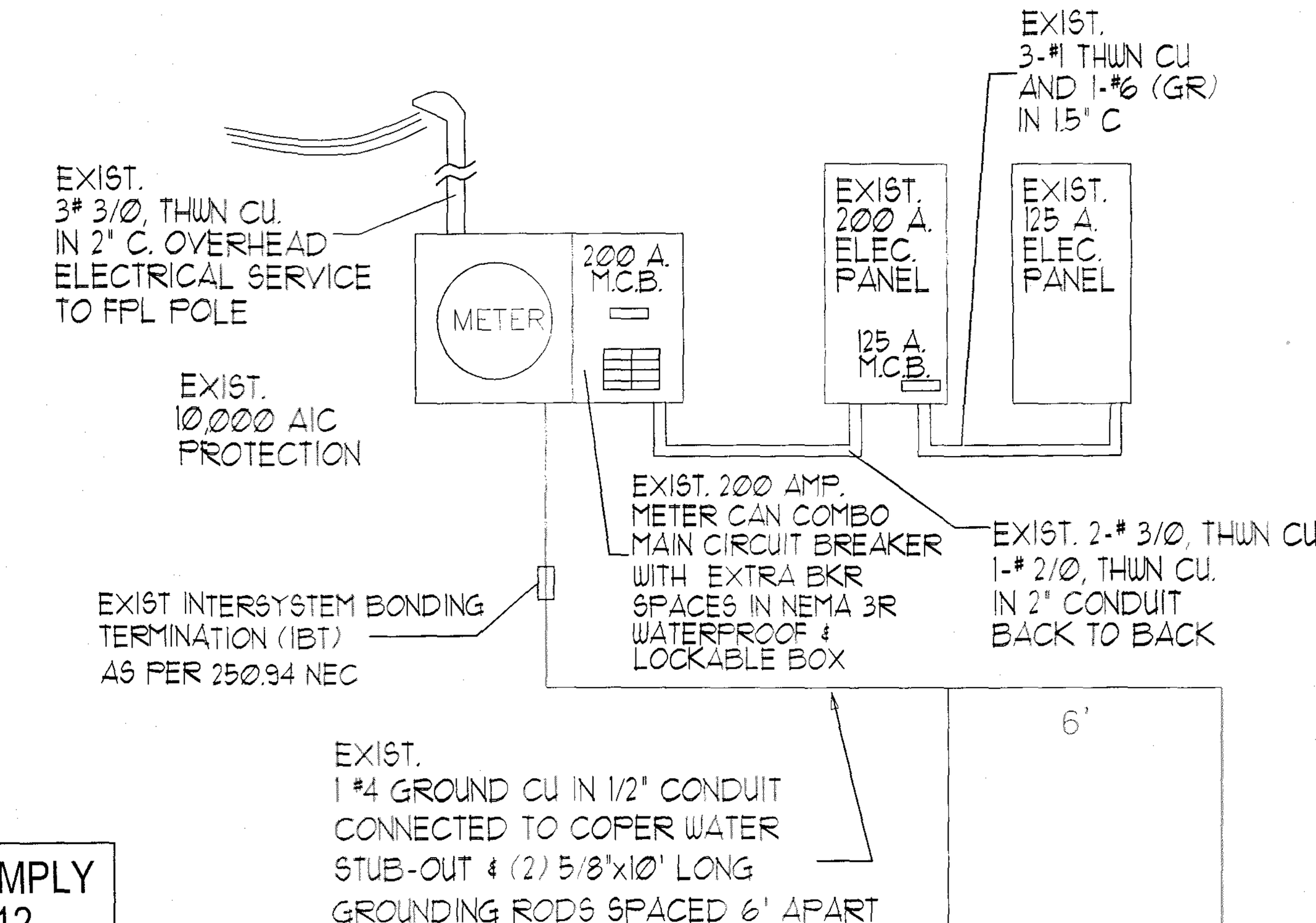

EXIST. RISER DIAGRAM

NOTE: ALL SWITCHED LOCATIONS TO HAVE NEUTRAL GROUNDED CIRCUIT CONDUCTORS AS PER 404.2(C) NEC

NOTE: ALL SWITCHES, OUTLETS & LIGHT FIXTURES SHOWN ARE OR MAY VARY IN ACTUAL FIELD CONDITIONS. THIS A DIAGRAM TO SHOW APPROXIMATE LOCATIONS FOR ALL NEW OR REPLACED ELECTRICAL FIXTURES, OUTLETS ETC.

ELECTRICAL SCOPE OF WORK:

REMOVE ANY EXIST. ELECTRICAL IN AREAS BEING DEMOLISHED.
REMOVE & REPLACE ALL ELECTRICAL WIRING IN ALL AREAS.
EXIST. 200 AMP. M.C.B., & 200 & 125 AMP ELECTRICAL PANELS TO REMAIN.
PROVIDE NEW GFCI OUTLETS AT NEW BATH ROOMS AS SHOWN.
PROVIDE ALL NEW LIGHTING,SWITCHES & OUTLETS AT ALL NEW AREAS AS SHOWN.
SEE FLOOR PLAN. PROVIDE NEW SMOKE DETECTORS AT AS SHOWN.
EXIST. UNDERGROUND ELECTRICAL SERVICE TO REMAIN.

NOTE: TRADE CONTRACTOR IS RESPONSIBLE FOR ANY COST EFFECTIVE REVISIONS TO PLANS IF ORIGINAL DESIGN OF APPROVED PLANS ARE NOT FOLLOWED. A DIFFERENT METHOD IN DESIGN MAY BE USED AFTER CONSTRUCTION & PERMIT DOCUMENTS ARE ACTIVE IN FIELD, BUT AGAIN TRADE CONTRACTOR WILL BE RESPONSIBLE FOR ANY INCURRED COSTS DUE TO ANY REQUIRED REVISION WORK ON THE ORIGINAL APPROVED PLANS. ANY AND ALL CHANGES TO PLANS MUST BE APPROVED BY THE ENGINEER OR ARCHITECT OF RECORD & BUILDING DEPT. AND WILL BE BILLED ACCORDINGLY.

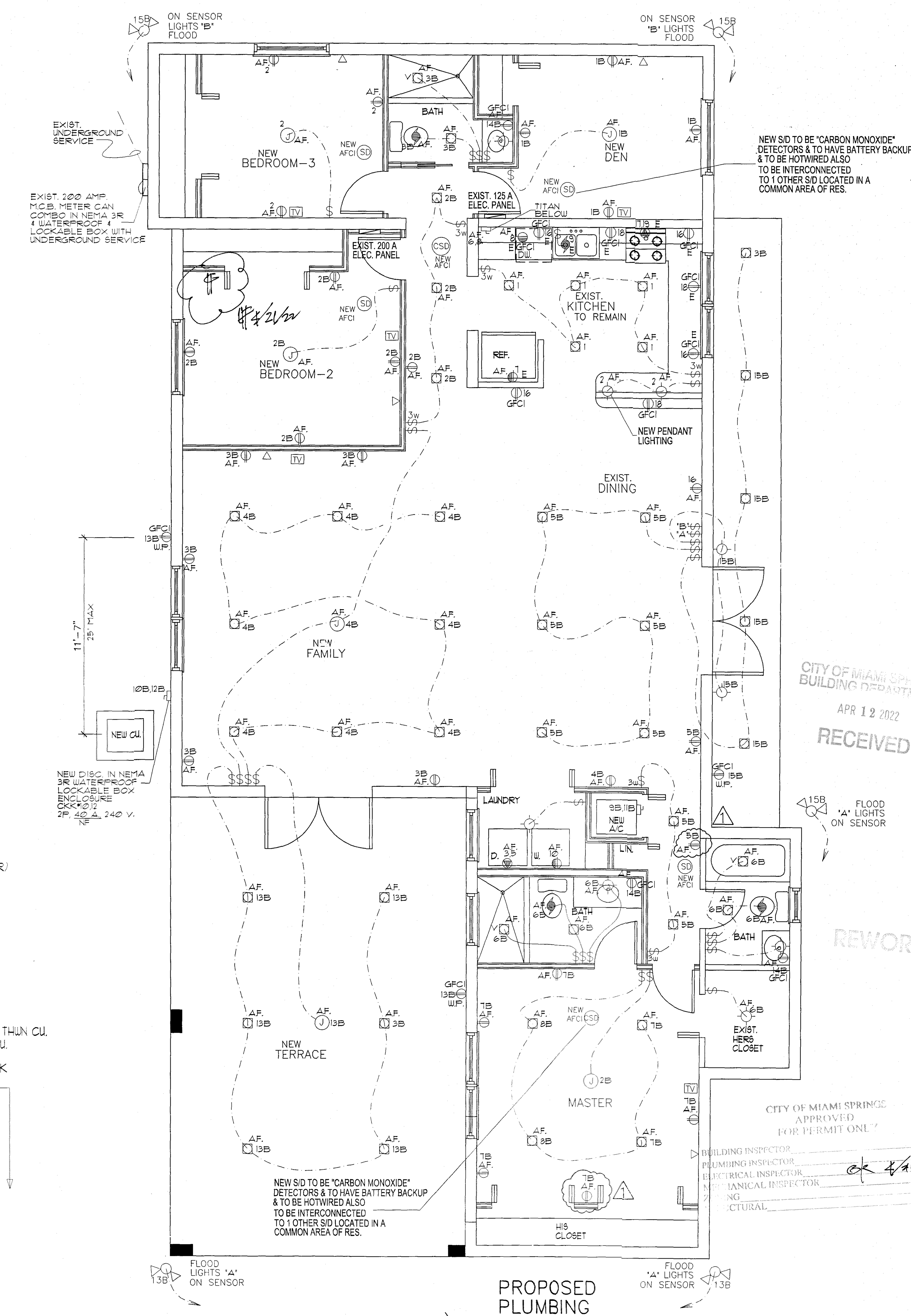

PROPOSED PLUMBING FLOOR PLAN
SCALE:1/4"=1'-0"

CITY OF MIAMI SPRINGS BUILDING DEPARTMENT
APR 12 2022
RECEIVED

REWORK

CITY OF MIAMI SPRINGS APPROVED FOR PERMIT ONLY
BUILDING INSPECTOR
PLUMBING INSPECTOR
ELECTRICAL INSPECTOR
MECHANICAL INSPECTOR
ZONING
STRUCTURAL

NO.	DATE
1	3-28-22 REVISED TO SHOW ADDITIONAL OUTLETS
2	*
3	*
4	*

DESG • DRWN • CHKD • APRV • DATE •

PROJECT NAME: ADDITION TO RESIDENCE FOR:
OWNER/PH: AMBAR PREVAL 786-587-7391
ADDRESS:200 N. ESPLANADE DRIVE MIAMI SPRINGS, FLORIDA 33166
PROJECT ADD: SAME

Guillermo Ramon Gonzalez
9000 SW. 168th Avenue Miami Florida 33196 Ph:305-484-8171
Registered Architect #13960 Ph:786-237-5154 (assistant)

STATE OF FLORIDA GUILLERMO RAMON GONZALEZ AR0013960 Seal REGISTERED ARCHITECT
Guillermo Ramon Gonzalez
R.A. 13960
STATE OF FLORIDA

101521

E-1

OTHER NOTES:

1. ALL CONSTRUCTION SHALL CONFORM TO THE FOLLOWING:
   A. THESE GENERAL NOTES AND DRAWINGS
   B. ALL APPLICABLE LOCAL AND STATE CODES, ORDINANCES AND REGULATIONS.
2. DIMENSIONS:
   A. ALL DIMENSIONS SHALL HAVE PREFERENCE OVER SCALE
   B. ALL DIMENSIONS ARE TO FACE OF STUD, OR FACE OF C.M.U. UNLESS OTHERWISE NOTED
   C. CEILING HEIGHT DIMENSIONS ARE FROM FINISH FLOOR SLAB, TO FINISH FACE OF CEILING JOIST.
3. WHEN SYMBOL IS ADJACENT TO A GIVEN DIMENSION, IT INDICATES THAT THE ACTUAL DIMENSION MIGHT VARY DUE TO EXISTING CONDITIONS.
4. VERIFY ALL DIMENSIONS AND ELEVATIONS PRIOR TO STARTING WORK AND INMEDIATELY NOTIFY THE ARCHITECT OF ANY DISCREPANCIES BETWEEN THE GIVEN DIMENSIONS AND THE ACTUAL DIMENSIONS FOR RESOLUTION BEFORE PROCEEDING WITH THE WORK.
5. WHERE NO CONSTRUCTION DETAILS ARE SHOWN OR NOTED FOR ANY PART OF WORK, SUCH DETAILS SHALL BE SIMILAR TO THOSE SHOWN FOR OTHER SIMILAR CONDITION AND SHALL BE USED SUBJECT TO REVIEW BY THE ARCHITECT (MEANING PAY ATTENTION TO WHAT YOU ARE DOING ON THE JOB SITE).
6. PROVIDE ACCESS PANELS TO ALL CONCEALED SPACES (I.E. ATTICTS, VOID SPACES, ETC.) AS REQUIRED BY THE BUILDING CODE AND LOCAL GOVERNING AUTHORITIES.
7. INSTALL ALL CABINETS, EQUIPMENT, AND FIXTURES UNDER THIS CONTRACT IN ACCORDANCE WITH THE APPLICABLE PORTIONS OF THE CONSTRUCTION DOCUMENTS.
8. ALL OPENINGS AT JOINTS ON WINDOWS, WALL SOLE PLATES, OPENINGS FOR UTILTY PIPING AND WIRING ETC. SHALL BE CAULKED AND SEALED.
9. ELECTRICAL AND COMMUNICATIONS SYSTEM RECEPTACLES ON WALLS SHALL BE MOUNTED NO LESS THAN 12 INCHES ABOVE THE FLOOR. THESE REQUIREMENTS DO NOT APPLY WHERE THE USE OF SPECIAL EQUIPMENT DICTATES OTHERWISE OR WHERE ELECTRICAL AND COMMUNICATIONS SYSTEMS RECEPTACLES ARE NOT NORMALLY INTENTED FOR USE BY BUILDING OCCUPANTS.
10. NEITHER THE OWNER OR THE ARCHITECT SHALL ENFORCE SAFETY MEASURES OR REGULATIONS. CONTRACTOR SHALL DESIGN, CONSTRUCT AND MAINTAIN ALL SAFETY DEVICES INCLUDING SHORING AND BRACING AND SHALL BE SOLELY RESPONSIBLE FOR CONFORMING TO ALL LOCAL, STATE AND FEDERAL SAFETY AND HEALTH REGULATIONS, STANDARDS AND LAWS.
11. The Architect or Engineer ASSUMES NO RESPONSIBILITY RELATING TO ANY HAZARDOUS OR TOXIC MATERIALS, INCLUDING ASBESTOS, AND ASSUMES NO RESPONSABILITY RELATING TO ITS EXISTENCE OR REMOVAL. THE OWNER SHALL TAKE ACTION FOR DIRECTLY CONTRACTING WITH A CONSULTANT OR SPECIALIST FOR SUCH, LICENSED BY THE STATE OF FLORIDA, SHOULD THOSE SERVICES BE REQUIRED ON THE PROJECT.
12. THESE PLANS ARE NOT TO BE REPRODUCED, CHANGED OR COPIED IN ANY FORM OR MANNER WHATSOEVER, NOR ARE THEY TO BE ASSIGNED TO A THIRD PARTY WITHOUT FIRST OBTAINING THE WRITTEN PERMISSION AND CONSENT OF THE ARCHITECT. IN THE EVENT OF UNAUTHORIZED USE OF THESE PLANS BY A THIRD PARTY, THE THIRD PARTY SHALL HOLD THE ARCHITECT HARMLESS AND PAY ALL ATTORNEY FEES AND COURT COSTS IN THE EVENT OF LITIGATION.
13. COORDINATE AND VERIFY WITH THE PLUMBING, MECHANICAL, AND ELECTRICAL TRADES, THE SIZES AND LOCATION OF ALL PIPING, DUSCTWORK, TRENCHES, SLEEVES, SPECIAL BOLTINGFOR EQUIPMENT CONDUITS, ETC. THROUGH AND UNDER FLOOR SLABS.
14. THE USE OF THE WORD "PROVIDE" IN CONNECTION WITH ANY ITEM SPECIFIED, IS INTENTED TO MEAN THAT SUCH SHALL BE FURNISHED, INSTALLED AND CONNECTED. WHERE SO REQUIRED, EXCEPT AS NOTED OTHERWISE.
15. SUBMIT ALL PERTINENT SHOP DRAWINGS TO THE ARCHITECT FOR REVIEW PRIOR TO FABRICATION AND INSTALLATION, ALLOWING SUFFICIENT TIME FOR REVIEW AND CORRECTIVE ACTION SHOULD IT BE REQUIRED. SUBMIT CATALOG CUTS OF ALL FIXTURES AND EQUIPMENT, AND SAMPLES OF ALL FINISHES SPECIFIED FOR APPROVAL PRIOR TO FABRICATION AND INSTALLATION. SUBMIT IN TRIPLICATE.
16. PRIOR TO SUBMITTAL OF BID, NOTIFY THE ARCHITECT IN WRITING OF SPECIFIED MATERIALS OR EQUIPMENT WHICH ARE EITHER UNAVAILABLE OR WILL CAUSE A DELAY IN THE CONSTRUCTION COMPLETION SCHEDULE INCLUDE SUFFICIENT INFORMATION FOR EVALUATION OF ANY PROPOSED ALTERNATES.
17. SUPPLY TEMPORARY ELECTRICAL POWER IF REQUIRED TO THE JOB SITE FOR USE BY ALL CONSTRUCTION TRADES PRIOR TO THE HOOK-UP OF SPECIFIED ELECTRICAL WORK. INCLUDE SUFFICIENT INFORMATION FOR EVALUATION OF ANY PROPOSED ALTERNATES. ALSO ANY UPGRADES ON ANY ITEMS OR MATERIALS SHOWN OR NOT SHOWN ON THESE PLANS ARE STRICTLY BETWEEN THE CONTRACTOR & THE OWNER.
18. PROVIDE AND MAINTAIN TEMPORARY BARRICADES, FENCES, ENCLOSURE WALLS, ETC. AS REQUIRED TO PROTECT THE PUBLIC DURING THE PERIOD OF CONSTRUCTION.
19. PREPARE ALL FLOORS TO RECEIVE FINISHES INDICATED. ANY SURFACE DEFECTS AND IRREGULARITIES SHALL BE FILLED AND LEVELED. FLOOR SURFACES ARE TO BE LEVEL, CLEAN AND SMOOTH, MEETING THE MANUFACTURER'S SPECIFICATIONS, PRIOR TO INSTALLATION OF ANY FLOOR COVERING.
20. MAINTAIN THE JOB SITE IN A CLEAN, ORDERLY CONDITION FREE OF DEBRIS AND LITTER. REMOVE ALL TRASH AND DEBRIS AS A RESULT OF THE OPERATION ON A REGULAR BASIS DURING AND INMEDIATELY UPON COMPLETION OF EACH PHASE OF WORK.
21. ALL MATERIALS STORED ON THE SITE SHALL BE PROPERLY STACKED AND PROTECTED TO PREVENT DAMAGE AND DETERIORATION UNTILL USED. FAILURE TO PROTECT MATERIALS MAY BE CAUSE FOR REJECTION OF WORK.
22. PROVIDE ALL NECESSARY BLOCKING, BACKING AND FRAMING FOR LIGHT FIXTURES, ELECTRICAL UNITS, H.V.A.C. EQUIPMENT AND ALL OTHER ITEMS REQUIRING SAME.
23. ALL PIPING AND CONDUIT SHALL BE IN WALLS OR FURRED SPACES, UNLESS NOTED OTHERWISE.
24. MECHANICAL UNITS SHALL BE ANCHORED PER HURRICANE CODE.
25. OUTLETS AND TELEPHONES BACK IN A WALL SHALL BE SEPARATED BY A MINIMUM OF ONE STUD SPACE.
26. CONTRACTOR IS TO MAKE EXACT DETERMINATION AS TO THE LOCATION OF ALL EXISTING UTILITIES. DO NOT BEGIN WORK UNTIL THIS HAS BEEN DONE. CONTRACTOR IS FULLY RESPONSIBLE FOR DAMAGE CAUSED BY FAILURY TO LOCATE AND PRESERVE UTILITIES.
27. BEFORE STARTING A SECTION OF WORK, THE CONTRACTOR AND/OR HIS SUBCONTRACTOR SHALL CAREFULLY EXAMINE ALL PREPARATORY WORK THAT HAS BEEN EXECUTED TO RECEIVE HIS WORK. HE SHALL CHECK CAREFULLY, BY WHATEVER MEANS ARE REQUIRED, TO INSURE THAT HIS WORK AND ADJACENT RELATED WORK WILL FINISH TO PROPER CONTOURS, PLANS, AND LEVELS. HE SHALL PROMPTLY NOTIFY THE GENERAL CONTRACTOR OF ANY DEFECTS OR IMPERFECTIONS IN PREPARATORY WORKS WHICH WILL IN ANY WAY AFFECT SATISFACTORY COMPLETION ON HIS WORK. ABSENCE OF SUCH NOTIFICATION WILL BE CONSTRUED AS AN ACCEPTANCE OF PREPARATORY WORK, AND LATER CLAIMS OF DEFECTS THEREIN WILL NOT BE RECOGNIZED.
28. UNDER NO CONDITION SHALL WORK PROCEED PRIOR TO PREPARATORY WORK HAVING BEEN COMAPACTED, CURED, DRIED, AND/OR OTHERWISE MADE SATISFACTORY TO RECEIVE SUCH RELATED WORK. RESPONSABILITY FOR TIMELY INSTALLATION OF ALL MATERIALS RESTS SOLELY WITH THE GENERAL CONTRACTOR WHO WILL MAINTAIN COORDINATION AT ALL TIMES.
29. DO NOT CUT-AND-PATCH STRUCTURAL WORK IN A MANNER RESULTING IN A REDUCTION OF LOAD CARRYING CAPACITY OR LOAD/DEFLECTION RATIO. DO NOT CUT-AND-PATCH OPERATIONAL ELEMENTS AND SAFETY-RELATED COMPONENTS IN A MANNER RESULTING IN A REDUCTION OF CAPACITIES TO PERFORM IN THE MANNER INTENDED OR RESULTING IN DECREASED OPERATIONAL LIFE, INCREASES MAINTENANCE, OR DECREASED SAFETY. DO NOT CUT-AND-PATCH WORK WICH IS EXPOSED ON THE EXTERIOR OR EXPOSED IN OCCUPIED SPACES OF THE BUILDING, IN A MANNER RESULTING IN A REDUCTION OF VISUAL QUALITIES, OR RESULTING IN SUBSTANCIAL EVIDENCE OF THE CUT-AND-PATCH WORK, AS JUDGED SOLELY BY THE STRUCTURAL ENGINEER. REMOVE AND REPLACE WORK JUDGED BY THE ARCHITECT TO BE UNSATISFACTORY.
30. ALL OPENING THROUGH FIRE-RATED WALLS SHALL BE PROTECTED WITH RATED ASSEMBLIES IN ACCORDANCE WITH THE REQUIRENTS OF STANDARDS BUILDING CODE AND N.F.P.A.
31. THE GENERAL CONTRACTOR SHALL BE RESPONSIBLE FOR ALL CONSTRUCTION SCHEDULING, AND SHALL BE RESPONSIBLE TO SEE THAT THE WORK IS DONE IN A TIMELY MANNER & ACCORDING TO PLANS .A PROGRESS SCHEDULE SHALL BE PREPARED AND SUBMITTED AS REQUIRED BY THE OWNER. THE ARCHITECT OR ENGINEER IS NOT RESPONSIBLE FOR ANY UNFORESEEN HIDDEN CONDITIONS DURING CONSTRUCTION. THESE WILL BE ADDRESSED AND BILLED SEPARATELY ACCORDING TO TYPE OF EXISTING CONDITION ON SITE.
32. THE GENERAL CONTRACTOR SHALL NOT ALLOW OR DIRECT MATERIALS OF ANY TRADE TO BE INSTALLED PREMATURELY, WHEN IT IS OBVIOUS THAT SUCH MATERIALS MAY BE DAMAGED BY SUBSEQUENT WORK OF OTHER TRADES. THE GENERAL CONTRACTOR SHALL TAKE SUCH STEPS AS ARE NECESSARY TO PROTECT SUCH COMPLETED WORK, EXCEPT WHEN SUCH WORK IS EXPRESSLY SPECIFIED TO BE PROTECTED BY THE SUB-CONTRACTOR INSTALLING THE WORK.
33. MISUNDERSTANDIGS OR MISCUMUNICATIONS BETWEEN THE GENERAL CONTRACTOR AND ALL SUBCONTRACTORS SHALL NOT BE THE RESPONSABILITY OF THE ARCHITECT AND OR ENGINEER, AND FURTHER THE ARCHITECT AND OR ENGINEER SHALL NOT SERVE AS REFEREE OR MIDDLE PERSON BETWEEN ANY MISUNDERSTANDIGS OR MISCUMUNICATIONS BETWEEN THE OWNER,GENERAL CONTRACTOR AND ALL SUBCONTRACTORS.

INTRUSION NOTES:

1. ALL LOCKS ON EXTERIOR DOORS SHALL BE CAPABLE OF RESISTING A FORCE OF 300 LBS. APPLIED IN ANY MOVABLE DIRECTION.
2. ALL SINGLE EXTERIOR SWING DOORS SHALL HAVE A LOCK TO BE KEY OPERATED FROM EXTERIOR WITH A MINIMUM OF 6000 POSSIBLE KEY CHANGES OR LOCKING COMBINATIONS IF KEY LOCK IS USED, THERE SHALL BE AN AUXILIARY SINGLE DEAD BOLT WITH HARDENED BOLT OR INSERTS.
3. THE ACTIVE LEAF OF PAIR OF EXTERIOR SWING DOORS SHALL HAVE SAME LOCKS AS REQUIRED FOR SINGLE EXTERIOR SWING DOORS. THE INACTIVE LEAF OF THESE PAIR OF DOORS SHALL HAVE MULTIPLE POINT LOCKS WITH 5/8" MINIMUM THROW BOLTS WITH INSERTS.
4. SLIDING GLASS DOORS SHALL BE PROVIDED WITH SLIDING DOOR DEAD BOLT OR A PIN NOT REMOVABLE OR OPERABLE FROM THE EXTERIOR AT THE JAMB, SILL, HEAD OR MEETING MULLIONS. THESE DOORS SHALL BE REINFORCED IN THE STRIKE AND LOCK AREA TO MAINTAIN BOLT STRENGTH EFFECTIVENESS IF NECESSARY AND SUCH DOORS SHALL HAVE NO SCREWS REMOVABLE FROM OUTSIDE WHICH WOULD FACILITATE READY ENTRY FROM OUTSIDE.
5. OVERHEAD DOORS SHALL BE PROVIDED WITH MULTIPLE POINT LOCKS OR BE LOCKED AT MORE THAN ONE POINT WITH HARDENED BOLTS OR BOLTS WITH INSERTS ENGAGING AT LEAST TWO OPPOSITE POINTS A MINIMUM OF 5/8". OTHER LOCKING DEVICES SHALL NOT BE REQUIRED WHERE SUCH DOORS ARE CONTROLLED AND LOCKED BY ELECTRIC POWER.
6. HINGES ON EXTERIOR OUT SWINGING DOORS SHALL HAVE NON-EXPOSED SCREWS AND NON PINS.
7. JAMBS OF ALL EXTERIOR OFFSET TYPE IN-SWINGING DOORS SHALL BE RABBET OR OF SIMILAR FABRICATION TO PREVENT DEFEATING THE PURPOSE OF THE STRIKE AND THE INTEGRITY OF LOCKS AND LATCHES.
8. SINGLE SWINGING EXTERIOR DOORS, IF WOOD, SHALL BE SOLID CORE OF NOT LESS THAN 1 3/8" THICK.
9. GLASS IN EXTERIOR DOORS SHALL COMPLY WITH THE AMERICAN NATIONAL STANDARDS INSTITUTES Z97.1.
10. VISION PANELS IN EXTERIOR DOORS, OTHER THAN GLAZING WITHIN 40" OF THE INSIDE LOCKING ACTIVATING DEVICE OF LOCKS AND SWINGING GLASS DOORS SHALL COMPLY WITH AMERICAN NATIONAL STANDARDS INSTITUTE, STANDARD Z97.1.
11. SLIDING GLASS DOORS AND WINDOWS SHALL NOT BE INSTALLED CLOSER THAN 40" TO THE INSIDE LOCK ACTIVATING DEVICE.
12. VENTS IN OVERHEAD GARAGE TYPE DOORS SHALL NOT BE INSTALLED CLOSER THAN 40" TO THE INSIDE LOCK ACTIVATING DEVICE.
13. SINGLE SWING EXTERIOR AND SWING DOORS CONNECTING LIVING AREAS WITH GARAGE AREAS SHALL BE SECURED WITH A LATCH AND A SINGLE DEAD BOLT WITH ONE INCH MINIMUM THROWS OR A COMBINATION OF DEAD LATCH AND DEAD BOLT SETS WITH LATCH THROW A MINIMUM OF 1/2" AND BOLTS HAVING A 1" MINIMUM THROW. DOORS SHALL BE A MINIMUM OF 1 3/8" THICK SOLID CORE.
14. FRONT MAIN ENTRANCE DOORS SHALL BE PROVIDED WITH A SCOPE OR VISION PANELS.

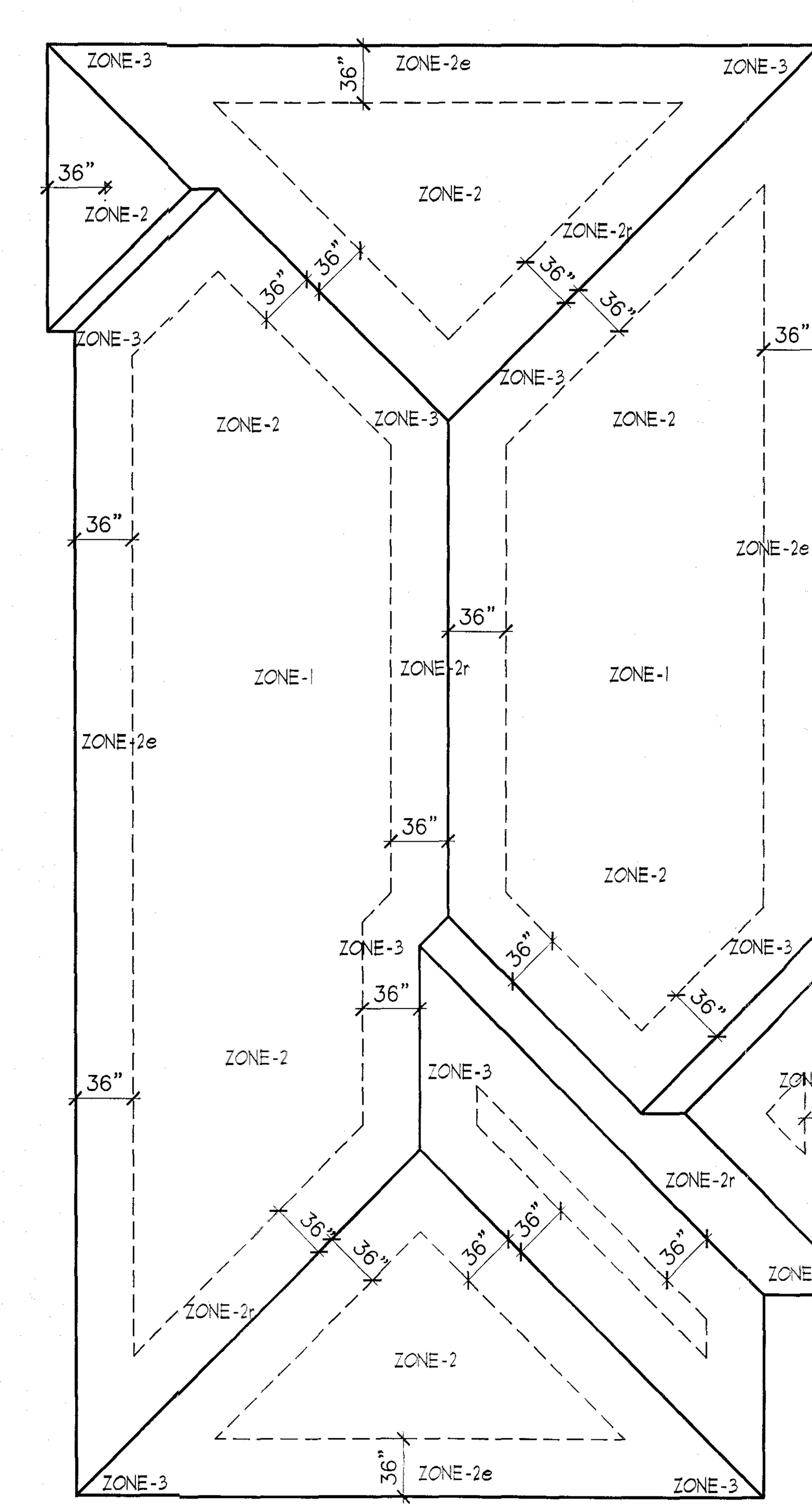

ROOF ZONE/DIAPHRAM REFERENCE PLAN
SCALE:1/8"=1'-0"
AS PER ASCE 7-16

ROOF GROSS PRESSURE (ASD DESIGN)			
ZONE-1=	+16.29	-40.05	
ZONE-2e	+16.29	-43.45	
ZONE-2r	+16.29	-50.23	
ZONE-3	+16.29	-43.45	

NOTE: ALL NEW ROOFING SYSTEM-MATERIALS TO HAVE A VALID N.O.A., PRODUCT APPROVALS & TO BE SUBMITTED FOR REVIEW AT TIME OF ROOFING PERMIT APPLICATION UNDER SEPARATE SUB PERMIT.

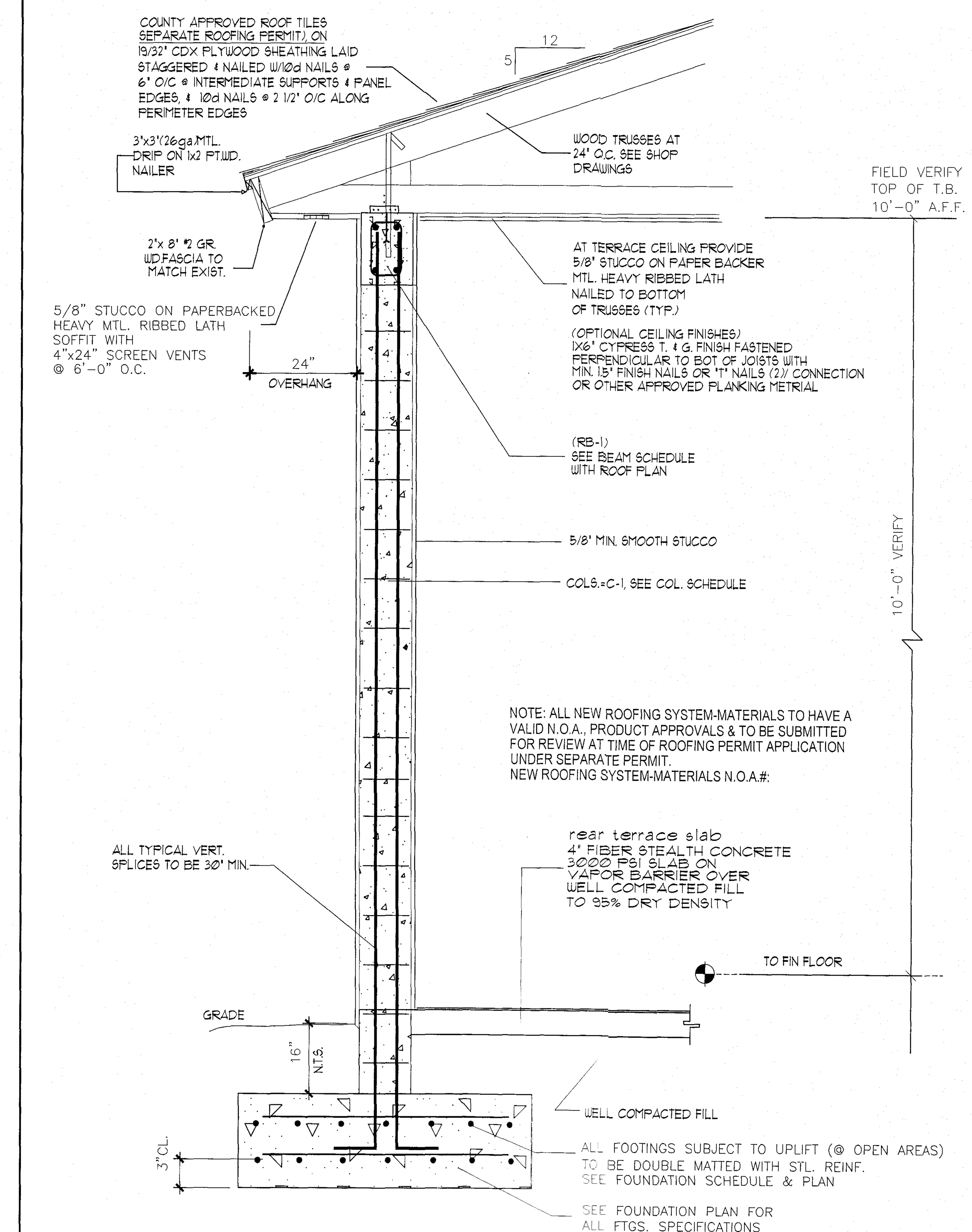

(B) SECTION AT NEW PORCH COLUMN
SCALE : 3/4" = 1'-0"

REWORK

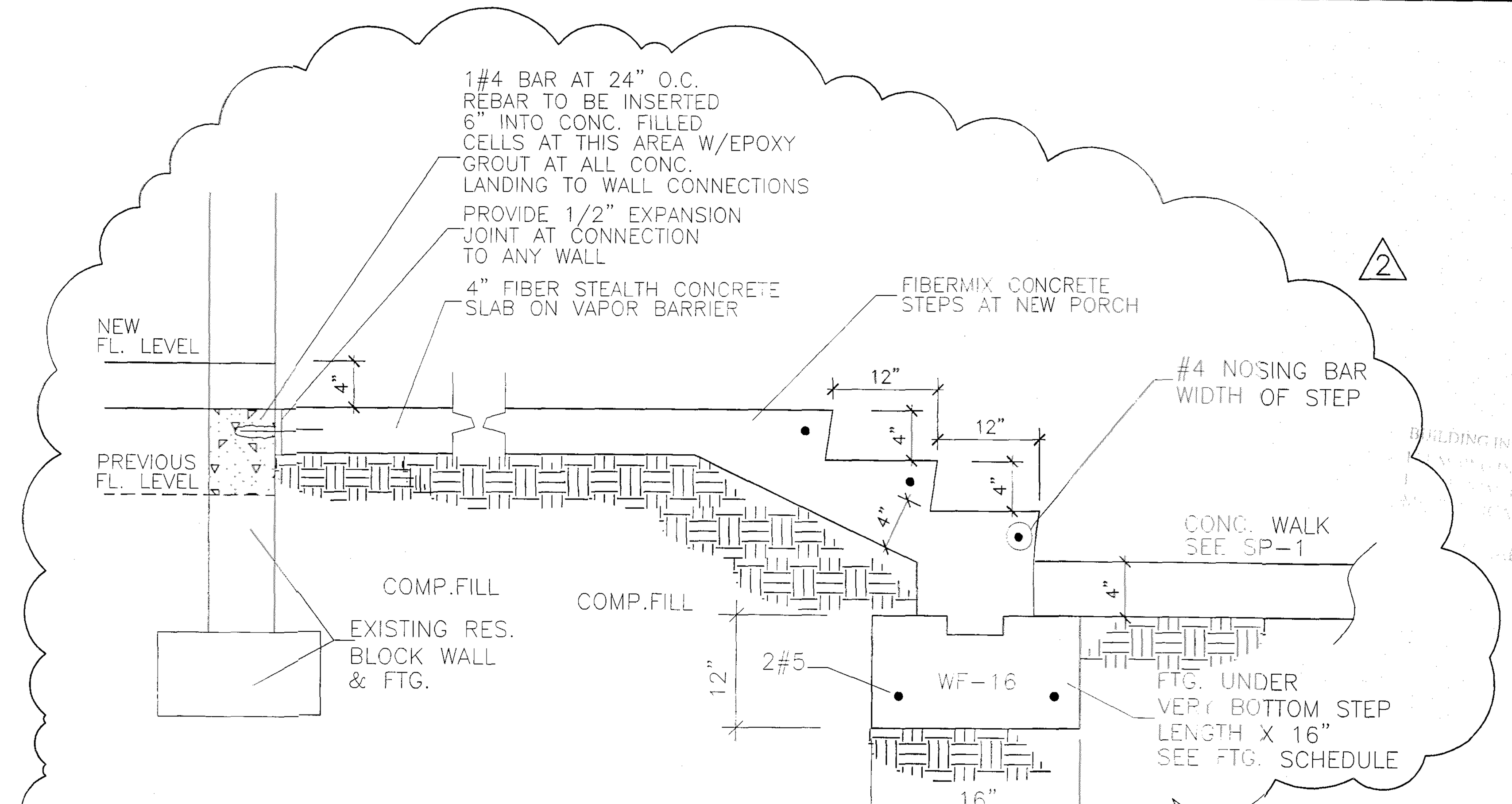

(C) TYP. CONCRETE STEPS ON GRADE
3/4"=1'

CITY OF MIAMI SPRINGS BUILDING DEPARTMENT
APR 12 2022
RECEIVED

CITY OF MIAMI SPRINGS APPROVED FOR PERMIT ONLY

NO.	DATE	
1	3-23-22	REVISED TO COMPLY WITH CITY COMMENTS
2	*	
3	*	
4	*	

DESG • DRWN • CHKD • APRV • DATE •

PROJECT NAME: ADDITION TO RESIDENCE FOR:
OWNER/PH: AMBAR PREVAL 786-587-7391
ADDRESS:200 N. ESPLANADE DRIVE MIAMI SPRINGS, FLORIDA 33166
PROJECT ADD: SAME

Guillermo Ramon Gonzalez
9000 SW. 168th Avenue Miami Florida 33196 Ph:305-484-8171
Registered Architect #13960 Ph:786-237-5154 (assistant)

STATE OF FLORIDA GUILLERMO RAMON GONZALEZ REGISTERED ARCHITECT AR0013960 Seal
Guillermo Ramon Gonzalez
R.A. 13960
STATE OF FLORIDA

101521

A-6

OTHER NOTES:

1. ALL CONSTRUCTION SHALL CONFORM TO THE FOLLOWING:
   A. THESE GENERAL NOTES AND DRAWINGS
   B. ALL APPLICABLE LOCAL AND STATE CODES, ORDINANCES AND REGULATIONS.
2. DIMENSIONS:
   A. ALL DIMENSIONS SHALL HAVE PREFERENCE OVER SCALE
   B. ALL DIMENSIONS ARE TO FACE OF STUD, OR FACE OF C.M.U. UNLESS OTHERWISE NOTED
   C. CEILING HEIGHT DIMENSIONS ARE FROM FINISH FLOOR SLAB, TO FINISH FACE OF CEILING JOIST.
3. WHEN SYMBOL IS ADJACENT TO A GIVEN DIMENSION, IT INDICATES THAT THE ACTUAL DIMENSION MIGHT VARY DUE TO EXISTING CONDITIONS.
4. VERIFY ALL DIMENSIONS AND ELEVATIONS PRIOR TO STARTING WORK AND IMMEDIATELY NOTIFY THE ARCHITECT OF ANY DISCREPANCIES BETWEEN THE GIVEN DIMENSIONS AND THE ACTUAL DIMENSIONS FOR RESOLUTION BEFORE PROCEEDING WITH THE WORK.
5. WHERE NO CONSTRUCTION DETAILS ARE SHOWN OR NOTED FOR ANY PART OF WORK, SUCH DETAILS SHALL BE SIMILAR TO THOSE SHOWN FOR OTHER SIMILAR CONDITION AND SHALL BE USED SUBJECT TO REVIEW BY THE ARCHITECT (MEANING PAY ATTENTION TO WHAT YOU ARE DOING ON THE JOB SITE).
6. PROVIDE ACCESS PANELS TO ALL CONCEALED SPACES (I.E. ATTICTS, VOID SPACES, ETC.) AS REQUIRED BY THE BUILDING CODE AND LOCAL GOVERNING AUTHORITIES.
7. INSTALL ALL CABINETS, EQUIPMENT, AND FIXTURES UNDER THIS CONTRACT IN ACCORDANCE WITH THE APPLICABLE PORTIONS OF THE CONSTRUCTION DOCUMENTS.
8. ALL OPENINGS AT JOINTS ON WINDOWS, WALL SOLE PLATES, OPENINGS FOR UTILTY PIPING AND WIRING ETC. SHALL BE CAULKED AND SEALED.
9. ELECTRICAL AND COMMUNICATIONS SYSTEM RECEPTACLES ON WALLS SHALL BE MOUNTED NO LESS THAN 12 INCHES ABOVE THE FLOOR. THESE REQUIREMENTS DO NOT APPLY WHERE THE USE OF SPECIAL EQUIPMENT DICTATES OTHERWISE OR WHERE ELECTRICAL AND COMMUNICATIONS SYSTEMS RECEPTACLES ARE NOT NORMALLY INTENTED FOR USE BY BUILDING OCCUPANTS.
10. NEITHER THE OWNER OR THE ARCHITECT SHALL ENFORCE SAFETY MEASURES OR REGULATIONS. CONTRACTOR SHALL DESIGN, CONSTRUCT AND MAINTAIN ALL SAFETY DEVICES INCLUDING SHORING AND BRACING AND SHALL BE SOLELY RESPONSIBLE FOR CONFORMING TO ALL LOCAL, STATE AND FEDERAL SAFETY AND HEALTH REGULATIONS, STANDARDS AND LAWS.
11. The Architect or Engineer ASSUMES NO RESPONSIBILITY RELATING TO ANY HAZARDOUS OR TOXIC MATERIALS, INCLUDING ASBESTOS, AND ASSUMES NO RESPONSABILITY RELATING TO ITS EXISTENCE OR REMOVAL. THE OWNER SHALL TAKE ACTION FOR DIRECTLY CONTRACTING WITH A CONSULTANT OR SPECIALIST FOR SUCH, LICENSED BY THE STATE OF FLORIDA, SHOULD THOSE SERVICES BE REQUIRED ON THE PROJECT.
12. THESE PLANS ARE NOT TO BE REPRODUCED, CHANGED OR COPIED IN ANY FORM OR MANNER WHATSOEVER, NOR ARE THEY TO BE ASSIGNED TO A THIRD PARTY WITHOUT FIRST OBTAINING THE WRITTEN PERMISSION AND CONSENT OF THE ARCHITECT. IN THE EVENT OF UNAUTHORIZED USE OF THESE PLANS BY A THIRD PARTY, THE THIRD PARTY SHALL HOLD THE ARCHITECT HARMLESS AND PAY ALL ATTORNEY FEES AND COURT COSTS IN THE EVENT OF LITIGATION.
13. COORDINATE AND VERIFY WITH THE PLUMBING, MECHANICAL, AND ELECTRICAL TRADES, THE SIZES AND LOCATION OF ALL PIPING, DUSCTWORK, TRENCHES, SLEEVES, SPECIAL BOLTINGFOR EQUIPMENT CONDUITS, ETC. THROUGH AND UNDER FLOOR SLABS.
14. THE USE OF THE WORD "PROVIDE" IN CONNECTION WITH ANY ITEM SPECIFIED, IS INTENTED TO MEAN THAT SUCH SHALL BE FURNISHED, INSTALLED AND CONNECTED. WHERE SO REQUIRED, EXCEPT AS NOTED OTHERWISE.
15. SUBMIT ALL PERTINENT SHOP DRAWINGS TO THE ARCHITECT FOR REVIEW PRIOR TO FABRICATION AND INSTALLATION, ALLOWING SUFFICIENT TIME FOR REVIEW AND CORRECTIVE ACTION SHOULD IT BE REQUIRED. SUBMIT CATALOG CUTS OF ALL FIXTURES AND EQUIPMENT, AND SAMPLES OF ALL FINISHES SPECIFIED FOR APPROVAL PRIOR TO FABRICATION AND INSTALLATION. SUBMIT IN TRIPLICATE.
16. PRIOR TO SUBMITTAL OF BID, NOTIFY THE ARCHITECT IN WRITING OF SPECIFIED MATERIALS OR EQUIPMENT WHICH ARE EITHER UNAVAILABLE OR WILL CAUSE A DELAY IN THE CONSTRUCTION COMPLETION SCHEDULE INCLUDE SUFFICIENT INFORMATION FOR EVALUATION OF ANY PROPOSED ALTERNATES.
17. SUPPLY TEMPORARY ELECTRICAL POWER IF REQUIRED TO THE JOB SITE FOR USE BY ALL CONSTRUCTION TRADES PRIOR TO THE HOOK-UP OF SPECIFIED ELECTRICAL WORK. INCLUDE SUFFICIENT INFORMATION FOR EVALUATION OF ANY PROPOSED ALTERNATES. ALSO ANY UPGRADES ON ANY ITEMS OR MATERIALS SHOWN OR NOT SHOWN ON THESE PLANS ARE STRICTLY BETWEEN THE CONTRACTOR & THE OWNER.
18. PROVIDE AND MAINTAIN TEMPORARY BARRICADES, FENCES, ENCLOSURE WALLS, ETC. AS REQUIRED TO PROTECT THE PUBLIC DURING THE PERIOD OF CONSTRUCTION.
19. PREPARE ALL FLOORS TO RECEIVE FINISHES INDICATED. ANY SURFACE DEFECTS AND IRREGULARITIES SHALL BE FILLED AND LEVELED. FLOOR SURFACES ARE TO BE LEVEL, CLEAN AND SMOOTH, MEETING THE MANUFACTURER'S SPECIFICATIONS, PRIOR TO INSTALLATION OF ANY FLOOR COVERING.
20. MAINTAIN THE JOB SITE IN A CLEAN, ORDERLY CONDITION FREE OF DEBRIS AND LITTER. REMOVE ALL TRASH AND DEBRIS AS A RESULT OF THE OPERATION ON A REGULAR BASIS DURING AND INMEDIATELY UPON COMPLETION OF EACH PHASE OF WORK.
21. ALL MATERIALS STORED ON THE SITE SHALL BE PROPERLY STACKED AND PROTECTED TO PREVENT DAMAGE AND DETERIORATION UNTILL USED. FAILURE TO PROTECT MATERIALS MAY BE CAUSE FOR REJECTION OF WORK.
22. PROVIDE ALL NECESSARY BLOCKING, BACKING AND FRAMING FOR LIGHT FIXTURES, ELECTRICAL UNITS, H.V.A.C. EQUIPMENT AND ALL OTHER ITEMS REQUIRING SAME.
23. ALL PIPING AND CONDUIT SHALL BE IN WALLS OR FURRED SPACES, UNLESS NOTED OTHERWISE.
24. MECHANICAL UNITS SHALL BE ANCHORED PER HURRICANE CODE.
25. OUTLETS AND TELEPHONES BACK IN A WALL SHALL BE SEPARATED BY A MINIMUM OF ONE STUD SPACE.
26. CONTRACTOR IS TO MAKE EXACT DETERMINATION AS TO THE LOCATION OF ALL EXISTING UTILITIES. DO NOT BEGIN WORK UNTIL THIS HAS BEEN DONE. CONTRACTOR IS FULLY RESPONSIBLE FOR DAMAGE CAUSED BY FAILURY TO LOCATE AND PRESERVE UTILITIES.
27. BEFORE STARTING A SECTION OF WORK, THE CONTRACTOR AND/OR HIS SUBCONTRACTOR SHALL CAREFULLY EXAMINE ALL PREPARATORY WORK THAT HAS BEEN EXECUTED TO RECEIVE HIS WORK. HE SHALL CHECK CAREFULLY, BY WHATEVER MEANS ARE REQUIRED, TO INSURE THAT HIS WORK AND ADJACENT RELATED WORK WILL FINISH TO PROPER CONTOURS, PLANS, AND LEVELS. HE SHALL PROMPTLY NOTIFY THE GENERAL CONTRACTOR OF ANY DEFECTS OR IMPERFECTIONS IN PREPARATORY WORKS WHICH WILL IN ANY WAY AFFECT SATISFACTORY COMPLETION ON HIS WORK. ABSENCE OF SUCH NOTIFICATION WILL BE CONSTRUED AS AN ACCEPTANCE OF PREPARATORY WORK, AND LATER CLAIMS OF DEFECTS THEREIN WILL NOT BE RECOGNIZED.
28. UNDER NO CONDITION SHALL WORK PROCEED PRIOR TO PREPARATORY WORK HAVING BEEN COMAPACTED, CURED, DRIED, AND/OR OTHERWISE MADE SATISFACTORY TO RECEIVE SUCH RELATED WORK. RESPONSABILITY FOR TIMELY INSTALLATION OF ALL MATERIALS RESTS SOLELY WITH THE GENERAL CONTRACTOR WHO WILL MAINTAIN COORDINATION AT ALL TIMES.
29. DO NOT CUT-AND-PATCH STRUCTURAL WORK IN A MANNER RESULTING IN A REDUCTION OF LOAD CARRYING CAPACITY OR LOAD/DEFLECTION RATIO. DO NOT CUT-AND-PATCH OPERATIONAL ELEMENTS AND SAFETY-RELATED COMPONENTS IN A MANNER RESULTING IN A REDUCTION OF CAPACITIES TO PERFORM IN THE MANNER INTENDED OR RESULTING IN DECREASED OPERATIONAL LIFE, INCREASES MAINTENANCE, OR DECREASED SAFETY. DO NOT CUT-AND-PATCH WORK WICH IS EXPOSED ON THE EXTERIOR OR EXPOSED IN OCCUPIED SPACES OF THE BUILDING, IN A MANNER RESULTING IN A REDUCTION OF VISUAL QUALITIES, OR RESULTING IN SUBSTANCIAL EVIDENCE OF THE CUT-AND-PATCH WORK, AS JUDGED SOLELY BY THE STRUCTURAL ENGINEER. REMOVE AND REPLACE WORK JUDGED BY THE ARCHITECT TO BE UNSATISFACTORY.
30. ALL OPENING THROUGH FIRE-RATED WALLS SHALL BE PROTECTED WITH RATED ASSEMBLIES IN ACCORDANCE WITH THE REQUIRENTS OF STANDARDS BUILDING CODE AND N.F.P.A.
31. THE GENERAL CONTRACTOR SHALL BE RESPONSIBLE FOR ALL CONSTRUCTION SCHEDULING, AND SHALL BE RESPONSIBLE TO SEE THAT THE WORK IS DONE IN A TIMELY MANNER & ACCORDING TO PLANS A PROGRESS SCHEDULE SHALL BE PREPARED AND SUBMITTED AS REQUIRED BY THE OWNER. THE ARCHITECT OR ENGINEER IS NOT RESPONSIBLE FOR ANY UNFORESEEN HIDDEN CONDITIONS DURING CONSTRUCTION. THESE WILL BE ADDRESSED AND BILLED SEPARATELY ACCORDING TO TYPE OF EXISTING CONDITION ON SITE.
32. THE GENERAL CONTRACTOR SHALL NOT ALLOW OR DIRECT MATERIALS OF ANY TRADE TO BE INSTALLED PREMATURELY, WHEN IT IS OBVIOUS THAT SUCH MATERIALS MAY BE DAMAGED BY SUBSEQUENT WORK OF OTHER TRADES. THE GENERAL CONTRACTOR SHALL TAKE SUCH STEPS AS ARE NECESSARY TO PROTECT SUCH COMPLETED WORK, EXCEPT WHEN SUCH WORK IS EXPRESSLY SPECIFIED TO BE PROTECTED BY THE SUB-CONTRACTOR INSTALLING THE WORK.
33. MISUNDERSTANDIGS OR MISCUMUNICATIONS BETWEEN THE GENERAL CONTRACTOR AND ALL SUBCONTRACTORS SHALL NOT BE THE RESPONSABILITY OF THE ARCHITECT AND OR ENGINEER, AND FURTHER THE ARCHITECT AND OR ENGINEER SHALL NOT SERVE AS REFEREE OR MIDDLE PERSON BETWEEN ANY MISUNDERSTANDIGS OR MISCUMUNICATIONS BETWEEN THE OWNER,GENERAL CONTRACTOR AND ALL SUBCONTRACTORS.

INTRUSION NOTES:

1. ALL LOCKS ON EXTERIOR DOORS SHALL BE CAPABLE OF RESISTING A FORCE OF 300 LBS. APPLIED IN ANY MOVABLE DIRECTION.
2. ALL SINGLE EXTERIOR SWING DOORS SHALL HAVE A LOCK TO BE KEY OPERATED FROM EXTERIOR WITH A MINIMUM OF 6000 POSSIBLE KEY CHANGES OR LOCKING COMBINATIONS IF KEY LOCK IS USED, THERE SHALL BE AN AUXILIARY SINGLE DEAD BOLT WITH HARDENED BOLT OR INSERTS.
3. THE ACTIVE LEAF OF PAIR OF EXTERIOR SWING DOORS SHALL HAVE SAME LOCKS AS REQUIRED FOR SINGLE EXTERIOR SWING DOORS. THE INACTIVE LEAF OF THESE PAIR OF DOORS SHALL HAVE MULTIPLE POINT LOCKS WITH 5/8" MINIMUM THROW BOLTS WITH INSERTS.
4. SLIDING GLASS DOORS SHALL BE PROVIDED WITH SLIDING DOOR DEAD BOLT OR A PIN NOT REMOVABLE OR OPERABLE FROM THE EXTERIOR AT THE JAMB, SILL, HEAD OR MEETING MULLIONS. THESE DOORS SHALL BE REINFORCED IN THE STRIKE AND LOCK AREA TO MAINTAIN BOLT STRENGTH EFFECTIVENESS IF NECESSARY AND SUCH DOORS SHALL HAVE NO SCREWS REMOVABLE FROM OUTSIDE WHICH WOULD FACILITATE READY ENTRY FROM OUTSIDE.
5. OVERHEAD DOORS SHALL BE PROVIDED WITH MULTIPLE POINT LOCKS OR BE LOCKED AT MORE THAN ONE POINT WITH HARDENED BOLTS OR BOLTS WITH INSERTS ENGAGING AT LEAST TWO OPPOSITE POINTS A MINIMUM OF 5/8". OTHER LOCKING DEVICES SHALL NOT BE REQUIRED WHERE SUCH DOORS ARE CONTROLLED AND LOCKED BY ELECTRIC POWER.
6. HINGES ON EXTERIOR OUT SWINGING DOORS SHALL HAVE NON-EXPOSED SCREWS AND NON PINS.
7. JAMBS OF ALL EXTERIOR OFFSET TYPE IN-SWINGING DOORS SHALL BE RABBET OR OF SIMILAR FABRICATION TO PREVENT DEFEATING THE PURPOSE OF THE STRIKE AND THE INTEGRITY OF LOCKS AND LATCHES.
8. SINGLE SWINGING EXTERIOR DOORS, IF WOOD, SHALL BE SOLID CORE OF NOT LESS THAN 1 3/8" THICK.
9. GLASS IN EXTERIOR DOORS SHALL COMPLY WITH THE AMERICAN NATIONAL STANDARDS INSTITUTES Z97.1.
10. VISION PANELS IN EXTERIOR DOORS, OTHER THAN GLAZING WITHIN 40" OF THE INSIDE LOCKING ACTIVATING DEVICE OF LOCKS AND SWINGING GLASS DOORS SHALL COMPLY WITH AMERICAN NATIONAL STANDARDS INSTITUTE, STANDARD Z97.1.
11. SLIDING GLASS DOORS AND WINDOWS SHALL NOT BE INSTALLED CLOSER THAN 40" TO THE INSIDE LOCK ACTIVATING DEVICE.
12. VENTS IN OVERHEAD GARAGE TYPE DOORS SHALL NOT BE INSTALLED CLOSER THAN 40" TO THE INSIDE LOCK ACTIVATING DEVICE.
13. SINGLE SWING EXTERIOR AND SWING DOORS CONNECTING LIVING AREAS WITH GARAGE AREAS SHALL BE SECURED WITH A LATCH AND A SINGLE DEAD BOLT WITH ONE INCH MINIMUM THROWS OR A COMBINATION OF DEAD LATCH AND DEAD BOLT SETS WITH LATCH THROW A MINIMUM OF 1/2" AND BOLTS HAVING A 1" MINIMUM THROW. DOORS SHALL BE A MINIMUM OF 1 3/8" THICK SOLID CORE.
14. FRONT MAIN ENTRANCE DOORS SHALL BE PROVIDED WITH A SCOPE OR VISION PANELS.

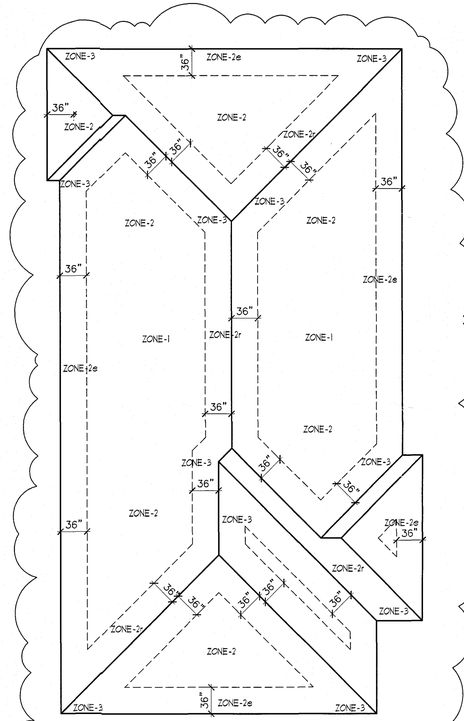

ROOF ZONE/DIAPHRAM REFERENCE PLAN

SCALE:1/8"=1'-0"

AS PER ASCE 7-16

ROOF GROSS PRESSURE (ASD DESIGN)			
ZONE-1	+16.29	-40.05	
ZONE-2e	+16.29	-43.45	
ZONE-2r	+16.29	-50.23	
ZONE-3	+16.29	-43.45	

NOTE: ALL NEW ROOFING SYSTEM-MATERIALS TO HAVE A VALID N.O.A., PRODUCT APPROVALS & TO BE SUBMITTED FOR REVIEW AT TIME OF ROOFING PERMIT APPLICATION UNDER SEPARATE SUB PERMIT.

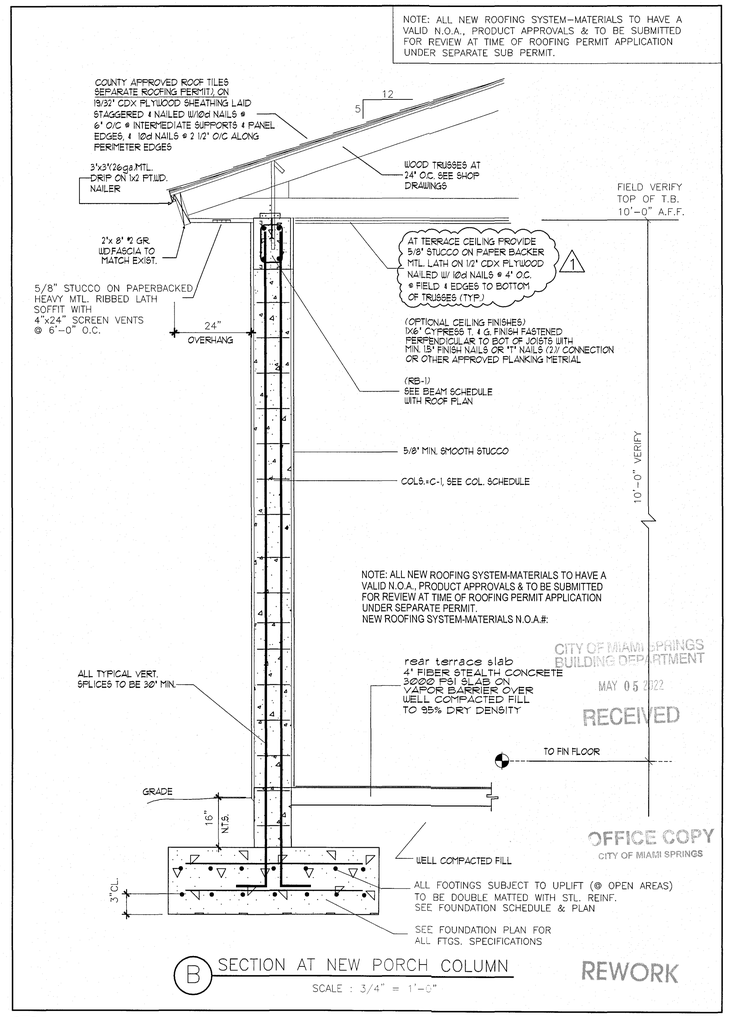

B SECTION AT NEW PORCH COLUMN

SCALE : 3/4" = 1'-0"

REWORK

CITY OF MIAMI SPRINGS BUILDING DEPARTMENT
MAY 05 2022
RECEIVED

OFFICE COPY
CITY OF MIAMI SPRINGS

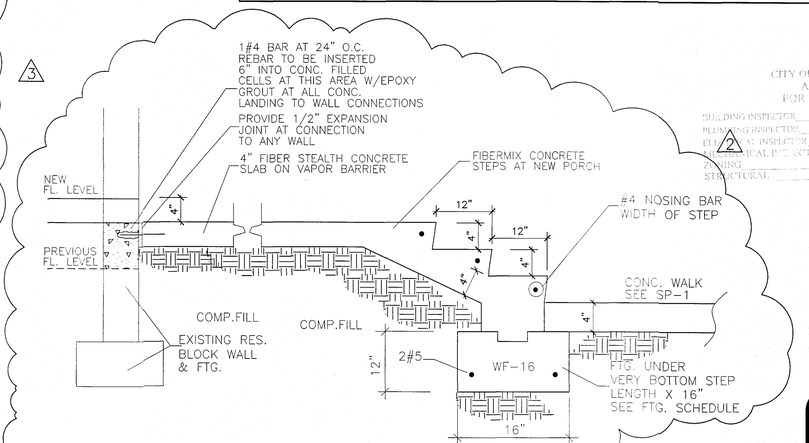

C TYP. CONCRETE STEPS ON GRADE

3/4"=1'

CITY OF MIAMI SPRINGS APPROVED FOR PERMIT ONLY

BUILDING INSPECTOR
PLUMBING INSPECTOR
ELECTRICAL INSPECTOR
MECHANICAL INSPECTOR
ZONING
STRUCTURAL

5/9/22

NO.	DATE
1	3-23-22 REVISED TO COMPLY WITH CITY COMMENTS
2	3-23-22 REVISED TO COMPLY WITH CITY COMMENTS
3	4-29-22 REVISED TO COMPLY WITH structural COMMENTS
•	•

DESG • DRWN • CHKD • APPV • DATE •

PROJECT NAME: ADDITION TO RESIDENCE FOR:
OWNER/PH: AMBAR PREVAL 786-587-7391
ADDRESS:200 N. ESPLANADE DRIVE MIAMI SPRINGS, FLORIDA 33166
PROJECT ADD: SAME

Guillermo Ramon Gonzalez
9000 SW. 168th Avenue Miami Florida 33196 Ph:305-484-8171
Registered Architect #13960 Ph:786-237-5154 (assistant)

STATE OF FLORIDA REGISTERED ARCHITECT GUILLERMO RAMON GONZALEZ AR013960

Guillermo Ramon Gonzalez
R.A. 13960
STATE OF FLORIDA

101521

A-6

OTHER NOTES:

1. ALL CONSTRUCTION SHALL CONFORM TO THE FOLLOWING:
   A. THESE GENERAL NOTES AND DRAWINGS
   B. ALL APPLICABLE LOCAL AND STATE CODES, ORDINANCES AND REGULATIONS.

2. DIMENSIONS:
   A. ALL DIMENSIONS SHALL HAVE PREFERENCE OVER SCALE
   B. ALL DIMENSIONS ARE TO FACE OF STUD, OR FACE OF C.M.U. UNLESS OTHERWISE NOTED
   C. CEILING HEIGHT DIMENSIONS ARE FROM FINISH FLOOR SLAB, TO FINISH FACE OF CEILING JOIST.

3. WHEN SYMBOL IS ADJACENT TO A GIVEN DIMENSION, IT INDICATES THAT THE ACTUAL DIMENSION MIGHT VARY DUE TO EXISTING CONDITIONS.

4. VERIFY ALL DIMENSIONS AND ELEVATIONS PRIOR TO STARTING WORK AND INMEDIATELY NOTIFY THE ARCHITECT OF ANY DISCREPANCIES BETWEEN THE GIVEN DIMENSIONS AND THE ACTUAL DIMENSIONS FOR RESOLUTION BEFORE PROCEEDING WITH THE WORK.

5. WHERE NO CONSTRUCTION DETAILS ARE SHOWN OR NOTED FOR ANY PART OF WORK, SUCH DETAILS SHALL BE SIMILAR TO THOSE SHOWN FOR OTHER SIMILAR CONDITION AND SHALL BE USED SUBJECT TO REVIEW BY THE ARCHITECT (MEANING PAY ATTENTION TO WHAT YOU ARE DOING ON THE JOB SITE).

6. PROVIDE ACCESS PANELS TO ALL CONCEALED SPACES (I.E. ATTICTS, VOID SPACES, ETC.) AS REQUIRED BY THE BUILDING CODE AND LOCAL GOVERNING AUTHORITIES.

7. INSTALL ALL CABINETS, EQUIPMENT, AND FIXTURES UNDER THIS CONTRACT IN ACCORDANCE WITH THE APPLICABLE PORTIONS OF THE CONSTRUCTION DOCUMENTS.

8. ALL OPENINGS AT JOINTS ON WINDOWS, WALL SOLE PLATES, OPENINGS FOR UTILTY PIPING AND WIRING ETC. SHALL BE CAULKED AND SEALED.

9. ELECTRICAL AND COMMUNICATIONS SYSTEM RECEPTACLES ON WALLS SHALL BE MOUNTED NO LESS THAN 12 INCHES ABOVE THE FLOOR. THESE REQUIREMENTS DO NOT APPLY WHERE THE USE OF SPECIAL EQUIPMENT DICTATES OTHERWISE OR WHERE ELECTRICAL AND COMMUNICATIONS SYSTEMS RECEPTACLES ARE NOT NORMALLY INTENTED FOR USE BY BUILDING OCCUPANTS.

10. NEITHER THE OWNER OR THE ARCHITECT SHALL ENFORCE SAFETY MEASURES OR REGULATIONS. CONTRACTOR SHALL DESIGN, CONSTRUCT AND MAINTAIN ALL SAFETY DEVICES INCLUDING SHORING AND BRACING AND SHALL BE SOLELY RESPONSIBLE FOR CONFORMING TO ALL LOCAL, STATE AND FEDERAL SAFETY AND HEALTH REGULATIONS, STANDARDS AND LAWS.

11. The Architect or Engineer ASSUMES NO RESPONSIBILITY RELATING TO ANY HAZARDOUS OR TOXIC MATERIALS, INCLUDING ASBESTOS, AND ASSUMES NO RESPONSABILITY RELATING TO ITS EXISTENCE OR REMOVAL. THE OWNER SHALL TAKE ACTION FOR DIRECTLY CONTRACTING WITH A CONSULTANT OR SPECIALIST FOR SUCH, LICENSED BY THE STATE OF FLORIDA, SHOULD THOSE SERVICES BE REQUIRED ON THE PROJECT.

12. THESE PLANS ARE NOT TO BE REPRODUCED, CHANGED OR COPIED IN ANY FORM OR MANNER WHATSOEVER, NOR ARE THEY TO BE ASSIGNED TO A THIRD PARTY WITHOUT FIRST OBTAINING THE WRITTEN PERMISSION AND CONSENT OF THE ARCHITECT. IN THE EVENT OF UNAUTHORIZED USE OF THESE PLANS BY A THIRD PARTY, THE THIRD PARTY SHALL HOLD THE ARCHITECT HARMLESS AND PAY ALL ATTORNEY FEES AND COURT COSTS IN THE EVENT OF LITIGATION.

13. COORDINATE AND VERIFY WITH THE PLUMBING, MECHANICAL, AND ELECTRICAL TRADES, THE SIZES AND LOCATION OF ALL PIPING, DUSCTWORK, TRENCHES, SLEEVES, SPECIAL BOLTINGFOR EQUIPMENT CONDUITS, ETC. THROUGH AND UNDER FLOOR SLABS.

14. THE USE OF THE WORD "PROVIDE" IN CONNECTION WITH ANY ITEM SPECIFIED, IS INTENTED TO MEAN THAT SUCH SHALL BE FURNISHED, INSTALLED AND CONNECTED. WHERE SO REQUIRED, EXCEPT AS NOTED OTHERWISE.

15. SUBMIT ALL PERTINENT SHOP DRAWINGS TO THE ARCHITECT FOR REVIEW PRIOR TO FABRICATION AND INSTALLATION, ALLOWING SUFFICIENT TIME FOR REVIEW AND CORRECTIVE ACTION SHOULD IT BE REQUIRED. SUBMIT CATALOG CUTS OF ALL FIXTURES AND EQUIPMENT, AND SAMPLES OF ALL FINISHES SPECIFIED FOR APPROVAL PRIOR TO FABRICATION AND INSTALLATION. SUBMIT IN TRIPLICATE.

16. PRIOR TO SUBMITTAL OF BID, NOTIFY THE ARCHITECT IN WRITING OF SPECIFIED MATERIALS OR EQUIPMENT WHICH ARE EITHER UNAVAILABLE OR WILL CAUSE A DELAY IN THE CONSTRUCTION COMPLETION SCHEDULE INCLUDE SUFFICIENT INFORMATION FOR EVALUATION OF ANY PROPOSED ALTERNATES.

17. SUPPLY TEMPORARY ELECTRICAL POWER IF REQUIRED TO THE JOB SITE FOR USE BY ALL CONSTRUCTION TRADES PRIOR TO THE HOOK-UP OF SPECIFIED ELECTRICAL WORK. INCLUDE SUFFICIENT INFORMATION FOR EVALUATION OF ANY PROPOSED ALTERNATES. ALSO ANY UPGRADES ON ANY ITEMS OR MATERIALS SHOWN OR NOT SHOWN ON THESE PLANS ARE STRICTLY BETWEEN THE CONTRACTOR & THE OWNER.

18. PROVIDE AND MAINTAIN TEMPORARY BARRICADES, FENCES, ENCLOSURE WALLS, ETC. AS REQUIRED TO PROTECT THE PUBLIC DURING THE PERIOD OF CONSTRUCTION.

19. PREPARE ALL FLOORS TO RECEIVE FINISHES INDICATED. ANY SURFACE DEFECTS AND IRREGULARITIES SHALL BE FILLED AND LEVELED. FLOOR SURFACES ARE TO BE LEVEL, CLEAN AND SMOOTH, MEETING THE MANUFACTURER'S SPECIFICATIONS, PRIOR TO INSTALLATION OF ANY FLOOR COVERING.

20. MAINTAIN THE JOB SITE IN A CLEAN, ORDERLY CONDITION FREE OF DEBRIS AND LITTER. REMOVE ALL TRASH AND DEBRIS AS A RESULT OF THE OPERATION ON A REGULAR BASIS DURING AND INMEDIATELY UPON COMPLETION OF EACH PHASE OF WORK.

21. ALL MATERIALS STORED ON THE SITE SHALL BE PROPERLY STACKED AND PROTECTED TO PREVENT DAMAGE AND DETERIORATION UNTILL USED. FAILURE TO PROTECT MATERIALS MAY BE CAUSE FOR REJECTION OF WORK.

22. PROVIDE ALL NECESSARY BLOCKING, BACKING AND FRAMING FOR LIGHT FIXTURES, ELECTRICAL UNITS, H.V.A.C. EQUIPMENT AND ALL OTHER ITEMS REQUIRING SAME.

23. ALL PIPING AND CONDUIT SHALL BE IN WALLS OR FURRED SPACES, UNLESS NOTED OTHERWISE.

24. MECHANICAL UNITS SHALL BE ANCHORED PER HURRICANE CODE.

25. OUTLETS AND TELEPHONES BACK IN A WALL SHALL BE SEPARATED BY A MINIMUM OF ONE STUD SPACE.

26. CONTRACTOR IS TO MAKE EXACT DETERMINATION AS TO THE LOCATION OF ALL EXISTING UTILITIES. DO NOT BEGIN WORK UNTIL THIS HAS BEEN DONE. CONTRACTOR IS FULLY RESPONSIBLE FOR DAMAGE CAUSED BY FAILURY TO LOCATE AND PRESERVE UTILITIES.

27. BEFORE STARTING A SECTION OF WORK, THE CONTRACTOR AND/OR HIS SUBCONTRACTOR SHALL CAREFULLY EXAMINE ALL PREPARATORY WORK THAT HAS BEEN EXECUTED TO RECEIVE HIS WORK. HE SHALL CHECK CAREFULLY, BY WHATEVER MEANS ARE REQUIRED, TO INSURE THAT HIS WORK AND ADJACENT RELATED WORK WILL FINISH TO PROPER CONTOURS, PLANS, AND LEVELS. HE SHALL PROMPTLY NOTIFY THE GENERAL CONTRACTOR OF ANY DEFECTS OR IMPERFECTIONS IN PREPARATORY WORKS WHICH WILL IN ANY WAY AFFECT SATISFACTORY COMPLETION ON HIS WORK.
ABSENCE OF SUCH NOTIFICATION WILL BE CONSTRUED AS AN ACCEPTANCE OF PREPARATORY WORK, AND LATER CLAIMS OF DEFECTS THEREIN WILL NOT BE RECOGNIZED.

28. UNDER NO CONDITION SHALL WORK PROCEED PRIOR TO PREPARATORY WORK HAVING BEEN COMAPACTED, CURED, DRIED, AND/OR OTHERWISE MADE SATISFACTORY TO RECEIVE SUCH RELATED WORK. RESPONSABILITY FOR TIMELY INSTALLATION OF ALL MATERIALS RESTS SOLELY WITH THE GENERAL CONTRACTOR WHO WILL MAINTAIN COORDINATION AT ALL TIMES.

29. DO NOT CUT-AND-PATCH STRUCTURAL WORK IN A MANNER RESULTING IN A REDUCTION OF LOAD CARRYING CAPACITY OR LOAD/DEFLECTION RATIO. DO NOT CUT-AND-PATCH OPERATIONAL ELEMENTS AND SAFETY-RELATED COMPONENTS IN A MANNER RESULTING IN A REDUCTION OF CAPACITIES TO PERFORM IN THE MANNER INTENDED OR RESULTING IN DECREASED OPERATIONAL LIFE, INCREASES MAINTENANCE, OR DECREASED SAFETY. DO NOT CUT-AND-PATCH WORK WICH IS EXPOSED ON THE EXTERIOR OR EXPOSED IN OCCUPIED SPACES OF THE BUILDING, IN A MANNER RESULTING IN A REDUCTION OF VISUAL QUALITIES, OR RESULTING IN SUBSTANCIAL EVIDENCE OF THE CUT-AND-PATCH WORK, AS JUDGED SOLELY BY THE STRUCTURAL ENGINEER. REMOVE AND REPLACE WORK JUDGED BY THE ARCHITECT TO BE UNSATISFACTORY.

30. ALL OPENING THROUGH FIRE-RATED WALLS SHALL BE PROTECTED WITH RATED ASSEMBLIES IN ACCORDANCE WITH THE REQUIRENTS OF STANDARDS BUILDING CODE AND N.F.P.A.

31. THE GENERAL CONTRACTOR SHALL BE RESPONSIBLE FOR ALL CONSTRUCTION SCHEDULING, AND SHALL BE RESPONSIBLE TO SEE THAT THE WORK IS DONE IN A TIMELY MANNER & ACCORDING TO PLANS .A PROGRESS SCHEDULE SHALL BE PREPARED AND SUBMITTED AS REQUIRED BY THE OWNER. THE ARCHITECT OR ENGINEER IS NOT RESPONSIBLE FOR ANY UNFORESEEN HIDDEN CONDITIONS DURING CONSTRUCTION. THESE WILL BE ADDRESSED AND BILLED SEPARATELY ACCORDING TO TYPE OF EXISTING CONDITION ON SITE.

32. THE GENERAL CONTRACTOR SHALL NOT ALLOW OR DIRECT MATERIALS OF ANY TRADE TO BE INSTALLED PREMATURELY, WHEN IT IS OBVIOUS THAT SUCH MATERIALS MAY BE DAMAGED BY SUBSEQUENT WORK OF OTHER TRADES. THE GENERAL CONTRACTOR SHALL TAKE SUCH STEPS AS ARE NECESSARY TO PROTECT SUCH COMPLETED WORK, EXCEPT WHEN SUCH WORK IS EXPRESSLY SPECIFIED TO BE PROTECTED BY THE SUB-CONTRACTOR INSTALLING THE WORK.

33. MISUNDERSTANDIGS OR MISCUMUNICATIONS BETWEEN THE GENERAL CONTRACTOR AND ALL SUBCONTRACTORS SHALL NOT BE THE RESPONSABILITY OF THE ARCHITECT AND OR ENGINEER, AND FURTHER THE ARCHITECT AND OR ENGINEER SHALL NOT SERVE AS REFEREE OR MIDDLE PERSON BETWEEN ANY MISUNDERSTANDIGS OR MISCUMUNICATIONS BETWEEN THE OWNER,GENERAL CONTRACTOR AND ALL SUBCONTRACTORS.

INTRUSION NOTES:

1. ALL LOCKS ON EXTERIOR DOORS SHALL BE CAPABLE OF RESISTING A FORCE OF 300 LBS. APPLIED IN ANY MOVABLE DIRECTION.
2. ALL SINGLE EXTERIOR SWING DOORS SHALL HAVE A LOCK TO BE KEY OPERATED FROM EXTERIOR WITH A MINIMUM OF 6000 POSSIBLE KEY CHANGES OR LOCKING COMBINATIONS IF KEY LOCK IS USED, THERE SHALL BE AN AUXILIARY SINGLE DEAD BOLT WITH HARDENED BOLT OR INSERTS.
3. THE ACTIVE LEAF OF PAIR OF EXTERIOR SWING DOORS SHALL HAVE SAME LOCKS AS REQUIRED FOR SINGLE EXTERIOR SWING DOORS. THE INACTIVE LEAF OF THESE PAIR OF DOORS SHALL HAVE MULTIPLE POINT LOCKS WITH 5/8" MINIMUM THROW BOLTS WITH INSERTS.
4. SLIDING GLASS DOORS SHALL BE PROVIDED WITH SLIDING DOOR DEAD BOLT OR A PIN NOT REMOVABLE OR OPERABLE FROM THE EXTERIOR AT THE JAMB, SILL, HEAD OR MEETING MULLIONS. THESE DOORS SHALL BE REINFORCED IN THE STRIKE AND LOCK AREA TO MAINTAIN BOLT STRENGTH EFFECTIVENESS IF NECESSARY AND SUCH DOORS SHALL HAVE NO SCREWS REMOVABLE FROM OUTSIDE WHICH WOULD FACILITATE READY ENTRY FROM OUTSIDE.
5. OVERHEAD DOORS SHALL BE PROVIDED WITH MULTIPLE POINT LOCKS OR BE LOCKED AT MORE THAN ONE POINT WITH HARDENED BOLTS OR BOLTS WITH INSERTS ENGAGING AT LEAST TWO OPPOSITE POINTS A MINIMUM OF 5/8". OTHER LOCKING DEVICES SHALL NOT BE REQUIRED WHERE SUCH DOORS ARE CONTROLLED AND LOCKED BY ELECTRIC POWER.
6. HINGES ON EXTERIOR OUT SWINGING DOORS SHALL HAVE NON-EXPOSED SCREWS AND NON PINS.
7. JAMBS OF ALL EXTERIOR OFFSET TYPE IN-SWINGING DOORS SHALL BE RABBET OR OF SIMILAR FABRICATION TO PREVENT DEFEATING THE PURPOSE OF THE STRIKE AND THE INTEGRITY OF LOCKS AND LATCHES.
8. SINGLE SWINGING EXTERIOR DOORS, IF WOOD, SHALL BE SOLID CORE OF NOT LESS THAN 1 3/8" THICK.
9. GLASS IN EXTERIOR DOORS SHALL COMPLY WITH THE AMERICAN NATIONAL STANDARDS INSTITUTES Z97.1.
10. VISION PANELS IN EXTERIOR DOORS, OTHER THAN GLAZING WITHIN 40" OF THE INSIDE LOCKING ACTIVATING DEVICE OF LOCKS AND SWINGING GLASS DOORS SHALL COMPLY WITH AMERICAN NATIONAL STANDARDS INSTITUTE, STANDARD Z97.1.
11. SLIDING GLASS DOORS AND WINDOWS SHALL NOT BE INSTALLED CLOSER THAN 40" TO THE INSIDE LOCK ACTIVATING DEVICE.
12. VENTS IN OVERHEAD GARAGE TYPE DOORS SHALL NOT BE INSTALLED CLOSER THAN 40" TO THE INSIDE LOCK ACTIVATING DEVICE.
13. SINGLE SWING EXTERIOR AND SWING DOORS CONNECTING LIVING AREAS WITH GARAGE AREAS SHALL BE SECURED WITH A LATCH AND A SINGLE DEAD BOLT WITH ONE INCH MINIMUM THROWS OR A COMBINATION OF DEAD LATCH AND DEAD BOLT SETS WITH LATCH THROW A MINIMUM OF 1/2" AND BOLTS HAVING A 1" MINIMUM THROW. DOORS SHALL BE A MINIMUM OF 1 3/8" THICK SOLID CORE.
14. FRONT MAIN ENTRANCE DOORS SHALL BE PROVIDED WITH A SCOPE OR VISION PANELS.

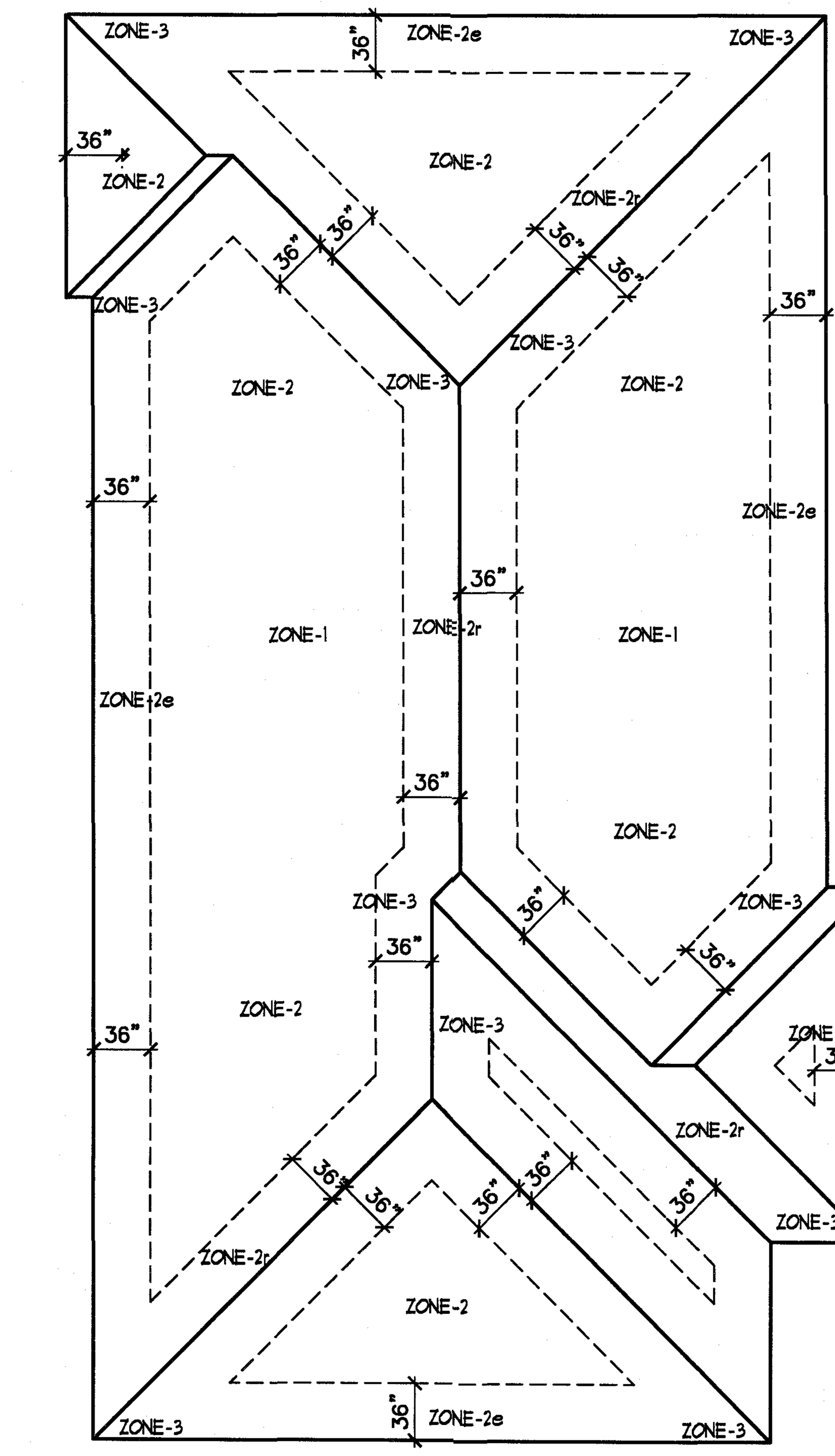

ROOF ZONE/DIAPHRAM REFERENCE PLAN

SCALE:1/8"=1'-0"

AS PER ASCE 7-16

ROOF GROSS PRESSURE (ASD DESIGN)			
ZONE-1	+16.29	-40.05	
ZONE-2e	+16.29	-43.45	
ZONE-2r	+16.29	-50.23	
ZONE-3	+16.29	-43.45	

CITY OF MIAMI SPRINGS APPROVED FOR PERMIT ONLY

Guillermo Ramon Gonzalez
R.A. 13960
STATE OF FLORIDA

PROJECT NAME: ADDITION TO RESIDENCE FOR:
OWNER/PH: AMBAR PREVAL 786-587-7391
ADDRESS:200 N. ESPLANADE DRIVE MIAMI SPRINGS, FLORIDA 33166
PROJECT ADD: SAME

Guillermo Ramon Gonzalez
9000 SW. 168th Avenue Miami Florida 33196 Ph:305-484-8171
Registered Architect #13960 Ph:786-237-5154 (assistant)

DESG	DRWN	CHKD	APRV	DATE
•	•	•	•	•

NO.	DATE
1	
2	•
3	•
4	•

101521

A-6

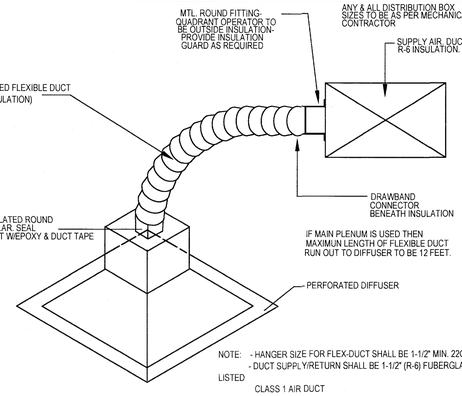

TYPICAL FLEXIBLE DUCT CONNECTION

N.T.S.

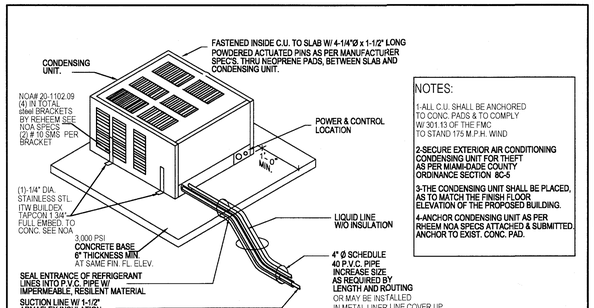

NOTES:

1-ALL C.U. SHALL BE ANCHORED TO CONC. PADS & TO COMPLY W/ 301.13 OF THE FMC TO STAND 175 M.P.H. WIND

2-SECURE EXTERIOR AIR CONDITIONING CONDENSING UNIT FOR THEFT AS PER MIAMI-DADE COUNTY ORDINANCE SECTION 8C-5

3-THE CONDENSING UNIT SHALL BE PLACED, AS TO MATCH THE FINISH FLOOR ELEVATION OF THE PROPOSED BUILDING.

4-ANCHOR CONDENSING UNIT AS PER RHEEM NOA SPECS ATTACHED & SUBMITTED. ANCHOR TO EXIST. CONC. PAD.

NEW CONDENSING UNIT DETAIL

N.T.S.

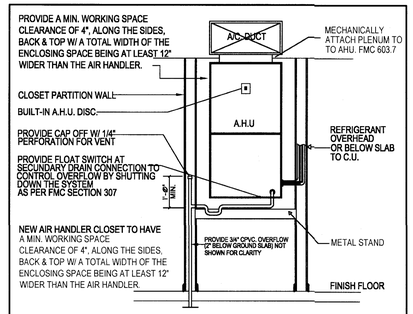

NEW AIR HANDLER UNIT DETAIL N.T.S.

NOTE 1: EXHAUST FAN SCHEDULE

MANUFACTURER:	NuTone
MODEL:	695
CFM:	50
SP:	0.10"
DRIVE:	DIRECT
LOCATION:	CEILING
ACCESORIES:	DRAFT DAMPER
NOTE:	USE DESIGNATED EXHAUST FAN OR APPROVED EQUAL

SUPPLY & RETURN GRILLES BY TUTUS OR APPROVED SIMILAR OR SUPPLY GRILLES MAYBE REGULAR RECTANGULAR TYPE

LINEAL SLOT MODEL ML 38, AND 39, COVER TYPE: 2B. (OR APPROVED EQUAL)
ALL OTHER SUPPLY GRILLES: 1 & 2 & 3 SLOTS PATTERN CONTROLLED, CONCEALED MOUNTING COVER, WHITE FINISH AND MPI- 8P DIFFUSER PLENUM W/ 1" INSULATION.

L4	ML 38, 2-(1") SLOTS, 4' LONG, 225 CFM
L3	ML 38, 2-(1") SLOTS, 3' LONG, 125 CFM

ALL OTHER SUPPLY AIR DIFFUSERS SIZES TO BE AS SHOWN

WHERE THE AIR INFILTRATION RATE IN A DWELLING UNIT IS LESS THAN 3 AIR CHANGES PER HOUR WHEN TESTED WITH A BLOWER DOOR AT A PRESSURE OF Ø.2-INCH WATER COLUMN (50 PA) IN ACCORDANCE WITH SECTION 402.4.1.2 OF THE FLORIDA BUILDING CODE, ENERGY CONSERVATION, THE DWELLING UNIT SHALL BE VENTILATED BY MECHANICAL MEANS IN ACCORDANCE WITH SECTION 403. FBC R-303.4.

AIR CONDITIONING SPLIT SYSTEM EQUIPMENT SCHEDULE

TOTAL CAPACITY, BTU/HR.	57000
NET SENSIBLE LOAD, BTU/HR.	40500
NET LATENT, BTU/HR.	16500
COOLING SEER	16
MANUFACTURER	Rheem
DESIGNATION	(AHRI 7943715)

AIR HANDLER UNIT — RH1T Series

DESIGNATION	A.H.U.
MODEL No:	RH1T6024STANJA
SUPPLY AIR, CFM	1600
FAN SPEED	HIGH
FAN MOTOR, HP - [W]	3/4 - [559]
ELECTRIC HEATER kW.	10.0
(VOLTS) - PHASE	(208/240) - 1/60
NET WEIGHT LBS.	159

UNIT DIMENSIONS: W=25", H=56", L=22"

CONDENSER UNIT — RA16 Series

DESIGNATION	C.U.
MODEL No:	RA1660AJ1NA
TOTAL KW.	6.5
CONDENSER ENT. AIR F.	95°
COMPRESOR RLA-LRA	23.7 - 152
FAN MOTOR FLA	3.5
(VOLTS) - PHASE	(208/230) - 1/60
NET WEIGHT LBS.	240

UNIT DIMENSIONS: W=36", H=51", L=36"

REFRIGERANT LINES: LIQUID LINE: 3/8" - VAPOR LINE: 7/8"
INSTALL MANUFACTURER'S RECOMMENDED THERMOSTAT
INSTALL DESIGNATED A/C SYSTEM OR APPROVED EQUAL

CONTRACTOR TO VERIFY A.H.U. UNIT DIMENSIONS WITH A.H.U. CLOSET., & C.U. DIMENSION WITH CONCRETE SLAB SIZE / F.F.E.

HVAC DESIGN REQUIREMENTS

	YES	NO
DUCT SMOKE DETECTOR		●
FIRE DAMPER(S)		●
SMOKE DAMPER(S)		●
FIRE RATED ENCLOSURE		●
FIRE RATED ROOF CEILING ASSEMBLY		●
FIRE STOPPING		●
SMOKE CONTROL		●
PROGRAMABLE THERMOSTAT	●	

H.V.A.C. NOTES:

1. ALL WORK SHALL BE PERFORMED IN ACCORDANCE WITH MECHANICAL OF "F.B.C." 2020 7th EDITION AND ALL OTHER PERTAINING CODES.
2. ALL WORK SHALL BE PERFORMED BY A LICENSED MECHANICAL CONTRACTOR, WORK TO BE IN THE ACCEPTANCE OF THE OWNER AND THE ENGINEER
3. THE CONTRACTOR SHALL HAVE VISITED THE JOB SITE BEFORE BIDDING AND FAILURE TO DO SO WILL NOT BE ACCEPTED AS A REASON FOR REQUESTING EXTRA PAY IN THE EVENT THAT THE EXISTING CONDITIONS RESULT IN EXTRA MATERIALS OR LABOR.
4. ALL WORK SHALL BE COORDINATED WITH OTHER TRADES TO AVOID INTERFERENCE WITH THE PROPER AND MECHANICAL CONSTRUCTION, ANY EXISTINGCONDITION FOUND AND/OR
5. INSULATE REFRIGERANT SUCTION PIPING WITH 1/2" CLOSED CELL POLYETHYLENE PRE-MOLDED PIPE INSULATION HAVING A THERMAL RESISTIVITY OF R-4 MIN. AS PER FBCR-M 1411.6
6. UNDERGROUND CONDENSE DRAIN LINE SHALL BE 2" DIA. MINIMUM
7. ALL REFRIGERANT COMPRESSORS SHALL BE WARRANTED FOR A MINIMUM OF 5 YEARS AFTER DATE OF ACCEPTANCE OF THE PROJECT.
8. ALL EQUIPMENT AS PER MANUFACTURER RECOMMENDATIONS TO ELIMINATE ANY EQUIPMENT NOISE AND VIBRATION
9. AFTER THE SYSTEM IS INSTALLED CONTRACTOR SHALL CONDUCT AN OPERATIVE TEST FOR APPROVAL AND ACCEPTANCE BY THE OWNER/ENGINEER SHALL BE GUARANTEED FOR A PERIOD OF 1 YEAR FROM THE DATE OF FINAL ACCEPTANCE THEREOF AGAINST DEFECTIVE MATERIALS AND WORKMANSHIP.
10. ALL EXHAUST DUCTS SHALL BE CONSTRUCTED OF SHEET METAL, TERMINATE OUTSIDE THE BUILDING, AND BE EQUIPPED WITH A BACK DRAFT DAMPER
11. DUCTS FROM TOILET ROOMS SHALL DISCHARGE TO THE OUTSIDE OF THE BUILDING, SHALL BE TERMINATED NOT LESS THAN 6" ABOVE THE FINISHED ROOF SURFACE AND SHALL BE SCREENED WITH A CORROSION RESISTANT MATERIAL HAVING A MESH SIZE NOT LARGER THAN 1/2". (SEE DTL. FOR GOOSE NECK OR RAIN CAP ON ROOF TERMINATION)
12. CLOTHES DRYERS EXHAUST DUCTS OR VENTS SHALL COMPLY WITH MANUFACTURE'S INSTAL-LATION INSTRUCTIONS, BE CONSTRUCTED OF A MIN. 26 GAUGE METAL PIPE, HAVING A SMOOTH INTERIOR SURFACE WITH JOINTS RUNNING IN THE DIRECTION OF THE AIR FLOW.
13. VENTILATION DUCTWORK SHALL BE GALVANIZED STEEL WITH GAUGES DUCT CONSTRUCTION BRACING AND SUSPENSION IN ACCORDANCE WITH THE RECOMMENDATIONS SET IN THE LATEST EDITION OF THE ASHRAE GIDE AND SMACNA STANDARDS

AIR CONDITIONING LEGEND

SYMBOL	LEGEND	SYMBOL	LEGEND
A.H.U.	AIR HANDLING UNIT	O.B.D.	OPPOSED BLADE DAMPER
C.U.	CONDENSING UNIT	T	THERMOSTAST
O.A.	OUTSIDE AIR		DUCTWORK
R/A	RETURN AIR	F.D.	FLEXIBLE DUCT
S.A.	SUPPLY AIR		SUPPLY AIR DIFUSSER
W.S.A.	WALL SUPPLY AIR		AXHAUST FAN
C.S.A.	CEILING SUPPLY AIR		MANUAL VOLUME DAMPER
RL & S	REFRIGERANT LIQUID & SUCTION PIPE	A	DENOTES AIR DISTRIBUTION DEVICE
CFM	CUBIC FEET PER INUTE		DISTRIBUTION BOX
M.V.D.	MANUAL VOLUME DAMPER	UC	UNDER CUT DOOR ABOVE FINISH FLOOR AS NOTED

REFRIGERANT CIRCUIT ACCESS PORTS LOCATED OUTDOORS SHALL BE FITTED WITH LOCKING-TYPE TAMPER-RESISTANT CAPS OR SHALL BE OTHERWISE SECURED TO PREVENT UNAUTHORIZED ACCESS UNLESS THE PORTS ARE LOCATED INSIDE THE CONDENSING UNIT CABINET (FBCR-M1411.8)

NOTE CODES IN EFFECT: & FBC 2020, 7th EDITION MECHANICAL.

NOTE: NEW HVAC SYSTEM MAY BE WHAT WAS SPECIFIED OR A DIFFERENT MAKE/MODEL APPROVED EQUAL TO MATCH SIZE CAP, BTUS, SEER, CFMS, ETC. MAYBE INSTALLED.

NOTE: AIR RETURN GRILLS MAY BE PLACED/INSTALLED ABOVE DOOR HEADERS, "AND OR CEILING GRILLS", BUT IN ANY CASE MUST COMPLY WITH "FMC-601.4"

NOTE: ALL DUCTWORK LAYOUT SHOWN IS PRIMARY SCHEMATICAL. ACTUAL DUCT SIZES & LAYOUT MAY VARY AS PER MECHANICAL CONTRACTOR LAYOUT

—W—> DENOTES: 1" DOOR UNDERCUT

AIR BALANCE NOTE:

1.Transfer ducts may achieve this by increasing the return transfer 11/2 times the cross sectional area (square inches) of the supply duct entering the room or space it is serving and the door having at least an unrestricted 1-inch undercut to achieve proper return air balance.
2.Transfer grilles shall use 50 square inches (of grille area) to 100 cfm (of supply air) for sizing through-the-wall transfer grilles and using an unrestricted 1-inch undercutting of doors to achieve proper return air balance.
3.Habitable rooms only shall be required to meet these requirements for proper balanced return air excluding bathrooms, closets, storage rooms and laundry rooms, except that all supply air into the master suite shall be included.

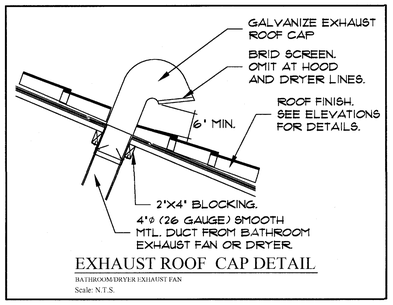

EXHAUST ROOF CAP DETAIL

BATHROOM/DRYER EXHAUST FAN

Scale: N.T.S.

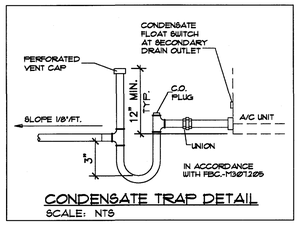

CONDENSATE TRAP DETAIL

SCALE: NTS

MECHANICAL SCOPE OF WORK:

REMOVE EXIST. HVAC SYSTEM. PROVIDE COMPLETE NEW HVAC SPLIT SYSTEM.
NEW SUPPLY AIR GRILLS WHERE REQUIRED AS SHOWN AT NEW/EXIST. AREAS
NEW DRYER EXHAUST VENT FOR NEW LAUNDRY ROOM LOCATION.
PROVIDE NEW EXHAUST FANS AT ALL NEW/EXIST. BATHROOMS AS SHOWN.
PROVIDE ALL NEW DUCT WORK, MAY VARY IN SIZE AS PER HVAC CONTRACTOR.
PROVIDE NEW RETURN AIR DUCTS/GRILLS AS SHOWN ON PLAN.
NEW TRANSFER RAGS. TO BE INSTALLED OVER DOOR HEADER OR IN CEILINGS.
PROVIDE 1" UNDERCUT AT ALL INTERIOR DOORS AS SHOWN.

NOTE: TRADE CONTRACTOR IS RESPONSIBLE FOR ANY COST EFFECTIVE REVISIONS TO PLANS IF ORIGINAL DESIGN OF APPROVED PLANS ARE NOT FOLLOWED. A DIFFERENT METHOD IN DESIGN MAY BE USED AFTER CONSTRUCTION & PERMIT DOCUMENTS ARE ACTIVE IN FIELD, BUT AGAIN TRADE CONTRACTOR WILL BE RESPONSIBLE FOR ANY INCURRED COSTS DUE TO ANY REQUIRED REVISION WORK ON THE ORIGINAL APPROVED PLANS. ANY AND ALL CHANGES TO PLANS MUST BE APPROVED BY THE ENGINEER OR ARCHITECT OF RECORD & BUILDING DEPT. AND WILL BE BILLED ACCORDINGLY.

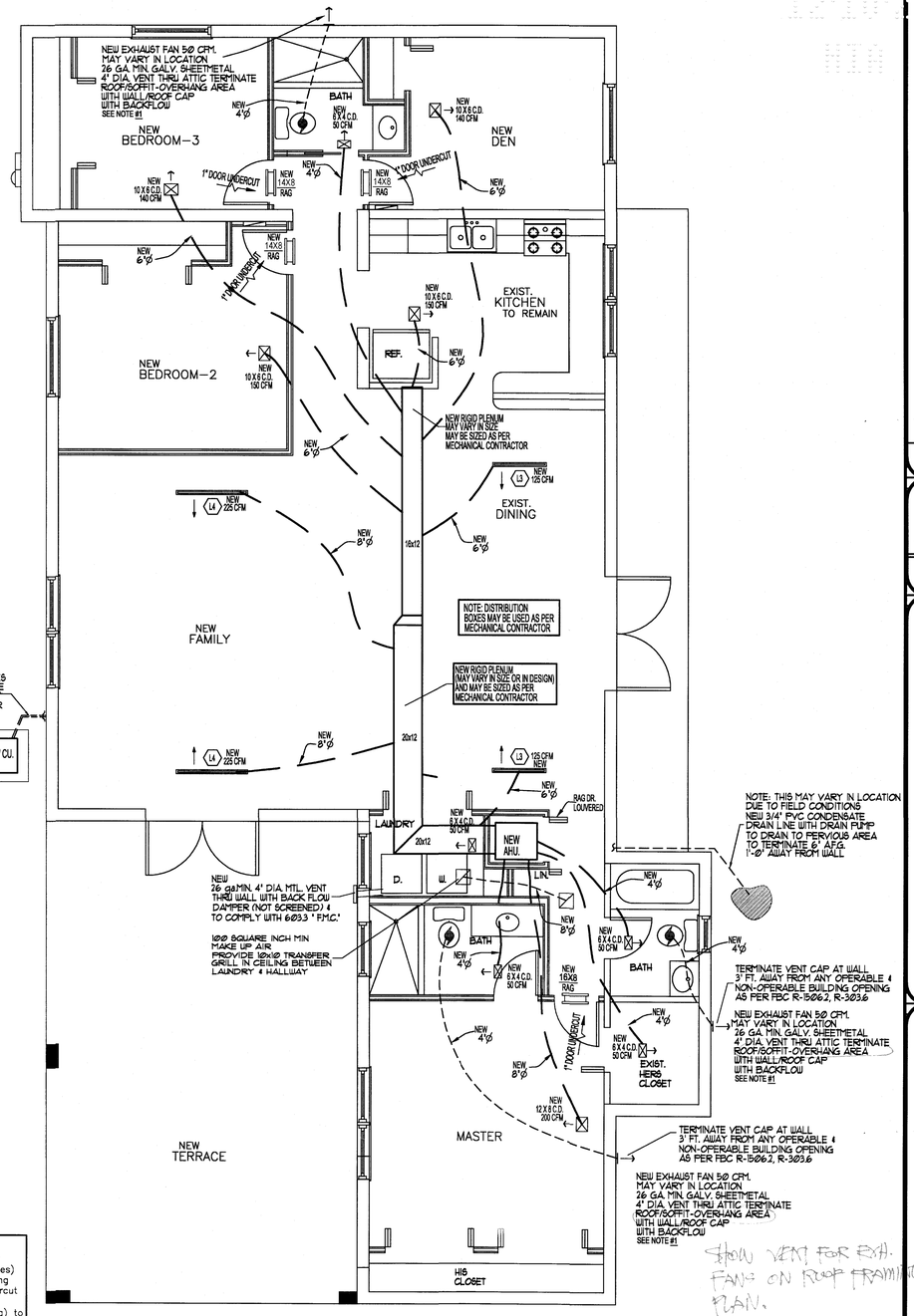

SHOW VENT FOR EXH. FANS ON ROOF FRAMING PLAN.

PROPOSED MECHANICAL FLOOR PLAN

SCALE: 1/4"=1'-0"

CITY OF MIAMI SPRINGS APPROVED FOR PERMIT ONLY

Guillermo Ramon Gonzalez
R.A. 13960
STATE OF FLORIDA

PROJECT NAME: ADDITION TO RESIDENCE FOR:
OWNER/PH: AMBAR PREVAL 786-587-7391
ADDRESS: 200 N. ESPLANADE DRIVE MIAMI SPRINGS, FLORIDA 33166
PROJECT ADD: SAME

NO. | DATE | DESG | DRWN | CHKD | APPV | DATE

Guillermo Ramon Gonzalez
9000 SW. 168th Avenue Miami Florida 33196 Ph:305-487-8171
Registered Architect #13960 Ph:786-237-8154 (assistant)

101521

M-1

ELECTRICAL NOTES:

1. ALL WORK SHALL BE PERFORMED IN ACCORDANCE WITH THE LATEST EDITION OF THE NEC, & NFPA-70 AND ALL OTHER PERTAINING CODES AND REGULATIONS ESTABLISHED BY AUTHORITIES HAVING JURISDICTION, AND SHALL MEET THE REQUIREMENTS OF OTHER RECOGNIZED STANDARDS AS THE ASTM,IEEE,NFPA AND NEMA,WHERE THE REQUIREMENTS OF SUCH STANDARDS ARE MORE STRINGENT THAN THOSE CITED ABOVE.
2. ALL WORK SHALL BE PERFORMED BY A LICENSED ELECTRICAL CONTRACTOR IN A FIRST CLASS MANNER, FULLY OPERATIVE, AND TO THE ACCEPTANCE OF THE OWNER AND THE ENGINEER.
3. ALL ELECTRICAL MATERIALS AND EQUIPMENT SHALL BE APPROVED BY U.L.AND SHALL BEAR THE U.L. LABEL.
4. THE PLANS ARE GENERALLY DIAGRAMMATIC AND THE CONTRACTOR SHALL COORDINATE HIS WORK WITH THE WORK OF OTHER TRADES SO THAT INTERFERENCE BETWEEN CONDUITS PIPING AND STRUCTURAL WORK WILL BE AVOIDED.
5. THE CONTRACTOR SHALL HAVE VISITED THE JOB SITE BEFORE BIDDING AND ASCERTAINED ALL EXISTING CONDITIONS WHICH WILL AFFECT HIS WORK. FAILURE TO DO SO WILL NOT BE ACCEPTED AS A REASON FOR REQUESTING EXTRA PAY IN THE EVENT THAT THE EXISTING CONDITIONS RESULT IN EXTRA MATERIALS OR LABOR.
6. ANY EXISTING CONDITION FOUND BY THE CONTRACTOR WHICH WILL ADVERSELY AFFECT THE WORK SHALL IMMEDIATELY BE BROUGHT TO THE ATTENTION OF THE OWNER AND/OR THE ENGINEER.
7. AFTER THE SYSTEM IS INSTALLED CONTRACTOR SHALL CONDUCT AN OPERATIVE TEST FOR APPROVAL AND ACCEPTANCE BY THE OWNER. EQUIPMENT SHALL BE GUARANTEED FOR A PERIOD OF 1 YEAR FROM THE DATE OF FINAL ACCEPTANCE THEREOF AGAINST DEFECTIVE MATERIALS AND WORKMANSHIP.
8. ALL CONDUCTORS SHALL BE SOFT COPPER WITH THW/THWN 600 VOLT INSULATION CONDUIT SHALL BE RGS OR IMC FOR EXTERIOR RUNS, EMT FOR CONCEALED AND INTERIOR RUNS NOT EXPOSED TO WEATHER OR MECHANICAL DAMAGE MAY BE USED UNDERGROUND WHERE BURIED 18" AND PROVIDED WITH A GROUND WIRE AS PER NEC 250.
9. TYPE "NM" GROUNDED COPPER CABLE AS MANUFACTURE BY "ROMEX" OR APPROVED EQUAL MAY BE USED WHERE IN PARTITIONS AND INTERIOR SPACES.
10. GROUNDING SHALL COMPLY WITH NEC 250 AND SHALL CONSIST OF COPPER CONDUCTORS IN CONDUIT WITH BOLTED OR BRAZED CONNECTIONS TO COLD WATER PIPE RODS, AND ALL AVAILABLE ELECTRODES. (NEC: 250.50).
    ALL METALLIC RACEWAYS SHALL BE GROUNDED.
11. MECHANICAL EQUIPMENT DISCONNECT SWITCHES SHALL BE PROVIDED WITH DUAL ELEMENT FUSES SIZED AS NOTED PER MANUFACTURER'S RECOMMENDATION VERIFY BEFORE INSTALLATION.
12. MOTORS, TRANSFORMERS AND MECHANICAL EQUIPMENT SHALL BE PROVIDED WITH GREEN FIELD FLEXIBLE CONNECTIONS, WATERTIGHT WHERE EXPOSED TO MOISTURE AND WEATHER CONDITIONS.
13. IF NO RISER DIAGRAM IS SHOWN AS PART OF THESE PLANS; CONNECT TO EXISTING PANEL, RAISE CAPACITY OF PANEL & SERVICE IF REQUIRED.

F.E.M.A. NOTES:

1. ELECTRICAL OUTLETS (RECEPTACLES AND LIGHTING) BELOW BASE FLOOD ELEVATION SHALL BE INSTALLED AT HIGHEST PERMITTED ELEVATION AND SHALL BE INSTALLED ON (SEPARATE) INDEPENDENT CIRCUITS FROM THOSE IN THE HABITAT AREAS.
2. NO APPLIANCES OR APPLIANCES OUTLETS SHALL BE INSTALLED BELOW BASE FLOOD ELEVATION.
3. A/C COMPRESSORS SHALL BE INSTALLED ABOVE BASE FLOOD ELEVATION.
4. MAIN CIRCUIT BREAKER PANELS SHALL BE LOCATED ABOVE BASE FLOOD ELEVATION.
5. IT IS SUGGESTED THAT YOU CONFER WITH FLORIDA POWER & LIGHT TO LOCATE THE ELECTRIC METER TO COMPLY WITH FEDERAL EMERGENCY MANAGEMENT AGENCY REQUIREMENTS.

NOTE: PRIOR TO INSTALLATION OF ROUGH ELECTRICAL WIRING, CHECK NAME PLATE DATA OF EQUIPMENTS, TO OBTAIN CORRECT WIRE SIZES & OVER CURRENT PROTECTION

200 A. 1PH. 3W. 120/240 — FLUSH MOUNT

EXIST. 200 AMP PANEL ELECTRICAL SCHEDULE

	CCK	DESCRIPTION	TRIP	VOLTS	COND	WIRE	KW	REMARKS
EXIST. LOADS	1–2	EXIST. GEN. LGHTS/RECEPTS.	15	120	ROMEX	14	7.1	(2,374 SQ. FT.) (3W)
	3,5	DRYER	2/25	240		10	5.0	
	4,6	EXIST. TANK LESS W.H.	2/60	240		6	16.0	
	7	REFRIGIRATOR	20	120		12	1.0	
	8	DISHWASHER	20	120		12	1.2	
	9	GARBAGE DISPOSAL	20	120		12	1.5	
	10	WASHING MACHINE	20	120		12	1.5	
	11–13	SPARES						
	12–14	SPARES	TOTAL AT 200 AMP PANEL				33.3	
OTHER EXIST. AND NEW LOADS	16–18B	125 A. 1PH. 3W. 120/240 M.C.B. EXIST. 125 A.MP FOR SUB PANEL			CONDUIT SIZE	3#1		EXIST. INTERIOR MOUNTED
	1B–8B	NEW LIGHTING & RECEPTS.	15	120	1/2"	14	--	SEE ABOVE
	9B–11B	NEW A.H.U. #2	2/60	240		6	10.0	5.2 KW COOLING LOAD NOT COINCIDENT
	10B,12B	NEW C.U. #2	2/40	240	3/4"	8		
	13B,15B	EXT. LIGHTS & RECEPTS.	20	120	ROMEX	12	--	SEE ABOVE
	14B	GFCI BATHROOM OUTLETS	20	120		12	--	SEE ABOVE
	16B,18B	EXIST. SMALL APPLIANCES	20	120		12	3.0	
	17B,19B	EXIST. RANGE	2/50	240		6	12.0	
	20B,21B	SPARES	TOTAL AT 125 AMP PANEL				25.0	
						TOTAL=	58.3	

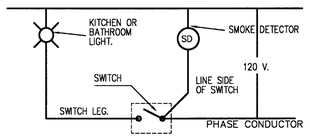

S/D NOTE:
SMOKE DETECTOR SHALL BE HARDWIRED (110 VOLT TYPE) TO A NON-SWITCHABLE KITCHEN OR BATHROOM LIGHTING CIRCUIT, WITH BATTERY BACK-UP AND SHALL NOT BE CONNECTED ONTO THE LOAD SIDE OF GROUND FAULT CIRCUIT INTERRUPTER. ALL SMOKE DETECTORS WITHIN EACH UNIT SHALL BE INTERCONNECTED.

CSD = CARBON MONOXIDE COMBO

CONNECTED LOAD
58,300
-A/C =10,000
48,300

DEMAND CALCULATION

1st 10 KW @	100%	10,000
REMAINDER @	40%	9,320
A/C @	100%	20,000
DEMAND LOAD		39,320 VA

39,320 / 240 = 163.83 AMPS

EXIST. 200 AMP MCB.
& ELECTRICAL PANELS
SUFFICES

ELECTRICAL LEGEND

	APPLIANCE OUTLET		RECESSED LIGHTING
	DUPLEX OUTLET	V	VAPOR PROOF LIGHT
	50 AMP OUTLET		CEILING MOUNT FIXTURE
△	PHONE OUTLET BY OTHERS MAY VARY IN LOCATION		WALL MOUNT FIXTURE
GFI	GROUND FAULT INTERRUPTER	F	UL-RATED FAN BOX/J BOX
WP	WATER PROOF	SD	110 V./BATT.SMOKE DETECTOR
$	SINGLE POLE SWITCH		EXIT LIGHT
3W	3 WAY SWITCH		ELECTRICAL PANEL
	DISCONNECT SWITCH		METER
	EXHAUST OR MOTOR	TV	CABLE/TV BY OTHERS MAY VARY IN LOCATION

R=RELOCATED W/EXIST. CIRCUIT
N=NEW
E=EXIST. TO REMAIN

NOTE: ALL CIRCUITING SHOWN IS PRIMARY FOR LOAD PURPOSES ONLY. ACTUAL CIRCUITING LAYOUT AND LIGHTING FIXTURE LOCATION & TYPES MAY VARY AS PER ELECTRICAL CONTRACTOR
NOTE: SEPARATE ELECTRICAL SUB PERMIT IS REQ'D. UNDER THIS MASTER PERMIT.

NOTE: 90% OF LAMPS MUST HIGH EFFICIENCY AND AT LEAST 45 LUMENS/W. OR NOT LESS THAN 65 LUMUNS/W. AS PER F.B.C. RE 404

NOTE: arc fault circuit interrupter

1. The overcurrent protection of the new circuits shall be arc fault circuit interrupter combination type circuit breakers.

A) Dwelling Units. All 120–volt, single–phase, 15– and 20–ampere branch circuits supplying outlets or devices installed in dwelling unit kitchens, family rooms, dining rooms, living rooms, parlors, libraries, dens, bedrooms, sunrooms, recreation rooms, closets, hallways, laundry areas, or similar rooms or areas shall be protected by any of the means described in 210.12(A)(1) through (6): *NO A.F.C.I. FOR OUTDOORS*

2. All receptacles 15A and 20A, 125V shall be tamper resistant, according to NEC 406.11.

NOTE: ALL OUTDOOR INSTALLATIONS SHALL COMPLY WITH NEC 110.11, 110.12, 110.26, 110.28, & 358.12

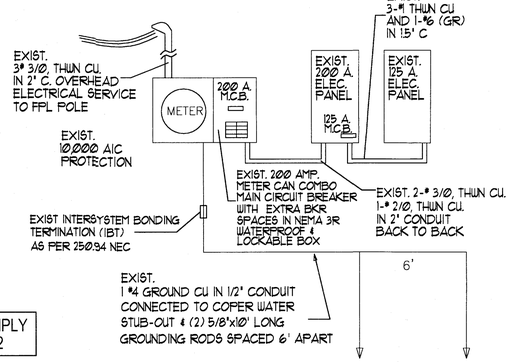

EXIST. RISER DIAGRAM

NOTE CODES IN EFFECT:
FBC 2020, 7th EDITION
ELECTRICAL & NEC 2017

NOTE: ALL SWITCHED LOCATIONS TO HAVE NEUTRAL GROUNDED CIRCUIT CONDUCTORS AS PER 404.2(C) NEC

NOTE: ALL SWITCHES, OUTLETS & LIGHT FIXTURES SHOWN ARE OR MAY VARY IN ACTUAL FIELD CONDITIONS. THIS A DIAGRAM TO SHOW APPROXIMATE LOCATIONS FOR ALL NEW OR REPLACED ELECTRICAL FIXTURES, OUTLETS ETC.

ELECTRICAL SCOPE OF WORK:
REMOVE ANY EXIST. ELECTRICAL IN AREAS BEING DEMOLISHED.
REMOVE & REPLACE ALL ELECTRICAL WIRING IN ALL AREAS.
EXIST. 200 AMP. M.C.B., & 200 & 125 AMP ELECTRICAL PANELS TO REMAIN.
PROVIDE NEW GFCI OUTLETS AT NEW BATH ROOMS AS SHOWN.
PROVIDE ALL NEW LIGHTING,SWITCHES & OUTLETS AT ALL NEW AREAS AS SHOWN.
SEE FLOOR PLAN. PROVIDE NEW SMOKE DETECTORS AT AS SHOWN.
EXIST. UNDERGROUND ELECTRICAL SERVICE TO REMAIN.

NOTE: TRADE CONTRACTOR IS RESPONSIBLE FOR ANY COST EFFECTIVE REVISIONS TO PLANS IF ORIGINAL DESIGN OF APPROVED PLANS ARE NOT FOLLOWED. A DIFFERENT METHOD IN DESIGN MAY BE USED AFTER CONSTRUCTION & PERMIT DOCUMENTS ARE ACTIVE IN FIELD, BUT AGAIN TRADE CONTRACTOR WILL BE RESPONSIBLE FOR ANY INCURRED COSTS DUE TO ANY REQUIRED REVISION WORK ON THE ORIGINAL APPROVED PLANS. ANY AND ALL CHANGES TO PLANS MUST BE APPROVED BY THE ENGINEER OR ARCHITECT OF RECORD & BUILDING DEPT. AND WILL BE BILLED ACCORDINGLY.

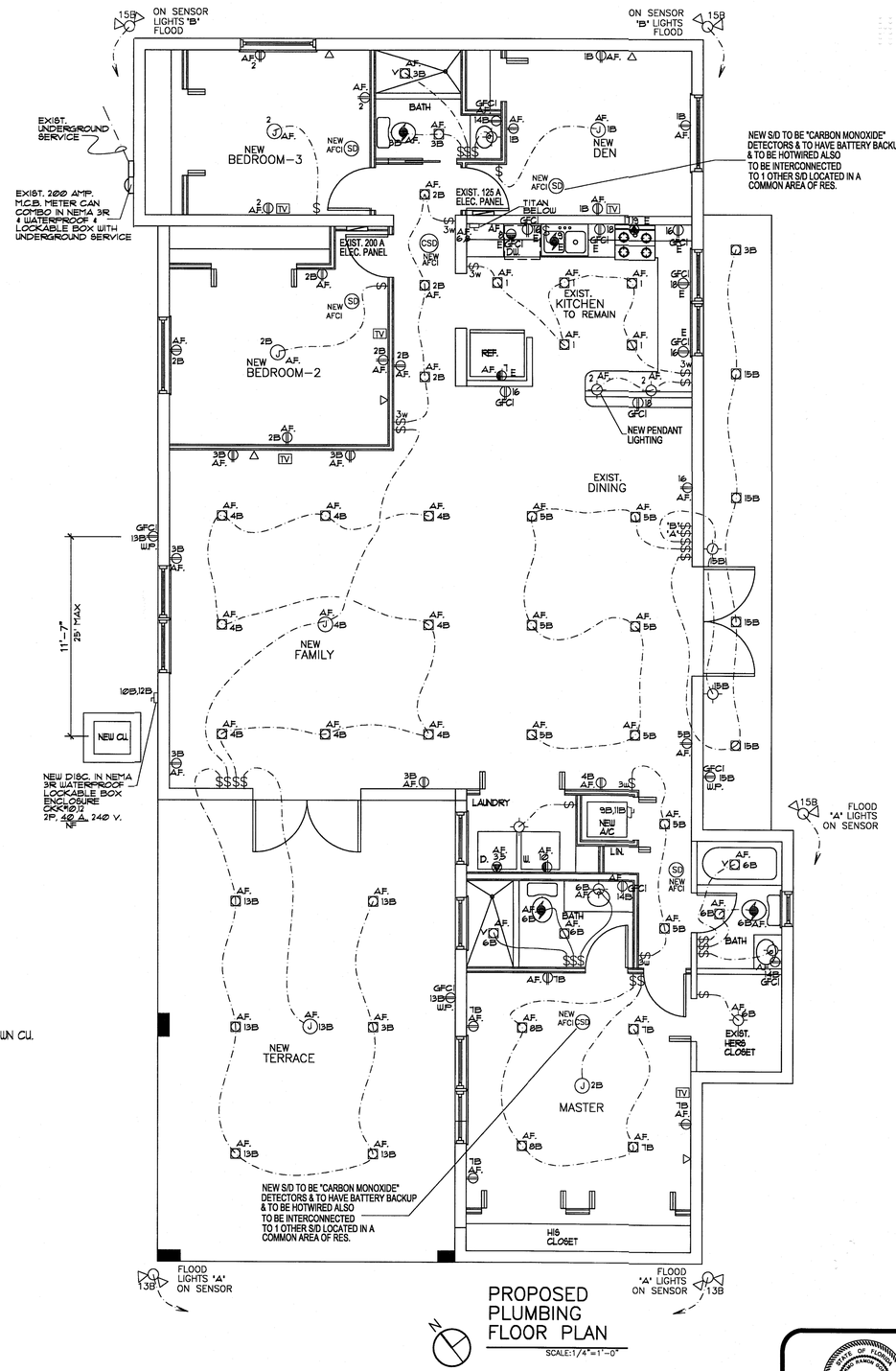

PROPOSED PLUMBING FLOOR PLAN
SCALE:1/4"=1'-0"

CITY OF MIAMI SPRINGS
APPROVED
FOR PERMITTING

ELECTRICAL INSPECTOR

BUILDING INSPECTOR

STATE OF FLORIDA
GUILLERMO RAMON GONZALEZ
AR0013960
Guillermo Ramon Gonzalez
R.A. 13960
STATE OF FLORIDA

NO.	DATE
1	
2	
3	
4	
5	

DESG | DRWN | CHKD | APRV | DATE

PROJECT NAME: ADDITION TO RESIDENCE FOR:
OWNER/PH: AMBAR PREVAL 786-587-7391
ADDRESS:200 N. ESPLANADE DRIVE MIAMI SPRINGS, FLORIDA 33166
PROJECT ADD: SAME

Guillermo Ramon Gonzalez
9000 SW. 168th Avenue Miami Florida 33196 Ph:305-484-8171
Registered Architect #13960 Ph:786-237-5154 (assistant)

101521

E-1

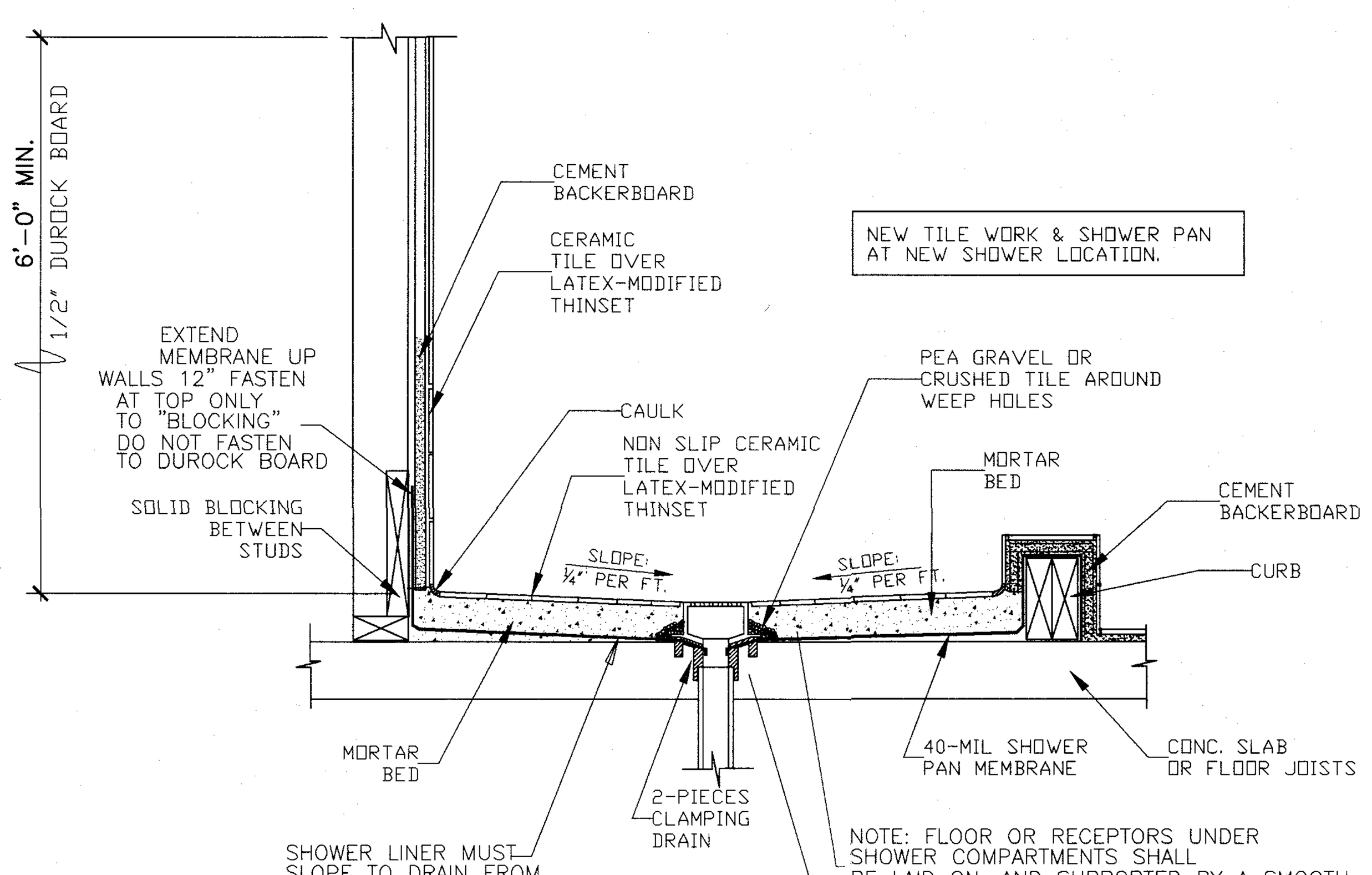

SHOWER PAN DETAIL NTS

NOTE: TITAN N-180 (EXISTING TANK LESS W.H.)

LARGE Whole house capacity- 3bed/2bath
4 GPM
Thermostatically control temp on front cover
60% energy savings vs. conventional electric water heaters
99.5% efficient
10 year warranty on water carrying components- 1 year on rest of unit
Space saver
On demand water control- equals unit longevity and savings
For use with hard, soft, well or city water
Problem free installation
Most efficient and practical product of its kind on the market
Steel outer / copper-brass inner casing (no plastic or pvc parts)
UL approved #499
ANSI-Z 10.03 certified
Dimensions: 10" high x 7" wide x 2 3/4" deep
11.4KW- 54 amps- 1 double pole 60 amp breaker required. 1, 6/2 wire line
Dual heating chambers
Simple instructions for installation ease
Made in the USA

PLUMBING SCOPE OF WORK:

ALL NEW PLUMBING WORK IS AT BOTH NEW BATHROOMS.
PROVIDE 2-NEW BATHS, W/ VANITY & LAV. AND NEW FAUCET &
PROVIDE NEW TOILETS AT BOTH NEW BATHROOM AREA.
PROVIDE NEW SHOWER & SHOWER PAN AT BOTH NEW BATHS.
PROVIDE NEW 1" WATER SERVICE FROM METER.
EXIST. TANKLESS WATER HEATER TO REMAIN.
PROVIDE NEW WATER & DRAIN LINES & WATER PIPING &
PROVIDE NEW WATER DISTRIBUTION LINES AS SHOWN.
EXIST. FRONT BATHROOM TO REMAIN.
NEW W.& D. LAUNDRY ROOM LOCATION SEE PLAN.
EXISTING MAIN DRAIN LINE AS SHOWN TO REMAIN AS IS.
CONNECT NEW 3" SAN. LINE FROM NEW ADDITION TO EXIST.
MAIN HOUSE DRAIN LINE AT FRONT OF RESIDENCE. SEE SP-1 & P-1.

PLUMBING NOTES:

1. ALL PLUMBING SHALL BE DONE IN ACCORDANCE WITH (PLUMBING) OF THE "F.B.C." 2020-7th EDITION AND ALL OTHER PERTAINING CODES AND ORDINANCES HAVING JURISDICTION.
2. PLUMBING CONTRACTOR SHALL PAY ALL FEES, INSPECTIONS AND CONNECTION CHARGES REQUIRED.
3. PLUMBING CONTRACTOR SHALL FURNISH AND INSTALL AIR CONDITIONING CONDENSE DRAIN AND TRAP. SEE AIR CONDITIONING PLANS FOR LOCATION OF UNITS AND DRAINS.
4. PLUMBING CONTRACTOR SHALL VERIFY ALL SPACE CONDITIONS AND DIMENSIONS AT JOB SITE PRIOR TO FABRICATION AND INSTALLATION OF MATERIALS AND EQUIPMENT.
5. COORDINATE WORK WITH OTHER TRADES.
6. SUBMIT SHOP DRAWINGS TO ENGINEER FOR APPROVAL OF ALL EQUIPMENT, MATERIALS AND LAYOUTS PRIOR TO INSTALLATION.
7. FURNISH AND INSTALL BATHROOM FIXTURES AS SPECIFIED (BY ENGINEER).
8. PLUMBING CONTRACTOR SHALL GUARANTEE ALL WORK FREE OF DEFECTS IN MATERIAL AND WORKMANSHIP FOR A PERIOD OF ONE YEAR FROM DATE OF ACCEPTANCE.
9. EACH BATHROOM GROUP SHALL BE PROVIDED WITH AIR CHAMBERS AS PER FLO-RIDA BUILDING CODE.
10. PROVIDE SHUTOFF VALVE FOR EACH FIXTURE.
11. WHEREVER DISSIMILAR METALS ARE TO BE JOINED, A DI- ELECTRIC FITTING SHALL BE PROVIDED TO CONNECT BOTH TYPES OF PIPES.
12. PIPES.
    A. COLD WATER PIPING DOWNSTREAM OF WATER METER SHALL BE TYPE "L" COPPER BELOW GROUND AND TYPE "M" COPPER ABOVE GROUND.
    B. SANITARY WASTE AND VENT 4" AND SMALLER SHALL BE PVC SOIL PIPE.
    C. CONDENSE DRAIN PIPE SHALL BE SCHEDULE 40, PVC PIPE AND FITTINGS.
    D. STORM LINES SHALL BE SAME AS FOR SANITARY SYSTEM.
13. THERE SHALL BE NO JOINTS IN WATER LINES BELOW SLAB.
14. PROVIDE ANTI-SCALD DIVERTS @ ALL SHOWERS AND TUBS.
15. WATER SERVICE LINE TO STRUCTURE MAY BE CPVC MATERIAL UP TO CONTROL VALVE. AFTER THAT TO WATER HEATER SOURCE AND OTHER DISTRIBUTION LINE TO BE COPPER. AS PER ASTM D 2846; ASTM F 441; ASTM F 442; CSA B 137.6

16. FBC P2903.2 MAXIMUM FLOW OF WATER CONPSUMPTION. AS PER MIAMI DADE COUNTY ORDINANCE SEC. 8-31 PLUMBING FIXTURES SHALL MEET THE LOCAL WATER FLOW RESTRICTIONS ADOPTED BY MIAMI DADE COUNTYWATER AND SEWER (WATER CLOSET 1.28gpm, LAV. 1.5gpm, SHOWER HEADS 1.5gpm AND KITCHEN FAUCETS 1.5 gpm.

17. FBC P2903.5 WATER HAMMER. THE FLOW VELOCITY OF THE WATER DISTRIBUTIONSYSTEM SHALL BE CONTROLLED TO REDUCE THE POSSIBILTY OF WATER HAMMER. A WATER HAMMER ARRESTOR SHALL BE INSTALLED WHERE QUICK-CLOSING VALVES ARE USED. WATER HAMMER ARRESTORS SHALL BE INSTALLED IN ACCORDANCE WITH MANUFACTURERS SPECIFICATIONS. WATER HAMMER ARRESTORS SHALL CONFORM TO ASSE 1010

BATHTUBS AND SHOWER FLOORS AND WALLS ABOVE BATHTUBS WITH INSTALLED SHOWER HEADS AND IN SHOWER COMPARTMENTS SHALL BE FINISHED WITH A NONABSORBENT SURFACE. SUCH WALL SURFACES SHALL EXTEND TO A HEIGHT OF NOT LESS THAN 6' ABOVE THE FLOOR. AS PER FBC R307.
FIBER CEMENT, FIBER-MAT REINFORCED CEMENT GYPSUM BACKERS INSTALLED IN ACCORDANCE WITH MANUFACTURER RECOMMENDATIONS SHALL BE USED AS BACKERS FOR ALL WALL TILE IN TUB AND SHOWER AREA SAND WALL PANELS IN SHOWER AREAS AS PER FBC R702.4.2

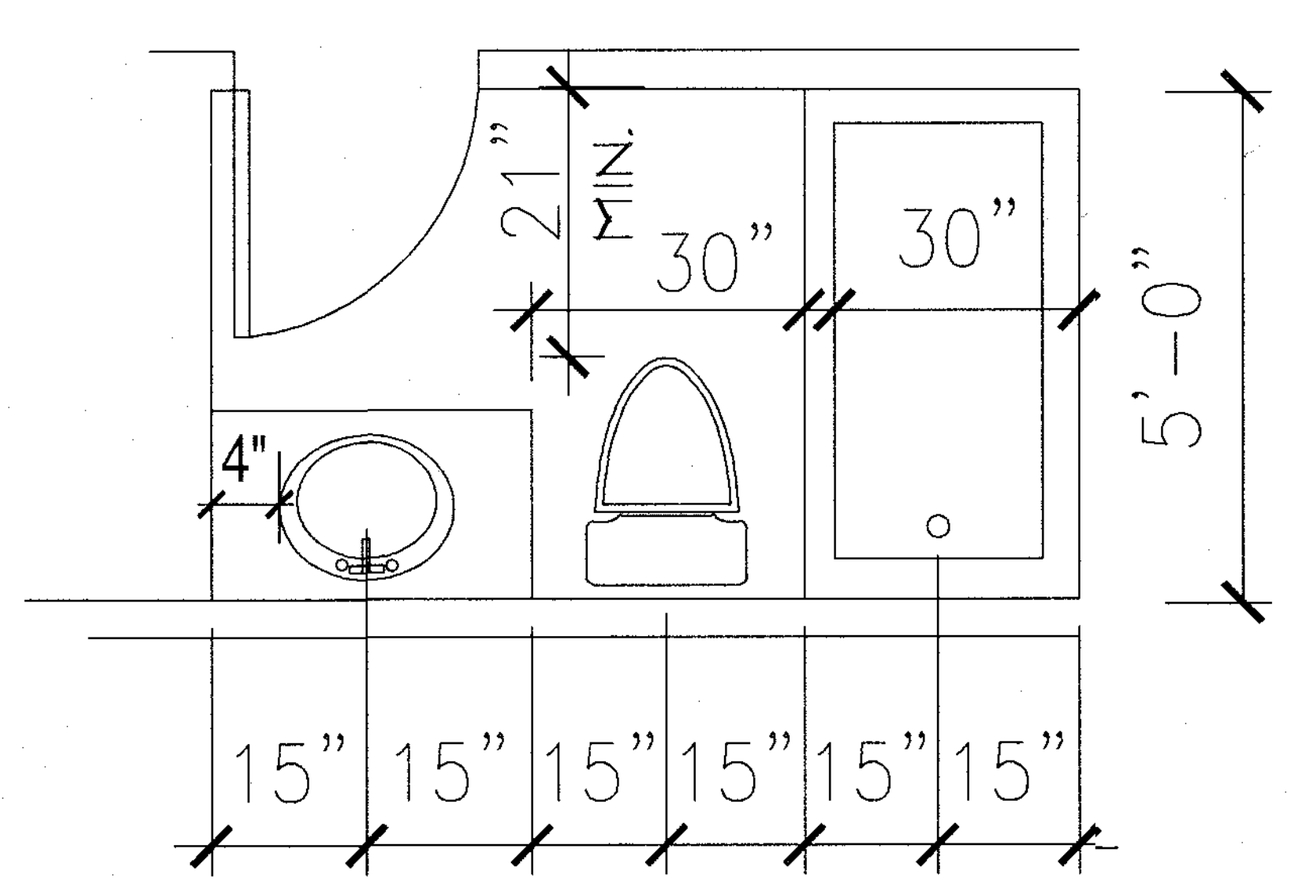

FOR REFERENCE: MIN. FIXTURE CLEARANCE DETAIL
N.T.S.

TABLE 604.4
MAXIMUM FLOW RATES AND CONSUMPTION FOR PLUMBING FIXTURES, FIXTURE FITTINGS AND APPLIANCES

PLUMBING FIXTURE OR FIXTURE FITTING	MAXIMUM FLOW RATE (b)
Lavatory, private	1.5 gpm at 60 psi
Lavatory, public, (metering)	0.25 gallon per metering cycle
Shower head (a)	1.5 gpm at 60 psi
Sink faucet	1.5 gpm at 60 psi
Urinal	>>Waterless or 0.5 gallon flushing cycle
Water Closet	1.28 gallons per flushing cycle
Dishwasher (residential)	6.5 gallons per cycle or less (Energy Star/Water Sense Certified) ©
Dishwasher (commercial)	Less than 1.2 gallons per rack for fill and dump machines and less Than 0.9 gallons per rack for all other types of machines.
Dishwasher (under the counter machines)	1.0 gallon or less per rack for high-temperature machines and 1.7 gallons per rack for low-temperature machines
Washing machine	Water factor of 8 or lower (Energy Star / Water Sense Certified) ©

For SI:
1 gallon = 3.785 L
1 gallon per minute = 3.785 L/m
1 pound per square inch = 6.895 kPa.
(a) A hand-held shower spray is a shower head.
(b) Consumption tolerances shall be determined from referenced standards.
(c) Water factor in gallons per cycle per cubic foot.

(B)

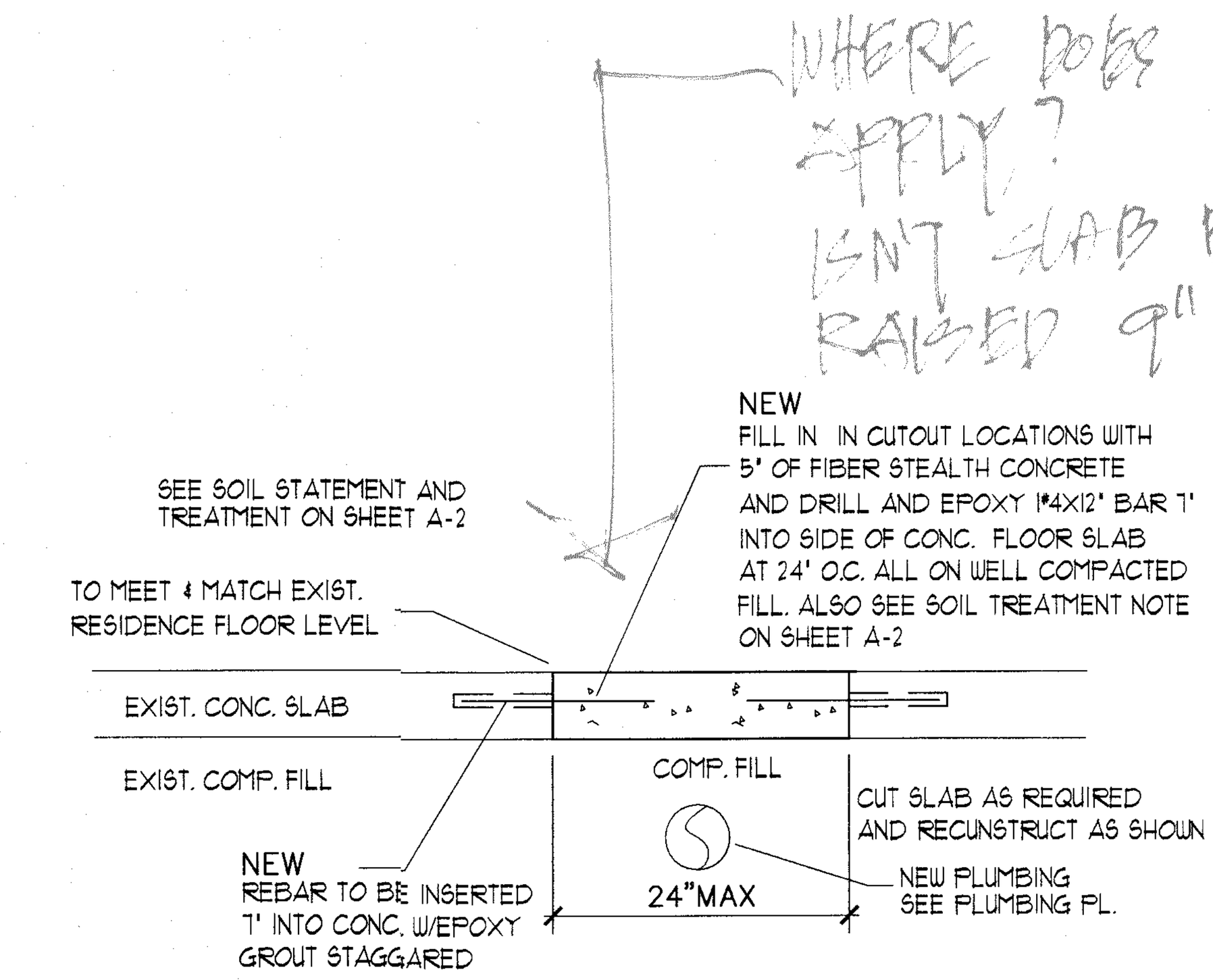

(B) SLAB CONNECTION DETAIL SCALE:1/2"=1'-0"

NOTE: TRADE CONTRACTOR IS RESPONSIBLE FOR ANY COST EFFECTIVE REVISIONS TO PLANS IF ORIGINAL DESIGN OF APPROVED PLANS ARE NOT FOLLOWED. A DIFFERENT METHOD IN DESIGN MAY BE USED AFTER CONSTRUCTION & PERMIT DOCUMENTS ARE ACTIVE IN FIELD, BUT AGAIN TRADE CONTRACTOR WILL BE RESPONSIBLE FOR ANY INCURRED COSTS DUE TO ANY REQUIRED REVISION WORK ON THE ORIGINAL APPROVED PLANS. ANY AND ALL CHANGES TO PLANS MUST BE APPROVED BY THE ENGINEER OR ARCHITECT OF RECORD & BUILDING DEPT. AND WILL BE BILLED ACCORDINGLY.

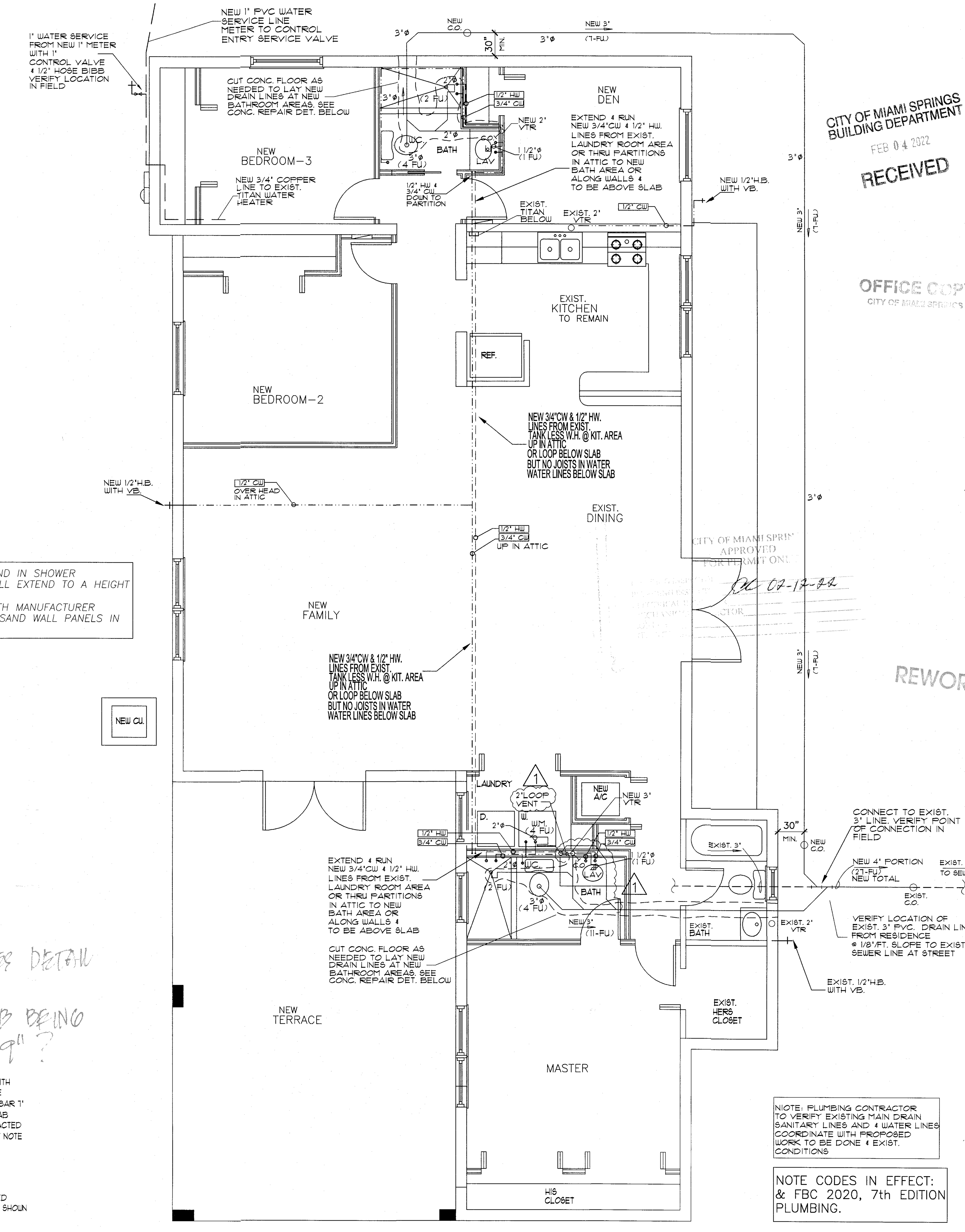

NIOTE: PLUMBING CONTRACTOR TO VERIFY EXISTING MAIN DRAIN SANITARY LINES AND & WATER LINES COORDINATE WITH PROPOSED WORK TO BE DONE & EXIST. CONDITIONS

NOTE CODES IN EFFECT: & FBC 2020, 7th EDITION PLUMBING.

PROPOSED PLUMBING FLOOR PLAN
SCALE:1/4"=1'-0"

CITY OF MIAMI SPRINGS BUILDING DEPARTMENT
FEB 04 2022
RECEIVED

OFFICE COPY
CITY OF MIAMI SPRINGS

CITY OF MIAMI SPRINGS APPROVED FOR PERMIT ONLY
07-17-22

REWORK

NO.	DATE
1	2-1-22 REVISED LAUNDRY WET VENT
2	.
3	.
4	.

DESG . DRWN . CHKD . APRV . DATE .

PROJECT NAME: ADDITION TO RESIDENCE FOR:
OWNER/PH: AMBAR PREVAL 786-587-7391
ADDRESS:200 N. ESPLANADE DRIVE MIAMI SPRINGS, FLORIDA 33166
PROJECT ADD: SAME

Guillermo Ramon Gonzalez
9000 SW. 168th Avenue Miami Florida 33196 Ph:305-484-8171
Registered Architect #13960 Ph:786-237-5154 (assistant)

STATE OF FLORIDA GUILLERMO RAMON GONZALEZ AR0013960 REGISTERED ARCHITECT
Guillermo Ramon Gonzalez
R.A. 13960
STATE OF FLORIDA

101521

P-1

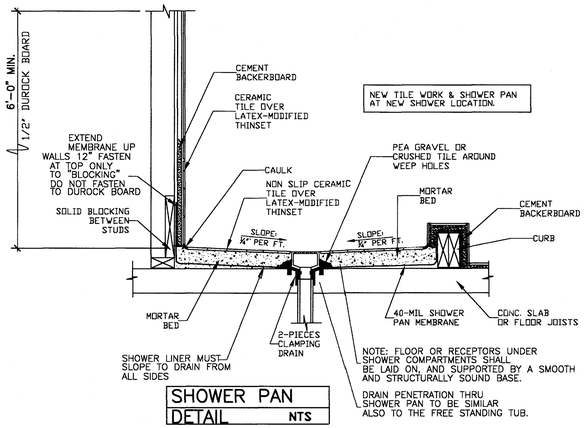

SHOWER PAN DETAIL NTS

NOTE: TITAN N-180 (EXISTING TANK LESS W.H.)

LARGE Whole house capacity- 3bed/2bath
4 GPM
Thermostatically control temp on front cover
60% energy savings vs. conventional electric water heaters
99.5% efficient
10 year warranty on water carrying components- 1 year on rest of unit
Space saver
On demand water control- equals unit longevity and savings
For use with hard, soft, well or city water
Problem free installation
Most efficient and practical product of its kind on the market
Steel outer / copper-brass inner casing (no plastic or pvc parts)
UL approved #499
ANSI-Z 10.03 certified
Dimensions: 10" high x 7" wide x 2 3/4" deep
11.4KW- 54 amps- 1 double pole 60 amp breaker required. 1, 6/2 wire line
Dual heating chambers
Simple instructions for installation ease
Made in the USA

PLUMBING SCOPE OF WORK:

ALL NEW PLUMBING WORK IS AT BOTH NEW BATHROOMS.
PROVIDE 2-NEW BATHS, W/ VANITY & LAV. AND NEW FAUCET &
PROVIDE NEW TOILETS AT BOTH NEW BATHROOM AREA.
PROVIDE NEW SHOWER & SHOWER PAN AT BOTH NEW BATHS.
PROVIDE NEW 1" WATER SERVICE FROM METER.
EXIST. TANKLESS WATER HEATER TO REMAIN.
PROVIDE NEW WATER & DRAIN LINES & WATER PIPING &
PROVIDE NEW WATER DISTRIBUTION LINES AS SHOWN.
EXIST. FRONT BATHROOM TO REMAIN.
NEW W & D LAUNDRY ROOM LOCATION SEE PLAN.
EXISTING MAIN DRAIN LINE AS SHOWN TO REMAIN AS IS.
CONNECT NEW 3" SAN. LINE FROM NEW ADDITION TO EXIST.
MAIN HOUSE DRAIN LINE AT FRONT OF RESIDENCE. SEE SP-1 & P-1.

BATHTUBS AND SHOWER FLOORS AND WALLS ABOVE BATHTUBS WITH INSTALLED SHOWER HEADS AND IN SHOWER COMPARTMENTS SHALL BE FINISHED WITH A NONABSORBENT SURFACE. SUCH WALL SURFACES SHALL EXTEND TO A HEIGHT OF NOT LESS THAN 6' ABOVE THE FLOOR. AS PER FBC R307.
FIBER CEMENT, FIBER-MAT REINFORCED CEMENT GYPSUM BACKERS INSTALLED IN ACCORDANCE WITH MANUFACTURER RECOMMENDATIONS SHALL BE USED AS BACKERS FOR ALL WALL TILE IN TUB AND SHOWER AREA SAND WALL PANELS IN SHOWER AREAS AS PER FBC R702.4.2

PLUMBING NOTES:

1. ALL PLUMBING SHALL BE DONE IN ACCORDANCE WITH (PLUMBING) OF THE "F.B.C." 2020-7th EDITION AND ALL OTHER PERTAINING CODES AND ORDINANCES HAVING JURISDICTION.
2. PLUMBING CONTRACTOR SHALL PAY ALL FEES, INSPECTIONS AND CONNECTION CHARGES REQUIRED.
3. PLUMBING CONTRACTOR SHALL FURNISH AND INSTALL AIR CONDITIONING CONDENSE DRAIN AND TRAP. SEE AIR CONDITIONING PLANS FOR LOCATION OF UNITS AND DRAINS.
4. PLUMBING CONTRACTOR SHALL VERIFY ALL SPACE CONDITIONS AND DIMENSIONS AT JOB SITE PRIOR TO FABRICATION AND INSTALLATION OF MATERIALS AND EQUIPMENT.
5. COORDINATE WORK WITH OTHER TRADES.
6. SUBMIT SHOP DRAWINGS TO ENGINEER FOR APPROVAL OF ALL EQUIPMENT, MATERIALS AND LAYOUTS PRIOR TO INSTALLATION.
7. FURNISH AND INSTALL BATHROOM FIXTURES AS SPECIFIED (BY ENGINEER).
8. PLUMBING CONTRACTOR SHALL GUARANTEE ALL WORK FREE OF DEFECTS IN MATERIAL AND WORKMANSHIP FOR A PERIOD OF ONE YEAR FROM DATE OF ACCEPTANCE.
9. EACH BATHROOM GROUP SHALL BE PROVIDED WITH AIR CHAMBERS AS PER FLO-RIDA BUILDING CODE.
10. PROVIDE SHUTOFF VALVE FOR EACH FIXTURE.
11. WHEREVER DISSIMILAR METALS ARE TO BE JOINED, A DI- ELECTRIC FITTING SHALL BE PROVIDED TO CONNECT BOTH TYPES OF PIPES.
12. PIPES.
    A. COLD WATER PIPING DOWNSTREAM OF WATER METER SHALL BE TYPE "L" COPPER BELOW GROUND AND TYPE "M" COPPER ABOVE GROUND.
    B. SANITARY WASTE AND VENT 4" AND SMALLER SHALL BE PVC SOIL PIPE.
    C. CONDENSE DRAIN PIPE SHALL BE SCHEDULE 40, PVC PIPE AND FITTINGS.
    D. STORM LINES SHALL BE SAME AS FOR SANITARY SYSTEM.
13. THERE SHALL BE NO JOINTS IN WATER LINES BELOW SLAB.
14. PROVIDE ANTI-SCALD DIVERTS @ ALL SHOWERS AND TUBS.
15. WATER SERVICE LINE TO STRUCTURE MAY BE CPVC MATERIAL UP TO CONTROL VALVE. AFTER THAT TO WATER HEATER SOURCE AND OTHER DISTRIBUTION LINE TO BE COPPER. AS PER ASTM D 2846; ASTM F 441; ASTM F 442; CSA B 137.6

16. FBC P2903.2 MAXIMUM FLOW OF WATER CONPSUMPTION. AS PER MIAMI DADE COUNTY ORDINANCE SEC. 8-31 PLUMBING FIXTURES SHALL MEET THE LOCAL WATER FLOW RESTRICTIONS ADOPTED BY MIAMI DADE COUNTYWATER AND SEWER (WATER CLOSET 1.28gpm, LAV. 1.5gpm, SHOWER HEADS 1.5gpm AND KITCHEN FAUCETS 1.5 gpm.

17. FBC P2903.5 WATER HAMMER. THE FLOW VELOCITY OF THE WATER DISTRIBUTIONSYSTEM SHALL BE CONTROLLED TO REDUCE THE POSSIBILTY OF WATER HAMMER. A WATER HAMMER ARRESTOR SHALL BE INSTALLED WHERE QUICK-CLOSING VALVES ARE USED. WATER HAMMER ARRESTORS SHALL BE INSTALLED IN ACCORDANCE WITH MANUFACTURERS SPECIFICATIONS. WATER HAMMER ARRESTORS SHALL CONFORM TO ASSE 1010

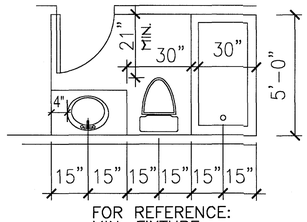

FOR REFERENCE:
MIN. FIXTURE
CLEARANCE DETAIL
N.T.S.

TABLE 604.4
MAXIMUM FLOW RATES AND CONSUMPTION FOR
PLUMBING FIXTURES, FIXTURE FITTINGS AND APPLIANCES

PLUMBING FIXTURE OR FIXTURE FITTING	MAXIMUM FLOW RATE (b)
Lavatory, private	1.5 gpm at 60 psi
Lavatory, public, (metering)	0.25 gallon per metering cycle
Shower head (a)	1.5 gpm at 60 psi
Sink faucet	1.5 gpm at 60 psi
Urinal	>>Waterless or 0.5 gallon flushing cycle
Water Closet	1.28 gallons per flushing cycle
Dishwasher (residential)	6.5 gallons per cycle or less (Energy Star/Water Sense Certified) ©
Dishwasher (commercial)	Less than 1.2 gallons per rack for fill and dump machines and less Than 0.9 gallons per rack for all other types of machines.
Dishwasher (under the counter machines)	1.0 gallon or less per rack for high-temperature machines and 1.7 gallons per rack for low-temperature machines
Washing machine	Water factor of 8 or lower (Energy Star / Water Sense Certified) ©

For SI:

1 gallon = 3.785 L
1 gallon per minute = 3.785 L/m
1 pound per square inch = 6.895 kPa.

(a) A hand-held shower spray is a shower head.
(b) Consumption tolerances shall be determined from referenced standards.
(c) Water factor in gallons per cycle per cubic foot.

(B)

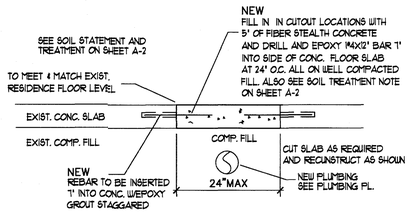

(B) SLAB CONNECTION DETAIL SCALE:1/2"=1'-0"

NEW C.L.

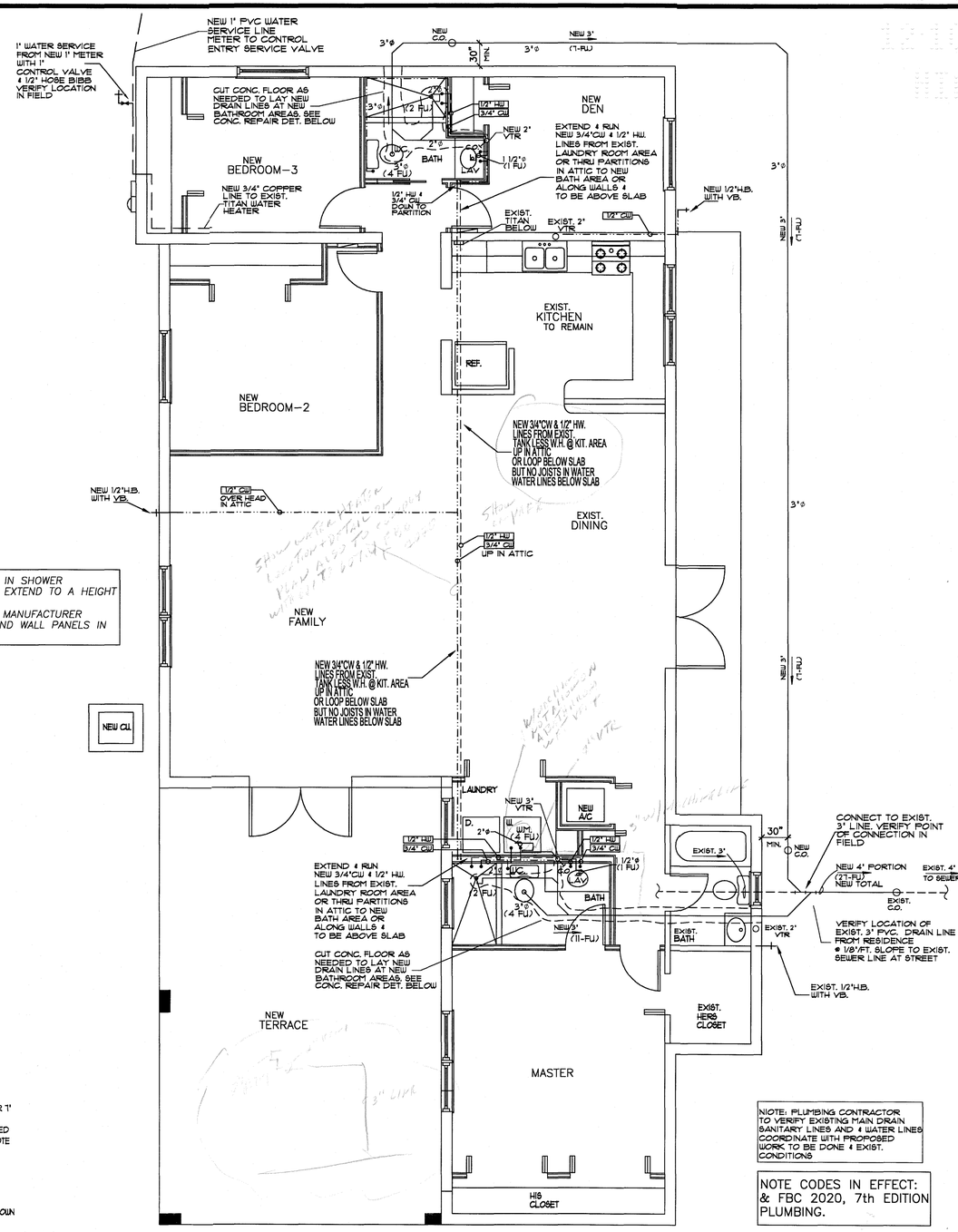

PROPOSED PLUMBING FLOOR PLAN
SCALE:1/4"=1'-0"

NOTE: TRADE CONTRACTOR IS RESPONSIBLE FOR ANY COST EFFECTIVE REVISIONS TO PLANS IF ORIGINAL DESIGN OF APPROVED PLANS ARE NOT FOLLOWED. A DIFFERENT METHOD IN DESIGN MAY BE USED AFTER CONSTRUCTION & PERMIT DOCUMENTS ARE ACTIVE IN FIELD, BUT AGAIN TRADE CONTRACTOR WILL BE RESPONSIBLE FOR ANY INCURRED COSTS DUE TO ANY REQUIRED REVISION WORK ON THE ORIGINAL APPROVED PLANS. ANY AND ALL CHANGES TO PLANS MUST BE APPROVED BY THE ENGINEER OR ARCHITECT OF RECORD & BUILDING DEPT. AND WILL BE BILLED ACCORDINGLY.

CITY OF MIAMI SPRINGS APPROVED FOR PERMIT ONLY VOID

STATE OF FLORIDA GUILLERMO RAMON GONZALEZ LICENSE NO. AR0013960 REGISTERED ARCHITECT
Guillermo Ramon Gonzalez
R.A. 13960
STATE OF FLORIDA

NO.	DATE
1	
2	
3	
4	

DESIG	DRWN	CHKD	APPV	DATE

PROJECT NAME: ADDITION TO RESIDENCE FOR:
OWNER/PH: AMBAR PREVAL 786-587-7391
ADDRESS: 200 N. ESPLANADE DRIVE MIAMI SPRINGS, FLORIDA 33166
PROJECT ADD: SAME

Guillermo Ramon Gonzalez
9000 SW. 168th Avenue Miami Florida 33196 Ph:305-484-8171
Registered Architect #13960 Ph:786-237-5154 (assistant)

101521

P-1

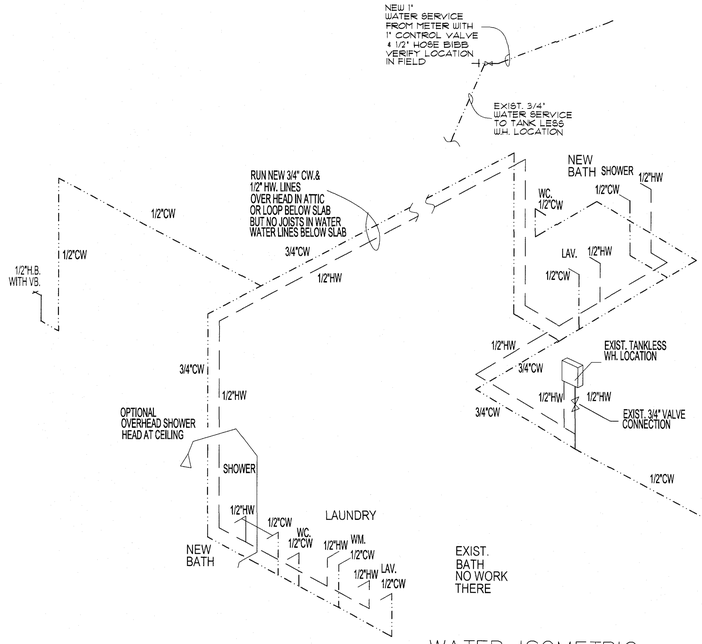

WATER ISOMETRIC N.T.S.

CITY OF MIAMI SPRINGS
BUILDING DEPARTMENT
FEB 04 2022
RECEIVED

OFFICE COPY
CITY OF MIAMI SPRINGS

REWORK

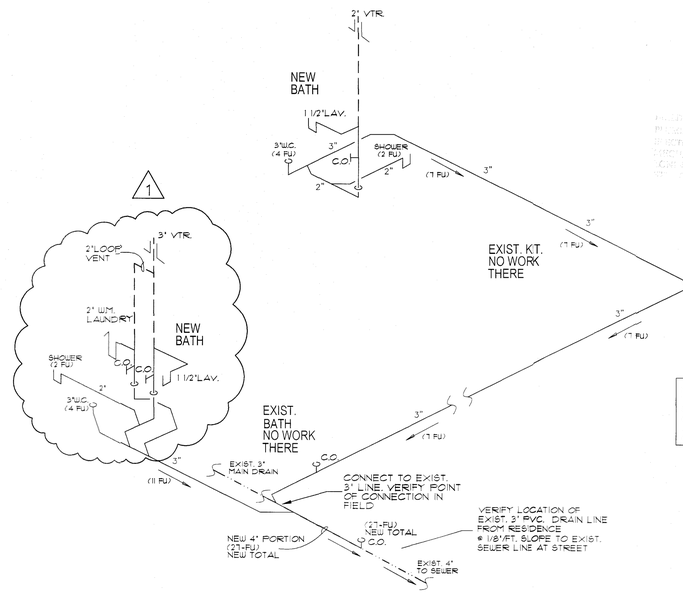

SEWER ISOMETRIC N.T.S.

NOTE: ALL WATER LINES TO BE IN ABOVE SLAB AND IN PARTITIONS NO WATER LINES BELOW SLAB

NOTE: CPVC MAY BE USED FOR WATER SERVICE LINES IN LIEU OF COPPER. CPVC IS NOT TO BE USED FOR DISTRIBUTION LINES.

NOTE: PLUMBING CONTRACTOR TO VERIFY EXISTING DRAIN LINES SANITARY LINE, FOR NEW TO EXIST. TIE IN LOCATIONS AT BOTH AREAS INVOLVING THE PROPOSED PLUMBING WORK

NOTE: ALL COLD & HOT WATER LINES TO BE 1/2" AT ALL ALL FIXTURE BRANCHES (TYP.)

PROVIDE FIXTURE CONTROL VALVE @ ALL FIXTURES AS PER 'F.B.C.' PLUMBING

NOTE:

ANY 2" OR LESS SAN. OR CONDENSATE LINE TO BE AT 1/4" PER FT. SLOPE.

ANY 3" OR GREATER SAN. LINE TO BE AT 1/8" PER FT. SLOPE.

DENOTE SLOPE/FLOW

NOTE: PLUMBING CONTRACTOR TO VERIFY EXISTING MAIN DRAIN SANITARY LINES AND COORDINATE WITH PROPOSED WORK TO BE DONE & EXIST. CONDITIONS

BATHTUBS AND SHOWER FLOORS AND WALLS ABOVE BATHTUBS WITH INSTALLED SHOWER HEADS AND IN SHOWER COMPARTMENTS SHALL BE FINISHED WITH A NONABSORBENT SURFACE. SUCH WALL SURFACES SHALL EXTEND TO A HEIGHT OF NOT LESS THAN 6' ABOVE THE FLOOR, AS PER FBC R307.
FIBER CEMENT, FIBER-MAT REINFORCED CEMENT GYPSUM BACKERS INSTALLED IN ACCORDANCE WITH MANUFACTURER RECOMMENDATIONS SHALL BE USED AS BACKERS FOR ALL WALL TILE IN TUB AND SHOWER AREA SAND WALL PANELS IN SHOWER AREAS AS PER FBC R702.4.2

CITY OF MIAMI SPRINGS
APPROVED
FOR PERMIT ONLY
BUILDING INSPECTOR
ELECTRICAL INSPECTOR
PLUMBING INSPECTOR
ZONING INSPECTOR
FIRE INSPECTOR
DATE 02-12-22

NO.	DATE
1	2-1-22 REVISED LAUNDRY JET VENT
2	.
3	.
4	.

DES: . DRWN: . CHKD: . APRV: . DATE: .

PROJECT NAME: ADDITION TO RESIDENCE FOR:
OWNER/PH: AMBAR PREVAL 786-587-7391
ADDRESS:200 N. ESPLANADE DRIVE, MIAMI SPRINGS, FLORIDA 33166
PROJECT ADD: SAME

Guillermo Ramon Gonzalez
9000 SW. 168th Avenue Miami Florida 33196 Ph:305-484-8171
Registered Architect #13960 Ph:786-237-5154 (assistant)

STATE OF FLORIDA
GUILLERMO RAMON GONZALEZ
LICENSE NUMBER 13960
REGISTERED ARCHITECT

Guillermo Ramon Gonzalez
R.A. 13960
STATE OF FLORIDA

101521

P-2

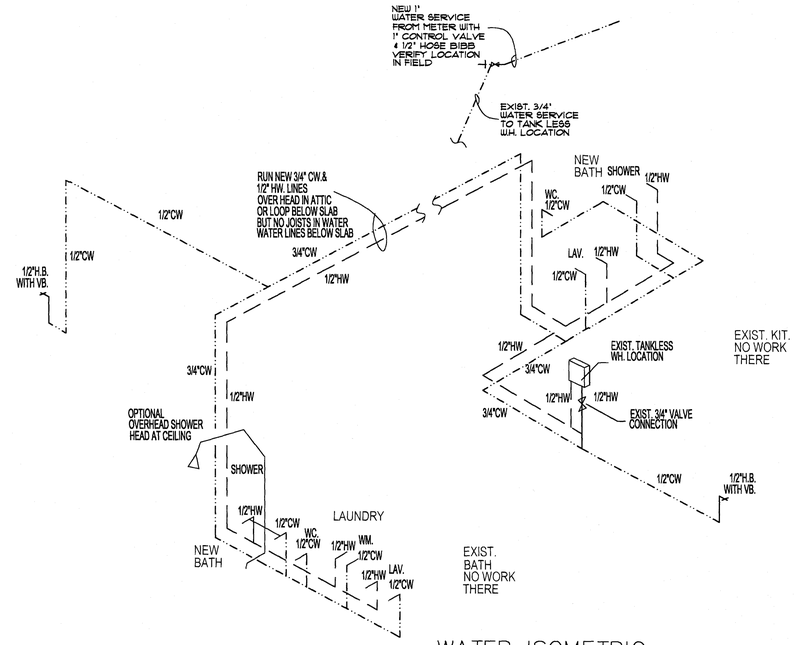

WATER ISOMETRIC N.T.S.

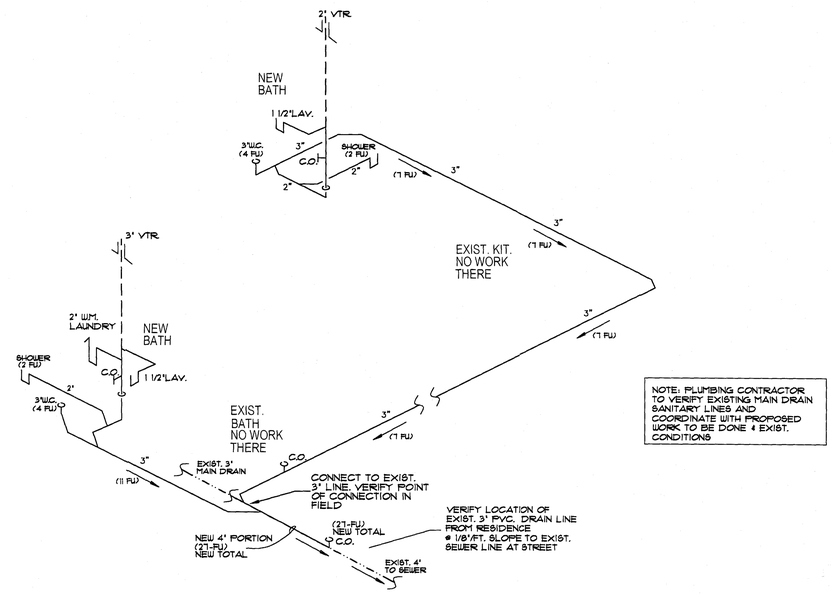

SEWER ISOMETRIC N.T.S.

NOTE: PLUMBING CONTRACTOR TO VERIFY EXISTING MAIN DRAIN SANITARY LINES AND COORDINATE WITH PROPOSED WORK TO BE DONE & EXIST. CONDITIONS

NOTE: CPVC MAY BE USED FOR WATER SERVICE LINES IN LIEU OF COPPER. CPVC IS NOT TO BE USED FOR DISTRIBUTION LINES.

NOTE: PLUMBING CONTRACTOR TO VERIFY EXISTING DRAIN LINES SANITARY LINE, FOR NEW TO EXIST. TIE IN LOCATIONS AT BOTH AREAS INVOLVING THE PROPOSED PLUMBING WORK

NOTE: ALL COLD & HOT WATER LINES TO BE 1/2" AT ALL ALL FIXTURE BRANCHES (TYP)

PROVIDE FIXTURE CONTROL VALVE @ ALL FIXTURES AS PER "F.B.C." PLUMBING

NOTE: ALL WATER LINES TO BE IN ABOVE SLAB AND IN PARTITIONS NO WATER LINES BELOW SLAB

NOTE:

ANY 2" OR LESS SAN. OR CONDENSATE LINE TO BE AT 1/4" PER FT. SLOPE.

ANY 3" OR GREATER SAN. LINE TO BE AT 1/8" PER FT. SLOPE.

→ DENOTE SLOPE/FLOW

BATHTUBS AND SHOWER FLOORS AND WALLS ABOVE BATHTUBS WITH INSTALLED SHOWER HEADS AND IN SHOWER COMPARTMENTS SHALL BE FINISHED WITH A NONABSORBENT SURFACE. SUCH WALL SURFACES SHALL EXTEND TO A HEIGHT OF NOT LESS THAN 6' ABOVE THE FLOOR. AS PER FBC R307.
FIBER CEMENT, FIBER-MAT REINFORCED CEMENT GYPSUM BACKERS INSTALLED IN ACCORDANCE WITH MANUFACTURER RECOMMENDATIONS SHALL BE USED AS BACKERS FOR ALL WALL TILE IN TUB AND SHOWER AREA SAND WALL PANELS IN SHOWER AREAS AS PER FBC R702.4.2

CITY OF MIAMI SPRINGS APPROVED FOR PERMIT ONLY

STATE OF FLORIDA GUILLERMO RAMON GONZALEZ AR0013960 Seal REGISTERED ARCHITECT

Guillermo Ramon Gonzalez
R.A. 13960
STATE OF FLORIDA

NO.	DATE
1	
2	
3	
4	

DESG
DRWN
CHKD
APRV
DATE

PROJECT NAME: ADDITION TO RESIDENCE FOR:
OWNER/PH: AMBAR PREVAL 786-587-7391
ADDRESS:200 N. ESPLANADE DRIVE MIAMI SPRINGS, FLORIDA 33166
PROJECT ADD: SAME

Guillermo Ramon Gonzalez
9000 SW. 168th Avenue Miami Florida 33196 Ph:305-484-8171
Registered Architect #13960 Ph:786-237-5154 (assistant)

101521

P-2

M I A M I
201 WESTWARD DRIVE
MIAMI SPRINGS FLORIDA 331
(305) 805-5030

E L E C T R I C A L P E R

Application Number 20-00000130
Property Address . . . . . 200 ESPLANAD
FOLIO NUMBER: 05-3118-016-
Application type description ELECTRICAL W
Application valuation 2000

Owner

AILLETTE A DIAZ
200 ESPLANADE DRIVE
MIAMI SPRINGS FL 33166

Contra

ALEX F
2245 W
HIALEA
(305)

--- Structure Information 000 000 UPGRADE ELECT
Other struct info . . . . . COMMERCIAL ?
RESIDENTIAL ?
MASTER ?
SUBSIDIARY ?

Permit . . . . . ELECTRICAL PERMIT
Additional desc . . UPGRADE ELECTRICAL SERVI
Permit pin number . 415463
Permit Fee 125.00
Issue Date 11/08/19
Expiration Date . . 5/06/20

Valua

Qty	Unit Charge	Per
	BASE FEE	

Fee summary	Charged	Paid	C
Permit Fee Total	125.00	125.00	
Grand Total	125.00	125.00	

Inspection results, plan tracking & MANY FOR
ON OUR WEB SITE AT http://www.miamisprings-f
applications and fee schedule are also availa
Go to: http://www.miamisprings-fl.gov
NEXT DAY INSPECTION REQUESTS MUST BE IN BEFO

MIAMI SPRINGS
BUILDING DEPARTMENT
201 Westward Drive, Second Floor
Miami Springs, FL 33166
Office: 305-805-5030 Fax: 305-805-5036
www.miamisprings-fl.gov

MIAMI SPRINGS
At the Heart of It All!

Date:

RECEIVED
NOV 07 2019
BY: .....

JOB ADDRESS 200 esplanade

PERMIT APPLICATION

☑ Master Permit ☐ Sub-Permit Clerk OB

MASTER PERMIT NUMBER 20-130

1. Owner Information
Owner Aillette Rodriguez
Address 200 Esplanade
City _____ ST _____ Zip _____
Driver License No. /I.D. _____
Phone No. 305-8888830

2. Contractor Information
Company Name Alex Electric Service
Qualifier Name Alex Varr
Address 2245 West 10 CT
City Hialeah ST FL Zip 33010
Lic. No. EC13001444 Phone No. 888 8830

3. Permit Type (Choose only One)
☐ Building
☒ Electrical
☐ Mechanical
☐ Plumbing/Gas
☐ Sign
☐ Roofing

4. Change to an Existing Permit (Choose only One)
☐ Change Contractor
☐ Extension
☐ Renewal
☐ Shop Drawing
☐ Lost Plans

5. Type of Improvement (Choose only One)
☐ New Construction
☐ Addition Attached
☐ Alteration Interior
☒ Alteration Exterior
☐ Repair/Replace
☐ Demolition/Partial
☐ Re-roof
☐ Driveway
☐ Fence
☐ Window
☐ Door
☐ Shutters
☐ Pool
☐ Shed
☐ Other: _____

6. Architect/Engineer Info
Name _____
Address _____
City _____ ST _____ Zip Code _____
Lic. No. _____ Discipline _____
Phone No. _____

7. Contact Info
Name Alex Varr
E-mail Alex@AlexElectric.net
Phone No. 305-8888830

8. Legal/Use/Work Value
Folio No. 05- _____ No. of Units _____
Lot ____ Block ____ Subdivision _____
Current Use of Property _____
Description of Work Upgrade Electrical Service
Square FT. _____ Linear FT. _____
Work Value 2000.00 Building Value _____
Flood Zone _____ Base Flood Elevation _____

Application is hereby made to obtain a permit to do the work and/or installations as indicated. I certify that no work or installation has commenced prior to the issuance of a permit and that all work will be performed to meet the standards of all laws regulating construction in this jurisdiction. I understand that a separate permit must be secured for Electrical, Plumbing, Signs, Wells, Pools, Furnaces, Boilers, Heaters, Tanks, Air Conditioning, Driveways, Portable Storage Units, etc.
Owner's Affidavit: I certify that all the foregoing information is accurate and that work will be done in compliance with all applicable laws regulating construction and zoning.

NOTICE REGARDING BUILDING PERMIT APPLICATIONS

The Completion and submission of a Building Permit Application is a requirement of securing a City Building Permit. The City will rely upon the information contained in the Application in determining whether a City Building Permit should be issued. The submission of inaccurate, misleading or misrepresented information in the Application shall subject the Building Permit to denial, suspension or revocation, and the individual applying for the permit, to all appropriate fines, penalties and other punishments authorized by law. KINDLY GOVERN YOURSELF ACCORDINGLY.
WARNING TO OWNER: YOUR FAILURE TO RECORD A NOTICE OF COMMENCMENT MAY RESULT IN YOU PAYING TWICE FOR IMPROVMENTS TO YOUR PROPERTY. IF YOU INTEND TO OBTAIN FINANCING, CONSULT WITH YOUR LENDER OR AN ATTORNEY BEFORE RECORDING YOUR NOTICE OF COMMENCEMENT.

Owner Information
Aillette A. Rodriguez Diaz — Print Name
X [signature] — Owners Signature
Sworn to and subscribed before me by Print Name _____
Who is personally known to me or produced _____
As identification, this _____ day of _____ 20__
Notary's Signatures _____
Printed Name of Notary _____
Notary Public State of Florida
Orlando Pascual
My Commission GG 243955
Expires 08/24/2022

Qualifier Information
Alex Varr — Print Name
[signature] — Qualifiers Signature
Sworn to and subscribed before me by Print Name _____
Who is personally known to me or produced _____
As identification, this _____ day of _____ 20__
Notary's Signatures _____
Printed Name of Notary _____
Notary Public State of Florida
Orlando Pascual
My Commission GG 243955
Expires 08/24/2022

DO NOT WRITE BELOW – FOR OFFICE USE ONLY

✓	Trade	Approved/Date	Disapproved/Date
	Zoning		
	Structural		
	Building		
	Electrical		
	Mechanical		
	Plumbing		
	Roofing		
	Flood		
	Publics Works		

Application Includes	Fees $	.00
Zoning		
Structural		
Base Fee	125	00
Scanning	5	00
Technology	12.	50
Rework		
Violation		
DBPR/DCA	4	00
Code Compliance	1.	20
(-) Upfront Fee	125	00
Balance Due	22.	70

Total 147.70

Revised 12/30/2015

IN THE CIRCUIT COURT OF THE ELEVENTH JUDICIAL CIRCUIT, IN AND FOR MIAMI-DADE COUNTY, FLORIDA PROBATE DIVISION IN RE: ESTATE OF ALAN DIAZ, Deceased. Case No. 18-003326 CP02 Section 04	E-4

LETTERS OF ADMINISTRATION

TO ALL WHOM IT MAY CONCERN

WHEREAS, ALAN DIAZ a resident of Miami Dade County, Florida, died on July 3, 2018 ("Decedent"), owning assets in the State of Florida, and

WHEREAS, AILLETTE A. RODRIGUEZ has/have been appointed personal representative(s) ("Personal Representative(s)") of the Decedent's estate ("Decedent's Estate") and has/have performed all acts prerequisite to issuance of Letters of Administration in the estate,

NOW, THEREFORE, I, the undersigned circuit judge, declare AILLETTE A. RODRIGUEZ, duly qualified under the laws of the State of Florida to act as Personal Representative(s) of Decedent's Estate, with full power to administer the Estate according to law; to ask, demand, sue for, recover and receive the property of the Decedent; to pay the debts of the Decedent as far as the assets of the Estate will permit and the law directs; and to make distribution of the Estate according to law.

These Letters of Administration are subject to the following restrictions:

- This Estate must be closed within 12 months, unless it is contested or its closing date is extended by court order.
- These letters do not authorize entry into any safe deposit box without further court order.
- The Personal Representative(s) shall place all liquid assets in a depository designated by the Court pursuant to the Section 69.031, Florida Statutes ("Depository"). This is a frozen account. No funds can be withdrawn without a court order.
- Attorney of Record shall file Receipt of Assets by Depository within thirty days from the issuance of these letters.
- These letters do not authorize the sale, encumbrance, borrowing, or gifting of any Estate assets without a special court order.
- If Florida real estate is sold, per court order, a closing statement shall be filed, and the sale's net proceeds shall be placed in the Depository.
- Inventory shall be filed within 60 days.

DONE AND ORDERED in Chambers at Miami-Dade County, Florida, on 01/16/19.

Celeste Hardee Muir

CELESTE HARDEE MUIR

CIRCUIT COURT JUDGE

No Further Judicial Action Required on THIS MOTION/PETITION
CLERK TO RECLOSE CASE IF POST JUDGMENT

The parties served with this Order are indicated in the Florida Courts E-Filing Portal "Notice of Service of Court Documents" email confirmation. The movant/petitioner shall IMMEDIATELY serve a true and correct copy of this Order, by mail, facsimile, email or hand-delivery, to all parties/counsel of record for whom service is not indicated in the "Notice of Service of Court Documents" email confirmation, and file proof of service with the Clerk of Courts.

OFFICE OF THE PROPERTY APPRAISER

Summary Report

Generated On : 10/31/2019

Property Information	
Folio:	05-3118-016-1590
Property Address:	200 N ESPLANADE DR Miami Springs, FL 33166-4412
Owner	ALAN DIAZ EST OF
Mailing Address	200 N ESPLANADE DR MIAMI SPRINGS, FL 33166-4412
PA Primary Zone	0400 SGL FAMILY - 901-1200 SQF
Primary Land Use	0101 RESIDENTIAL - SINGLE FAMILY : 1 UNIT
Beds / Baths / Half	2 / 1 / 0
Floors	1
Living Units	1
Actual Area	1,584 Sq.Ft
Living Area	1,210 Sq.Ft
Adjusted Area	1,288 Sq.Ft
Lot Size	7,500 Sq.Ft
Year Built	Multiple (See Building Info.)

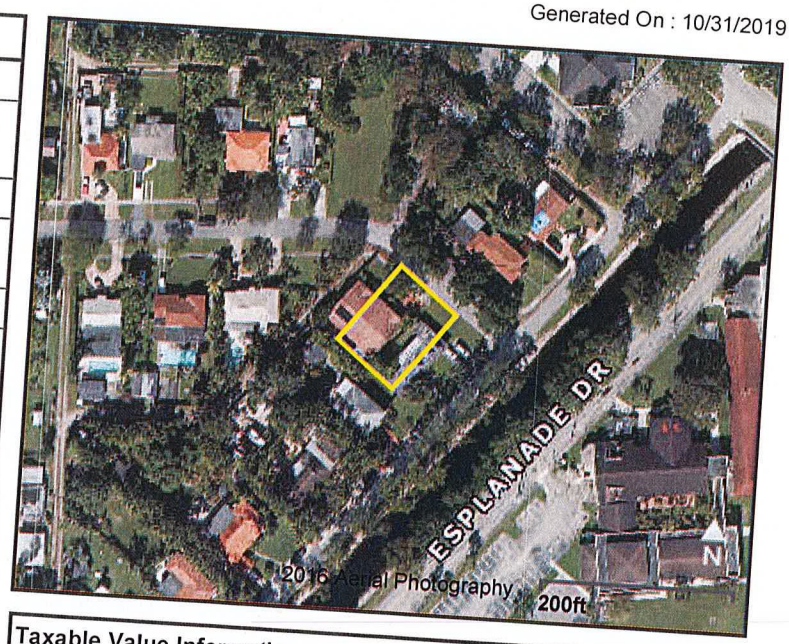

Assessment Information			
Year	2019	2018	2017
Land Value	$168,000	$168,000	$159,750
Building Value	$89,645	$96,600	$96,600
XF Value	$1,993	$2,017	$2,042
Market Value	$259,638	$266,617	$258,392
Assessed Value	$259,638	$138,988	$136,130

Taxable Value Information			
	2019	2018	2017
County			
Exemption Value	$0	$50,000	$50,000
Taxable Value	$259,638	$88,988	$86,130
School Board			
Exemption Value	$0	$25,000	$25,000
Taxable Value	$259,638	$113,988	$111,130
City			
Exemption Value	$0	$50,000	$50,000
Taxable Value	$259,638	$88,988	$86,130
Regional			
Exemption Value	$0	$50,000	$50,000
Taxable Value	$259,638	$88,988	$86,130

Benefits Information				
Benefit	Type	2019	2018	2017
Save Our Homes Cap	Assessment Reduction		$127,629	$122,262
Homestead	Exemption		$25,000	$25,000
Second Homestead	Exemption		$25,000	$25,000

Note: Not all benefits are applicable to all Taxable Values (i.e. County, School Board, City, Regional).

Sales Information			
Previous Sale	Price	OR Book-Page	Qualification Description
12/01/1986	$60,000	13114-2660	Sales which are qualified
02/01/1985	$68,500	12431-2385	Sales which are qualified

Short Legal Description
CINEMA PARK-COUNTRY CLUB ESTS
ADDN
PB 17-2
SELY 1/2 LOTS 1 & 2 BLK 58
LOT SIZE 100.000 X 75

ne Office of the Property Appraiser is continually editing and updating the tax roll. This website may not reflect the most current information on record. The Property Appraiser nd Miami-Dade County assumes no liability, see full disclaimer and User Agreement at http://www.miamidade.gov/info/disclaimer.asp

ersion:

tps://www8.miamidade.gov/Apps/PA/propertysearch/

CITY OF MIAMI SPRINGS
201 Westward Drive,
Miami Springs, FL 33166

AFFIDAVIT OF COMPLIANCE

I _____, the owner of 200 Esplanade Dr understand that I may not receive a final inspection on any new permits until all the expired permits or cases below are addressed in full.

Permit/Code Compliance Case No.	Description
03-1016	Replace Front Door
04-606	Slab

I as the owner understand that the listed permits and code compliance cases above are open and might delay me from receiving any final inspections on any new permit applications under my address. I will be addressing the permit(s) and/or code compliance case(s) within the six months of any newly issued permit.

OWNER

PRINT NAME: Arlette Rodriguez-Diaz

SIGNATURE: _____

STATE OF FLORIDA)
COUNTY OF MIAMI-DADE)
SWORN TO AND SUBSCRIBED BEFORE ME
THIS 6 DAY OF Nov, 20 19
BY Orlando Pascual

NOTARY SIGNATURE _____

SEAL:

Notary Public State of Florida
Orlando Pascual
My Commission GG 243955
Expires 08/24/2022

RECEIVED
NOV 0 7 2019
BY:.....

ALEX ELECTRIC SERVICES
2245 WEST 10 CT.
HIALEAH, FL 33010

ALEXANDER VARELA
OWNER/QUALIFIER

EC # 13001444
PH# 305-888-8830

OWNER NAME: AILLETE A. RODRIGUEZ
ADDRESS: 200 ESPLANADE DR
MIAMI SPRING, FL 33166

OFFICE COPY
CITY OF MIAMI SPRINGS

SCOPE OF WORK
NEW 200AMP SERVICE

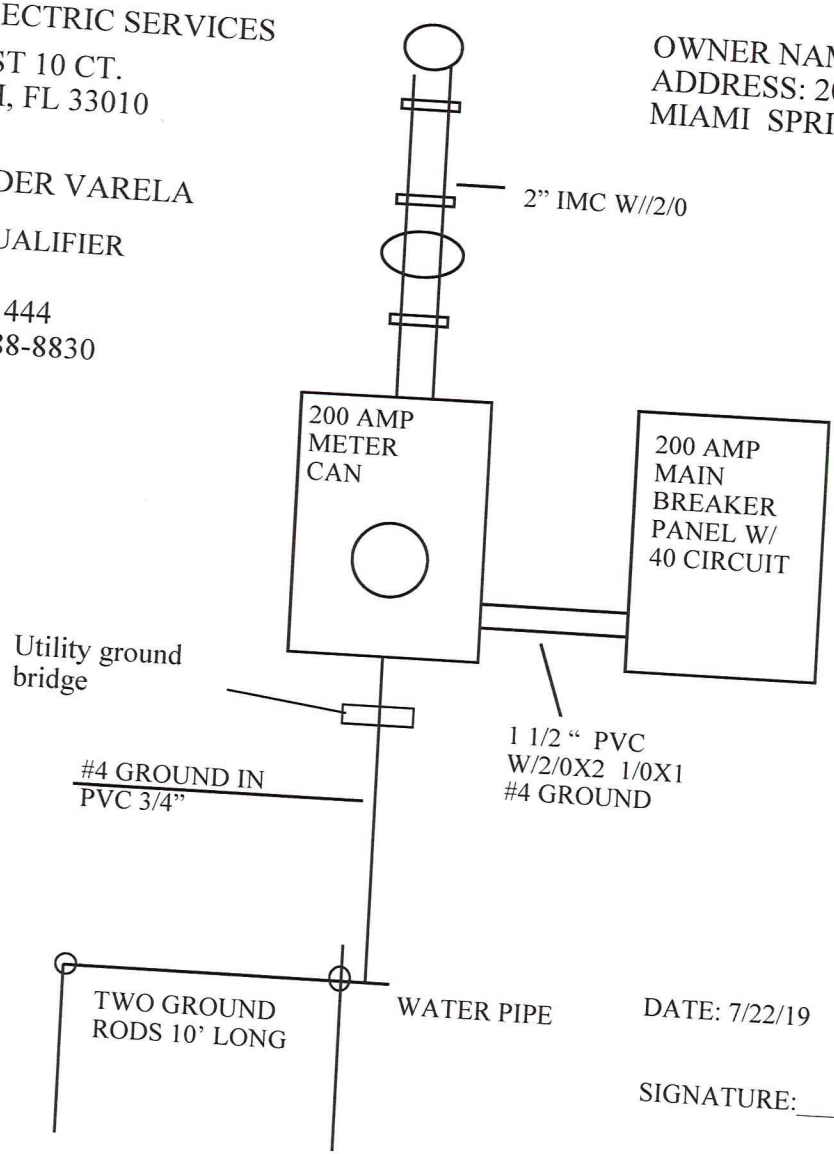

CITY OF MIAMI SPRINGS
APPROVED
FOR PERMIT ONLY
BUILDING INSPECTOR
PLUMBING INSPECTOR
ELECTRICAL INSPECTOR 11-8-19
MECHANICAL INSPECTOR
ZONING
STRUCTURAL

DATE: 7/22/19

SIGNATURE:

EC13014440 10-31-19

Job Name: AILLETTTE A. RODRIGUEZ 200 ESPLANADE DR

Optional Calculation Method

Article 220.80

1 Must be a 3 wire service, 1 Phase
2 Voltages allowed 120/240, 120/208
3 **Ampacity greater than 100 amps**
4
5

Qty.	Description	Watts	Subtotal
976	Square Feet of Living Space	3	2928
1	Small Appliance Cirduits	1500	1500
1	refrigerator	1750	1250
1	Range	12000	12000
1	water Heater	4500	4500
1	Dishwasher	1250	1250
1	microwave	1250	1250
2	bath Room GFCI	1500	3000
1	Breakers 20A	1250	1250
1	Sprinkler pump	1750	1750
1	Laundry washer	1500	1500
1	Dryer	3400	3400
	Subtotal Residence		35578
	24v Pool Lights	150	0
	Blower	1440	0
	Pool Pump	1750	0
	Garage Door	1500	0
	Aqua Rite / Auto Pilot	350	0
	Subtotal Sprinkler + Res. Lgts. & Appl.		35578
	First 10,000 watts @ 100%		10000
35578	*minus 10,000 X 40% = Remainder*		10231.2
	Subtotal Demand Watts		20231.2

Number of Lighting Circits Required in Panel

2	15	amp circuits
1	20	amp circuits

Optional method must use 12000 for ranges

1/2 HP @ 120/240Volts is 1176 Watts
3/4 HP 120/240volts is 1656 Watts
1HP @ 120/240 Volts is 1920 Watts
11/2HP @ 120/240 Volts is 2400 Watts
2 HP @ 120/240 Volts is 2880 Watts

RECEIVED
NOV 07 2019
BY: .....

					0		
Noncoincidental Loads	1	A/C Compressor#1	7000	7000	10000	0.00	Amps
	1	Heat Strips #1	10000	10000		41.67	Amps
Noncoincidental Loads					0		
		Heat Strips #2				0.00	Amps
Noncoincidental Loads		A/C Compressor#3			0		
		Heat strips#3				0.00	Amps
					0		
		Pool Heat Pump		12000	0	0.00	Amps
		Subtotal A/C Cooling & Heating Equipment			10000	0.00	Amps

○ Residential Derating

Total Watts

30231.200

Total Amps

125.96

EC-13004444
1038-ic

PERMIT ROUTING LOG SHEET

CITY OF MIAMI SPRINGS

Work Site Address 200 Esplanade Dr

Owner's Name Ailette Loangwee

Contractor's Name Alex Electric Service

Permit No. 20-130

Date Received 11/07/19

Contact Phone No. (305) 888-8830

Reviewer	Approved	Date	Disapproved	Date	Comments: Upgrade Electrical Sy
☐ Zoning $_____					
☐ Mechanical $_____					
☑ Electrical $_____	AM 11-8-19				
☐ Plumbing $_____					
☐ Public Works $_____					
☐ Structural $_____					
☐ Building ☐ Roofing $_____					
Building Specialist (Comments)					

City of
Miami Springs
Florida

CERTIFICATE OF RE-OCCUPANCY

The following property was inspected on July 28, 2021. It has been determined that the subject premises is in compliance with the single family residential occupancy regulations of the City Code of Ordinances and that the dwelling is designed, configured, and being used for single-family residential purposes only.

Address: 200 N ESPLANADE DR., MIAMI SPRINGS, FL 33166 Folio # 05-3118-016-1590

Legal Description: CINEMA PARK-COUNTRY CLUB ESTS ADDN PB 17-2
SELY 1/2 LOTS 1 & 2 BLK 58 LOT SIZE 100.000 X 75 OR 13114-2660 1286 1

This certificate of Re-Occupancy shall remain effective for forty-five (45) days from issuance. This certificate shall expire and be of no force or affect if not recorded on or before September 11, 2021.

Upon the closing of any transfer or conveyance of title of any single-family residential premises issued a certificate pursuant to the provisions hereof, this original Re-Occupancy Certificate shall be recorded in the Public Records of Miami-Dade County, Florida, along with the deed or other title conveyance document for the subject premises.

R. Novo
Code Compliance Officer

July 28, 2021
Issuance Date

Rosemary Novo
State of Florida
County of Miami-Dade
Sworn to and subscribed before me this 28th day of July, 2021
By:

Notary Public State of Florida
Sandra Duarte
My Commission GG 278770
Expires 11/25/2022

Signature of Notary Public, State of Florida

Sandra Duarte
(Notary's name printed, stamped or typed)
Personally known: XX
Produced Identification: _____
Type of Identification produced: _____

This instrument prepared by City of Miami Springs, 201 Westward Drive, Miami Springs, Florida 33166, Phone (305) 805-5030

21.0417

CITY OF MIAMI SPRINGS
APPLICATION FOR A CERTIFICATE OF
RE-OCCUPANCY INSPECTION

Address: 200 N. Esplanade Dr. Miami Springs, FL. 33166 Folio# 05-3118-016-1590

Person to contact for inspection: Aillette A. Rodriguez-Diaz

Telephone # 786-879-1581 Date of application 7/19/2021

Cellular # ↑ E-mail Aillette0530@GMAIL.COM.

Buyer's Name(s) JOVANY JIMENEZ and ABABAR SARA PREVAL
PLEASE PRINT CLEARLY

Seller's Name(s) AILLETTE A. RODRIGUEZ-DIAZ
PLEASE PRINT CLEARLY

CITY OF MIAMI SPRINGS BUILDING DEPARTMENT

Existing Zoning:

JUL 23 2021

RECEIVED

Legal Description Southeasterly ½ Lots 1 & 2, Block 58, CINEMA PARK ADDITION TO COUNTRY CLUB ESTATES according to the Plat thereof as recorded in Plat 17, Page 2, of the Public Records of Miami-Dade Count FLORIDA.

THE BUILDING MAY ONLY BE LEGALLY OCCUPIED AS A SINGLE FAMILY RESIDENCE.

A RE-OCCUPANCYCERTIFICATE SHALL NOT CONSTITUTE ANY REPRESENTATION OR WARRANTY AS TO THE CONDITION, OR ANY ASPECT OF SUCH CONDITION, OF THE SUBJECT PREMISES, FOR WHICH THE CERTIFICATE WAS ISSUED. THE CITY REVIEW AND INVESTIGATION MADE IN CONNECTION WITH THE ISSUANCE OF ANY RE-OCCUPANCY CERTIFICATE IS NEITHER A STRUCTURAL, ELECTRICAL, PLUMBING, MECHANICAL OR ANY OTHER SUBSTANTIVE INSPECTION OF THE STRUCTURE ON ANY PROPERTY AND DOES NOT REPRESENT THAT THE PREMISES CONFORMS TO THE REQUIREMENTS OF THE CODE OF ORDINANCES, INCLUDING, BUT NOT LIMITED TO, THE BUILDING AND TECHNICAL CODE PROVISIONS ADOPTED BY THE CITY.

INTERESTED PERSONS ARE ADVISED AND ENCOURAGED TO OBTAIN A PRIVATE INSPECTION OF THE PREMISES IN ORDER TO DETERMINE THE CONDITION THEREOF.

Wed. 28th
11AM Confirmed

ATTENTION
UP TO 10 DAYS FROM THE DATE OF THIS APPLICATION TO
ON. PLEASE FILE YOUR APPLICATION ACCORDINGLY

CITY OF MIAMI SPRINGS
CERTIFICATE OF RE-OCCUPANCY
DISCLOSURE STATEMENT

Address: 200 N. Esplanade Dr. Miami Springs, FL 33166 Folio #: 05-3118-0116-1590

Buyer's Name Jovany Jimenez and Ambar Sara Preval Telephone# _____

Co-Buyer's Name _____ Telephone# _____

Seller's name Ailette Rodriguez-Diaz Telephone# 786-879-1581

Co-Seller's Name _____ Telephone# _____

The Seller does hereby disclose to the Buyer that a Certificate of Re-Occupancy is required according to the **CITY OF MIAMI SPRINGS, FLORIDA, CODE SECTION 102.**

CITY OF MIAMI SPRINGS, FLORIDA, CODE SECTION 102 provides that a Certificate of Re-Occupancy, if issued, shall state that the City has inspected the dwelling and determined that the dwelling complies with the residential occupancy regulations of the zoning district on the property wherein the dwelling unit is located.

Seller's Signature:

Print Name: Ailette A. Rodriguez Diaz
Date Signed: 07-19-2021
Sworn to and subscribed before me by:
Ailette A. Rod. Diaz who is
Personally known to me: _____ or
Produced ID #: FDL 81-690-0
This 19 day of July 2021

Notary's Signature
Emily Murillo
Notary's printed name, stamped or typed

EMILY MURILLO
MY COMMISSION # HH 123670
EXPIRES: April 28, 2025
Bonded Thru Notary Public Underwriters

Buyer's Signature:

Print Name: Jovany Jimenez
Date Signed: 7/21/21
Sworn to and subscribed before me by:
Jovany Jimenez who is
Personally known to me: ✓ or
Produced: ID#: _____
This 21 day of July 2021

Notary's Signature
Ana Meilyn Zuferri
Notary's printed name, stamped or typed

ANA MEILYN ZUFERRI
Commission # HH 007194
Expires July 18, 2024
Bonded Thru Budget Notary Services

Co-Seller(s) Signature:

Print Name: _____
Date Signed: _____
Sworn to and subscribed before me by:
_____ who is
Personally known to me: _____ or
Produced ID #: _____
This _____ day of _____ 20___.

Notary's Signature
Notary's printed name, stamped or typed

Co-Buyer(s) Signature:

Print Name: Ambar Preval
Date Signed: 7/21/21
Sworn to and subscribed before me by:
Ambar Preval who is
Personally known to me: ✓ or
Produced: ID#: _____
This 21 day of July 2021

Notary's Signature
Ana Meilyn Zuferri
Notary's printed name, stamped or typed

ANA MEILYN ZUFERRI
Commission # HH 007194
Expires July 18, 2024
Bonded Thru Budget Notary Services

OFFICE OF THE PROPERTY APPRAISER

Summary Report

Generated On : 7/23/2021

Property Information	
Folio:	05-3118-016-1590
Property Address:	200 N ESPLANADE DR Miami Springs, FL 33166-4412
Owner	AILLETTE A RODRIGUEZ DIAZ
Mailing Address	2655 COLLINS AVE 508 MIAMI BEACH, FL 33140 USA
PA Primary Zone	0400 SGL FAMILY - 901-1200 SQF
Primary Land Use	0101 RESIDENTIAL - SINGLE FAMILY : 1 UNIT
Beds / Baths / Half	2 / 1 / 0
Floors	1
Living Units	1
Actual Area	1,584 Sq.Ft
Living Area	1,210 Sq.Ft
Adjusted Area	1,288 Sq.Ft
Lot Size	7,500 Sq.Ft
Year Built	Multiple (See Building Info.)



Assessment Information			
Year	2021	2020	2019
Land Value	$195,000	$168,000	$168,000
Building Value	$89,645	$89,645	$89,645
XF Value	$1,943	$1,968	$1,993
Market Value	$286,588	$259,613	$259,638
Assessed Value	$286,588	$259,613	$259,638

Taxable Value Information			
	2021	2020	2019
County			
Exemption Value	$0	$0	$0
Taxable Value	$286,588	$259,613	$259,638
School Board			
Exemption Value	$0	$0	$0
Taxable Value	$286,588	$259,613	$259,638
City			
Exemption Value	$0	$0	$0
Taxable Value	$286,588	$259,613	$259,638
Regional			
Exemption Value	$0	$0	$0
Taxable Value	$286,588	$259,613	$259,638

Benefits Information				
Benefit	Type	2021	2020	2019

Note: Not all benefits are applicable to all Taxable Values (i.e. County, School Board, City, Regional).

Short Legal Description
CINEMA PARK-COUNTRY CLUB ESTS
ADDN
PB 17-2
SELY 1/2 LOTS 1 & 2 BLK 58
LOT SIZE 100.000 X 75

Sales Information			
Previous Sale	Price	OR Book-Page	Qualification Description
09/18/2020	$100	32182-3861	Corrective, tax or QCD; min consideration
06/18/2020	$100	31992-2776	Trustees in bankruptcy, executors or guardians
12/01/1986	$60,000	13114-2660	Sales which are qualified
02/01/1985	$68,500	12431-2385	Sales which are qualified

The Office of the Property Appraiser is continually editing and updating the tax roll. This website may not reflect the most current information on record. The Property Appraiser and Miami-Dade County assumes no liability, see full disclaimer and User Agreement at http://www.miamidade.gov/info/disclaimer.asp

Version:

City of Miami Springs
Certificate of Re-Occupancy

Property Address: 200 N. Esplanade Dr. Miami Springs, FL 33166
Date: 7-19-2021
Current Property Owner: AILLETTE A. RODRIGUEZ-DIAZ

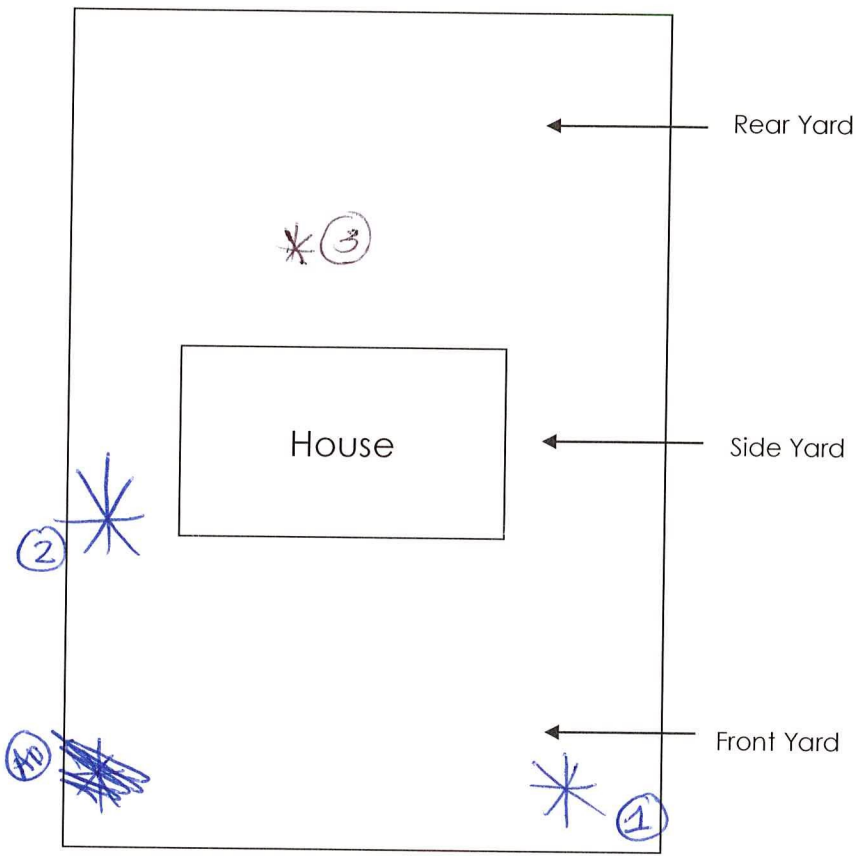

Please show all trees on property. Mark tree locations and number all the X's, then list the trees to the right number and the approximate size of the tree.

Tree #	Tree Type	Approx. Size
1	Approx Tropical	Umbrella
2	Unk	
3	Unk	

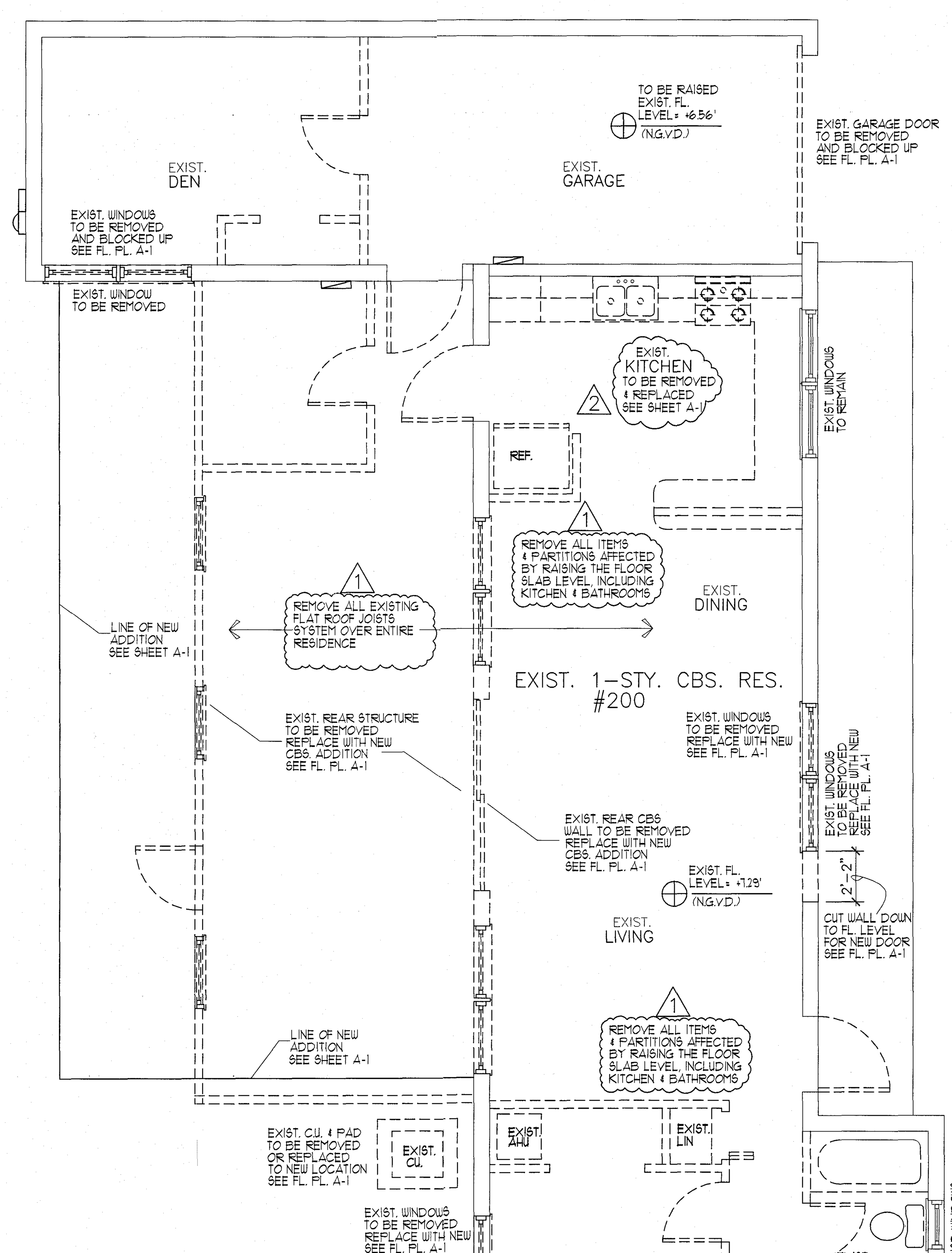

WALL LEGEND	
(solid double line)	EXIST. 8"BLOCK WALL TO REMAIN
(heavy double line)	NEW 4" OR 8"PARTITION SEE FL.PL. (2x4 WOOD STUDS) OR (26ga METAL CHANNELS)
(thin double line)	EXIST.4"PARTITION TO REMAIN
(dashed double line)	EXIST. 4"PARTITION TO BE REMOVED OR CONC. BLK. WALL TO BE REMOVED
(hatched)	NEW 8" CONC.BLOCK WALL SEE FL.PL.

ALTERATION PROJECT PROCEDURES:

A. REQUIREMENTS INCLUDED:

1. COORDINATE WORK OF TRADES AND SCHEDULE ELEMENTS OF ALTERATIONS AND RENOVATION WORK BY PROCEDURES AND METHODS TO EXPEDITE COMPLETION OF THE WORK.
2. CUT, MOVE OR REMOVE ITEMS AS NECESSARY TO PROVIDE ACCESS OR TO ALLOW ALTERATIONS AND NEW WORK TO PROCEED. INCLUDE SUCH ITEM AS:
   a. REPAIR OR REMOVAL OF HAZARDOUS OR UNSANITY CONDITIONS.
   b. REMOVAL OF ABANDONED ITEMS AND ITEMS SERVING NO USEFUL PURPOSE, SUCH AS ABANDONED PIPING, CONDUIT, AND WIRING.
   c. REMOVAL OF UNSUITABLE OR EXTRAGENEOUS MATERIALS NOT MARKED FOR SALVAGE, SUCH AS ABANDONED EQUIPMENT AND DEBRIS INCLUDING ROTTED WOOD, RUSTED METALS AND DETERIORATED CONCRETE.
3. ALTERATIONS AND CONNECTIONS OF NEW CONTRUCTION TO EXISTING CONSTRUCTION OCCUR AT DUST SENSITIVE AREAS. EXECUTE ALL MEASURES TO COMPLETELY CONTROL AND SEPARATE DUST FROM EXISTING AREA AND EQUIPMENT.

EXIST./DEMO FLOOR PLAN

SCALE:1/4"=1'-0"

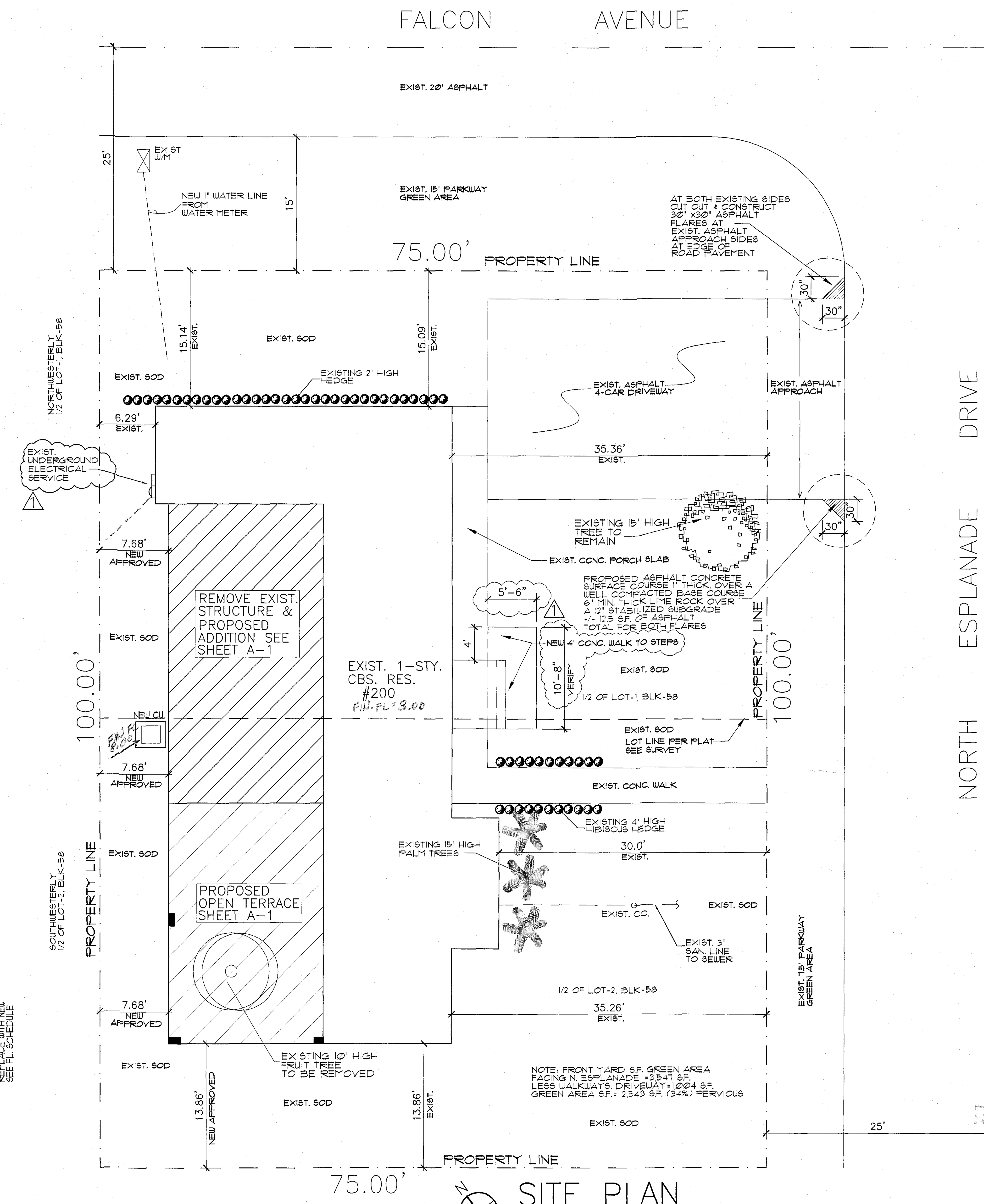

SITE PLAN

SCALE: 1/8"=1'-0"
SEE SURVEY

FLOOD CRITERIA INFO:
FLOOD ZONE= AH,
BASE FLOOD ELEVATION 7.0'
NEW FLOOR SLAB ELEVATION 8.0' (N.G.V.D.)
SEE ELEVATION CERTIFICATE ATTACHED.

ENVIRONMENTAL RESOURCES & LANDSCAPING TREES NOTES:

NOTE: (1) FRUIT TREE WILL BE REMOVED DURING CONSTRUCTION.
NOTE: FOR ANYOTHER NEARBY TREES THAT MAY BE AFFECTED BY THE NEW CONSTRUCTION PROTECT EXIST. TREES PROVIDE 10'-12' BARRIES AROUND TREES TO REMAIN WITH A TEMPORARY PLYWD. PARTITIONS OR SAFETY MESH ALL DAMAGED PLANT MATERIAL INCLUDING SOD MUST BE RESTORED PRIOR TO FINAL BUILDING INSPECTION.
ALL OTHER EXISTING SHRUBS & HEDGES INCLUDING SOD TO REMAIN AS IS.

DESIGN CRITERIA

CODE EDITION: 2020-7th EDITION FLORIDA BUILDING CODE
AS PER CODE REFERENCE STANDARDS CHAPTER 35
CODE REFERENCES: ASCE/SEI 7-16, ACI 318-14, NDS 2018,AWC AF & PA-92, ASTM A615, ASTM D-698, & AITC, AISI S100-16,
MECHANICAL 2020-7th EDITION FLORIDA BUILDING CODE
ELECTRICAL 2020-7th EDITION FLORIDA BUILDING CODE
PLUMBING 2020-7th EDITION FLORIDA BUILDING CODE
NATIONAL ELECTRIC CODE (NEC 2017)
EXISTING BUILDINGS 2020-7th EDITION FLORIDA BUILDING CODE
FLORIDA FIRE PREVENTION CODE 2020 7th Edition
FLORIDA ACCESSIBILITY CODE 2020 7th Edition
ASCE/SEI 7-16 EXPOSURE CONDITION INDICATED=C
CONSTRUCTION TYPE VB UNPROTECTED
OCCUPANCY CLASSIFICATION R-3
ALTERATION LEVEL-3

I CERTIFY THIS IS BEING DESIGNED TO WITHSTAND 175 MPH WIND SPEED ACCORDING TO ASCE 7-16 AS REQUIRED BY THE FLORIDA BUILDING CODE REVISED 2020 EDITION 7th EDITION

ZONING LEGEND

ZONING CLASSIFICATION	SINGLE FAMILY RESIDENTIAL (R-1C) DISTRICT
TOTAL GROSS LOT AREA:	12,500 SQ.FT.
NET LOT AREA :	7,500 SQ.FT.
LOT COVERAGE REQUIRED:	40%
LOT COVERAGE PROVIDED	32%

other conc. impervious areas 850 S.F.
GREEN AREA TO REMAIN 4,275 57%

EXIST. BULD'G. FT. PRINT	1,718 SQ.FT.
NEW ADDITIONAL S.F.	+ 189 SQ.FT.
EXIST. BEING REMOVED/REMODELED	- 404 SQ.FT.
TOTAL NEW UNDER A/C AREA S.F.	1,907 SQ.FT. A/C
NEW OPEN TERRACE S.F.	+ 467 SQ.FT.
(NEW TOTAL FT. PRINT S.F.)=	2,374 SQ.FT.

3 PARKING SPACES REQUIRED.
EXIST. CONC. DRIVEWAY FOR 4 CARS AT FRONT YARD.

SETBACKS REQUIRED:	
FRONT	30.00'
INTERIOR SIDE	7.50'
STREET SIDE	15.00'
REAR	25.00'
BETWEEN BUILDINGS	20.00'

SETBACKS PROVIDED:	
FRONT	15.09' EXIST. CONDITION APPV'D.
INTERIOR SIDE	7.67' PROPOSED
STREET SIDE	35.36' EXIST. CONDITION APPV'D.
REAR	13.86' MATCH EXIST. CONDITION APPV'D.
BETWEEN BUILDINGS	N/A

INDEX OF DRAWINGS

SP-1/D-1 SITE PLAN AND EXIST. & DEMO FLOOR PLAN
A-1 PROPOSED FLOOR PLANS, SCHED. & DETS.
A-2 FOUNDATIONS & STRUCTURAL SECTIONS/DETAILS
A-3 WINDOW SCHEDULES & DETAILS
A-4 PROPOSED ELEVATIONS
A-5 ROOF PLAN & STRUCTURAL DETAILS
A-6 ROOF DIAGRAM & OTHER DETAILS, NOTES.
M-1 MECHANICAL SHEET AND SCHEDULES, DETAILS
E-1 ELECTRICAL SHEET AND SCHEDULES. RISERS
P-1 PLUMBING SHEET AND DETAILS.
P-2 PLUMBING SHEET AND DETAILS.

SCOPE OF WORK:

NOTE: THIS IS A EXISTING RESIDENCE WITH MOST OF IT BEING REMODELED.
ALSO THERE IS A PROPOSED ADDITION BEING ADDED TO THE REAR OF RESIDENCE.
REMOVE AND REPLACE ALL WINDOWS AND EXTERIOR DOORS AT EXISTING RESIDENCE.
REMOVE ALL EXIST. FLAT ROOF AND PROVIDE NEW TRUSS SYSTEM OVER ENTIRE STRUCTURE.
REMOVE ALL EXIST. PARTITIONS AND KITCHEN CABINETS (TO REINSTALL LATER).
REMOVE ALL EXIST. BATHROOMS DUE TO RAISING OF THE FLOOR SLAB. SEE D-1 & A-2
PROVIDE NEW ROOF FINISHES AT EXISTING AND NEW ADDITION UNDER A SEPARATE PERMIT.
ADDITION CONSISTS OF 2 NEW BEDROOMS & 2 NEW BATHROOMS WITH DEN.
REMOVE GARAGE DOOR AND BLOCK UP WITH WINDOW AT FRONT AS SHOWN ON A-1.
RELOCATE CERTAIN WINDOW & DOOR OPENINGS AND BLOCK UP OTHER WALL AREAS.
SEE FLOOR PLAN AND SECTIONS FOR NEW & EXIST. BLOCK WALLS & NEW TIE BEAMS.
PROVIDE NEW CONCRETE STARTER COLUMNS & CONC. BEAMS AS SHOWN ON PLAN.
WITH NEW WINDOWS/DOORS, & VERTICAL REBAR TIE COLUMNS AT NEW WALLS.
SEE PLAN FOR ALL NEW AND EXISTING CONDITIONS BEING ALTERED AND OR MODIFIED.
SEE MECHANICAL WORK AS PART OF THIS PERMIT.
SEE ELECTRICAL WORK AS PART OF THIS PERMIT.
SEE PLUMBING WORK AS PART OF THIS PERMIT.

LEGAL DESCRIPTION: FOLIO#=05-3118-016-1590
SELY 1/2 LOTS 1 & 2, BLOCK 58, OF "CINEMA PARK-COUNTRY CLUB ESTS ADDITION" PLAT BOOK 17, PAGE 2 AS RECORDED 13114-2660 1. OF THE PUBLIC RECORDS OF MIAMI DADE COUNTY.

NOTE: THE ARCHITECT OR ENGINEER OF RECORD IS NOT RESPONSIBLE FOR ANY UNEXPECTED OR UNFORESEEN OR HIDDEN EXISTING CONDITIONS THAT HAVE NOTHING TO DO WITH THE PROPOSED WORK. THESE ISSUES IF ANY WILL BE ADDRESSED SEPARATELY, AND ADDED TO THE SCOPE OF WORK.

NOTE: TRADE CONTRACTOR IS RESPONSIBLE FOR ANY COST EFFECTIVE REVISIONS TO PLANS IF ORIGINAL DESIGN OF APPROVED PLANS ARE NOT FOLLOWED. A DIFFERENT METHOD IN DESIGN MAY BE USED AFTER CONSTRUCTION & PERMIT DOCUMENTS ARE ACTIVE IN FIELD, BUT AGAIN TRADE CONTRACTOR WILL BE RESPONSIBLE FOR ANY INCURRED COSTS DUE TO ANY REQUIRED REVISION WORK ON THE ORIGINAL APPROVED PLANS. ANY AND ALL CHANGES TO PLANS MUST BE APPROVED BY THE ENGINEER OR ARCHITECT OF RECORD & BUILDING DEPT. AND WILL BE BILLED ACCORDINGLY.

CALL 48 HOURS BEFORE YOU DIG IN FLORIDA
IT'S THE LAW
1-800-432-4770
SUNSHINE STATE ONE CALL OF FLORIDA, INC.

CITY OF MIAMI SPRINGS BUILDING DEPARTMENT RECEIVED
REWORK
CITY OF MIAMI SPRINGS APPROVED FOR PERMIT ON
OFFICE COPY CITY OF MIAMI SPRINGS
SEPARATE PERMIT REQUIRED FOR ROOFING, PLUMBING ELECTRICAL, MECHANICAL, SHUTTERS, WINDOWS, DOORS AND DRIVEWAYS

NO.	DATE
1	3-22-22 REVISED TO RAISE EXIST. FL. LEVEL TO 8.0
2	
3	
4	

DESG · DRWN · CHKD · APRV · DATE

PROJECT NAME: ADDITION TO RESIDENCE FOR:
OWNER/PH: AMBAR PREVAL 786-587-7391
ADDRESS:200 N. ESPLANADE DRIVE MIAMI SPRINGS, FLORIDA 33166
PROJECT ADD: SAME

Guillermo Ramon Gonzalez
9000 SW. 168th Avenue Miami Florida 33196 Ph:305-484-8171 Ph:786-237-5154 (assistant)
Registered Architect #13960

STATE OF FLORIDA GUILLERMO RAMON GONZALEZ AR0013960 Seal REGISTERED ARCHITECT
Guillermo Ramon Gonzalez
R.A. 13960
STATE OF FLORIDA

101521

SP-1
D-1

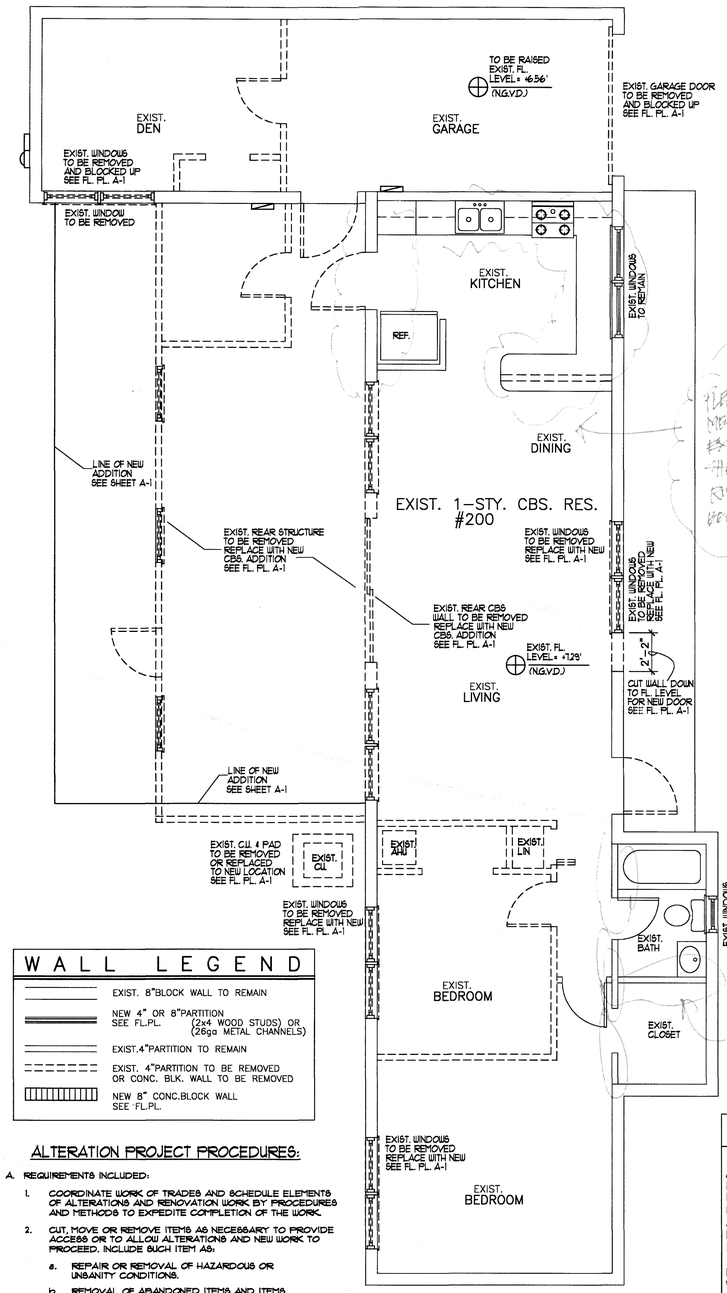

WALL LEGEND

- EXIST. 8"BLOCK WALL TO REMAIN
- NEW 4" OR 8"PARTITION SEE FL.PL. (2x4 WOOD STUDS) OR (26ga METAL CHANNELS)
- EXIST.4"PARTITION TO REMAIN
- EXIST. 4"PARTITION TO BE REMOVED OR CONC. BLK. WALL TO BE REMOVED
- NEW 8" CONC.BLOCK WALL SEE FL.PL.

ALTERATION PROJECT PROCEDURES:

A. REQUIREMENTS INCLUDED:

1. COORDINATE WORK OF TRADES AND SCHEDULE ELEMENTS OF ALTERATIONS AND RENOVATION WORK BY PROCEDURES AND METHODS TO EXPEDITE COMPLETION OF THE WORK.
2. CUT, MOVE OR REMOVE ITEMS AS NECESSARY TO PROVIDE ACCESS OR TO ALLOW ALTERATIONS AND NEW WORK TO PROCEED. INCLUDE SUCH ITEM AS:
   a. REPAIR OR REMOVAL OF HAZARDOUS OR UNSANITY CONDITIONS.
   b. REMOVAL OF ABANDONED ITEMS AND ITEMS SERVING NO USEFUL PURPOSE, SUCH AS ABANDONED PIPING, CONDUIT, AND WIRING.
   c. REMOVAL OF UNSUITABLE OR EXTRAGENEOUS MATERIALS NOT MARKED FOR SALVAGE, SUCH AS ABANDONED EQUIPMENT AND DEBRIS INCLUDING ROTTED WOOD, RUSTED METALS AND DETERIORATED CONCRETE.
3. ALTERATIONS AND CONNECTIONS OF NEW CONTRUCTION TO EXISTING CONSTRUCTION OCCUR AT DUST SENSITIVE AREAS. EXECUTE ALL MEASURES TO COMPLETELY CONTROL AND SEPARATE DUST FROM EXISTING AREA AND EQUIPMENT.

N

EXIST./DEMO FLOOR PLAN

SCALE:1/4"=1'-0"

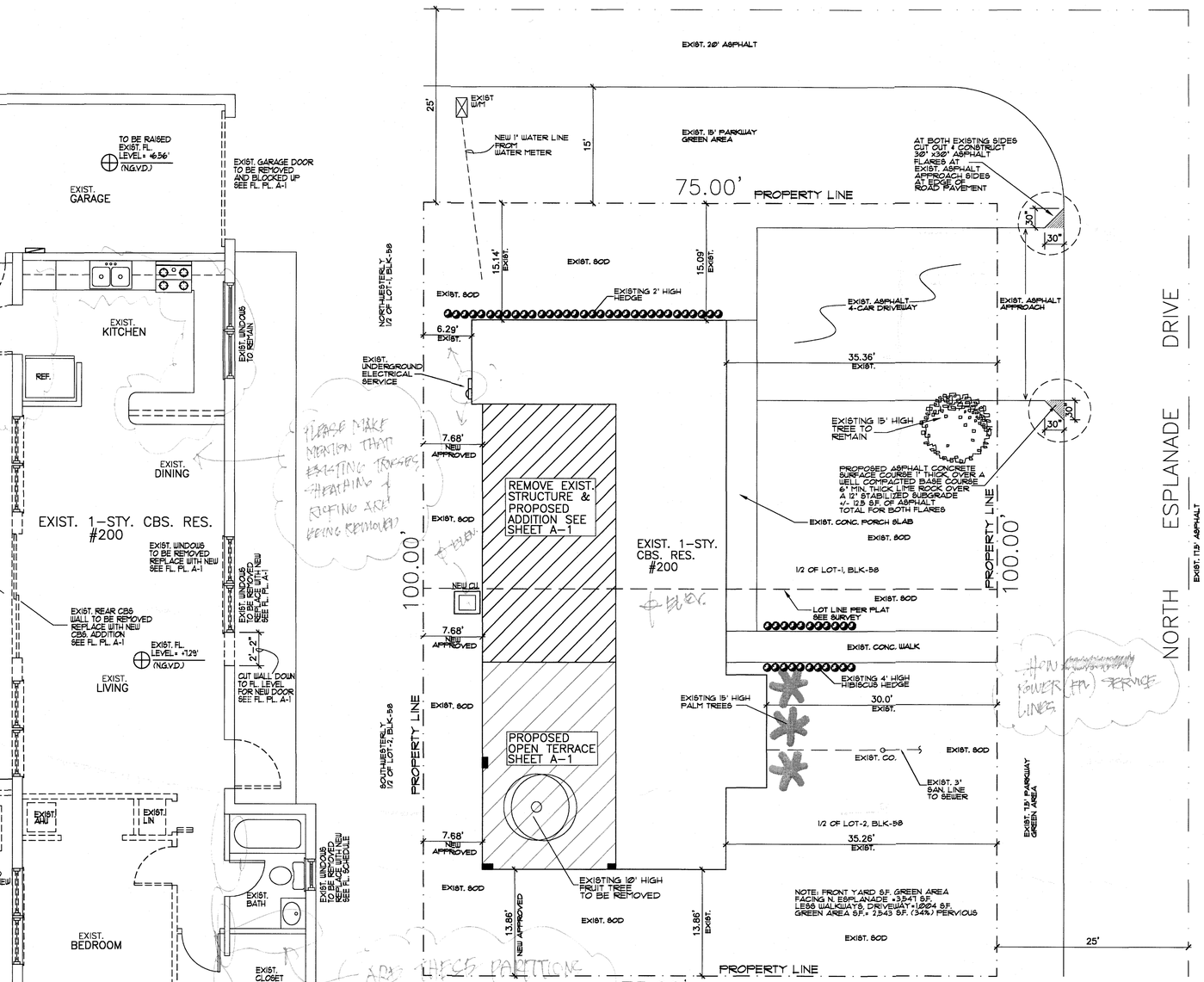

N

SITE PLAN

SCALE: 1/8"=1'-0"
SEE SURVEY

SCOPE OF WORK:

NOTE: THIS IS A EXISTING RESIDENCE WITH A PORTION OF IT BEING REMODELED.
ALSO THERE IS A PROPOSED ADDITION BEING ADDED TO THE REAR OF RESIDENCE.
REMOVE AND REPLACE ALL WINDOWS AND EXTERIOR DOORS AT EXISTING RESIDENCE.
REMOVE ALL EXIST. FLAT ROOF AND PROVIDE NEW TRUSS SYSTEM OVER ENTIRE STRUCTURE.
PROVIDE NEW ROOF FINISHES AT EXISTING AND NEW ADDITION UNDER A SEPARATE PERMIT.
ADDITION CONSISTS OF 2 NEW BEDROOMS & 2 NEW BATHROOMS WITH DEN.
REMOVE GARAGE DOOR AND BLOCK UP WITH WINDOW AT FRONT AS SHOWN ON A-1.
RELOCATE CERTAIN WINDOW & DOOR OPENINGS AND BLOCK UP OTHER WALL AREAS.
SEE FLOOR PLAN AND SECTIONS FOR NEW & EXIST. BLOCK WALLS & NEW TIE BEAMS.
PROVIDE NEW CONCRETE STARTER COLUMNS & CONC. BEAMS AS SHOWN ON PLAN.
WITH NEW WINDOWS/DOORS, & VERTICAL REBAR TIE COLUMNS AT NEW WALLS.
SEE PLAN FOR ALL NEW AND EXISTING CONDITIONS BEING ALTERED AND OR MODIFIED.
SEE MECHANICAL WORK AS PART OF THIS PERMIT.
SEE ELECTRICAL WORK AS PART OF THIS PERMIT.
SEE PLUMBING WORK AS PART OF THIS PERMIT.

NOTE: THE ARCHITECT OR ENGINEER OF RECORD IS NOT RESPONSIBLE FOR ANY UNEXPECTED OR UNFORESEEN OR HIDDEN EXISTING CONDITIONS THAT HAVE NOTHING TO DO WITH THE PROPOSED WORK. THESE ISSUES IF ANY WILL BE ADDRESSED SEPARATELY, AND ADDED TO THE SCOPE OF WORK.

NOTE: TRADE CONTRACTOR IS RESPONSIBLE FOR ANY COST EFFECTIVE REVISIONS TO PLANS IF ORIGINAL DESIGN OF APPROVED PLANS ARE NOT FOLLOWED. A DIFFERENT METHOD IN DESIGN MAY BE USED AFTER CONSTRUCTION & PERMIT DOCUMENTS ARE ACTIVE IN FIELD, BUT AGAIN TRADE CONTRACTOR WILL BE RESPONSIBLE FOR ANY INCURRED COSTS DUE TO ANY REQUIRED REVISION WORK ON THE ORIGINAL APPROVED PLANS. ANY AND ALL CHANGES TO PLANS MUST BE APPROVED BY THE ENGINEER OR ARCHITECT OF RECORD & BUILDING DEPT. AND WILL BE BILLED ACCORDINGLY.

LEGAL DESCRIPTION: FOLIO#=05-3118-016-1590

SELY 1/2 LOTS 1 & 2, BLOCK 58, OF "CINEMA PARK-COUNTRY CLUB ESTS ADDITION" PLAT BOOK 17, PAGE 2 AS RECORDED 13114-2660 1. OF THE PUBLIC RECORDS OF MIAMI DADE COUNTY.

CALL 48 HOURS BEFORE YOU DIG IN FLORIDA
IT'S THE LAW
1-800-432-4770
SUNSHINE STATE ONE CALL OF FLORIDA, INC.

ENVIRONMENTAL RESOURCES & LANDSCAPING TREES NOTES:

NOTE: (1) FRUIT TREE WILL BE REMOVED DURING CONSTRUCTION.
NOTE: FOR ANYOTHER NEARBY TREES THAT MAY BE AFFECTED BY THE NEW CONSTRUCTION PROTECT EXIST. TREES PROVIDE 10'-12' BARRIES AROUND TREES TO REMAIN WITH A TEMPORARY PLYWD. PARTITIONS OR SAFETY MESH
ALL DAMAGED PLANT MATERIAL INCLUDING SOD MUST BE RESTORED PRIOR TO FINAL BUILDING INSPECTION.
ALL OTHER EXISTING SHRUBS & HEDGES INCLUDING SOD TO REMAIN AS IS.

DESIGN CRITERIA

CODE EDITION: 2020-7th EDITION FLORIDA BUILDING CODE
AS PER CODE REFERENCE STANDARDS CHAPTER 35
CODE REFERENCES: ASCE/SEI 7-16, ACI 318-14, NDS 2018,AWC AF & PA-92, ASTM A615, ASTM D-698, & AITC, AISI S100-16,
MECHANICAL 2020-7th EDITION FLORIDA BUILDING CODE
ELECTRICAL 2020-7th EDITION FLORIDA BUILDING CODE
PLUMBING 2020-7th EDITION FLORIDA BUILDING CODE
NATIONAL ELECTRIC CODE (NEC 2017)
EXISTING BUILDINGS 2020-7th EDITION FLORIDA BUILDING CODE
FLORIDA FIRE PREVENTION CODE 2020 7th Edition
FLORIDA ACCESSIBILITY CODE 2020 7th Edition
ASCE/SEI 7-16 EXPOSURE CONDITION INDICATED=C
CONSTRUCTION TYPE VB UNPROTECTED
OCCUPANCY CLASSIFICATION R-3
ALTERATION LEVEL-3

I CERTIFY THIS IS BEING DESIGNED TO WITHSTAND 175 MPH WIND SPEED ACCORDING TO ASCE 7-16 AS REQUIRED BY THE FLORIDA BUILDING CODE REVISED 2020 EDITION 7th EDITION

ZONING LEGEND

ZONING CLASSIFICATION	SINGLE FAMILY RESIDENTIAL (RS-1C) DISTRICT
TOTAL GROSS LOT AREA:	12500 SQFT.
NET LOT AREA :	7500 SQFT.
LOT COVERAGE REQUIRED:	35%
LOT COVERAGE PROVIDED	32%
other conc. impervious areas 850 S.F. GREEN AREA TO REMAIN 4215 51%	
EXIST. BUILD'G. FT. PRINT	1,718 SQFT.
NEW ADDITIONAL S.F.	+ 189 SQFT.
EXIST. BEING REMOVED/REMODELED	- 404 SQFT.
TOTAL NEW UNDER A/C AREA S.F.	1,901 SQFT. A/C
NEW OPEN TERRACE S.F.	+ 461 SQFT.
(NEW TOTAL FT. PRINT S.F.)=	2,374 SQFT.
3 PARKING SPACES REQUIRED. EXIST. CONC. DRIVEWAY FOR 4 CARS AT FRONT YARD.	
SETBACKS REQUIRED:	
FRONT	30.00'
INTERIOR SIDE	7.50'
STREET SIDE	15.00'
REAR	25.00'
BETWEEN BUILDINGS	20.00'
SETBACKS PROVIDED:	
FRONT	15.09' EXIST. CONDITION APPV'D.
INTERIOR SIDE	7.67' PROPOSED
STREET SIDE	35.36' EXIST. CONDITION APPV'D.
REAR	13.86' MATCH EXIST. CONDITION APPV'D.
BETWEEN BUILDINGS	N/A

INDEX OF DRAWINGS

SP-1/D-1 SITE PLAN AND EXIST. & DEMO FLOOR PLAN
A-1 PROPOSED FLOOR PLANS, SCHED. & DETS.
A-2 FOUNDATIONS & STRUCTURAL SECTIONS/DETAILS
A-3 WINDOW SCHEDULES & DETAILS
A-4 PROPOSED ELEVATIONS
A-5 ROOF PLAN & STRUCTURAL DETAILS
A-6 ROOF DIAGRAM & OTHER DETAILS, NOTES.
M-1 MECHANICAL SHEET AND SCHEDULES, DETAILS
E-1 ELECTRICAL SHEET AND SCHEDULES, RISERS
P-1 PLUMBING SHEET AND DETAILS.
P-2 PLUMBING SHEET AND DETAILS.

OFFICE COPY
CITY OF MIAMI SPRINGS

SEPARATE PERMIT REQUIRED FOR ROOFING, PLUMBING ELECTRICAL, MECHANICAL, SHUTTERS, WINDOWS, DOORS AND DRIVEWAYS

CITY OF MIAMI SPRINGS APPROVED FOR PERMIT ONLY

PROJECT NAME: ADDITION TO RESIDENCE FOR:
OWNER/PH: AMBAR PREVAL 786-587-7391
ADDRESS:200 N. ESPLANADE DRIVE MIAMI SPRINGS, FLORIDA 33166
PROJECT ADD: SAME

NO.	DATE
1	
2	
3	
4	

DESG	DRWN	CHKD	APPV	DATE

Guillermo Ramon Gonzalez
9000 SW. 168th Avenue Miami Florida 33196
Registered Architect #13960
Ph:305-484-8171
Ph:786-237-5154 (assistant)

STATE OF FLORIDA
GUILLERMO RAMON GONZALEZ
No. AR0013960
REGISTERED ARCHITECT
Guillermo Ramon Gonzalez
R.A. 13960
STATE OF FLORIDA

101521

SP-1
D-1

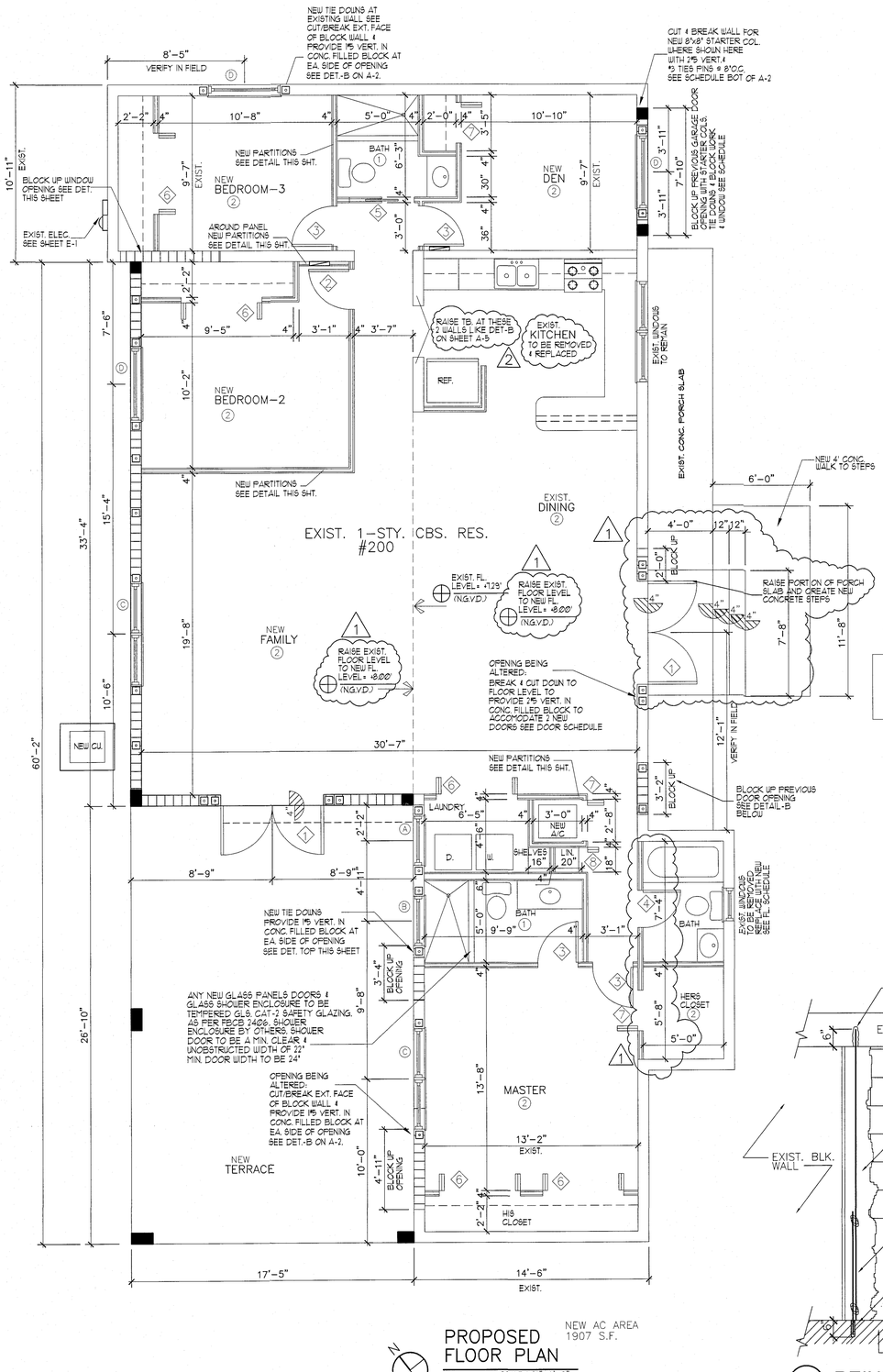

PROPOSED FLOOR PLAN

SCALE:1/4"=1'-0"

WALL LEGEND

- EXIST. 8"BLOCK WALL TO REMAIN
- NEW 4" OR 8"PARTITION (2x4 WOOD STUDS) OR (26ga METAL CHANNELS) SEE FL.PL.
- EXIST. 4"PARTITION TO BE REMOVED OR CONC. BLK. WALL TO BE REMOVED
- NEW 8" CONC.BLOCK WALL SEE FL.PL.

FOR INTRUSSION NOTES SEE SHEET A-6

NOTE: THERE IS NO LEGALIZATION BEING DONE HERE. EXISTING REAR ADDITION IS BEING REMOVED (SEE D-1) ALSO EXISTING GARAGE AT LEFT FRONT OF RESIDENCE BEING CONVERTED TO LIVING AREA.

THE MODE OF OPERATION SHALL NOT REQUIRE A KEY, TOOL SPECIAL KNOWLEDGE OR EFFORT TO MAKE AVAILABLE THE REQUIRED CLEAR OPENING AND NO PART OF THE OPERATING MECHANISM SHALL BE PLACED HIGHER THAN 54" A.F.F. SIMILAR SPECS APPLY TO ROLLING WINDOW INSTALLATIONS. BELOW DETAIL REQUIREMENTS ALSO APPLIES TO CASEMENT OR SINGLE HUNG WINDOWS

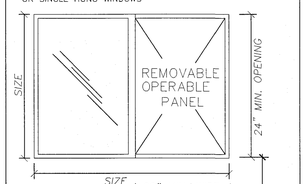

(MIN. AREA 5.7 S.F.)

DETAIL OF EGRESS WINDOW

SCALE:3/4"= 1'-0"

BATHS ONLY IF APPLICABLE

NOTE: USE THE FOLLOWING ASSEMBLY AROUND BATH TUB AND SHOWERS.

1/2" "DUROCK" CEMENT BOARD FULL HEIGHT AT SHOWER TILE WALL AREAS

USE TILE @ BASE AND FLOOR

SEE NOTES AT BOTTOM OF ROOM FINISH SCHEDULE BELOW FOR WET WALL CONDITIONS

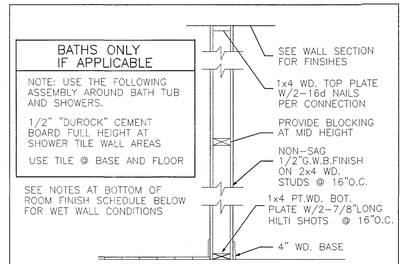

INTERIOR PARTITION DETAIL

SCALE:3/4"= 1'-0"

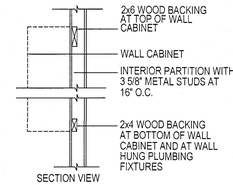

SECTION VIEW

WOOD BACKING DETAIL

SCALE:N.T.S.

- STEEL STUDS SHALL BE A MIN. OF 20 GA. AT WALL HUNG FIXTURE LOCATIONS TO COMPLY W/ 2510.5.1.1 F.B.C. & W/ 2318.1.15 F.B.C.

- A MINIMUM 2x4 HORIZONTAL WOOD MEMBER SECURELY FASTENED TO NOT LESS THAN 2 SUCH STUDS, SHALL BE INSTALLED FOR THE ATTACHMENT OF EACH WALL HUNG PLUMBING FIXTURE, WALL CABINET AND TO ALLOW FUTURE INSTALLATION OF GRAB BARS BEHIND TOILET AND TUB SIDES.

NOTE: WALL HUNG PLUMBING FIXTURES /CABINETS: STEEL STUD FRAMING SUPPORTING WALLS HUNG PLUMBING FIXTURES OR CABINETS SHALL BE DOUBLED PER R4411.4.5.1 & SHALL HAVE A HORZ. MEMBER SECURED TO NOT LESS THAN TWO STUDS AS PER R4411.4.51.3 FBC.

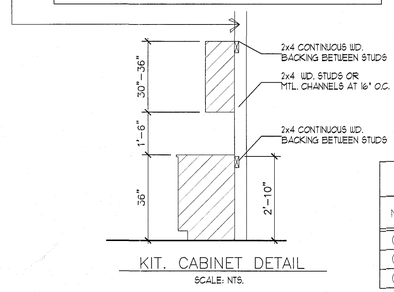

KIT. CABINET DETAIL

SCALE: NTS.

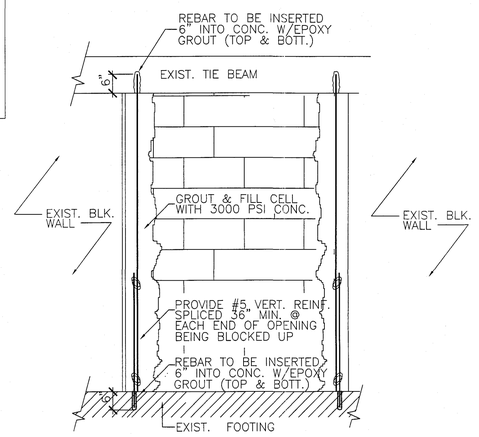

(B) REINF. BLOCK UP DETAIL

SCALE: 3/4" = 1'-0"

ROOM FINISH SCHEDULE

NO.	ROOM NAME	FLOOR	BASE	WALL	CEILING MAT.	CEILING HT.	REMARKS
1	BATHS	TILE	TILE	TILE	O.B. PAINT	8'-2"	FLOOR & BASE IMPERVIOUS
2	ANY OTHER LIVING AREA	TILE	TILE	G.W.B.	W.B. PAINT	8'-2"	
3							

NOTE: OWNER/G.C. TO VERIFY ALL NEW & EXIST. WINDOWS/DOOR SIZES TO BE REMOVED & REPLACED.

DOOR SCHEDULE

GLASS PANELS IN ANY DOORS TO BE TEMPERED GLS. CAT-2 SAFETY GLAZING TO COMPLY WITH 3508.3(D)(3) & 2411.3.1.3 & 2405.2.1 (1) & (2) "FBC"

MARK	TYPE	SIZE W	SIZE H	SIZE T	DESCRIPTION	MATERIAL	FRAME	REMARKS
1		(2)-36"	6'-8"	1 3/8"	FRENCH DOORS	METAL	METAL	ALUM. & GLS. FRENCH DOORS TEMPERED GLS. CAT-2 SEE N.O.A. & PRODUCT APPROVAL IMPACT RESISTANT FRONT DOOR TO BE FROSTED SMOKED/FROST DOOR WITH THRESHOLD
2		32"	6'-8"	1 3/8"	HOLLOW CORE SWING DOOR	WOOD	WOOD	
3		30"	6'-8"	1 3/8"	HOLLOW CORE SWING DOOR	WOOD	WOOD	
4		24"	6'-8"	1 3/8"	HOLLOW CORE SWING DOOR	WOOD	WOOD	
5		30"	6'-8"	1"	POCKET DOOR	WOOD	WOOD	
6		2-30"	6'-8"	1"	BI-FOLD LOUVERED	WOOD	WOOD	LOUVERED (OPTIONAL)
7		30"	6'-8"	1"	BI-FOLD LOUVERED	WOOD	WOOD	LOUVERED (OPTIONAL)
8		18"	6'-8"	1"	BI-FOLD LOUVERED	WOOD	WOOD	LOUVERED (OPTIONAL) OR SWING DOOR
9								

ALL NEW EXTERIOR DOORS TO BE IMPACT RESISTANT
EVERY CLOSET DOOR LATH SHALL BE SUCH THAT CHILDEN CAN OPEN FROM INSIDE CLOSET
EVERY BATHROOM DOOR SHALL PERMIT THE OPENING OF THE LOCKED DOOR FROM THE OUTSIDE IN AN EMERGENCY. AS PER FBC 420.3.11.2

2 GLS. DRS. U VALUE 1.20 GLS. DRS. shgc U VALUE 0.45

CITY OF MIAMI SPRINGS BUILDING DEPARTMENT
APR 12 2022
REWORK
RECEIVED

CITY OF MIAMI SPRINGS
APPROVED
FOR PERMIT ONLY
BUILDING INSPECTOR
PLUMBING INSPECTOR
ELECTRICAL INSPECTOR
MECHANICAL INSPECTOR
ZONING
STRUCTURAL

FLAME SPREAD INDEX NOTES:

MATERIAL INTERIOR FINISH: NOTE: GROUP R-3 CLASS-C
NOTE: ANY NEW WALL AND CEILING FINISHES INSTALLED, TO HAVE A FLAME SPREAD INDEX 76-200, AND A SMOKE DEVELOPED INDEX OF 0-450 AS PER F.B.C. '17 803.1.1 INTERIOR WALLS & CEILING MATERIALS

NOTE: IF ANY NEW DECORATIVE OR TRIM MATERIALS ARE INSTALLED, THEN TO HAVE A MIN. OF CLASS C FLAME SPREAD INDEX AS ABOVE ALL NEW TILE FLOORING IN BATHROOMS TO COMPLY WITH 804.1 TO 804.4.2 & IN ACCORDANCE NFPA 253 CHAPTER 8 INTERIOR FINISHES

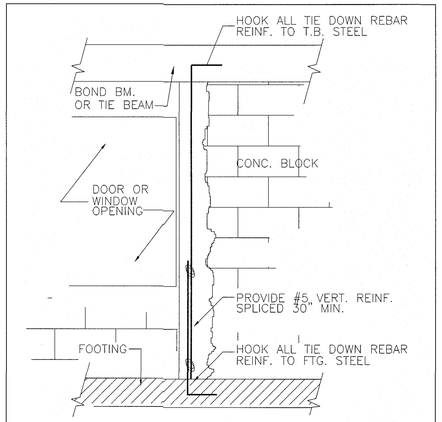

TIE DOWN/COLUMN SPLICE DETAIL (TYPICAL)

AT NEW WALLS SCALE: 3/4" = 1'-0"

I CERTIFY THIS ADDITION TO BE DESIGNED TO WITHSTAND 175 MPH WIND SPEED ACCORDING TO ASCE 7-10 AS REQUIRED BY THE FLORIDA BUILDING CODE REVISED 2020-7th EDITION

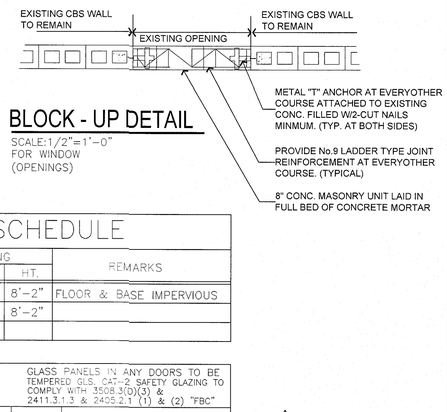

BLOCK - UP DETAIL

SCALE:1/2"=1'-0" FOR WINDOW (OPENINGS)

NO.	DATE	DESC	DRWN	CHKD	APPRV	DATE
1	1-14-22 REVISED TO RAISE EXIST FL. LEVEL TO 8.0					
2	3-23-22 REVISED TO COMPLY WITH CITY COMMENTS					

PROJECT NAME: ADDITION TO RESIDENCE FOR:
OWNER/PH: AMBAR PREVAL 786-587-7391
ADDRESS:200 N. ESPLANADE DRIVE MIAMI SPRINGS, FLORIDA 33166
PROJECT ADD: SAME

Guillermo Ramon Gonzalez
9000 SW. 168th Avenue Miami Florida 33196 Ph:305-484-8171
Registered Architect #13960 Ph:786-237-5154 (assistant)

101521

A-1

Guillermo Ramon Gonzalez
R.A. 13960
STATE OF FLORIDA

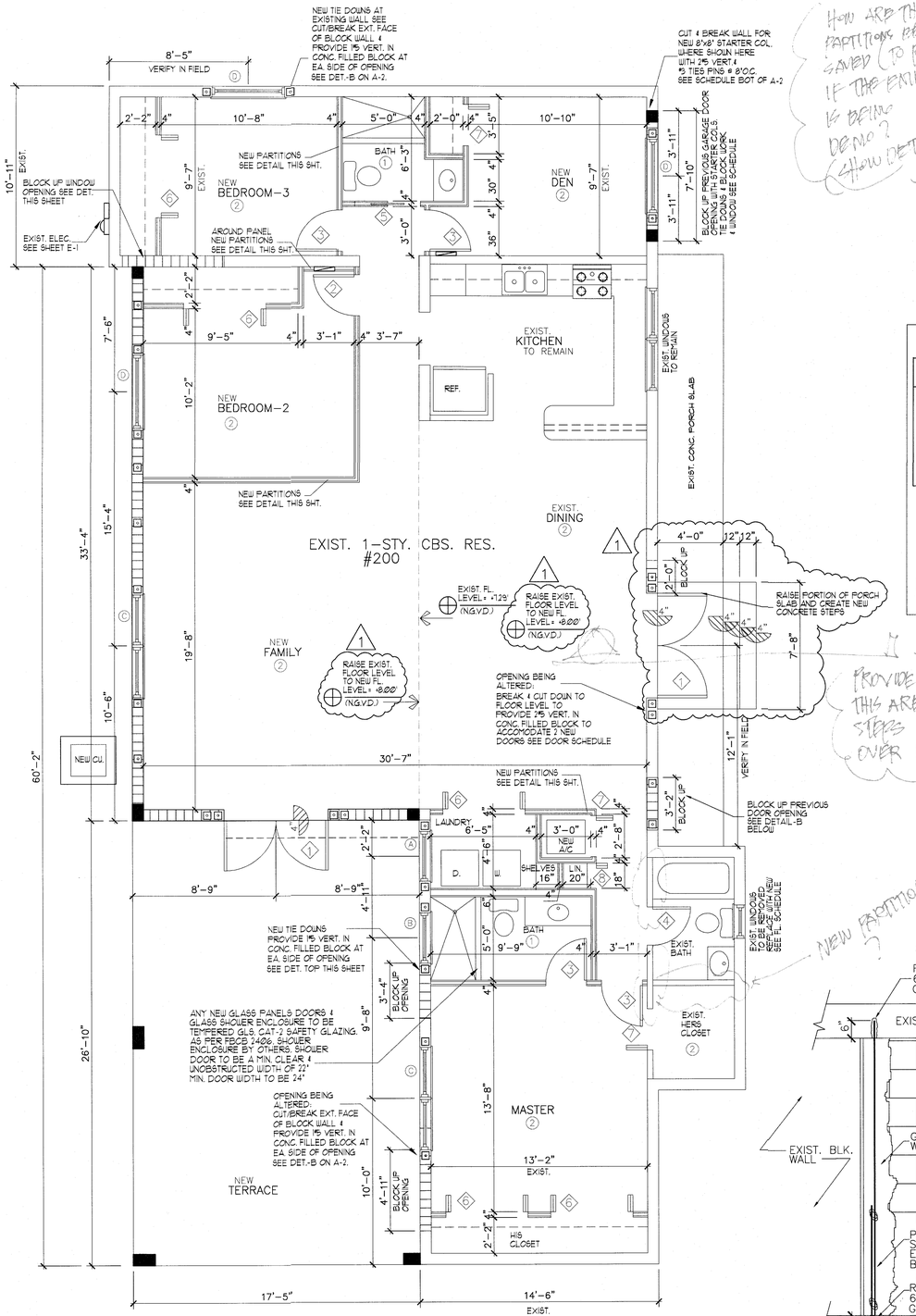

PROPOSED FLOOR PLAN

SCALE:1/4"=1'-0"

How are these partitions being saved (to remain) if the entire roof is being demo? Show detail

Provide section thru this area to show conc. steps and new header over new door.

Note: Provide detail to show how existing conc. headers are being addressed.

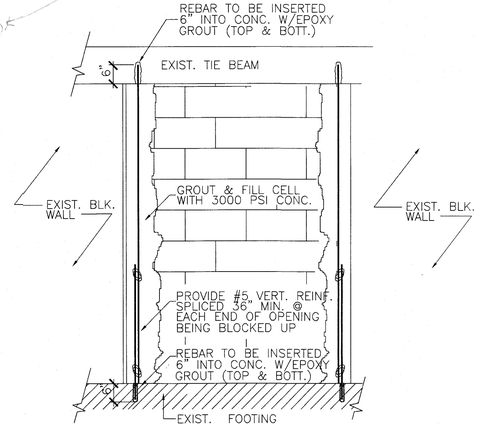

(B) REINF. BLOCK UP DETAIL

SCALE: 3/4" = 1'-0"

WALL LEGEND

- EXIST. 8"BLOCK WALL TO REMAIN
- NEW 4" OR 8"PARTITION SEE FL.PL. (2x4 WOOD STUDS) OR (25ga VERT. CHANNELS)
- EXIST.4"PARTITION TO REMAIN
- EXIST. 4"PARTITION TO BE REMOVED OR CONC. BLK. WALL TO BE REMOVED
- NEW 8" CONC.BLOCK WALL SEE FL.PL.

FOR INTRUSSION NOTES SEE SHEET A-6

NOTE: THERE IS NO LEGALIZATION BEING DONE HERE. EXISTING REAR ADDITION IS BEING REMOVED (SEE D-1) ALSO EXISTING GARAGE AT LEFT FRONT OF RESIDENCE BEING CONVERTED TO LIVING AREA.

INTERIOR PARTITION DETAIL

SCALE:3/4"= 1'-0"

BATHS ONLY IF APPLICABLE

NOTE: USE THE FOLLOWING ASSEMBLY AROUND BATH TUB AND SHOWERS.

1/2" "DUROCK" CEMENT BOARD FULL HEIGHT AT SHOWER TILE WALL AREAS

USE TILE @ BASE AND FLOOR

SEE NOTES AT BOTTOM OF ROOM FINISH SCHEDULE BELOW FOR WET WALL CONDITIONS

- SEE WALL SECTION FOR FINSIHES
- 1x4 WD. TOP PLATE W/2-16d NAILS PER CONNECTION
- PROVIDE BLOCKING AT MID HEIGHT
- NON-SAG 1/2"G.W.B.FINISH ON 2x4 WD. STUDS @ 16"O.C.
- 1x4 PT.WD. BOT. PLATE W/2-7/8"LONG HILTI SHOTS @ 16"O.C.
- 4" WD. BASE

THE MODE OF OPERATION SHALL NOT REQUIRE A KEY, TOOL SPECIAL KNOWLEDGE OR EFFORT TO MAKE AVAILABLE THE REQUIRED CLEAR OPENING AND NO PART OF THE OPERATING MECHANISM SHALL BE PLACED HIGHER THAN 54" A.F.F. SIMILAR SPECS APPLY TO ROLLING WINDOW INSTALLATIONS. BELOW DETAIL REQUIREMENTS ALSO APPLIES TO CASEMENT OR SINGLE HUNG WINDOWS

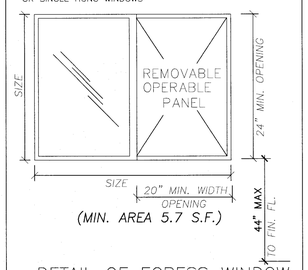

DETAIL OF EGRESS WINDOW

SCALE:3/4"= 1'-0"

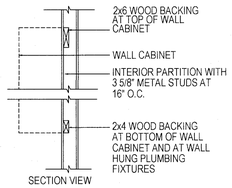

WOOD BACKING DETAIL

SCALE:N.T.S.

- STEEL STUDS SHALL BE A MIN. OF 20 GA. AT WALL HUNG FIXTURE LOCATIONS TO COMPLY W/ 2510.5.1.1 F.B.C. & W/ 2318.1.15 F.B.C.
- A MINIMUM 2x4 HORIZONTAL WOOD MEMBER SECURELY FASTENED TO NOT LESS THAN 2 SUCH STUDS, SHALL BE INSTALLED FOR THE ATTACHMENT OF EACH WALL HUNG PLUMBING FIXTURE, WALL CABINET AND TO ALLOW FUTURE INSTALLATION OF GRAB BARS BEHIND TOILET AND TUB SIDES.

FLAME SPREAD INDEX NOTES:

MATERIAL INTERIOR FINISH: NOTE: GROUP R-3 CLASS-C
NOTE: ANY NEW WALL AND CEILING FINISHES INSTALLED, TO HAVE A FLAME SPREAD INDEX 76-200, AND A SMOKE DEVELOPED INDEX OF 0-450 AS PER F.B.C. '17 803.1.1 INTERIOR WALLS & CEILING MATERIALS

NOTE: IF ANY NEW DECORATIVE OR TRIM MATERIALS ARE INSTALLED, THEN TO HAVE A MIN. OF CLASS C FLAME SPREAD INDEX AS ABOVE ALL NEW TILE FLOORING IN BATHROOMS TO COMPLY WITH 804.1 TO 804.4.2 & IN ACCORDANCE NFPA 253 CHAPTER 8 INTERIOR FINISHES

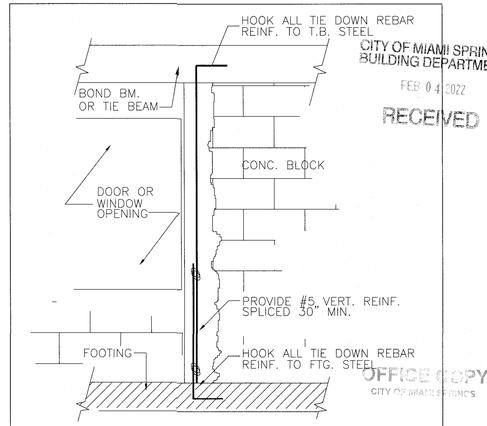

TIE DOWN/COLUMN SPLICE DETAIL (TYPICAL) AT NEW WALLS

SCALE: 3/4" = 1'-0"

CITY OF MIAMI SPRINGS BUILDING DEPARTMENT
FEB 04 2022
RECEIVED

I CERTIFY THIS ADDITION TO BE DESIGNED TO WITHSTAND 175 MPH WIND SPEED ACCORDING TO ASCE 7-10 AS REQUIRED BY THE FLORIDA BUILDING CODE REVISED 2020-7th EDITION

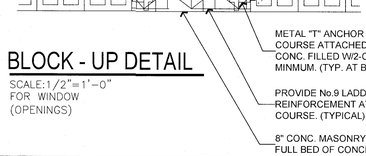

BLOCK - UP DETAIL

SCALE:1/2"=1'-0" FOR WINDOW (OPENINGS)

ROOM FINISH SCHEDULE

NO.	ROOM NAME	FLOOR	BASE	WALL	CEILING MAT.	CEILING HT.	REMARKS
1	BATHS	TILE	TILE	TILE	O.B. PAINT	8'-2"	FLOOR & BASE IMPERVIOUS
2	ANY OTHER LIVING AREA	TILE	TILE	G.W.B.	W.B. PAINT	8'-2"	
3							

NOTE: OWNER/G.C. TO VERIFY ALL NEW & EXIST. WINDOWS/DOOR SIZES TO BE REMOVED & REPLACED

DOOR SCHEDULE

GLASS PANELS IN ANY DOORS TO BE TEMPERED GLS. CAT-2 SAFETY GLAZING TO COMPLY WITH 3508.3(D)(3) & 2411.3.1.3 & 2405.2.1 (1) & (2) "FBC"

MARK	TYPE	SIZE W	SIZE H	SIZE T	DESCRIPTION	MATERIAL	FRAME	REMARKS
1		(2)-36"	6'-8"	1 3/8"	FRENCH DOORS	METAL	METAL	ALUM. & GLS. FRENCH DOORS TEMPERED GLS. CAT-2 SEE N.O.A. & PRODUCT APPROVAL IMPACT RESISTANT FRONT DOOR TO BE FROSTED SMOKED/FROST DOOR WITH THRESHOLD
2		32"	6'-8"	1 3/8"	HOLLOW CORE SWING DOOR	WOOD		
3		30"	6'-8"	1 3/8"	HOLLOW CORE SWING DOOR	WOOD	WOOD	
4		24"	6'-8"	1 3/8"	HOLLOW CORE SWING DOOR	WOOD	WOOD	
5		30"	6'-8"	1"	POCKET DOOR	WOOD	WOOD	
6		2-30"	6'-8"	1"	BI-FOLD LOUVERED	WOOD	WOOD	LOUVERED (OPTIONAL)
7		30"	6'-8"	1"	BI-FOLD LOUVERED	WOOD	WOOD	LOUVERED (OPTIONAL)
8		18"	6'-8"	1"	BI-FOLD LOUVERED	WOOD	WOOD	LOUVERED (OPTIONAL) OR SWING DOOR
9								

ALL NEW EXTERIOR DOORS TO BE IMPACT RESISTANT
EVERY CLOSET DOOR LATH SHALL BE SUCH THAT CHILDEN CAN OPEN FROM INSIDE CLOSET.
EVERY BATHROOM DOOR SHALL PERMIT THE OPENING OF THE LOCKED DOOR FROM THE OUTSIDE IN AN EMERGENCY. AS PER FBC 420.3.11.2

REWORK

CITY OF MIAMI SPRINGS APPROVED FOR PERMIT ONLY

CITY OF MIAMI SPRINGS

SHGC & U-FACTOR VALUES MISSING FOR GLASS DOORS.

OFFICE COPY
CITY OF MIAMI SPRINGS

PROJECT NAME: ADDITION TO RESIDENCE FOR:
OWNER/PH: AMBAR PREVAL 786-587-7391
ADDRESS:200 N. ESPLANADE DRIVE MIAMI SPRINGS, FLORIDA 33166
PROJECT ADD: SAME

NO.	DATE	DESC	DRWN	CHKD	APRV	DATE
1	1-14-22 REVISED TO RAISE EXIST. FL. LEVEL TO 8.0					

Guillermo Ramon Gonzalez
9000 SW. 168th Avenue Miami Florida 33196 Ph:305-484-8171
Registered Architect #13960 Ph:786-237-5154 (assistant)

STATE OF FLORIDA
GUILLERMO RAMON GONZALEZ
AR0013960
REGISTERED ARCHITECT

Guillermo Ramon Gonzalez
R.A. 13960
STATE OF FLORIDA

101521

A-1

PROPERTY APPRAISER OF MIAMI-DADE COUNTY

Detailed Report

Generated On: 02/17/2025

PROPERTY INFORMATION	
Folio	05-3118-016-1590
Property Address	200 N ESPLANADE DR MIAMI SPRINGS, FL 33166-4412
Owner	JOVANY JIMENEZ , AMBAR SARA PREVAL
Mailing Address	3145 NW 32 ST MIAMI, FL 33142
Primary Zone	0400 SGL FAMILY - 901-1200 SQF
Primary Land Use	0101 RESIDENTIAL - SINGLE FAMILY : 1 UNIT
Beds / Baths /Half	2 / 1 / 0
Floors	1
Living Units	1
Actual Area	1,867 Sq.Ft
Living Area	1,533 Sq.Ft
Adjusted Area	1,495 Sq.Ft
Lot Size	7,500 Sq.Ft
Year Built	Multiple (See Building Info.)



ASSESSMENT INFORMATION			
Year	**2024**	**2023**	**2022**
Land Value	$360,000	$281,250	$225,000
Building Value	$134,628	$160,587	$144,899
Extra Feature Value	$2,359	$2,388	$2,418
Market Value	$496,987	$444,225	$372,317
Assessed Value	$457,551	$444,225	$372,317

BENEFITS INFORMATION				
Benefit	**Type**	**2024**	**2023**	**2022**
Save Our Homes Cap	Assessment Reduction	$39,436		
Homestead	Exemption	$25,000	$25,000	
Second Homestead	Exemption	$25,000	$25,000	

Note: Not all benefits are applicable to all Taxable Values (i.e. County, School Board, City, Regional).

TAXABLE VALUE INFORMATION			
Year	**2024**	**2023**	**2022**
COUNTY			
Exemption Value	$50,000	$50,000	$0
Taxable Value	$407,551	$394,225	$372,317
SCHOOL BOARD			
Exemption Value	$25,000	$25,000	$0
Taxable Value	$432,551	$419,225	$372,317
CITY			
Exemption Value	$50,000	$50,000	$0
Taxable Value	$407,551	$394,225	$372,317
REGIONAL			
Exemption Value	$50,000	$50,000	$0
Taxable Value	$407,551	$394,225	$372,317

The Property Appraiser is continually editing and updating the tax roll. This website may not reflect the most current information on record. The Property Appraiser and Miami-Dade County assumes no liability, see full disclaimer and User Agreement at http://www.miamidade.gov/info/disclaimer.asp

PROPERTY APPRAISER OF MIAMI-DADE COUNTY

Generated On: 02/17/2025

Property Information

Folio: 05-3118-016-1590
Property Address: 200 N ESPLANADE DR

Roll Year **2024** Land, Building and Extra-Feature Details

LAND INFORMATION

Land Use	Muni Zone	PA Zone	Unit Type	Units	Calc Value
GENERAL	R-1C	0400	Square Ft.	7,500.00	$360,000

BUILDING INFORMATION

Building Number	Sub Area	Year Built	Actual Sq.Ft.	Living Sq.Ft.	Adj Sq.Ft.	Calc Value
1	3	2017	378	378	252	$32,453
1	2	1955	165	165	110	$9,042
1	1	1947	1,324	990	1,133	$93,133

EXTRA FEATURES

Description	Year Built	Units	Calc Value
Wood Fence	1997	135	$1,642
Wall - CBS unreinforced	1997	75	$228
Patio - Concrete Slab	2017	130	$489

The Property Appraiser is continually editing and updating the tax roll. This website may not reflect the most current information on record. The Property Appraiser and Miami-Dade County assumes no liability, see full disclaimer and User Agreement at http://www.miamidade.gov/info/disclaimer.asp

PROPERTY APPRAISER OF MIAMI-DADE COUNTY

Generated On: 02/17/2025

Property Information

Folio: 05-3118-016-1590
Property Address: 200 N ESPLANADE DR

Roll Year **2023** Land, Building and Extra-Feature Details

LAND INFORMATION

Land Use	Muni Zone	PA Zone	Unit Type	Units	Calc Value
GENERAL	R-1C	0400	Square Ft.	7,500.00	$281,250

BUILDING INFORMATION

Building Number	Sub Area	Year Built	Actual Sq.Ft.	Living Sq.Ft.	Adj Sq.Ft.	Calc Value
1	3	2017	378	378	252	$39,022
1	2	1955	165	165	110	$10,758
1	1	1947	1,324	990	1,133	$110,807

EXTRA FEATURES

Description	Year Built	Units	Calc Value
Wood Fence	1997	135	$1,663
Wall - CBS unreinforced	1997	75	$231
Patio - Concrete Slab	2017	130	$494

The Property Appraiser is continually editing and updating the tax roll. This website may not reflect the most current information on record. The Property Appraiser and Miami-Dade County assumes no liability, see full disclaimer and User Agreement at http://www.miamidade.gov/info/disclaimer.asp

PROPERTY APPRAISER OF MIAMI-DADE COUNTY

Generated On: 02/17/2025

Property Information

Folio: 05-3118-016-1590
Property Address: 200 N ESPLANADE DR

Roll Year **2022** Land, Building and Extra-Feature Details

LAND INFORMATION

Land Use	Muni Zone	PA Zone	Unit Type	Units	Calc Value
GENERAL	R-1C	0400	Square Ft.	7,500.00	$225,000

BUILDING INFORMATION

Building Number	Sub Area	Year Built	Actual Sq.Ft.	Living Sq.Ft.	Adj Sq.Ft.	Calc Value
1	3	2017	378	378	252	$35,490
1	2	1955	165	165	110	$9,682
1	1	1947	1,324	990	1,133	$99,727

EXTRA FEATURES

Description	Year Built	Units	Calc Value
Wood Fence	1997	135	$1,685
Wall - CBS unreinforced	1997	75	$234
Patio - Concrete Slab	2017	130	$499

The Property Appraiser is continually editing and updating the tax roll. This website may not reflect the most current information on record. The Property Appraiser and Miami-Dade County assumes no liability, see full disclaimer and User Agreement at http://www.miamidade.gov/info/disclaimer.asp

PROPERTY APPRAISER OF MIAMI-DADE COUNTY

Generated On: 02/17/2025

Property Information

Folio: 05-3118-016-1590
Property Address: 200 N ESPLANADE DR

FULL LEGAL DESCRIPTION
CINEMA PARK-COUNTRY CLUB ESTS
ADDN
PB 17-2
SELY 1/2 LOTS 1 & 2 BLK 58
LOT SIZE 100.000 X 75
OR 13114-2660 1286 1

SALES INFORMATION

Previous Sale	Price	OR Book-Page	Qualification Description
08/02/2021	$410,000	32687-0704	Qual by exam of deed
09/18/2020	$100	32182-3861	Corrective, tax or QCD; min consideration
06/18/2020	$100	31992-2776	Trustees in bankruptcy, executors or guardians
12/01/1986	$60,000	13114-2660	Sales which are qualified
02/01/1985	$68,500	12431-2385	Sales which are qualified

The Property Appraiser is continually editing and updating the tax roll. This website may not reflect the most current information on record. The Property Appraiser and Miami-Dade County assumes no liability, see full disclaimer and User Agreement at http://www.miamidade.gov/info/disclaimer.asp

PROPERTY APPRAISER OF MIAMI-DADE COUNTY

Building Sketch Viewer

Folio:	05-3118-016-1590	Actual Area:	1,867 Sq. Ft.
Address:	200 N ESPLANADE DR	Living Area:	1,533 Sq. Ft.
Owner:	JOVANY JIMENEZ	Adjusted Area:	1,495 Sq. Ft.
	AMBAR SARA PREVAL		

Building Number: 1 **of 1** Roll Year: 2024 Previous Next

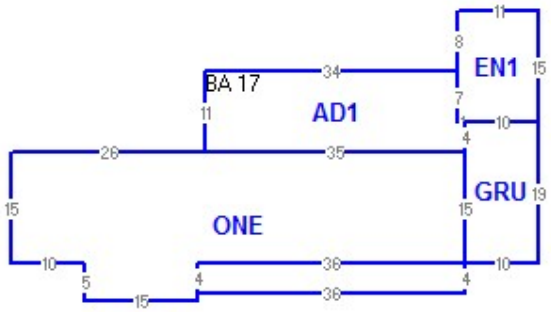

- ONE : One Story
- EN1 : Enclosure w/o Plumbing
- GRU : Garage, Unfinished
- PFL : Porch, Flat
- AD1 : Building Addition w/o Plumbing

Click here to see all Sketch SubArea Descriptions

Generated on: 2/17/2025

Disclaimer:
The Office of the Property Appraiser is continually editing and updating the tax roll. This website may not reflect the most current information on record. The Property Appraiser and Miami-Dade County assume no liability. See full Liability Disclaimer and User Agreement. See full disclaimer and User Agreement at http://www.miamidade.gov/info/disclaimer.asp

PROPERTY APPRAISER OF MIAMI-DADE COUNTY

Detailed Report

Generated On: 02/17/2025

PROPERTY INFORMATION	
Folio	05-3118-016-1591
Property Address	300 FALCON AVE MIAMI SPRINGS, FL 33166-4414
Owner	MICHELLE N FERREIRA TRS , MICHELLE N FERREIRA REVOCABLE TR
Mailing Address	300 FALCON AVE MIAMI SPRINGS, FL 33166
Primary Zone	0400 SGL FAMILY - 901-1200 SQF
Primary Land Use	0101 RESIDENTIAL - SINGLE FAMILY : 1 UNIT
Beds / Baths /Half	3 / 2 / 0
Floors	1
Living Units	1
Actual Area	2,700 Sq.Ft
Living Area	1,917 Sq.Ft
Adjusted Area	2,308 Sq.Ft
Lot Size	7,500 Sq.Ft
Year Built	1985



ASSESSMENT INFORMATION			
Year	**2024**	**2023**	**2022**
Land Value	$360,000	$281,250	$225,000
Building Value	$208,689	$250,176	$252,057
Extra Feature Value	$12,890	$13,054	$13,218
Market Value	$581,579	$544,480	$490,275
Assessed Value	$309,917	$300,891	$292,128

BENEFITS INFORMATION				
Benefit	**Type**	**2024**	**2023**	**2022**
Save Our Homes Cap	Assessment Reduction	$271,662	$243,589	$198,147
Homestead	Exemption	$25,000	$25,000	$25,000
Second Homestead	Exemption	$25,000	$25,000	$25,000

Note: Not all benefits are applicable to all Taxable Values (i.e. County, School Board, City, Regional).

TAXABLE VALUE INFORMATION			
Year	**2024**	**2023**	**2022**
COUNTY			
Exemption Value	$50,000	$50,000	$50,000
Taxable Value	$259,917	$250,891	$242,128
SCHOOL BOARD			
Exemption Value	$25,000	$25,000	$25,000
Taxable Value	$284,917	$275,891	$267,128
CITY			
Exemption Value	$50,000	$50,000	$50,000
Taxable Value	$259,917	$250,891	$242,128
REGIONAL			
Exemption Value	$50,000	$50,000	$50,000
Taxable Value	$259,917	$250,891	$242,128

The Property Appraiser is continually editing and updating the tax roll. This website may not reflect the most current information on record. The Property Appraiser and Miami-Dade County assumes no liability, see full disclaimer and User Agreement at http://www.miamidade.gov/info/disclaimer.asp

PROPERTY APPRAISER OF MIAMI-DADE COUNTY

Generated On: 02/17/2025

Property Information

Folio: 05-3118-016-1591
Property Address: 300 FALCON AVE

Roll Year **2024** Land, Building and Extra-Feature Details

LAND INFORMATION

Land Use	Muni Zone	PA Zone	Unit Type	Units	Calc Value
GENERAL	R-1C	0400	Square Ft.	7,500.00	$360,000

BUILDING INFORMATION

Building Number	Sub Area	Year Built	Actual Sq.Ft.	Living Sq.Ft.	Adj Sq.Ft.	Calc Value
1	1	1985	2,700	1,917	2,308	$208,689

EXTRA FEATURES

Description	Year Built	Units	Calc Value
Wood Fence	1985	211	$2,161
Pool COMM AVG 3-6' dpth, plain feat 15x30 av size	1985	200	$4,480
Patio - Concrete Slab w/Roof Aluminum or Fiber	1997	342	$2,278
Patio - Brick, Tile, Flagstone	1985	547	$3,971

The Property Appraiser is continually editing and updating the tax roll. This website may not reflect the most current information on record. The Property Appraiser and Miami-Dade County assumes no liability, see full disclaimer and User Agreement at http://www.miamidade.gov/info/disclaimer.asp

PROPERTY APPRAISER OF MIAMI-DADE COUNTY

Generated On: 02/17/2025

Property Information

Folio: 05-3118-016-1591
Property Address: 300 FALCON AVE

Roll Year **2023** Land, Building and Extra-Feature Details

LAND INFORMATION

Land Use	Muni Zone	PA Zone	Unit Type	Units	Calc Value
GENERAL	R-1C	0400	Square Ft.	7,500.00	$281,250

BUILDING INFORMATION

Building Number	Sub Area	Year Built	Actual Sq.Ft.	Living Sq.Ft.	Adj Sq.Ft.	Calc Value
1	1	1985	2,700	1,917	2,308	$250,176

EXTRA FEATURES

Description	Year Built	Units	Calc Value
Wood Fence	1985	211	$2,194
Pool COMM AVG 3-6' dpth, plain feat 15x30 av size	1985	200	$4,550
Patio - Concrete Slab w/Roof Aluminum or Fiber	1997	342	$2,309
Patio - Brick, Tile, Flagstone	1985	547	$4,001

The Property Appraiser is continually editing and updating the tax roll. This website may not reflect the most current information on record. The Property Appraiser and Miami-Dade County assumes no liability, see full disclaimer and User Agreement at http://www.miamidade.gov/info/disclaimer.asp

PROPERTY APPRAISER OF MIAMI-DADE COUNTY

Generated On: 02/17/2025

Property Information

Folio: 05-3118-016-1591
Property Address: 300 FALCON AVE

Roll Year **2022** Land, Building and Extra-Feature Details

LAND INFORMATION

Land Use	Muni Zone	PA Zone	Unit Type	Units	Calc Value
GENERAL	R-1C	0400	Square Ft.	7,500.00	$225,000

BUILDING INFORMATION

Building Number	Sub Area	Year Built	Actual Sq.Ft.	Living Sq.Ft.	Adj Sq.Ft.	Calc Value
1	1	1985	2,700	1,917	2,308	$252,057

EXTRA FEATURES

Description	Year Built	Units	Calc Value
Wood Fence	1985	211	$2,228
Pool COMM AVG 3-6' dpth, plain feat 15x30 av size	1985	200	$4,620
Patio - Concrete Slab w/Roof Aluminum or Fiber	1997	342	$2,339
Patio - Brick, Tile, Flagstone	1985	547	$4,031

The Property Appraiser is continually editing and updating the tax roll. This website may not reflect the most current information on record. The Property Appraiser and Miami-Dade County assumes no liability, see full disclaimer and User Agreement at http://www.miamidade.gov/info/disclaimer.asp

PROPERTY APPRAISER OF MIAMI-DADE COUNTY

Generated On: 02/17/2025

Property Information

Folio: 05-3118-016-1591
Property Address: 300 FALCON AVE

FULL LEGAL DESCRIPTION
CINEMA PARK COUNTRY CLUB ESTS
ADDN
PB 17-2
NWLY 1/2 LOTS 1 & 2 BLK 58
LOT SIZE 75.000 X 100
OR 20258-2983 03/2002 1

SALES INFORMATION

Previous Sale	Price	OR Book-Page	Qualification Description
04/20/2023	$100	33689-0924	Corrective, tax or QCD; min consideration
04/14/2023	$100	33689-0922	Corrective, tax or QCD; min consideration
03/23/2012	$320,000	28047-4333	Qual by exam of deed
07/21/2011	$210,500	27810-4806	Financial inst or "In Lieu of Forclosure" stated
11/29/2010	$236,100	27693-4116	Financial inst or "In Lieu of Forclosure" stated
03/01/2002	$265,000	20258-2983	Sales which are qualified
11/01/1984	$34,890	12328-1000	Sales which are qualified

The Property Appraiser is continually editing and updating the tax roll. This website may not reflect the most current information on record. The Property Appraiser and Miami-Dade County assumes no liability, see full disclaimer and User Agreement at http://www.miamidade.gov/info/disclaimer.asp

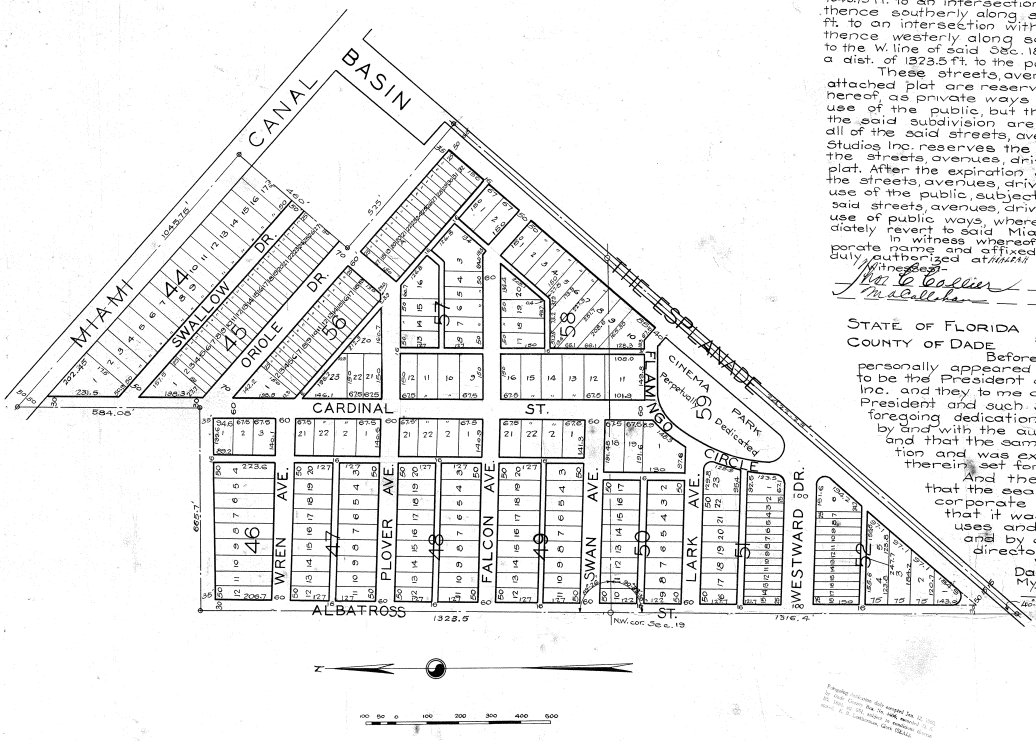

KNOW ALL MEN BY THESE PRESENTS

That the Miami Studios Inc. a corporation organized and ex under and by virtue of the laws of the State of ~~Florida~~ Delaware and authorized to Florida has caused to be made the attached plat of "Cinema Park Addition to Country Club Estates" subdivision of that certain property lying and being in Dade County, Florida, described as follows:-

For a point of beginning take the N.W. cor. of Sec. 19, Twp. 53S, R. 41 E, thence southerly along W. line of said Sec. 19, 1316.4 ft. to an intersection with the centerline of an existing canal known as the South Side Canal, thence northeasterly along centerline of said South Side Canal 1753.75 ft. to an intersection with N. line of said Sec. 19 at a point 1145.3 ft. east of the N.W. cor. of Sec. 19, thence continue northeasterly along the centerline of said South Side Canal, 287.15 ft. to an intersection with the east line of W. ½ of S.W. ¼ of Sec. 18, Twp. 53S. R. 41 E., thence continue northeasterly along centerline of said South Side Canal 381.33 ft., thence northwesterly at rt. angles 525 ft., thence northeasterly at rt. angles 460 ft. to an intersection with the centerline of an existing canal known as the Miami Canal, thence northwesterly along centerline of said Miami Canal a dist. of 1045.75 ft. to an intersection with W. line of E ½ of W ½ of S.W. ¼ of said Sec. 18, thence southerly along said W. line of E. ½ of W ½ of S.W. ¼ of Sec. 18, 584.08 ft. to an intersection with the S. line of N.W. ¼ of S.W. ¼ of said Sec. 18, thence westerly along said S. line of N.W. ¼ of S.W. ¼ of said Sec. 18, 665.7 ft. to the W. line of said Sec. 18, thence southerly along said W. line of Sec. 18 a dist. of 1323.5 ft. to the point of beginning.

These streets, avenues, drives and alleys as shown on said attached plat are reserved for a period of five years from date hereof, as private ways and are not in any manner dedicated to the use of the public, but the owners and purchasers of any lot or lots in the said subdivision are hereby given the right of passage over any and all of the said streets, avenues, drives and alleys but the said Miami Studios Inc. reserves the right to alter, modify or change any or all of the streets, avenues, drives and alleys as are shown on attached plat. After the expiration of the period of five years as aforesaid all of the streets, avenues, drives and alleys are dedicated to the perpetual use of the public, subject, nevertheless to a reversionary right should said streets, avenues, drives and alleys be abandoned or discontinued for use of public ways, whereupon the title and right of possession shall immediately revert to said Miami Studios Inc.

In witness whereof said Miami Studios Inc. has hereto set its corporate name and affixed its corporate seal by its officers thereunto duly authorized at Hialeah Florida, this 17th day of June A.D. 1925

Witnesses:-

Wm C Collier

M A Callahan

Miami Studios Incorporated

Pres. President

Attest Secretary E. G. Sewell

STATE OF FLORIDA
COUNTY OF DADE s.s.

Before me the undersigned authority this day personally appeared G.H. Curtiss and E.G. Sewell to me known to be the President and Secretary, respectively, of Miami Studios Inc. and they to me did acknowledge and declare that as such President and such Secretary they executed and signed the foregoing dedication for and on behalf of thesaid coporation and by and with the authority of the board of directors thereof and that the same is a free act and deed of said corporation and was executed and signed for the uses and puposes therein set forth.

And they furthermore acknowledged and declared that the seal attached thereto is a true and proper corporate seal of the said Miami Studios Inc. and that it was affixed thereto by its Secretary for the uses and purposes in the dedication set forth, and by and with the authority of the board of directors.

Witness my hand and official seal at Hialeah Dade County, Florida, this 17th day of June A.D. 1925

My commission expires Nov. 22, 1927

Hazel Sheddan
Notary Public, State of Florida

I certify that the attached plat of "Cinema Park Addition to Country Club Estates" was made in conformity with a survey of the property recently made by me and is accurate and correct to the best of my knowledge and belief.

Dan'l E. Clune
Registered Engineer #147

Examined and approved for record

Hobart Crabtree
County Engineer
State of Florida
County of Dade

CINEMA PARK

ADDITION TO

COUNTRY CLUB ESTATES

DAN'L E. CLUNE
ENGINEERING

DESCRIPTION	Cinema Add to C.C. Estates	
FOR		
SURVEYED BY	Bell	DATE
CALCULATED BY	TAK	
DRAWN BY	TAK	
CHECKED BY	T.C.	DATE
REVISED		DATE
APPROVED		DATE

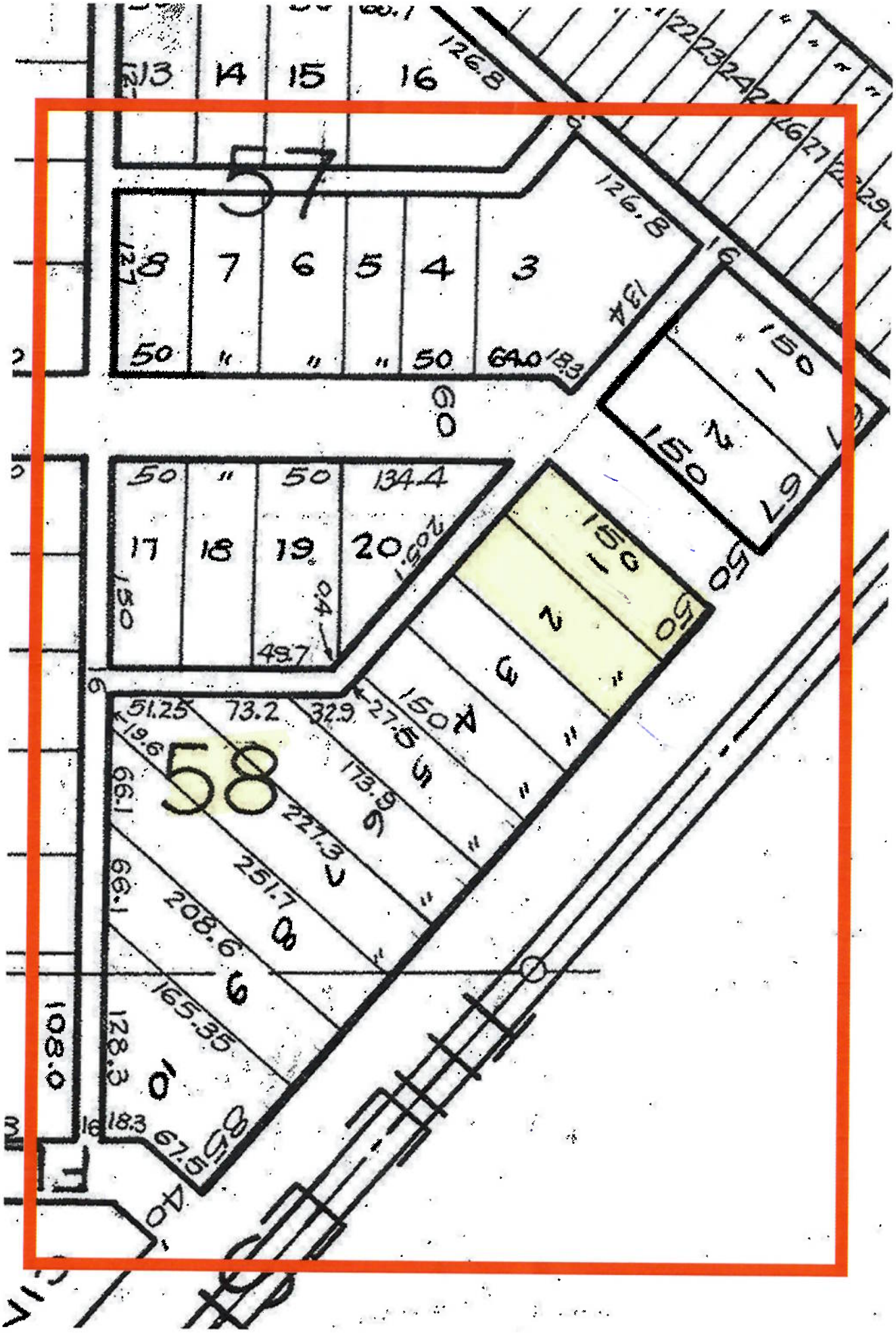
57
58
13
14
15
16
8
7
6
5
4
3
17
18
19
20
126.8
134
50
64.0
18.3
134.4
205.1
49.7
51.25
73.2
32.9
27.5
173.9
227.3
251.7
208.6
165.35
128.3
67.5
108.0
150
67
50
40

Rear
Side
Front
Side
Original house
Location before
lot split

ALLEY

Became 300 Falcon Ave in 1985

75.00

75.00

remainder of Lot 2

remainder of Lot 1

50

50

FALCON

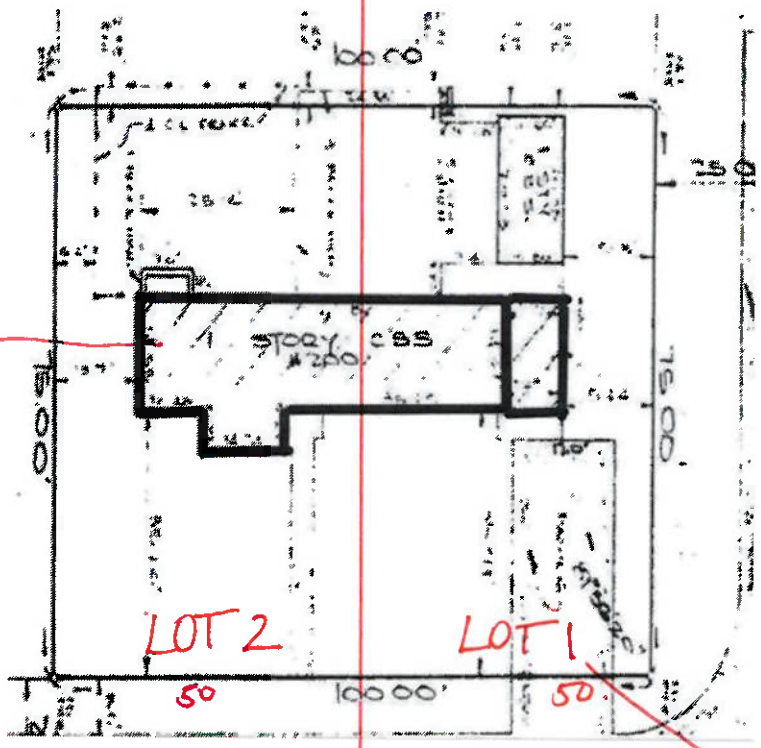

Original Structure 1947

corner lot

ESPLANADE

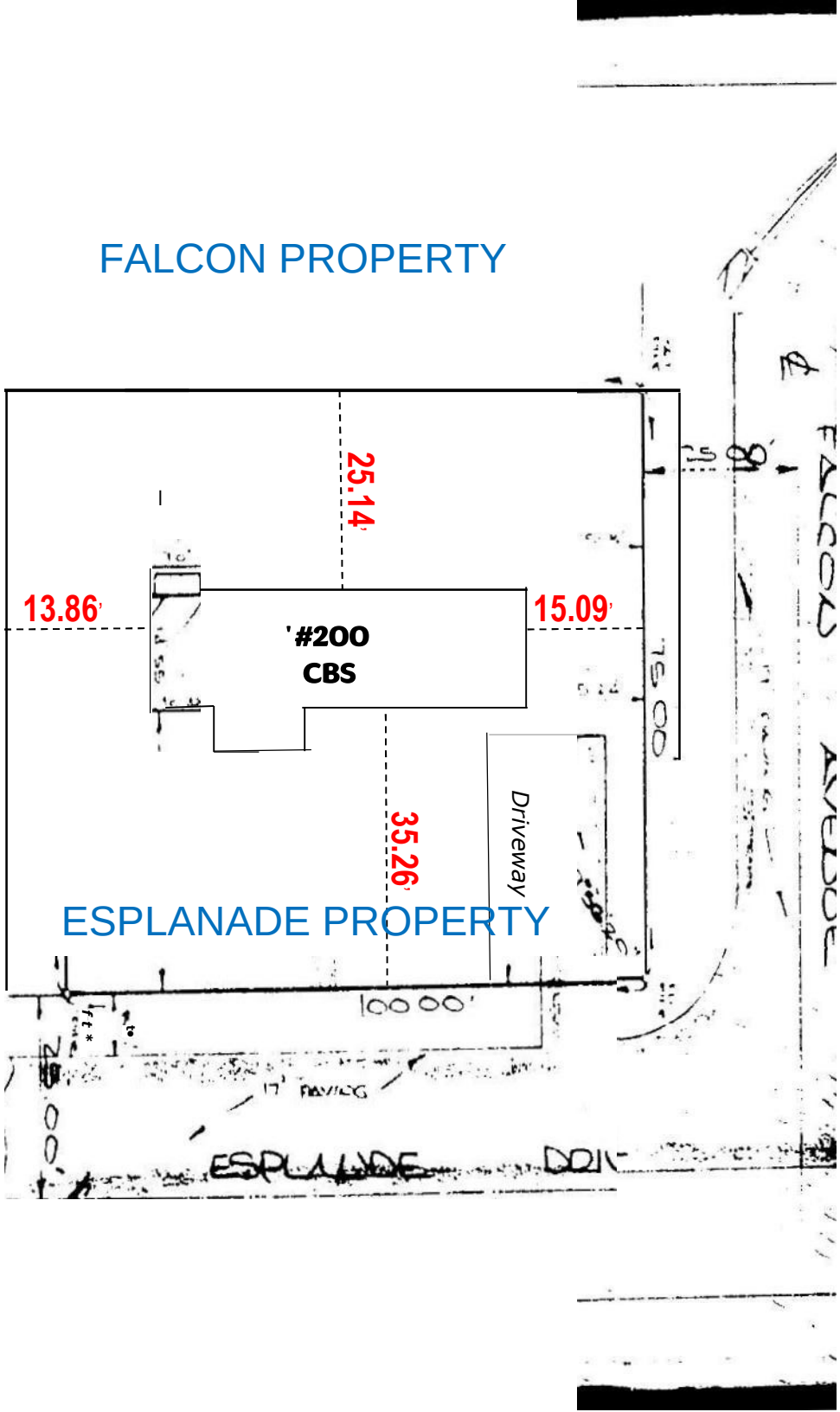
FALCON PROPERTY
25.14'
13.86'
15.09'
'#200
CBS
35.26'
Driveway
ESPLANADE PROPERTY
100.00'
ESPLANADE

OFFICE OF THE PROPERTY APPRAISER

Aerial Year: 2005
Folio: 0531180161590
Address:200 N ESPLANADE DR, Miami Springs, FL 33166-4412

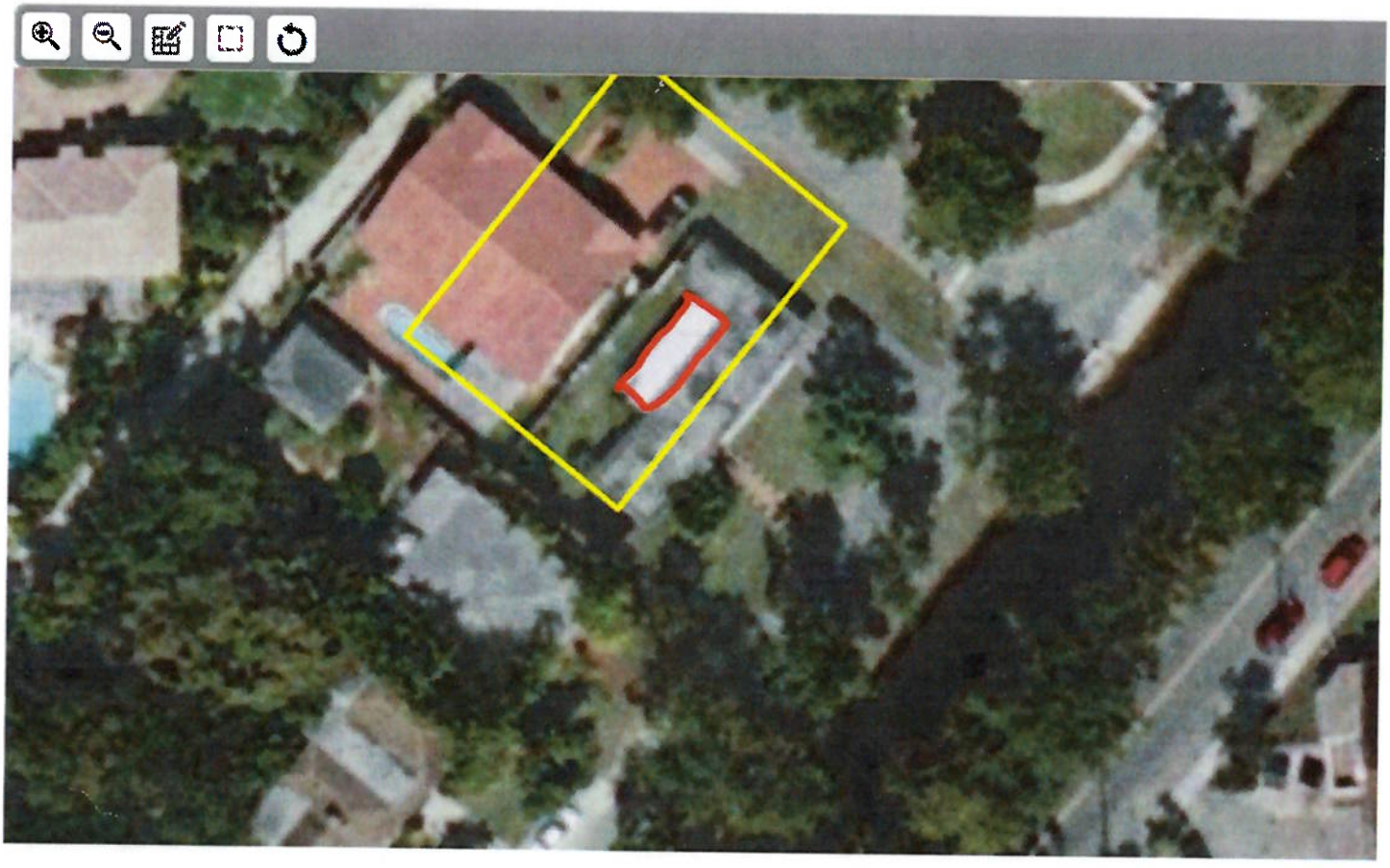

▭ - Illegal Structures
1955 - Enclosure w/o Plumbing
165 S.F.
2017 - Building Addition w/o Plumbing
378 S.F.

LOCATION SKETCH

Scale 1" = 100'

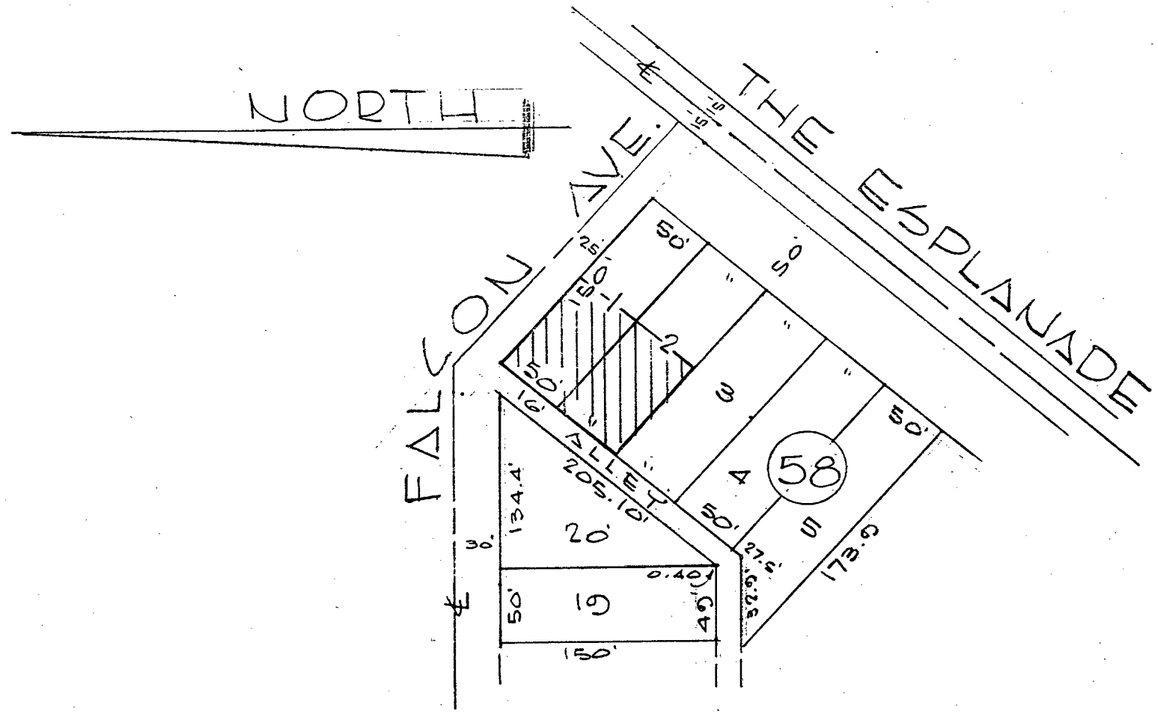

SKETCH OF SURVEY

The Northwesterly 1/2 of Lots 1 and 2, Block 50, CINEMA PARK ADDITION TO COUNTRY CLUB ESTATES, according to the plat thereof, as recorded in Plat Book 17, at Page 2, of the Public Records of Dade County, Florida.

For
JOAI INVESTMENTS

J.N. 16920
F.B. 161-70
Date: 9-18-84
"REVISED SURVEY: March 19, 1985"

JUAN R. MARTINEZ & ASSOCIATES, INC.
8500 W. Flagler St., Suite A-105 Phone: 552-7007
Miami, Florida 33144 Scales as Shown

WE HEREBY CERTIFY: That the "SKETCH OF SURVEY" represents the above described property and is true and correct to the best of our knowledge and belief, and meets the Minimum Technical Standards, set forth by the Florida Board of Land Surveyors, pursuant to Section 472.027, Florida

NOTE: NOT VALID UNLESS SEALED WITH AN EMBOSSED SURVEYOR'S SEAL.

BY: JUAN R. MARTINEZ, Pres.
Professional Land Surveyor No.2160
State of Florida

J.N. 16920

Soundings

SKETCH OF SURVEY

Scale 1" = 20'

Proof of 5.

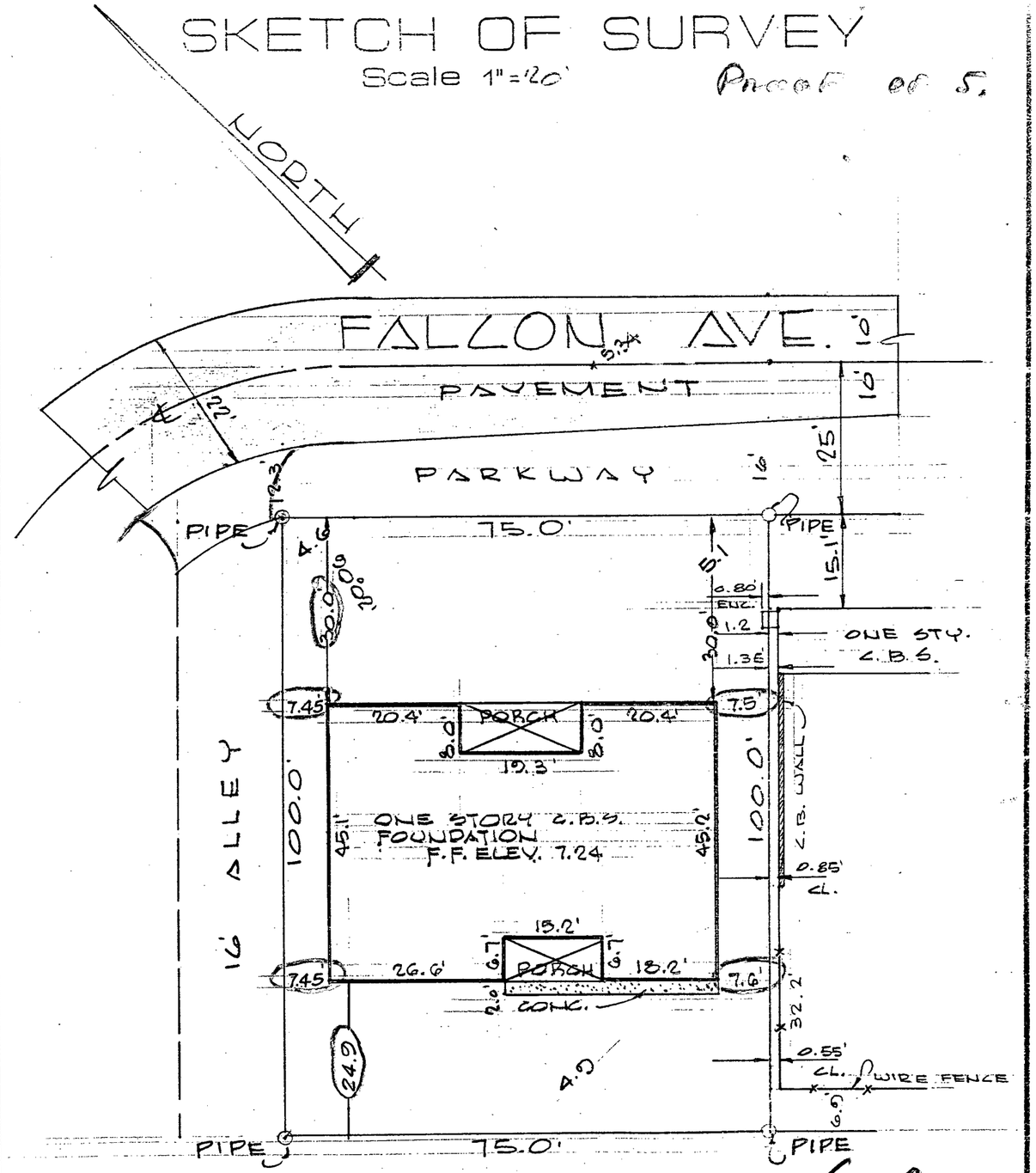

NOTE: FOUNDATION LOCATED: 3-19-85

ELEVATIONS ARE REFERRED TO M.S.L. DATUM

3/20

SKETCH OF SURVEY

Scale 1" = 20'

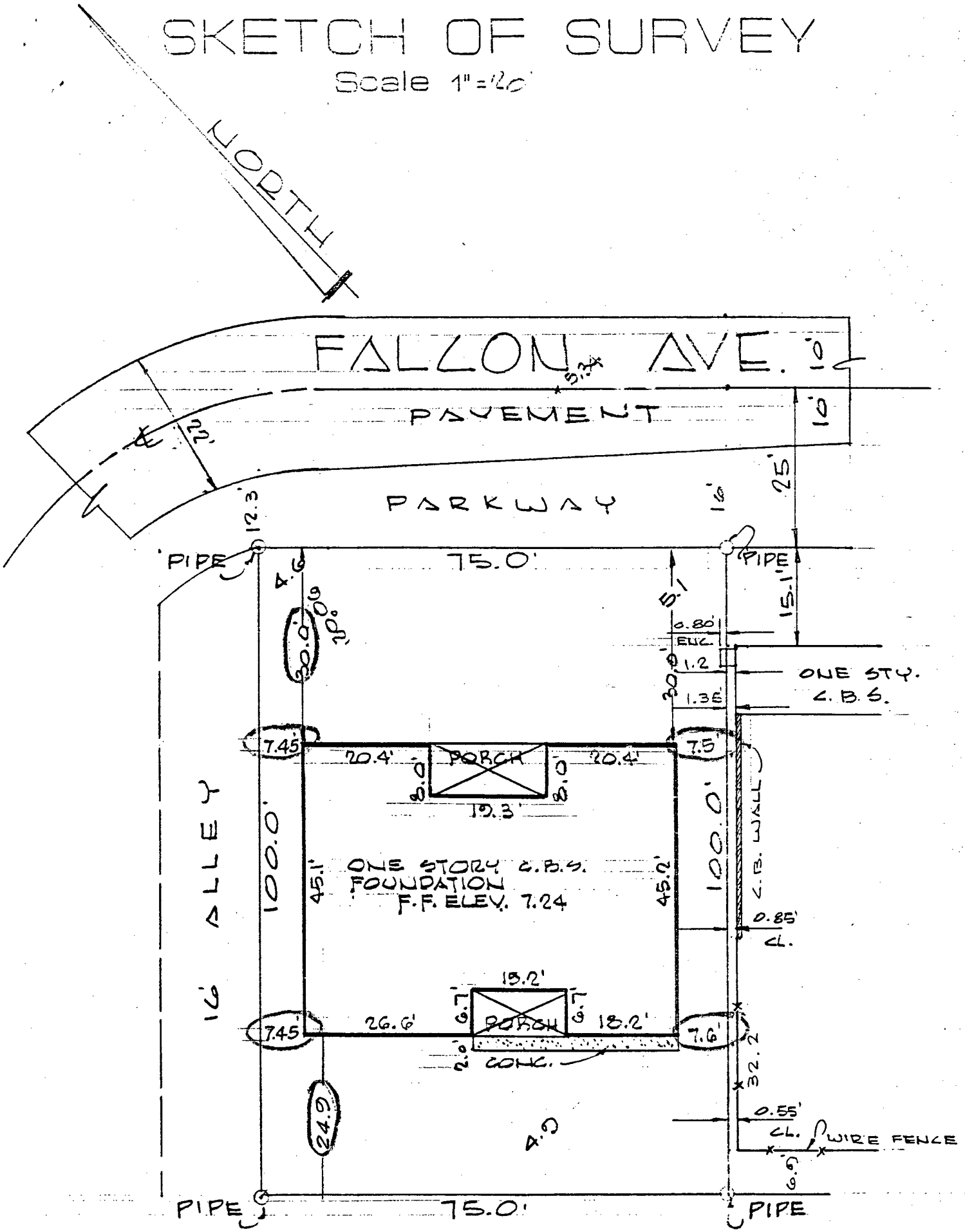

NOTE: FOUNDATION LOCATED: 3-19-85

ELEVATIONS ARE REFERRED TO M.S.L. DATUM

Jackson/Zahn

J.H. MANUCY, INC.

PROFESSIONAL LAND SURVEYORS

4694 Palm Avenue, Suite 203 • Hialeah, Florida 33012
DADE (305) 821-1281 • (305) 821-1220 BROWARD (305) 563-2066

I HEREBY CERTIFY THAT THIS PLAT OF SURVEY WAS PREPARED UNDER MY DIRECTION, THAT IT MEETS THE MINIMUM TECHNICAL STANDARDS FOR LAND SURVEYING IN THE STATE OF FLORIDA (CHAPTER 21HH-6 FLORIDA ADMINISTRATIVE CODE) FOR THE TYPE OF SURVEY SHOWN HEREON AND IS TRUE AND CORRECT TO THE BEST OF MY KNOWLEDGE AND BELIEF.

J.H. Manucy, Professional Land Surveyor #1128
John F. Pulice, Professional Land Surveyor #2691

State of Florida Date September 1, 1983

BOUNDARY SURVEY

WAIVER OF PLAT.

8/13/84

* LEGAL DESCRIPTION

a.k.a. 300 FALCON AVE.

M.S.C.O. SEC. 150, 151, 152

BUILDING OFFICIAL, CITY OF MIAMI SPRINGS

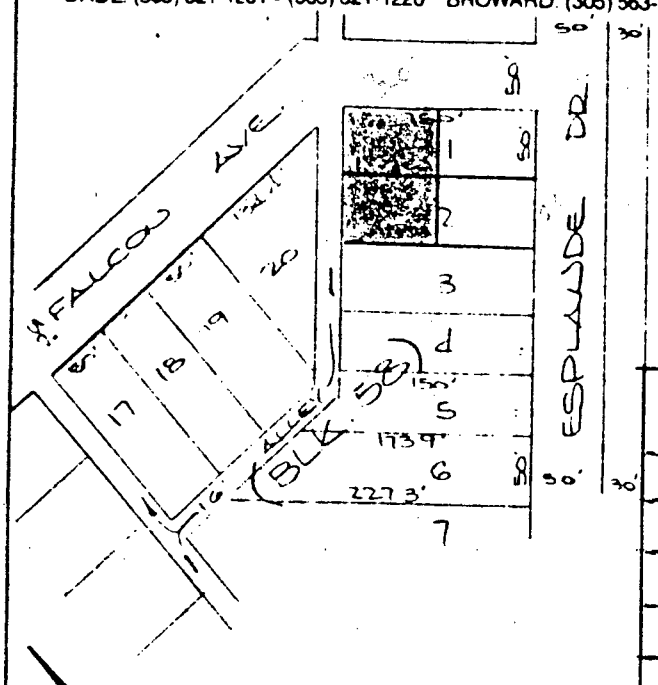

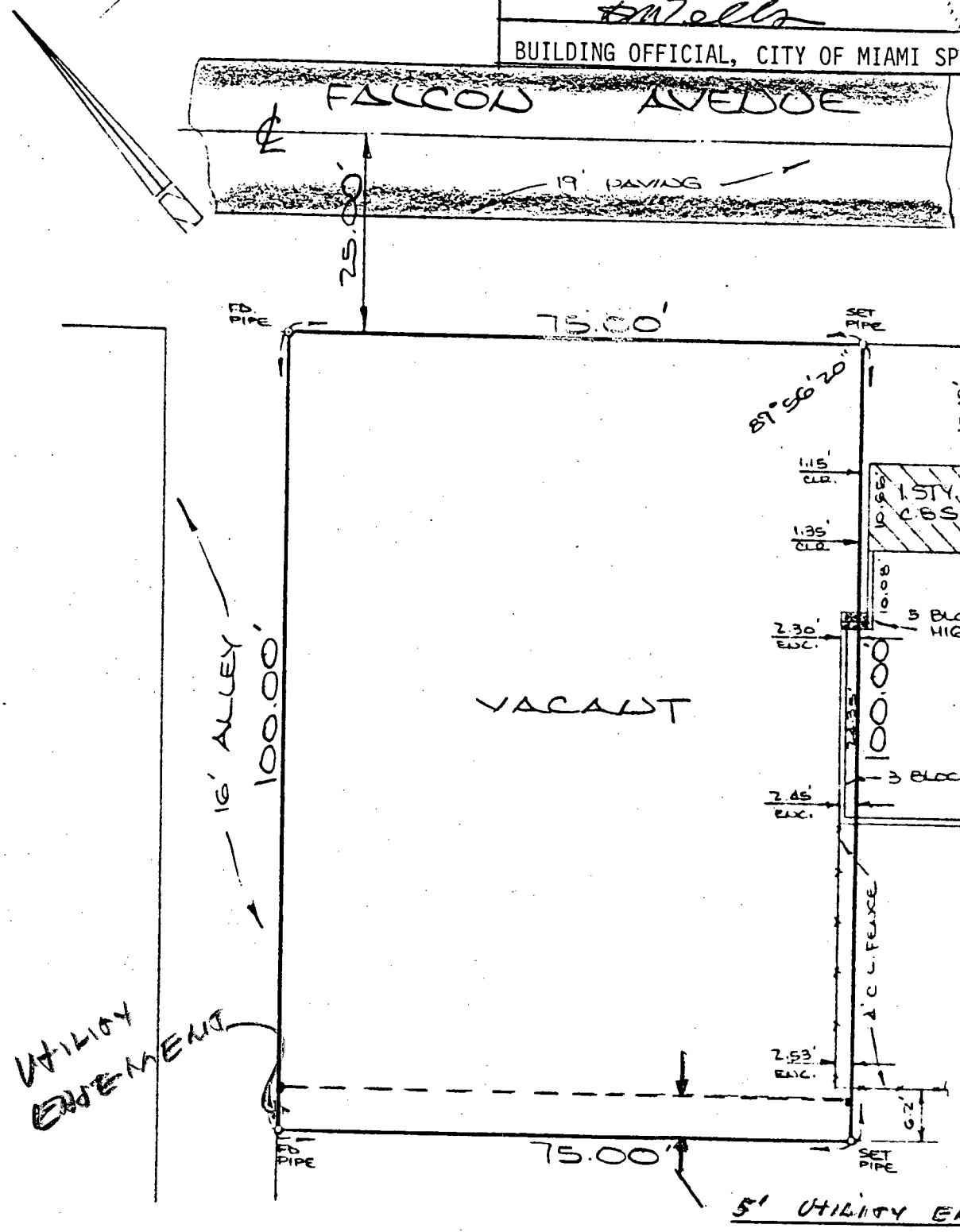

CERTIFIED to be a true copy of Waiver of Plat duly executed at Miami Springs City Hall, 201 Westward Dr., Miami Springs, FL.
Deputy City Clerk

* The Northwesterly ½ of Lots 1 & 2, Block 58 of CINEMA PARK ADDITION TO COUNTRY CLUB ESTATES as recorded in Plat Book 17 at Page 2 according to the Plat thereof of the Public Records of Dade County, Florida.

FOR: Thomas W. Jackson

DATE: August 31, 1983

SCALE: 1" = 20' ORDER No. 27237 F.B. A152-49 REV.

REV.

J.H. MANUCY, INC.

PROFESSIONAL LAND SURVEYORS

4694 Palm Avenue, Suite 203 • Hialeah, Florida 33012

DADE: (305) 821-1281 • (305) 821-1220 BROWARD (305) 563-2066

I HEREBY CERTIFY THAT THIS PLAT OF SURVEY WAS PREPARED UNDER MY DIRECTION, THAT IT MEETS THE MINIMUM TECHNICAL STANDARDS FOR LAND SURVEYING IN THE STATE OF FLORIDA (CHAPTER 21HH-6 FLORIDA ADMINISTRATIVE CODE) FOR THE TYPE OF SURVEY SHOWN HEREON AND IS TRUE AND CORRECT TO THE BEST OF MY KNOWLEDGE AND BELIEF.

J.H. Manucy, Professional Land Surveyor #1128
John F. Pulice, Professional Land Surveyor #2691

State of Florida Date September 1, 1983

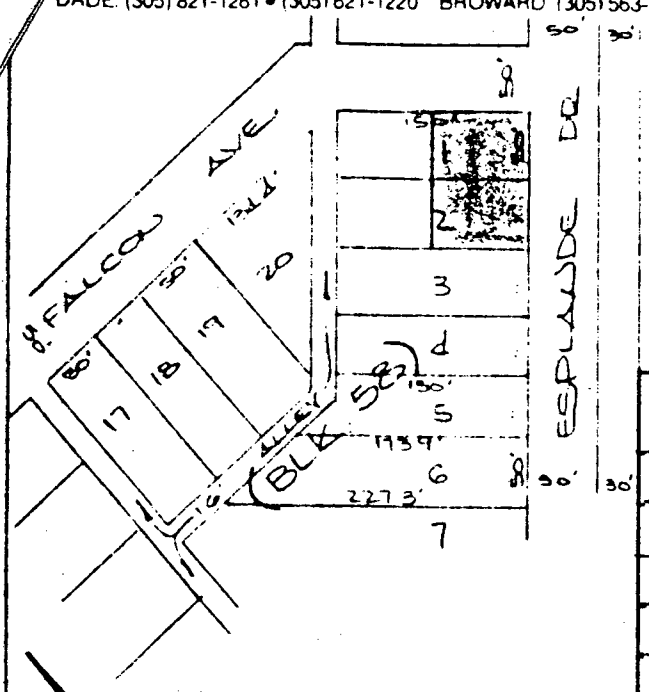

BOUNDARY SURVEY

WAIVER OF PLAT:

8/13/84

* LEGAL DESCRIPTION

a.k.a. 200 ESPLANADE

M.S.C.O. SEC. 150, 151, 152

K.M. Wells

BUILDING OFFICIAL, CITY OF MIAMI SPRINGS

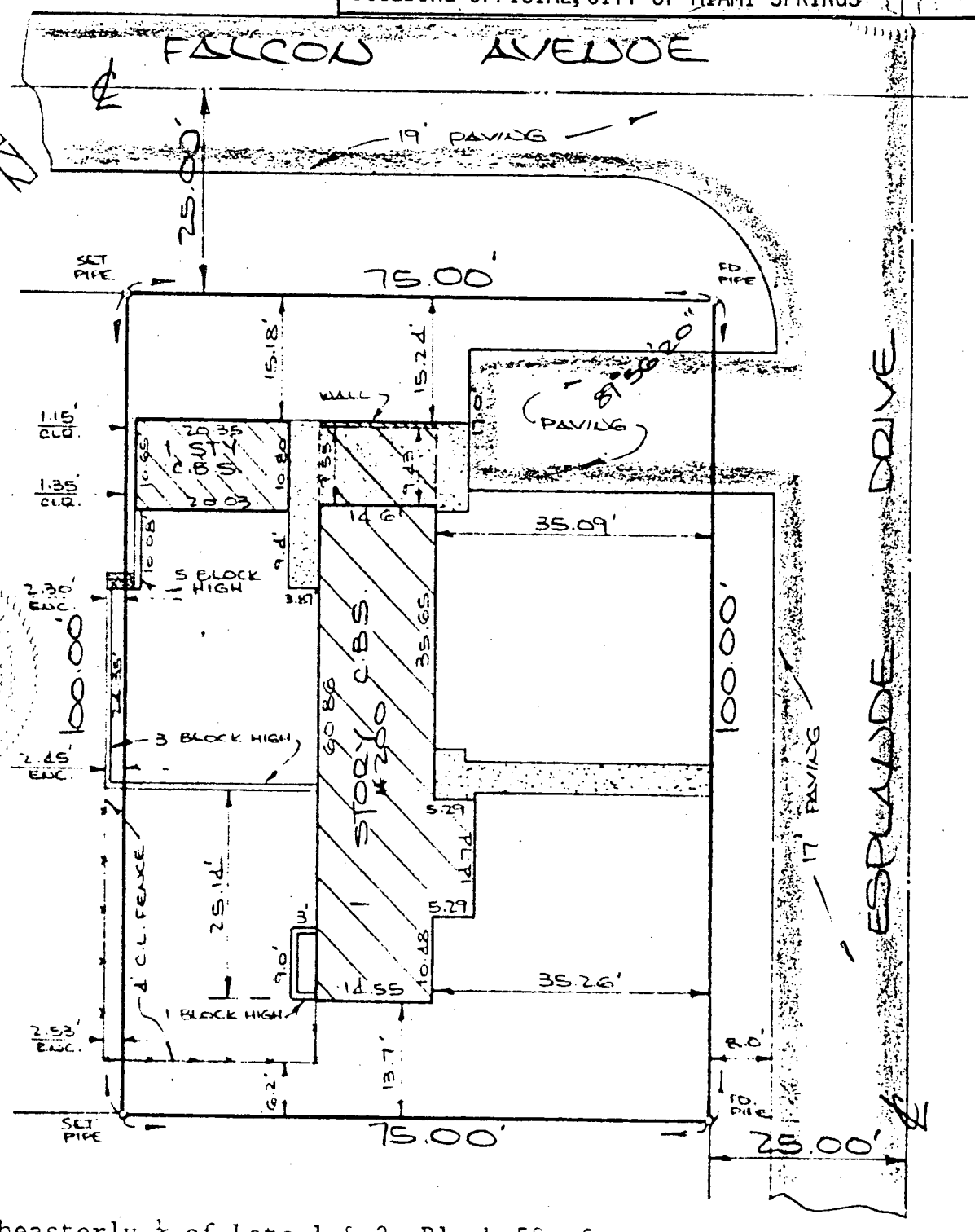

Certified to be a true copy of Waiver of Plat duly executed at Miami City Hall, 201 Westward Dr., Miami Springs, FL.

Deputy City Clerk

* The Southeasterly ½ of Lots 1 & 2, Block 58 of CINEMA PARK ADDITION TO COUNTRY CLUB ESTATES

as recorded in Plat Book 17 at Page 2 according to the Plat thereof of the Public Records of Dade County, Florida.

FOR Thomas W. Jackson DATE August 31, 1983

SCALE 1" = 20' ORDER No. 27237 F.B. A152-49 REV.

REV.

PAGE 1 OF 1

TYPE OF SURVEY:
☐ BOUNDARY ■ CONSTRUCTION ☐ CONDOMINIUM
☐ ALTA/NSPS ☐ TOPOGRAPHIC ☐ SPECIAL PURPOSE

PURPOSE OF SURVEY (SEE GENERAL NOTES BELOW):
PROPERTY IMPROVEMENTS-FENCE

N
W E
S
SCALE:1"=20'

BEARING REFERENCE:
NONE. RECORD INFORMATION LACKS ANGULAR DATA.
ALL ANGULAR DATA SHOWN BASED UPON FIELD OBSERVATION ONLY.



AERIAL PHOTOGRAPH
(MAY NOT SHOW LATEST IMPROVEMENTS)
(NOT-TO-SCALE)

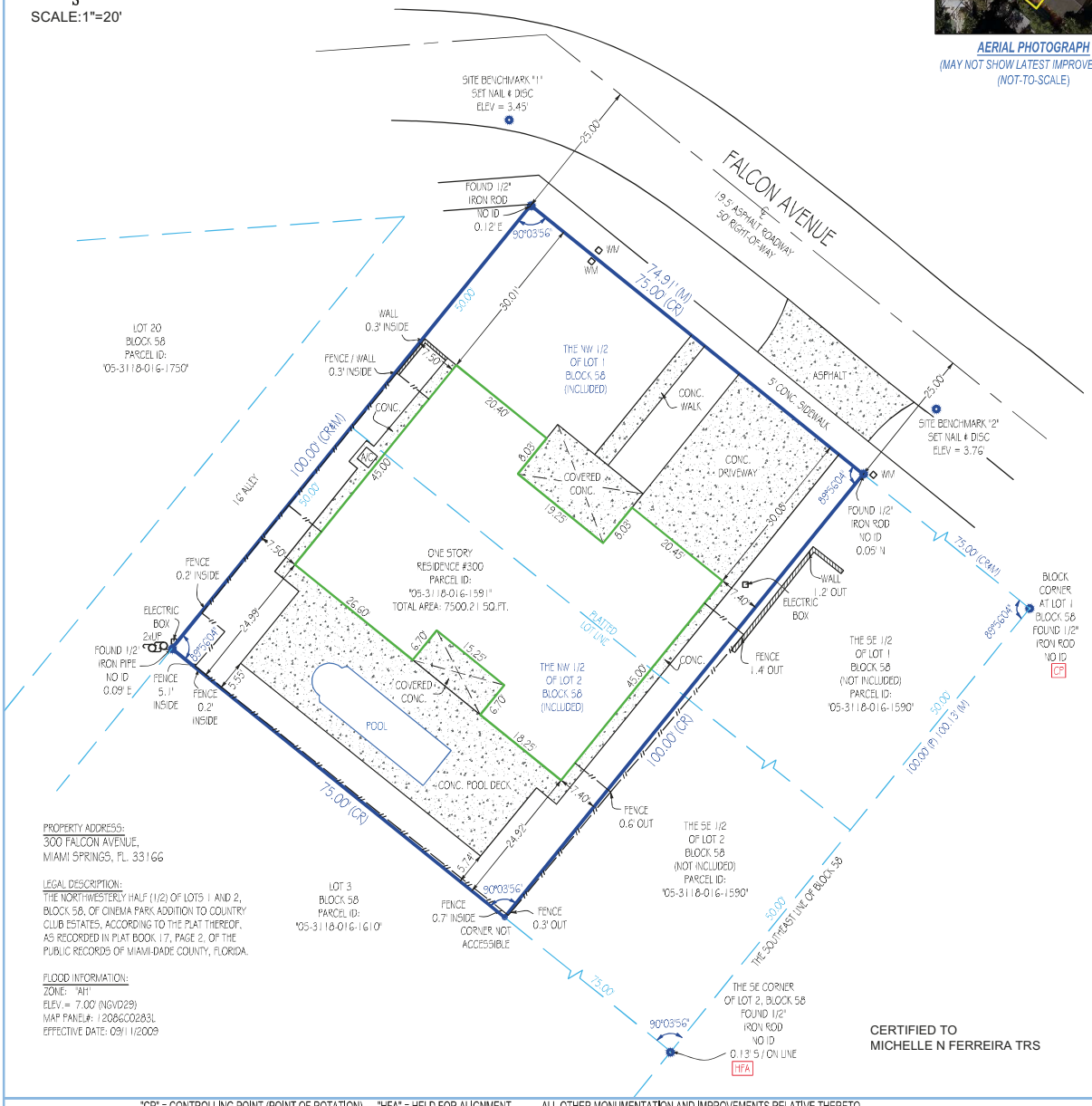

CERTIFIED TO
MICHELLE N FERREIRA TRS

PROPERTY ADDRESS:
300 FALCON AVENUE,
MIAMI SPRINGS, FL. 33166

LEGAL DESCRIPTION:
THE NORTHWESTERLY HALF (1/2) OF LOTS 1 AND 2, BLOCK 58, OF CINEMA PARK ADDITION TO COUNTRY CLUB ESTATES, ACCORDING TO THE PLAT THEREOF, AS RECORDED IN PLAT BOOK 17, PAGE 2, OF THE PUBLIC RECORDS OF MIAMI-DADE COUNTY, FLORIDA.

FLOOD INFORMATION:
ZONE: "AH"
ELEV.= 7.00' (NGVD29)
MAP PANEL#: 12086C0283L
EFFECTIVE DATE: 09/11/2009

"CP" = CONTROLLING POINT (POINT OF ROTATION) "HFA" = HELD FOR ALIGNMENT - ALL OTHER MONUMENTATION AND IMPROVEMENTS RELATIVE THERETO

Platted Easements & Notable Conditions (unplatted easements also listed if provided): IF APPLICABLE, RECIPIENTS OF THIS SURVEY SHOULD REVIEW THE POSITION OF ANY FENCE LINES SHOWN AND THEIR RELATIONSHIP TO THE BOUNDARY LINE.

- NO NOTABLE CONDITIONS FOUND.

This survey has been issued by the following Landtec Surveying office:
700 West Hillsboro Boulevard, Suite 4-100
Deerfield Beach, FL 33441
Office: (561) 367-3587
Fax: (561) 465-3145
www.Landtecsurvey.com

ABBREVIATION LEGEND (SOME ITEMS IN LEGEND MAY NOT APPEAR ON DRAWING):

A OR AL = ARC LENGTH	EL OR ELEV = ELEVATION	PRC = POINT OF REVERSE CURVE	M = MEASURED		WM = WATER METER
C/O = CLEANOUT	P = PLAT	PT = POINT OF TANGENCY	O/HC = OVER-HEAD CABLE		WV = WATER VALVE
CA = CENTRAL ANGLE	PC = POINT OF CURVE	EM = ELECTRIC METER	QTR = QUARTER		
CATV = CABLE TV RISER	PCC = POINT OF COMPOUND CURVE	F.F.E. = FINISHED FLOOR ELEV.	R = RADIUS		
CF = CALCULATED FROM FIELD	PH = POOL HEATER	FIR = FOUND IRON ROD	RNG = RANGE		
CH = CHORD DISTANCE	PI = POINT OF INTERSECTION	FN = FOUND NAIL	SEC = SECTION		
CONC. = CONCRETE	POB = POINT OF BEGINNING	FND = FOUND	TR = TELEPHONE RISER		
CR = CALCULATED FROM RECORD	POC = POINT OF COMMENCEMENT	G.F.F.= GARAGE FINISHED FLOOR	TWP = TOWNSHIP		
DE = DRAINAGE EASEMENT	PP = POOL PUMP	L= LEGAL DESCRIPTION	UE = UTILITY EASEMENT		
			UP = UTILITY POLE		

SYMBOLS (SOME ITEMS IN LEGEND MAY NOT APPEAR ON DRAWING - NOT TO SCALE):

= UTILITY POLE	= WELL	= HANDICAP PARKING SPACE	
= LIGHT POLE	= CENTER LINE		
= CATCH BASIN	= PARTY WALL		
= FIRE HYDRANT	AC = AIR CONDITIONER	= SEC, QTR, CORNER	
= MANHOLE	= SEPTIC LID		
= WATER VALVE	X = ELEV. SHOT	= SECTION CORNER	
WM = WATER METER			

LINETYPES:
BOUNDARY
BUILDING
EASEMENT
CHAIN LINK FENCE
WOOD FENCE
PLASTIC FENCE
OVERHEAD CABLE

GENERAL NOTES:
1. THIS SURVEY IS BASED UPON RECORD INFORMATION PROVIDED BY CLIENT, NO SPECIFIC SEARCH OF THE PUBLIC RECORD HAS BEEN MADE BY THIS OFFICE UNLESS OTHERWISE NOTED.
2. AS INDICATED ABOVE, UNDER "PURPOSE OF SURVEY", IF THIS SURVEY HAS BEEN PREPARED FOR A PURCHASE OR REFINANCE, ITS SCOPE IS LIMITED TO THE DETERMINATION OF TITLE DEFICIENCIES, AND IS NOT INTENDED FOR USE IN DESIGN OR CONSTRUCTION PURPOSES. LANDTEC SURVEYING ASSUMES NO RESPONSIBILITIES FOR ERRORS RESULTING FROM FAILURE TO ADHERE TO THIS CLAUSE.
3. ANY FENCES SHOWN HEREON ARE ILLUSTRATIVE OF THEIR GENERAL POSITION ONLY. FENCE TIES SHOWN ARE TO GENERAL CENTERLINE OF FENCE. THIS OFFICE WILL NOT BE RESPONSIBLE FOR DAMAGES RESULTING FROM THE REMOVAL OF, OR CHANGES MADE TO, ANY FENCES UNLESS WE HAVE PROVIDED A SURVEY SPECIFICALLY LOCATING SAID FENCES FOR SUCH PURPOSES. DETERMINATION OF FENCE POSITIONS SHOULD BE BASED SOLELY ON THEIR PHYSICAL RELATIONSHIP TO THE MONUMENTED BOUNDARY LINES.
4. GRAPHIC REPRESENTATIONS MAY HAVE BEEN EXAGGERATED TO MORE CLEARLY ILLUSTRATE MEASURED RELATIONSHIPS - DIMENSIONS SHALL HAVE PRECEDENCE OVER SCALED POSITIONS.
5. UNDERGROUND IMPROVEMENTS HAVE NOT BEEN LOCATED EXCEPT AS SPECIFICALLY SHOWN.
6. ELEVATIONS ARE BASED UPON NATIONAL GEODETIC VERTICAL DATUM (N.G.V.D. 1929) OR NORTH AMERICAN VERTICAL DATUM (N.A.V.D. 1988) AS SHOWN ABOVE.
7. ALL BOUNDARY AND CONTROL DIMENSIONS SHOWN ARE FIELD MEASURED AND CORRESPOND TO RECORD INFORMATION UNLESS SPECIFICALLY NOTED OTHERWISE.
8. ANY CORNERS SHOWN AS "SET" HAVE EITHER BEEN SET ON THE DATE OF FIELD WORK, OR WILL BE SET WITHIN 2 BUSINESS WEEKS OF SAID DATE AND ARE IDENTIFIED WITH A CAP MARKED LB (LICENSED BUSINESS) #8507.

Job Nr: 184772-SE	Date of Field Work : 09/04/2023	Drawn by: I. B.

I HEREBY CERTIFY THAT THIS SURVEY MEETS THE STANDARDS OF PRACTICE AS OUTLINED IN CHAPTER 5J-17.051 & 5J-17.052 OF THE FLORIDA ADMINISTRATIVE CODE, PURSUANT TO SECTION 472.027, FLORIDA STATUTES, AND THAT THE ELECTRONIC SIGNATURE AND SEAL HEREON MEETS PROCEDURES AS SET FORTH IN CHAPTER 5J-17.062, PURSUANT TO SECTION 472.025, FLORIDA STATUTES.

PABLO A. ALVAREZ LICENSE No PSM #7324 STATE OF FLORIDA PROFESSIONAL LAND SURVEYOR

Digitally signed by Pablo A Alvarez
DN: c=US, o=Florida, dnQualifier=A01410C0000018973AE9DDC0007F8C1, cn=Pablo A Alvarez
Date: 2023.09.11 14:22:43 -04'00'

SIGNATURE
DATE 9-11-2023
PABLO ALVAREZ - PROFESSIONAL SURVEYOR AND MAPPER
FLORIDA REGISTRATION NO. 8507 (NOT VALID WITHOUT THE SIGNATURE AND ORIGINAL RAISED SEAL OR THE ELECTRONIC SEAL OF THE FLORIDA LICENSED SURVEYOR AND MAPPER SHOWN ABOVE)

Elevations, if shown:
Benchmark: N-765
Benchmark Elev.: 7.63'
Benchmark Datum: NAVD 29
Elevations on Drawing are in:
N.G.V.D.29 ☐ N.A.V.D.88 ■

Revisions:	

PRINTING INSTRUCTIONS:
WHEN PRINTING THIS PDF IN ADOBE, SELECT "ACTUAL SIZE" TO ENSURE CORRECT SCALING.
DO NOT USE "FIT".

LANDTEC SURVEYING and Lien
LICENSED BUSINESS No. 8507

Miami-Dade Property Appraiser

Property Address: 200 N ESPLANADE DR, Miami Springs, FL 33166-4412



02/08/2006

Date Printed: 02/18/2025

Miami-Dade Property Appraiser

Property Address: 200 N ESPLANADE DR, Miami Springs, FL 33166-4412

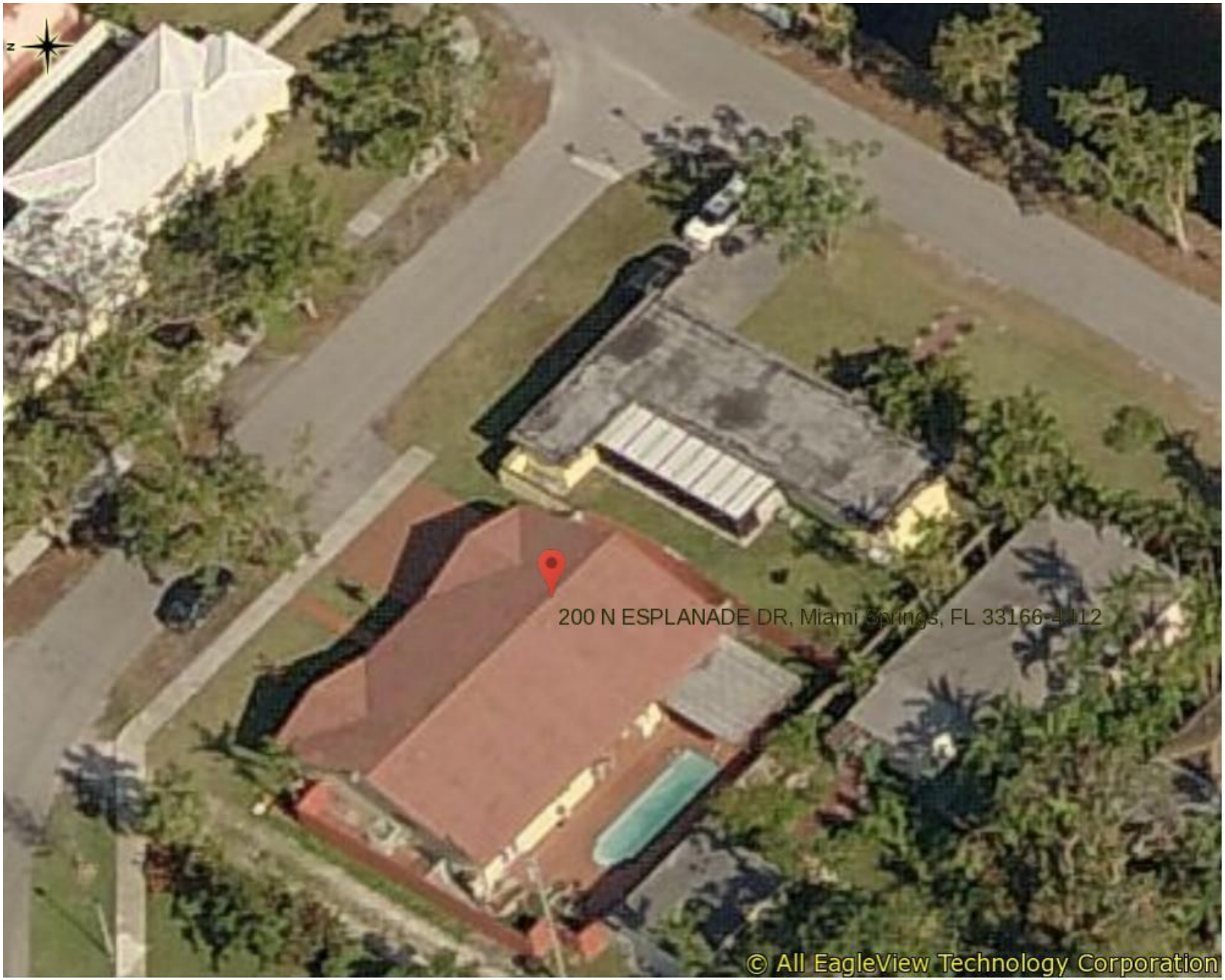

02/10/2006

Date Printed: 02/18/2025

Miami-Dade Property Appraiser

Property Address: 200 N ESPLANADE DR, Miami Springs, FL 33166-4412

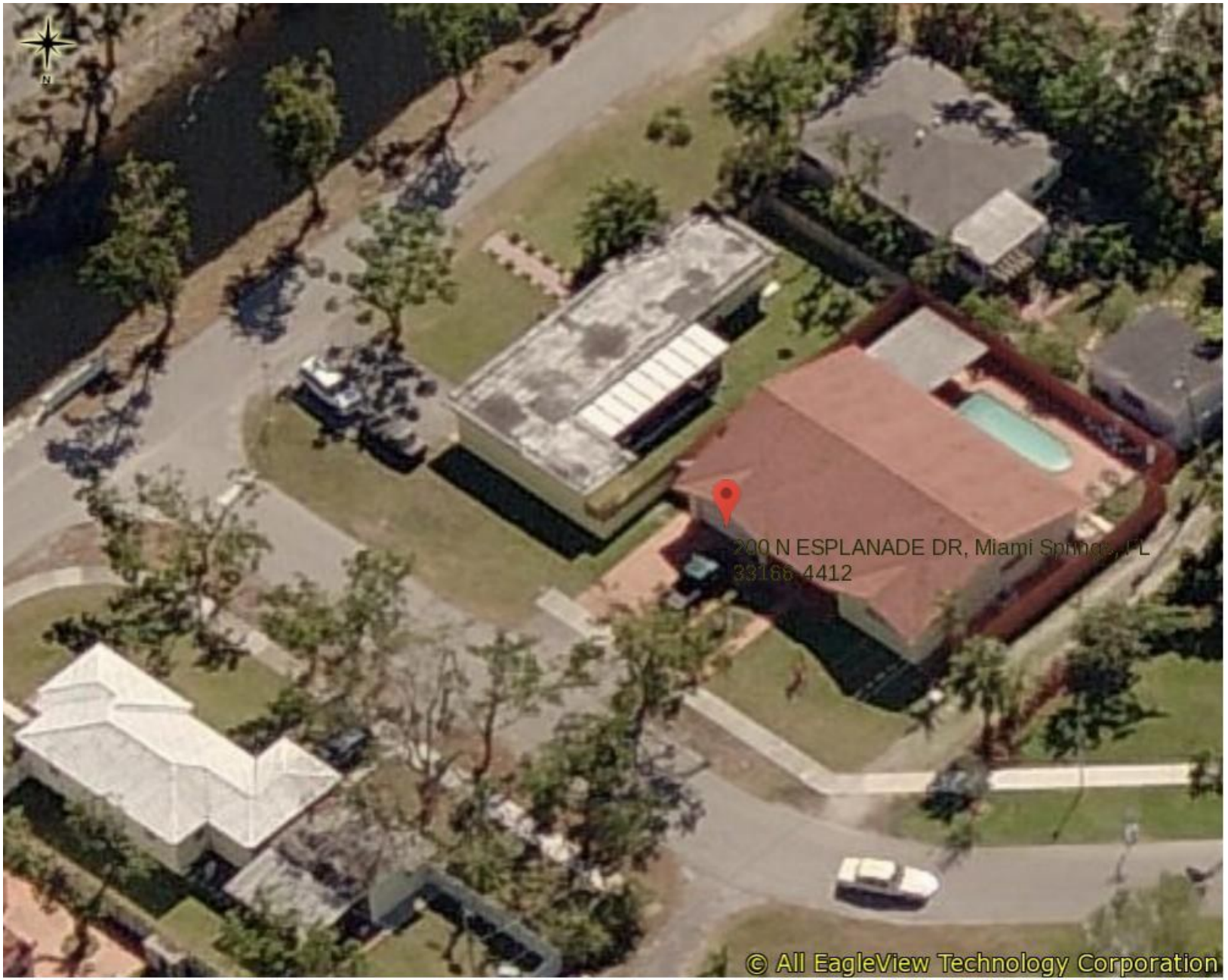

02/08/2006

Date Printed: 02/18/2025

Miami-Dade Property Appraiser

Property Address: 200 N ESPLANADE DR, Miami Springs, FL 33166-4412

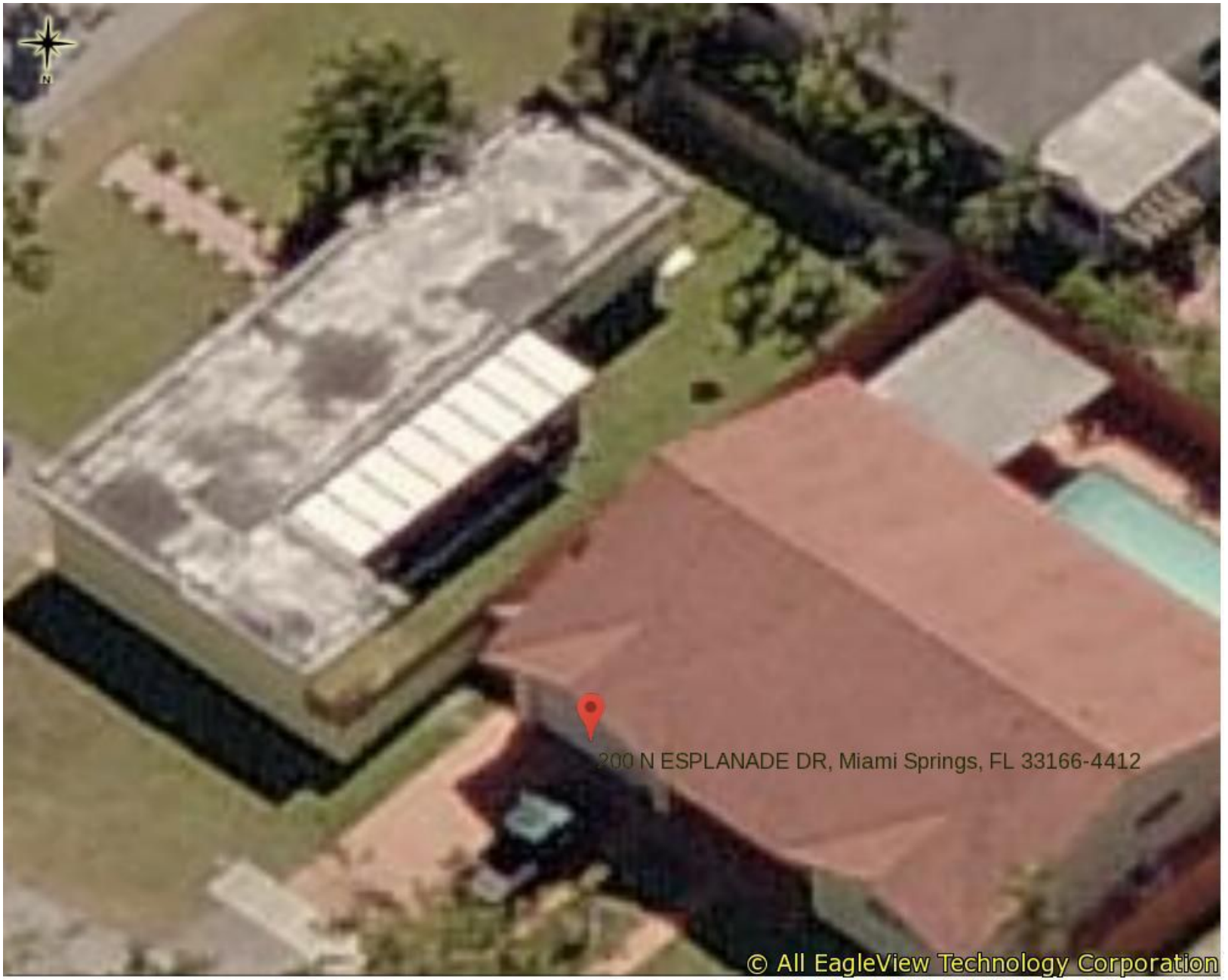

02/08/2006

Date Printed: 02/18/2025

Miami-Dade Property Appraiser

Property Address: 200 N ESPLANADE DR, Miami Springs, FL 33166-4412



01/06/2022

Date Printed: 11/11/2024

Miami-Dade Property Appraiser

Property Address: 200 N ESPLANADE DR, Miami Springs, FL 33166-4412

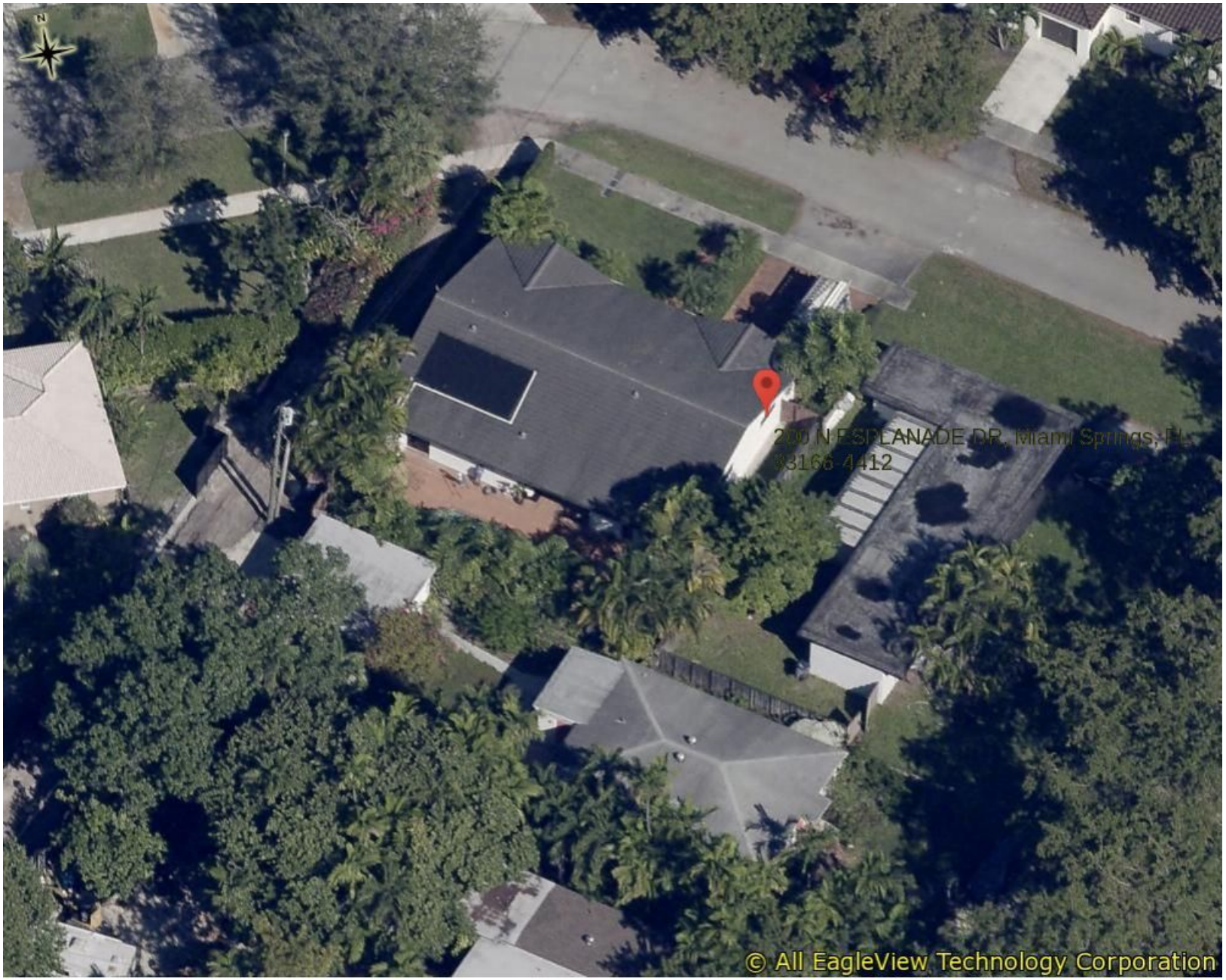

01/06/2022

Date Printed: 11/16/2024

Miami-Dade Property Appraiser

Property Address: 200 N ESPLANADE DR, Miami Springs, FL 33166-4412

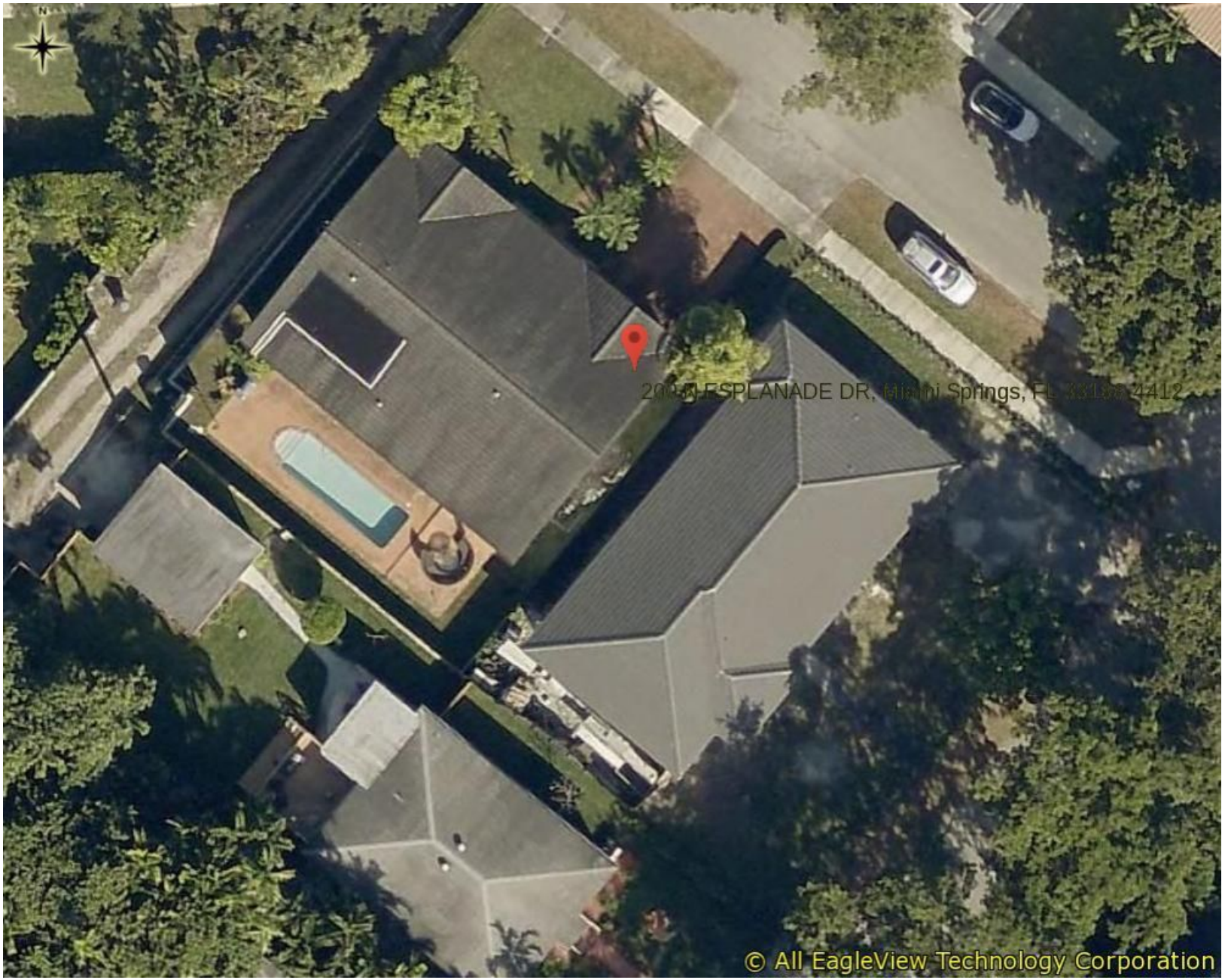

12/22/2024

Date Printed: 02/18/2025

Miami-Dade Property Appraiser

Property Address: 200 N ESPLANADE DR, Miami Springs, FL 33166-4412

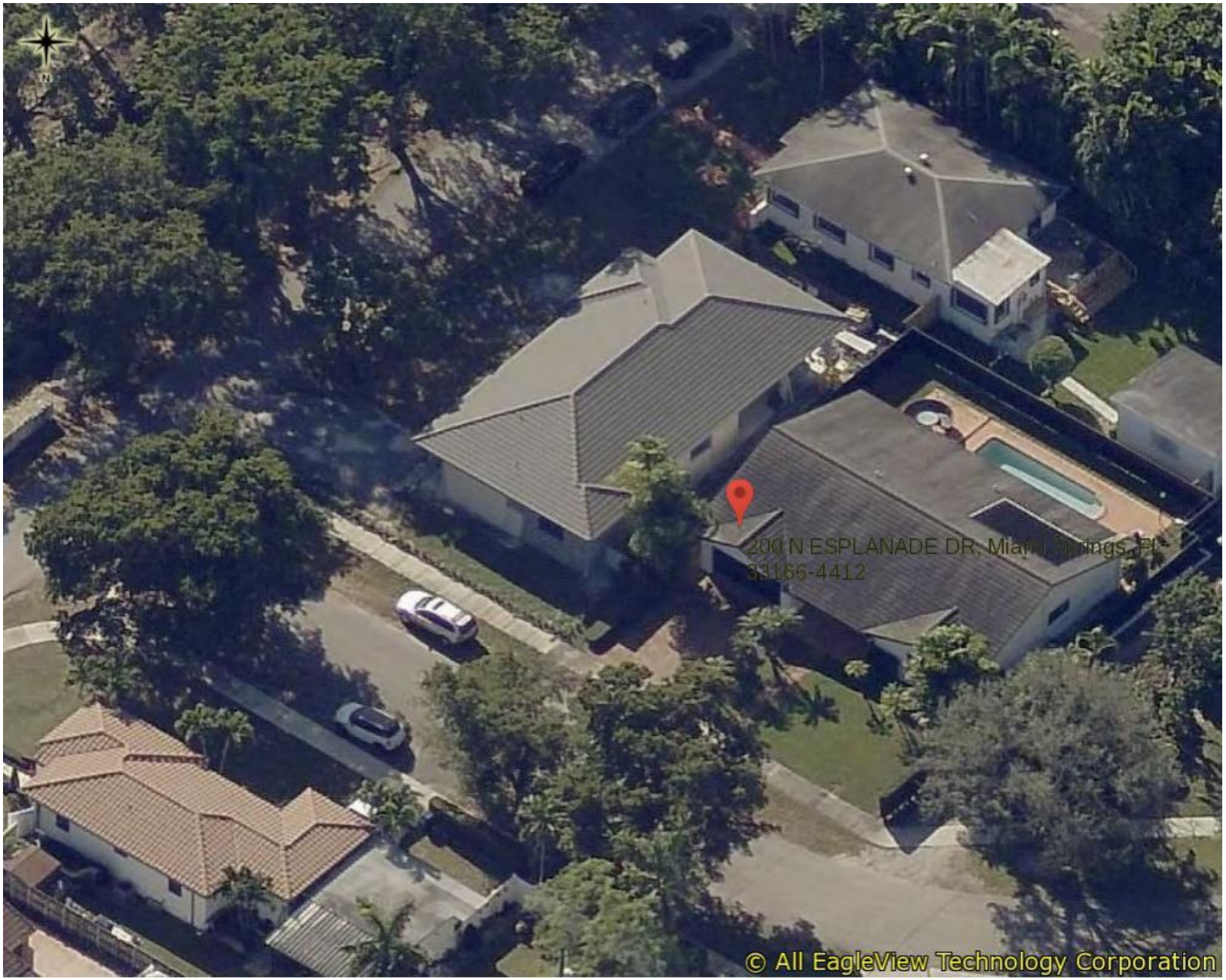

12/22/2024

Date Printed: 02/18/2025


January 2021


June 2024



January 2008



March 2011

CITY OF MIAMI SPRINGS
2007 APR -6 AM 11:42

April 6, 2007

James Borgmann
City Manager
Miami Springs

Thru means of this letter I am asking for your permission to put a 40 foot container in front of a house located at 200 N. Esplanade, for a period of 7 days from April 12, 2007 till April 19, 2007.

Thank you for your attention.

Allen Diaz

Request denied per City Mgr. J. B.

Case # 07-1098

.30

7GR 33135 REC 9233 PG1200

QUIT-CLAIM DEED

RAMCO FORM 8 '76 FEB 12 PM 2:12

05 3118-16-

This Quit-Claim Deed, *Executed this* 3rd *day of* February *A. D.* 1976, *by* ESTELLE FORDHAM, an unremarried widow

first party, to JOSEPH PATRICK BUSSEY and DOROTHY HAIRE BUSSEY, his wife

whose postoffice address is 533 Mokena Drive, Miami Springs, Florida 33166

second party:

(Wherever used herein the terms "first party" and "second party" shall include singular and plural, heirs, legal representatives, and assigns of individuals, and the successors and assigns of corporations, wherever the context so admits or requires.)

Witnesseth, *That the said first party, for and in consideration of the sum of* $ 10.00 *in hand paid by the said second party, the receipt whereof is hereby acknowledged, does hereby remise, release and quit-claim unto the said second party forever, all the right, title, interest, claim and demand which the said first party has in and to the following described lot, piece or parcel of land, situate, lying and being in the County of* Dade *State of* Florida, *to-wit:*

Lots 1 and 2 in Block 58 of CINEMA PARK ADDITION TO COUNTRY CLUB ESTATES, according to the Plat thereof, recorded in Plat Book 17, at Page 2 of the Public Records of Dade County, Florida.

200 N. Esplanade.

To Have and to Hold *the same together with all and singular the appurtenances thereunto belonging or in anywise appertaining, and all the estate, right, title, interest, lien, equity and claim whatsoever of the said first party, either in law or equity, to the only proper use, benefit and behoof of the said second party forever.*

In Witness Whereof, *The said first party has signed and sealed these presents the day and year first above written.*

Signed, sealed and delivered in presence of:

Lance McCeach

Estelle Fordham

Estelle Fordham, an unremarried widow

Fannie Mae Royal

STATE OF FLORIDA,
COUNTY OF Dade

I HEREBY CERTIFY that on this day, before me, an officer duly authorized in the State aforesaid and in the County aforesaid to take acknowledgements, personally appeared Estelle Fordham, an unremarried widow

to me known to be the person described in and who executed the foregoing instrument and she acknowledged before me that she executed the same.

WITNESS my hand and official seal in the County and State last aforesaid this 3rd day of February A. D. 1976.

Jennie B. Everett

My Commission Expires:
April 4, 1979

This Instrument prepared by: Estelle Fordham
1645 N. W. South River Drive

FILED IN OFFICIAL RECORDS BOOK OF DADE COUNTY, FLORIDA
RECORD VERIFIED
RICHARD P. BRINKER

WARRANTY DEED
STATUTORY
F.S. 689.02

REC 9233 R1205 76R 33134 33

RAMCO FORM 5 PHOTO

05 311 8-16-
'76 FEB 12 PM 2 14

This Indenture,

Made this 10th day of February, A. D. 1976, Between MARGARET WINDSOR EYRES, a single woman

of the County of Dade, in the State of Florida, party of the first part, and JOSEPH PATRICK BUSSEY and DOROTHY HAIRE BUSSEY, his wife

of the County of Dade, in the State of Florida, whose post office address is 533 Mokena Drive, Miami Springs, Florida 33166

parties of the second part.

Witnesseth, That the said party of the first part, for and in consideration of the sum of TEN DOLLARS AND OTHER GOOD AND VALUABLE CONSIDERATION-------- Dollars, to her in hand paid by the said parties of the second part, the receipt whereof is hereby acknowledged has granted, bargained, and sold to the said parties of the second part, their heirs and assigns forever, the following described land, situate, and being in the County of Dade, State of Florida, to wit:

Lots 1 and 2, in Block 58, of CINEMA PARK ADDITION TO COUNTRY CLUB ESTATES, according to the Plat thereof, recorded in Plat Book 17, at Page 2, of the Public Records of Dade County, Florida.

Subject to Purchase Money First Mortgage in the sum of $25,000.00 made by Grantees herein to Grantor herein.

Subject to reservations, easements, restrictions and conditions of record, if any. Subject to taxes for the year 1975 and subsequent years.

30,000

And the said party of the first part does hereby fully warrant the title to said land, and will defend the same against the lawful claims of all persons whomsoever.

In Witness Whereof, The said party of the first part has hereunto set her hand and seal the day and year first above written.

Signed, sealed and delivered in the presence of:

William M. Erich

Margaret Windsor Eyres L.S.
MARGARET WINDSOR EYRES

Emily H. Rush

OF DADE COUNTY, FLORIDA
RECORD VERIFIED L.S.
RICHARD P. BRINKER,
CLERK CIRCUIT COURT

STATE OF FLORIDA,
COUNTY OF DADE

I HEREBY CERTIFY that on this day, before me, an officer duly authorized in the State aforesaid and in the County aforesaid to take acknowledgments, personally appeared MARGARET WINDSOR EYRES, a single woman

to me known to be the person described in and who executed the foregoing instrument and she acknowledged before me that she executed the same.

WITNESS my hand and official seal in the County and State last aforesaid this 10th day of February, A. D. 1976.

My Commission Expires:

[illegible]
My Commission [illegible] 1977
Bonded [illegible]

William M. Erich
Notary Public, State of Florida

This Instrument prepared by: WILLIAM [illegible]
ATTORNEY AT LAW

JAMES BORGMANN
CITY MANAGER
MIAMI SPRINGS

FAX COVER SHEET

ACEBO ROOFING CORP.
4305 E. 10th Lane
Hialeah, FL 33013
Ph: (305) 685-2534
Fx: (305) 687-5526

Send to:	MIAMI SPRINGS	From:	YUNI
Attention:		Date:	8/5/2004
Fax #:	305.805.5036	Phone #:	305.685.2534

Total pages, including cover sheet: 4

Comments:

ATTACHED IS A REQUEST FOR HISTORY OF A HOUSE.
IF ANY QUESTIONS DON'T HESITATE TO CALL US AT
305.685.2534

NO RECORDS FOUND
OF ANY FIRE OR OTHER
DAMAGE TO ROOF.

8/5/04 LMTCB YUNI
11:25 AM

08/04/04 08:05am P.001

REQUEST

I WOULD LIKE TO REQUEST THE HISTORY OF A HOUSE THAT ACEBO ROOFING WORKED ON. ACEBO ROOFING HAS GONE TO THE HOUSE AND DOESN'T FIND EXPLANATION OF THE ROOF PROBLEM. AS OF WE WOULD LIKE TO PULL THE FILE AND RESEARCH ABOUT PREVIOUS INCIDENTS REGARDING THE HOUSE.

HOUSE INFO NEEDED

ADDRESS: 200 N ESPLANADE DRIVE
CONTACT: MARTA DIAZ
PHONE : 305.888.4219

ACEBO ROOFING

ADDRESS: 4305 E 10 LANE
PHONE: 305.685.2534
FAX: 305.687.5526

08/04/04 08:08am P. 002

STATE OF FLORIDA

SS:

COUNTY OF MIAMI-DADE

AFFIDAVIT OF SERVICE

BEFORE ME, the undersigned authority, personally appeared

JOSEPH CARDINI, who being duly sworn

by me, deposed and stated as follows:

1. That the Affiant is employed by the City of Miami Springs.

2 That on the 11 day of Nov., 2000,

the Affiant personally posted the aforesaid original **RED TAG**

(STOP WORK ORDER) for such work as INSTALLING

FRONT DOOR.

at 200 N ESPLANADE, at 1:10

o'clock in the AM/PM.

3. That I hereby certify that the foregoing is true and correct.

DATE COMPLIED 11/28/00

EXECUTED this 11 day of Nov., 2000.

Affiant

SWORN TO AND SUBSCRIBED

BEFORE ME THIS 13 DAY OF Nov, 2000.

Notary Public, State of Florida
At Large

OFFICIAL NOTARY SEAL
TANIA M GONZALEZ
NOTARY PUBLIC STATE OF FLORIDA
COMMISSION NO. CC608903
MY COMMISSION EXP. DEC. 17,2000

PHOTO SHOWING POSTING

9-130

OWNER PUT BACK OLD DOOR.



CITY OF MIAMI SPRINGS, FLORIDA

~~BUILDING~~ PERMIT APPLICATION

MECH.

89 AUG 9 PM 12:12

DATE 8-09-89 CITY OF MIAMI SPRINGS Tele # 888-9641 Permit No. M-104 89

(This application must be submitted by two (2) sets of plans and specifications)

Application is hereby made for approval of the detailed statement of plans for the building, or other structure, herein described. The Applicant hereby agrees that all provisions of the Laws of the State of Florida and all Ordinances of the City of Miami Springs, Florida, will be complied with.

Owner's Name & Address MARTA DIAZ

Street & Number where work is to be done 200 N SPLANADE Dr. (888429)

Architect

Name & Address of Contractor/Builder ALL AMERICA A/C

Location & Legal Description of lot to be built on:

Lot Block Subdivision

Purpose of Building: House Multi Family Commercial No. of Stories

New Building Remodeling Addition ~~Repairs~~ REPLACE CONDENSOR

To be constructed of: Kind of Foundation Roof Covering

Distance to next nearest building Size of building lot

I HEREBY SWEAR OR AFFIRM, THAT THE FACTS STATED HEREON ARE TRUE:

LICENSE(S) NO. CAC0 039648

INSURANCE METRO: 1668129 *INS 12/89

The City follows Section 301 of the SOUTH FLORIDA BUILDING CODE.

Signature of Applicant RICHARD RAFUS

FAILURE TO COMPLY WITH MECHANICS LIEN LAW CAN RESULT IN THE PROPERTY OWNER PAYING TWICE FOR BUILDING PERMITS.

MIN. FEE $~~25.00~~

Change-Out

DO NOT USE THIS SPACE

Floor Area sq. ft.	2 1/2 TON
Est. cost sq. ft.	
Est. Total cost	$750.00
Bldg. Permit fee	
Bond	
Total	$30.00

Approved: Jamie McHugh MECH ~~Building~~ Inspector

Approved: Plumbing Inspector

Approved: Electrical Inspector

This space represents the lot, indicate the building in space showing the distance from lot lines and other buildings, etc.

A/C REPLACEMENT

CONDENSER UNIT ONLY

NO HEATER

Antonio J. Soto, III
Attorney at Law
Interamerican Federal Building
9192 Coral Way, Suite 205
Miami, Florida 33165
(305) 227-2700

84 DEC 10 A8:39

CITY OF MIAMI SPRINGS

December 6th, 1984

Mr. David Wells,
Building Official
City of Miami Springs
Building Department
201 Westward Drive
Miami Springs, Florida 33166

RE: 200 N. Esplanade Drive, Miami Springs, Florida
Lots 1 & 2, Block 58, CINEMA PARK ADDITION to
COUNTRY CLUB ESTATES, PB 17, PG 2.

Dear Mr. Wells:

Enclosed please find photocopy of my letter dated November 15th, 1984, together with attachments, which is self explanatory. It is my understanding after having spoken with Joan (I may have the wrong name, may be Jo or Jean), that you had spoken with Mr. Tony Toledo of Dade County Public Works and that this matter would be corrected to the satisfaction of the County.

Please advise the undersigned as to whether or not this matter has already been taken care of and when can I receive the corrected instruments (documents) to record the Waiver of Plat to the satisfaction of the Dade County Authorities.

Thanking in advance for your cooperation and awaiting your reply, I remain,

Yours very truly,

Antonio J. Soto, III

AJS/hs
ENCL.

Antonio J. Soto, III
Attorney at Law
Interamerican Federal Building
9192 Coral Way, Suite 205
Miami, Florida 33165
(305) 227-2700

November 15th, 1984

Mr. David Wells
Building Official
City of Miami Springs
Building Department
201 WEstward Drive
Miami Springs, Florida 33166

RE: 200 N. Esplanade Drive, Miami Springs, Florida
Lots 1 & 2, Block 58, CINEMA PARK ADDITION to
COUNTRY CLUB ESTATES, PB 17, PG 2.

Dear Mr. Wells:

Enclosed please find photocopies of letter dated October 18th, 1984 and Memorandum dated August 13th, 1984 concerning the Re-Platting of the subject property.

Please be advised that we tried to record same with the Clerk of the Court, Recording Division, Dade County Courthouse and were advised by Mr. Anthony Toledo of the Dade County Public Works Department, telephone number 579-2958, that in order to record the memo and re-plat of the lots, you must inform the County that you have a professional surveyor in your Building and Zoning Department, of his name and qualifications. It is not until then that the Official O.K. by the County of Dade will be given to file the re-pltting of the lots with the Registry. Please feel free to call upon the undersigned for anything I can do in this matter. Thanking you in advance for your help and cooperation, I remain,

Yours very truly;

Antonio J. Soto, III
Attorney at Law
AJS/hs

Public Works
579-2958 Tony Toledo

CITY OF MIAMI SPRINGS

MEMORANDUM

To: To Whom It May Concern Date: 13 August 1984

From: Dave Wells

Re: 200 N. Esplanade Dr.

Waiver of Plat has been prepared, changing Lots 1 & 2, Block 58, Cinema Park Addition to County Club Estates, from 1 & 2 to 1A & 2A respectively.

An endorsement attesting to this change has been entered on to the face of two current surveys. Date and signature and Seal will be affixed after completion of demolition permit attached.

Use of the underground(s') easement across the rear of Lot 2A is shown in dotted lines.

Utility companies and documents supporting this change authorization, are deposited in the Bussey-Jackson-Zahn file in the Building and Zoning Department, City Hall, 201 Westward Dr., Miami Springs, FL.

Dave Wells
Building Official

DW/jd

Procedure: Miami Springs Code of Ordinances, Sections 150, 151 & 152. Property Reference: 200 N. Esplanade and 300 Falcon Avenue.

City of MIAMI SPRINGS Florida

BUILDING AND ZONING DEPARTMENT
201 WESTWARD DRIVE
MIAMI SPRINGS, FL 33166

TELEPHONE
(305) 885-4581

18 October 1984

To Whom It May Concern:

The following deed, legal description, and survey describe two buildable lots 75' x 100'; N.E. and S.E. 1/2 of lots 1 & 2, Block 58, Cinema Park Addition to Country Club Ests., a/k/a 300 Falcon Avenue and 200 N. Esplanade Drive, Miami Springs, FL (33166).

Original lots 1 & 2, forming a parcel of 150' x 100' have been resubdivided into two buildable lots measuring 75' x 100' each; the N.E. portion is improved, the S.E. portion is vacant.

Yours truly,

Dave Wells

Dave Wells
Building Official

DW/jd
Encls.: Two Surveys showing Waiver of Plat and Deed of Ownership.

157.00

1984 NOV 15 AM 9:50

84R346656

OFF REC 12328 PG 1000

DEED, WARRANTY
STATUTORY

RAMCO FORM S

This Indenture,

Made this 14th *day of* November *, A. D. 19*84 .

Between IRVING H. ZAHN, a married man

of the County of Dade *, in the State of* Florida *,*
part y *of the first part, and*

JOSE SANTANA and AIDA C. SANTANA, his wife
200 Esplanade, Miami Springs, Florida
of the County of Dade *, in the State of* Florida *,*
part ies *of the second part,*

Witnesseth: *That the said part* y *of the first part, for and in consideration of the sum of* TEN ($10.00) *Dollars, to* him *in hand paid by the said part* ies *of the second part, the receipt whereof is hereby acknowledged,* does *granted, bargained and sold to the said part* ies *of the second part,* their *heirs and assigns forever, the following described land, situate, lying and being in the County of* Dade *,State of* Florida *to-wit:*

The Northwesterly Half (½) of Lots 1 and 2 in Block 58 of CINEMA PARK ADDITION TO THE COUNTRY CLUB ESTATES, according to the Plat thereof, as recorded in Plat Book 17, at Page 2, of the Public Records of Dade County, Florida.
SUBJECT TO TAXES FOR THE YEAR 1984 and subsequent.
GRANTOR HEREBY WARRANTS THAT SUBJECT PROPERTY IS NOT HIS HOMESTEAD NOR ADJACENT TO IT AND THAT HE RESIDES ELSEWHERE IN THE STATE OF FLORIDA.

$ 157.00 Documentary Stamps Collected
Dade County
Richard P. Brinker
Clerk, Circuit & County Courts
By John A. Pratt DC 11/15/84

And the said part y *of the first part do* es *hereby fully warrant the title to said land, and will defend the same against the lawful claims of all persons whomsoever.*

In Witness Whereof, *The said part* y *of the first part* has *hereunto set* his *hand and seal the day and year first above written.*

Signed, sealed and delivered in presence of us

IRVING H. ZAHN, a married man (L.S.)

This Instrument prepared by: ANTONIO J. SOTO, III, ESQ.
Address 9192 Coral Way, Suite 205
Miami, Florida 33165

Per Atty 9.00

OFF REC 12328 PG 1001

State of Florida
County of Dade

I Hereby Certify, *That on this day, before me, an officer duly authorized in the State aforesaid and in the County aforesaid to take acknowledgments, personally appeared*

IRVING H. ZAHN, a married man

to me known to be the person described in and who executed the foregoing instrument and he *acknowledged before me that* he *executed the same.*

Witness *my hand and official seal in the County and State last aforesaid this* 14th *day of* November *, A. D. 19* 84.

Notary Public,
My commission expires

ANTONIO J. SOTO NOTARY PUBLIC STATE OF FLORIDA

RECORDED IN OFFICIAL RECORDS BOOK OF DADE COUNTY, FLORIDA.
RECORD VERIFIED
RICHARD P. BRINKER
CLERK CIRCUIT COURT

Warranty Deed

RAMCO FORM S

To

Date

Abstract of Description

1984 NOV 12 AM 9:20

Antonio J. Soto, III
Attorney at Law
Interamerican Federal Building
9192 Coral Way, Suite 205
Miami, Florida 33165
(305) 227-2700



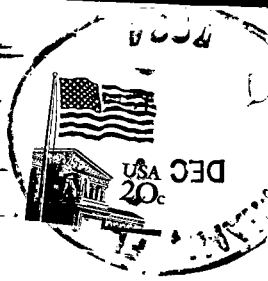

Mr. David Weels
Building Official
City of Miami Springs
201 Westward Drive
Miami Springs, Florida 33166

City of MIAMI SPRINGS Florida

BUILDING AND ZONING DEPARTMENT
201 WESTWARD DRIVE
MIAMI SPRINGS, FL 33166

TELEPHONE
(305) 885-4581

November 27, 1984

Antonio J. Soto, III, Esq.
Interamerican Federal Building
9192 Coral Way, Suite 205
Miami, Florida 33165

Re: 200 N. Esplanade Drive, Miami Springs, FL;
Lots 1 & 2, Block 58, Cinema Park Addition

Dear Sir:

Your letter of November 21, 1984, has been received, and the difficulty with recording a survey has been noted.

Please record the Deed of Mr. Santana as owner and file with the survey endorsed "Waiver of Plat".

An application for permit to build one single family dwelling on the lot measuring 75' x 100' will be approved when presented.

All requirements for the Building & Zoning Department zoning and regulations have been met. Thanks for your patience and persistence in following these details.

Yours truly,

Dave Wells

Dave Wells
Director of Building & Zoning

DW/jd
Enc.

P.S. My best regards to Mr. Santana

Reference: Miami Springs Code of Ordinances,
Section 150.19 & 150.20

Antonio J. Soto, III
Attorney at Law
Interamerican Federal Building
9192 Coral Way, Suite 205
Miami, Florida 33165
(305) 227-2700

WRITE PROCEDURE MAP TOPO S.

84 NOV 21 A10:06

CITY OF MIAMI SPRINGS

Mr. David Wells
Building Official
City of Miami Springs
Building Department
201 WEstward Drive
Miami Springs, Florida 33166

RE: 200 N. Esplanade Drive, Miami Springs, Florida
Lots 1 & 2, Block 58, CINEMA PARK ADDITION to
COUNTRY CLUB ESTATES, PB 17, PG 2.

Dear Mr. Wells:

Enclosed please find photocopies of letter dated October 18th, 1984 and Memorandum dated August 13th, 1984 concerning the Re-Platting of the subject property.

Please be advised that we tried to record same with the Clerk of the Court, Recording Division, Dade County Courthouse and were advised by Mr. Anthony Toledo of the Dade County Public Works Department, telephone number 579-2958, that in order to record the memo and re-plat of the lots, you must inform the County that you have a professional surveyor in your Building and Zoning Department, of his name and qualifications. It is not until then that the Official O.K. by the County of Dade will be given to file the re-pltting of the lots with the Registry. Please feel free to call upon the undersigned for anything I can do in this matter. Thanking you in advance for your help and cooperation, I remain,

Yours very truly,

Antonio J. Soto, III
Attorney at Law
AJS/hs

City of MIAMI SPRINGS Florida

BUILDING AND ZONING DEPARTMENT
201 WESTWARD DRIVE
MIAMI SPRINGS, FL 33166

TELEPHONE
(305) 885-4581

18 October 1984

To Whom It May Concern:

The following deed, legal description, and survey describe two buildable lots 75' x 100'; N.E. and S.E. 1/2 of lots 1 & 2, Block 58, Cinema Park Addition to Country Club Ests., a/k/a 300 Falcon Avenue and 200 N. Esplanade Drive, Miami Springs, FL (33166).

Original lots 1 & 2, forming a parcel of 150' x 100' have been resubdivided into two buildable lots measuring 75' x 100' each; the N.E. portion is improved, the S.E. portion is vacant.

Yours truly,

Dave Wells

Dave Wells
Building Official

DW/jd
Encls.: Two Surveys showing Waiver of Plat and Deed of Ownership.

Public Works.
579-2958 Tom Toledo

CITY OF MIAMI SPRINGS

MEMORANDUM

To: To Whom It May Concern Date: 13 August 1984

From: Dave Wells

Re: 200 N. Esplanade Dr.

Waiver of Plat has been prepared, changing Lots 1 & 2, Block 58, Cinema Park Addition to County Club Estates, from 1 & 2 to 1A & 2A respectively.

An endorsement attesting to this change has been entered on to the face of two current surveys. Date and signature and Seal will be affixed after completion of demolition permit attached.

Use of the underground(s') easement across the rear of Lot 2A is shown in dotted lines.

Utility companies and documents supporting this change authorization, are deposited in the Bussey-Jackson-Zahn file in the Building and Zoning Department, City Hall, 201 Westward Dr., Miami Springs, FL.

Dave Wells
Building Official

DW/jd

Procedure: Miami Springs Code of Ordinances, Sections 150, 151 & 152. Property Reference: 200 N. Esplanade and 300 Falcon Avenue.

Zoning Dept

City of MIAMI SPRINGS Florida

BUILDING AND ZONING DEPARTMENT
201 WESTWARD DRIVE
MIAMI SPRINGS, FL 33166

TELEPHONE
(305) 885-4581

18 October 1984

To Whom It May Concern:

The following deed, legal description, and survey describe two buildable lots 75' x 100'; N.E. and S.E. 1/2 of lots 1 & 2, Block 58, Cinema Park Addition to Country Club Ests., a/k/a 300 Falcon Avenue and 200 N. Esplanade Drive, Miami Springs, FL (33166).

Original lots 1 & 2, forming a parcel of 150' x 100' have been resubdivided into two buildable lots measuring 75' x 100' each; the N.E. portion is improved, the S.E. portion is vacant.

Yours truly,

Dave Wells

Dave Wells
Building Official

DW/jd
Encls.: Two Surveys showing Waiver of Plat and Deed of Ownership.

308

1985 MAR -4 PM 1:48 85R062731

OFF. REC. 12431 PG 2385

05-3118-16

WARRANTY DEED

THIS WARRANTY DEED executed the 11th day of February, 1985, between IRVING H. ZAHN whose address is 78 CANAL ST. MIAMI SPRINGS FLA. 33166, hereinafter called the Grantor, to JACK V. PARRISH and BETTY JO PARRISH, his wife and JOHN A. PARRISH, a single man whose address is 265 NAVARRE DRIVE, MIAMI SPRINGS, FLA. 33166, hereinafter called the Grantee.

W I T N E S S E T H:

That said Grantor, for and in consideration of the sum of Ten and No/Dollars ($10.00), and other good and valuable considerations to said Grantor in hand paid by said Grantee, the receipt whereof is hereby acknowledged, has granted, bargained and sold to the said Grantee, and Grantee's successors and assigns forever, the following described land, situate, lying, and being in Dade County, Florida to-wit:

Southeasterly 1/2 of Lots 1 and 2, Block 58, CINEMA PARK ADDITION TO THE COUNTRY CLUB ESTATES, according to the Plat thereof, recorded in Plat Book 17, Page 2, of the Public Records of Dade County, Florida.

68500

recorded 5/85 Smc

308.25 Documentary Stamps Collected
Dade County
Richard P. Brinker
Clerk, Circuit & County Courts
R. Robinson 3-4-85

TOGETHER with all the tenements, hereditaments, and appurtenances thereto belonging or in anywise appertaining.

TO HAVE AND TO HOLD the same in fee simple forever.

AND the Grantor hereby covenants with said Grantee that the Grantor is lawfully seized of said land in fee simple; that the Grantor has good right and lawful authority to sell and convey said land; that the Grantor hereby fully warrants the title to said land and will defend the same against the lawful claims of all persons whomsoever; and that said land is free of all encumbrances, except taxes accruing subsequent to December 31, 1984.

IN WITNESS WHEREOF, the said Grantor has signed and sealed these presents the day and year first above written.

Signed, sealed and delivered in the presence of:

D J Wiser
Witness

Debbie Martend
Witness

Irving H. Zahn
IRVING H. ZAHN

RECORD AND RETURN TO:
LaCAPRA & WISER
Attorneys at Law
SUITE 620
10800 BISCAYNE BLVD.
MIAMI, FL 33161

STATE OF FLORIDA)
SS:
COUNTY OF DADE)

I HEREBY CERTIFY that on this day before me, an officer duly qualified to take acknowledgments, personally appeared IRVING H. ZAHN, to me known to be the person described in and who executed the foregoing instrument and acknowledged before me that he executed the same.

WITNESS my hand and official seal in the County and State last aforesaid this 11th day of February, 1985.

D J Wiser
NOTARY PUBLIC, State of Florida

My Commission Expires: NOTARY PUBLIC STATE OF FLORIDA
MY COMMISSION EXP JUNE 20,1988
BONDED THRU GENERAL INS. UND.

D J WISER NOTARY PUBLIC STATE OF FLORIDA

THIS INSTRUMENT PREPARED BY:

DANIEL J. WISER, ESQUIRE
LaCAPRA & WISER
Suite 620
10800 Biscayne Blvd.
Miami, Fla. 33161

RECORDED IN OFFICIAL RECORDS BOOK OF DADE COUNTY, FLORIDA.
RECORD VERIFIED
RICHARD P. BRINKER
CLERK CIRCUIT COURT

CITY OF MIAMI SPRINGS, FLORIDA

BUILDING PERMIT APPLICATION

HOMEOWNER

3118-16-159

DATE 9/7/84 (8/28/84) Tele # 888-8404 Permit No. B-415 ✓

Demo.

(This application must be submitted by two (2) sets of plans and specifications)

Application is hereby made for approval of the detailed statement of plans for the building, or other structure, herein described. The Applicant hereby agrees that all provisions of the Laws of the State of Florida and all Ordinances of the City of Miami Springs, Florida, will be complied with.

Owner's Name & Address FAY ZADA (JACKSON)

Street & Number where work is to be done 200 ESPLANADE

Architect NO

Name & Address of Contractor/Builder NO

Location & Legal Description of lot to be built on:

Lot 1 & 2 Block 58 Subdivision Cinema Pk

Purpose of Building: House ____ Multi Family ____ Commercial ____ No. of Stories ____

New Building ____ Remodeling ____ Addition ____ Repairs ____

To be constructed of: Kind of Foundation ____ Roof Covering ____

Distance to next nearest building ____ Size of building lot ____

I HEREBY SWEAR OR AFFIRM, THAT THE FACTS STATED HEREON ARE TRUE.

LICENSE(S) NO. ____

The City follows Section 304.5.6.7 of the SOUTH FLORIDA BUILDING CODE. 1,000

X ____
Signature of Applicant

FAILURE TO COMPLY WITH MECHANICS LIEN LAW CAN RESULT IN THE PROPERTY OWNER PAYING TWICE FOR BUILDING PERMITS.

SURVEY ATTACHED.

DO NOT USE THIS SPACE

Floor Area sq. ft.	0
Est. cost sq. ft.	
Est. Total cost	
Bldg. Permit fee	
Bond	
Total	20.00

Approved: ____ Building Inspector

Approved: ____ Plumbing Inspector

Approved: ____ Electrical Inspector

ALL PERMITS MUST BE PICKED UP IN PERSON.

This space represents the lot, indicate the building in space showing the distance from lot lines and other buildings, etc.

"partial" DEMOLITION OF ACCESSORY BLDG. and REAR YARD STRUCTURES TO PROVIDE SETBACKS.

(Orig.) White — OFFICE
(Dupl.) Canary — AUDITOR'S COPY
(Tripl.) Pink — CONTRACTOR'S COPY

MIN. FEE: $20.00

A F F I D A V I T

Date _____

City of Miami Springs
Building and Zoning Department
201 Westward Drive
Miami Springs, Florida 33166

In making application for a Building Permit for constructing a building, remodeling, making repairs, or adding an addition at this address: Demo. : accessory Bldg.

which is zoned: _____

I agree that this structure will be used in accordance with the Zoning classification.

/ss/ _____
PROPERTY OWNER

SWORN TO AND SUBSCRIBED BEFORE ME,

This 6th day of Sept., 1984.

_____
Notary Public State of Florida

My Commission expires:

Reference: Miami Springs Code of Ordinances:
#184 of 2-8-1954 and
#224 of 5-26-1958.

NOTE: SEE DOCUMENTS IN BUSSEY-JACKSON - ZONING FILE.

CITY GAS COMPANY OF FLORIDA

955 EAST 25th STREET / HIALEAH, FLORIDA 33013 / PHONE (305) 691-8710

August 20, 1984

Mr. Irvin Zahn
Zahn Realty
78 Canal Street
Miami Springs, FL. 33166

Re: Proposed six foot ~~(6')~~ 5' (REAR) Utility easement in lots 1 & 2, block 58 of Cinema Park Add. to Country Club Estates

Dear Mr. Zahn:

Enclosed is a copy of survey sketch which shows a proposed six foot ~~(6')~~ 5' (REAR) utility easement in above captioned project area.

This easement should be consistant with Florida Power and Light's request and should be ample room to accomodate both utility companies.

Thank you for your time and consideration on this matter and if you have any questions or require additional information, please contact me at our Operations Department at 691-8710.

Very truly yours,
City Gas Company of Florida

8/27
8/28

Don Means
Assistant Vice President
Director of Operations

Enclosure

DM/lg

J.H. MANUCY, INC.

PROFESSIONAL LAND SURVEYORS

4694 Palm Avenue, Suite 203 • Hialeah, Florida 33012
DADE: (305) 821-1281 • (305) 821-1220 BROWARD: (305) 563-2066

I HEREBY CERTIFY THAT THIS PLAT OF SURVEY WAS PREPARED UNDER MY DIRECTION; THAT IT MEETS THE MINIMUM TECHNICAL STANDARDS FOR LAND SURVEYING IN THE STATE OF FLORIDA (CHAPTER: 21HH-6 FLORIDA ADMINISTRATIVE CODE) FOR THE TYPE OF SURVEY SHOWN HEREON AND IS TRUE AND CORRECT TO THE BEST OF MY KNOWLEDGE AND BELIEF.

J.H. Manucy, Professional Land Surveyor #1128
John P. Pulice, Professional Land Surveyor #2681

State of Florida Date. September 1, 1983

BOUNDARY SURVEY

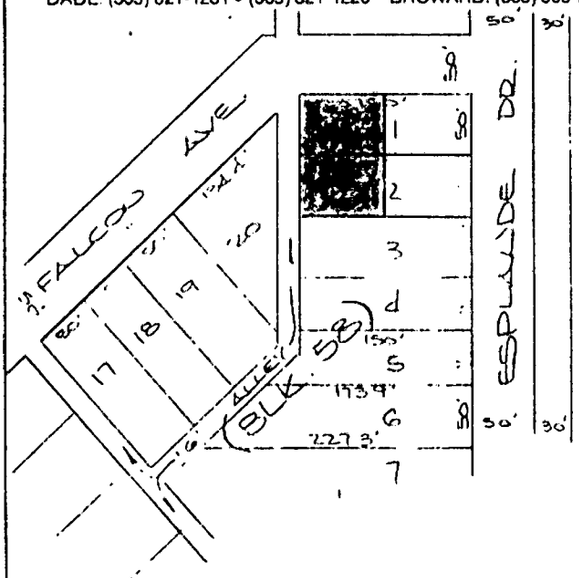

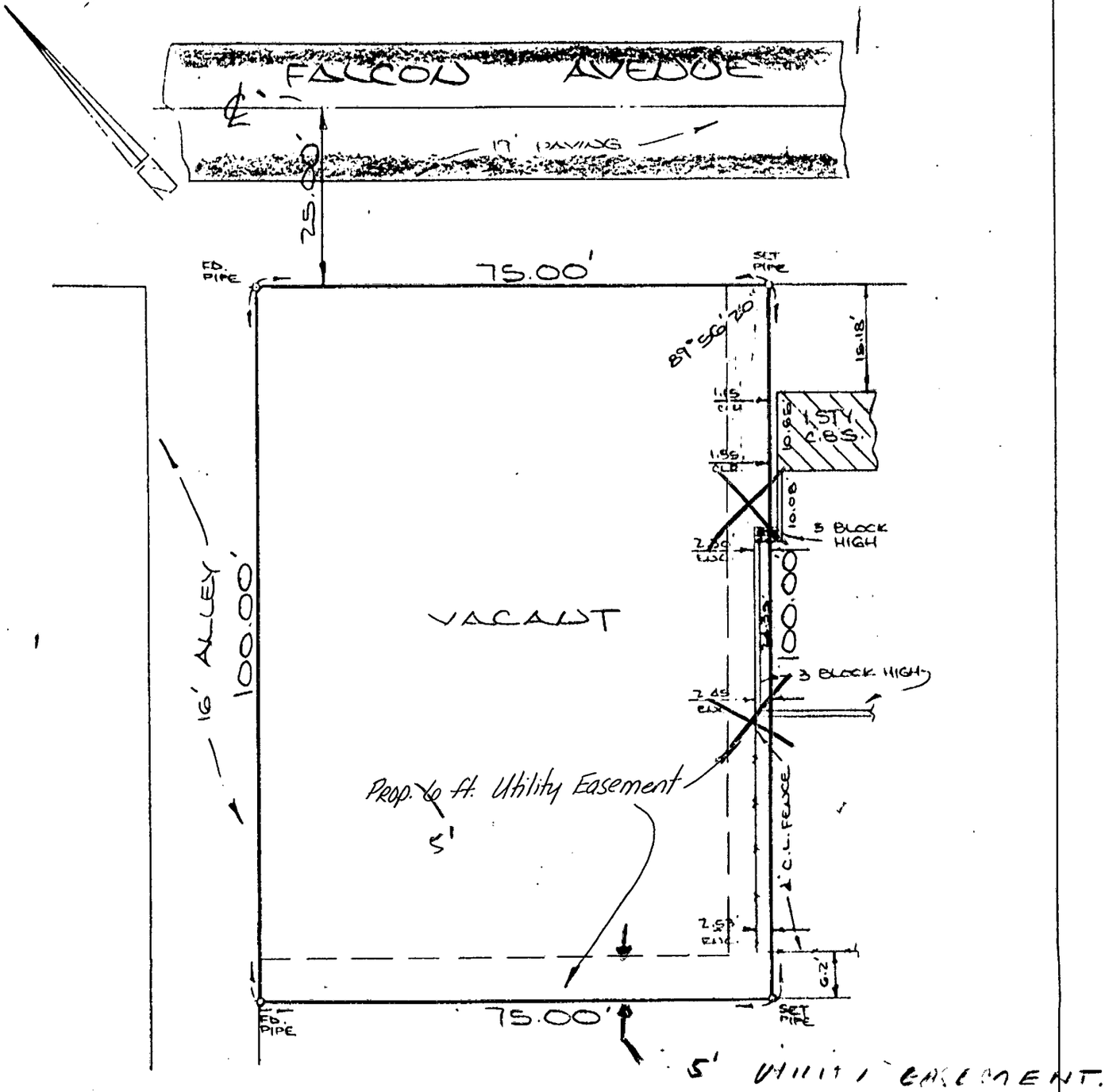

The Northwesterly ½ of Lots 1 & 2, Block 58 of CINEMA PARK ADDITION TO COUNTRY CLUB ESTATES
as recorded in Plat Book 17 at Page 2 according to the Plat thereof of the Public Records of Dade County, Florida.

FOR: Thomas W. Jackson DATE: August 31, 1983

SCALE: 1" = 20' ORDER No. 27237 F.B. A152-49 REV.

REV.

LOCATIONS AND ELEVATIONS OF OTHER UTILITIES WERE OBTAINED FROM THE BEST INFORMATION AVAILABLE BUT MAY NOT BE EXACTLY AS SHOWN. DIG WITH CAUTION

TLM DATA

LOC'N.	TX/LAT LOC. NO.
1	8-6659-8641-0-9

NAME OF GAS CO. CITY GAS CO.
SERIAL No. 84-10163
DATE OF REQUEST 7-24-84
PHONE 691-8710 ext. 147
GAS IN VICINITY. YES XX NO
NAME OF GAS REP. RONDA LAMB

48 HOURS PRIOR TO STARTING CONSTRUCTION, CONTACT THE FOLLOWING UTILITIES TO MARK FIELD LOCATIONS OF BURIED FACILITIES.

CITY GAS CO.	691-8710 x 147
SBT&T	264-6820
MIAMI SPGS WATER	885-6104

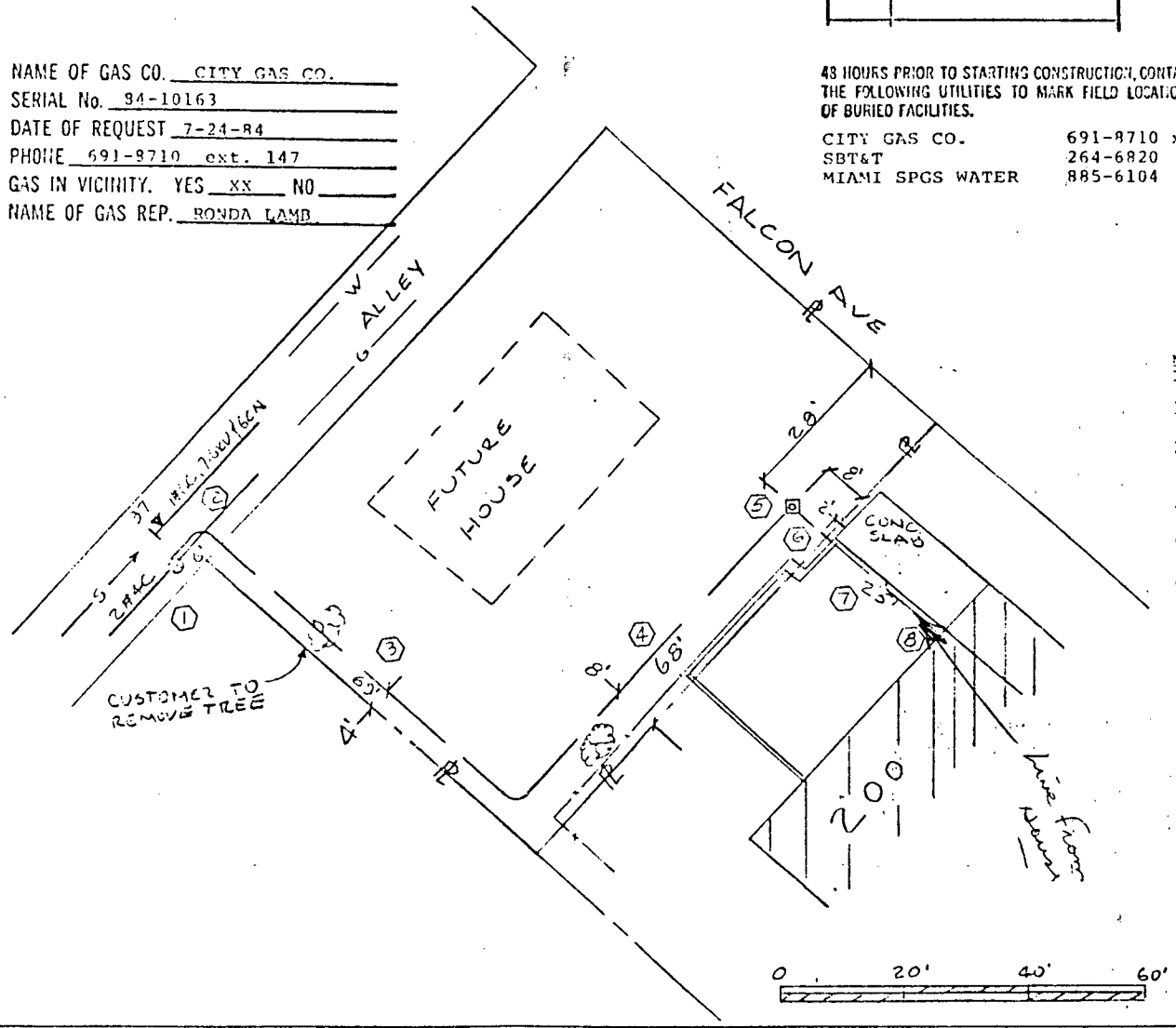

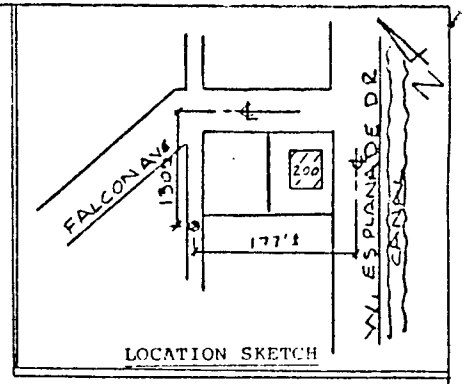

NOTES

1.- Frame pole @ loc'n 1 similar to UH-5 EDS, install 2" RSR. on W side of pole.
2.- At loc'n 2,3&4 pull 4/0 A. TPX, 600 v thru 2" PVC, 36" min. cover.
3.- At loc'n 5 install 20" round H.H.
4.- At loc'n 6 install 2" PVC connecting to customer's from loc'n 7, 24" min. cover.
5.- At loc'n 6,7&8 pull 1/0 A. TPX 600v thru 2" PVC.
6.- At loc'n 7 customer to install PVC.

EASEMENT STAKES AS BUILT REQ'D

SHEET 1/2

NO.	DATE	REVISION	BY	CHK.	APP.

DRAWN BY JAG
CHECKED BY JP
CORRECT

Easement Req'd. Yes ☒ No ☐	Survey. Stakes Req'd. Yes ☒ No ☐	Telephone Request	Trench Feet + 143'
Tree Work Required Yes ☐ No ☒	Permission Required Yes ☐ No ☒	Yes ☐ No ☒	Duct Bank Feet 0
Map Posting Req'd. Yes ☐ No ☒	Posted by		
Permit Required NONE			

Cable Feet	600V	15KV	KV	Neutral Cable Feet
Buried	600V	15KV	KV	
Submarine	KV	15KV	KV	
Other	600V	15KV	KV	

FLORIDA POWER & LIGHT COMPANY

PROVIDE 120/240 V 1 Ø TO NEW RESIDENCE
200 N. ESPLANADE DR.

ENGINEER JOSE A. GARCIA	DATE 7-24-94
SCALE: Hor. AS SHOWN Vert. AS SHOWN	DWG. NO. 200 ESPLANADE DR
	UG MAP NO. F-090
RWO/☎ No. 8656 ER No. 7	Loc'n Code 830

FORM 1451E REV. 9/71

TLM DATA

LOC'N.	TX/LAT LOC. NO.
1	8-6658-8641-0-9

LOCATIONS AND ELEVATIONS OF OTHER UTILITIES WERE OBTAINED FROM THE BEST INFORMATION AVAILABLE BUT MAY NOT BE EXACTLY AS SHOWN. DIG WITH CAUTION

48 HOURS PRIOR TO STARTING CONSTRUCTION, CONTACT THE FOLLOWING UTILITIES TO MARK FIELD LOCATIONS OF BURIED FACILITIES.

CITY GAS CO.	691-8710 x 147
SBT&T	264-6820
MIAMI SPGS WATER	885-6104

NAME OF GAS CO. CITY GAS CO.
SERIAL No. 84-10163
DATE OF REQUEST 7-24-84
PHONE 691-8710 ext. 147
GAS IN VICINITY. YES XX NO
NAME OF GAS REP. RONDA LAMB

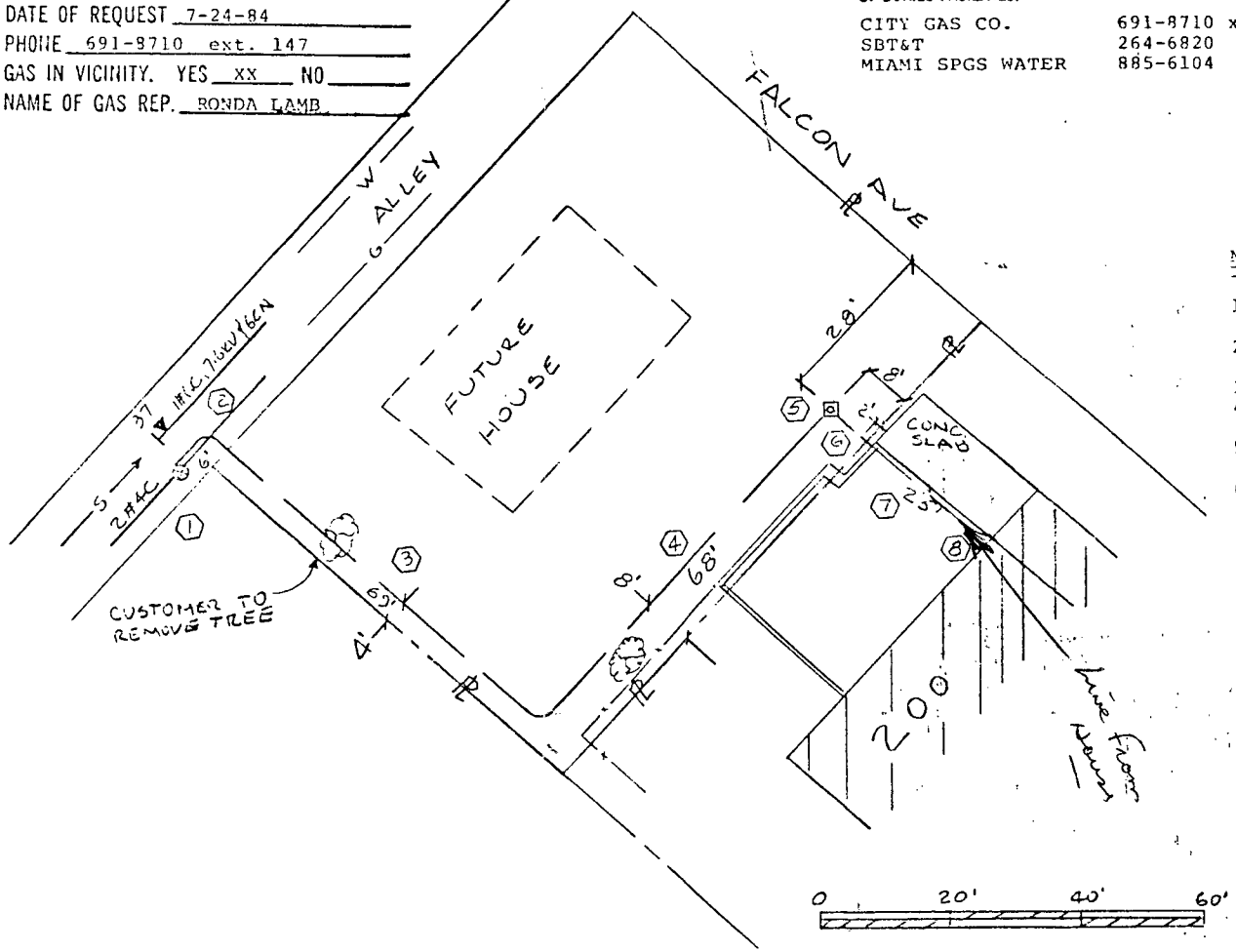

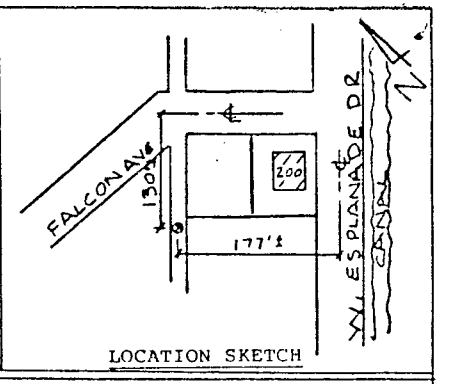

NOTES

1.- Frame pole @ loc'n 1 similar to UH-5 EDS, install 2" RSR. on W side of pole.
2.- At loc'n 2,3&4 pull 4/0 A. TPX, 600 v thru 2" PVC, 36" min. cover.
3.- At loc'n 5 install 20" round H.H.
4.- At loc'n 6 install 2" PVC connecting to customer's from loc'n 7, 24" min. cover.
5.- At loc'n 6,7&8 pull 1/0 A. TPX 600v thru 2" PVC.
6.- At loc'n 7 customer to install PVC.

EASEMENT STAKES AS BUILT REQ'D

SHEET 1/2

NO.	DATE	REVISION	BY	CH.	COR.	APP.

DRAWN BY JAG
CHECKED BY
CORRECT

Easement Req'd. Yes ☒ No ☐	Survey. Stakes Req'd. Yes ☒ No ☐	Telephone Request Yes ☐ No ☒	Trench Feet 143'
Tree Work Required Yes ☐ No ☒	Permission Required Yes ☐ No ☒		Duct Bank Feet 0
Map Posting Req'd. Yes ☐ No ☒	Posted by		
Permit Required: NONE			

Cable Feet	600V	15KV	KV	Neutral Cable Feet
Buried	600V	15KV	KV	
Submarine	KV	15KV	KV	
Other	600V	15KV	KV	

FLORIDA POWER & LIGHT COMPANY

PROVIDE 120/240 V 1 Ø TO NEW RESIDENCE
200 W. ESPLANADE DR.

ENGINEER JOSE A. GARCIA	DATE 7-24-84
SCALE: Hor. AS SHOWN Vert. AS SHOWN	DWG. NO. 200 ESPLANADE DR
RWO/ No. 8656 ER No. 7	UG MAP NO. F-090
	Loc'n Code 830

FORM 1451E REV. 5/71

10/82

CITY OF MIAMI SPRINGS
BUILDING DEPARTMENT

ELECTRICAL PERMIT APPLICATION

Date: 8-20-84 Permit No. (E-189-84)

Property Owner's Name & Address: JOHN CAVALIER (JACKSON)

Job Site Address: 200 ESPLANADE

Name & Address of Contractor: DADE ELECTRIC SERVICE, INC.

Phone # 887-4645 D.C. Municipal License # 13260

Signature of Master Electrician Don Michelson

	Ea.	No.	Fee		Ea.	No.	Fee
Outlets-rough wiring (1-10)	6.00			A/C - Wall Unit /Ton	6.00		
each additional	.50			A/C - Central per ton	6.00		
Range (top) oven	6.00			Exhaust Fan (ea.)	6.00		
Water Heater	6.00			Swimming Pool	20.00		
Refrigerator	6.00			Motor(s)1 HP (ea.)	6.00		
Dryer	6.00			Incr. Service to:100A	6.00		
Clothes Washer	6.00			Sub Feeds (ea.)	6.00		
Disposal	6.00			Sign(s) (ea.)	20.00		
Dishwasher	6.00			Temporary Service	20.00		
Space Heater	6.00			Other: Explain			
Fixtures 1-10 Min.	4.00			UNDERGROUND			
each additional	.50			SERVICE 100 AMPS.			

* Per Schedule of Fees
MINIMUM FEE $

TOTAL FEE: $ 20.00

Additional Information:

SERVICE TO
INSIDE LOT THE
WITHIN EASEMENT

Application is hereby made to obtain a permit to do the work and installations as hereon indicated. I certify that NO WORK OR INSTALLATION has been effected prior to the issuance of said permit, and that all work will be performed to meet the standards of all laws regulating construction in the City of Miami Springs.

Don Michelson
Master Electrician

Application approved by: [signature] Date: 8/21/84

Note: All permits must be picked up in person

CMS - 007

(Orig.) White — OFFICE
(Dupl.) Canary — AUDITOR'S COPY
(Tripl.) Pink — CONTRACTOR'S COPY

J.H. MANUCY, INC.

PROFESSIONAL LAND SURVEYORS

4694 Palm Avenue, Suite 203 • Hialeah, Florida 33012
DADE (305) 821-1281 • (305) 821-1220 BROWARD (305) 563-2066

I HEREBY CERTIFY THAT THIS PLAT OF SURVEY WAS PREPARED UNDER MY DIRECTION, THAT IT MEETS THE MINIMUM TECHNICAL STANDARDS FOR LAND SURVEYING IN THE STATE OF FLORIDA (CHAPTER 21HH-6 FLORIDA ADMINISTRATIVE CODE) FOR THE TYPE OF SURVEY SHOWN HEREON AND IS TRUE AND CORRECT TO THE BEST OF MY KNOWLEDGE AND BELIEF.

J.H. Manucy, Professional Land Surveyor #1128
John F. Pulice, Professional Land Surveyor #2691

State of Florida Date September 1, 1983

BOUNDARY SURVEY

WAIVER OF PLAT. APPROVED.
8/13/84
LEGAL DESCRIPTION
a.k.a. 300 FALCON AVE.
M.S.C.O. SEC. 150, 151, 152
BM Tells
BUILDING OFFICIAL, CITY OF MIAMI SPRINGS

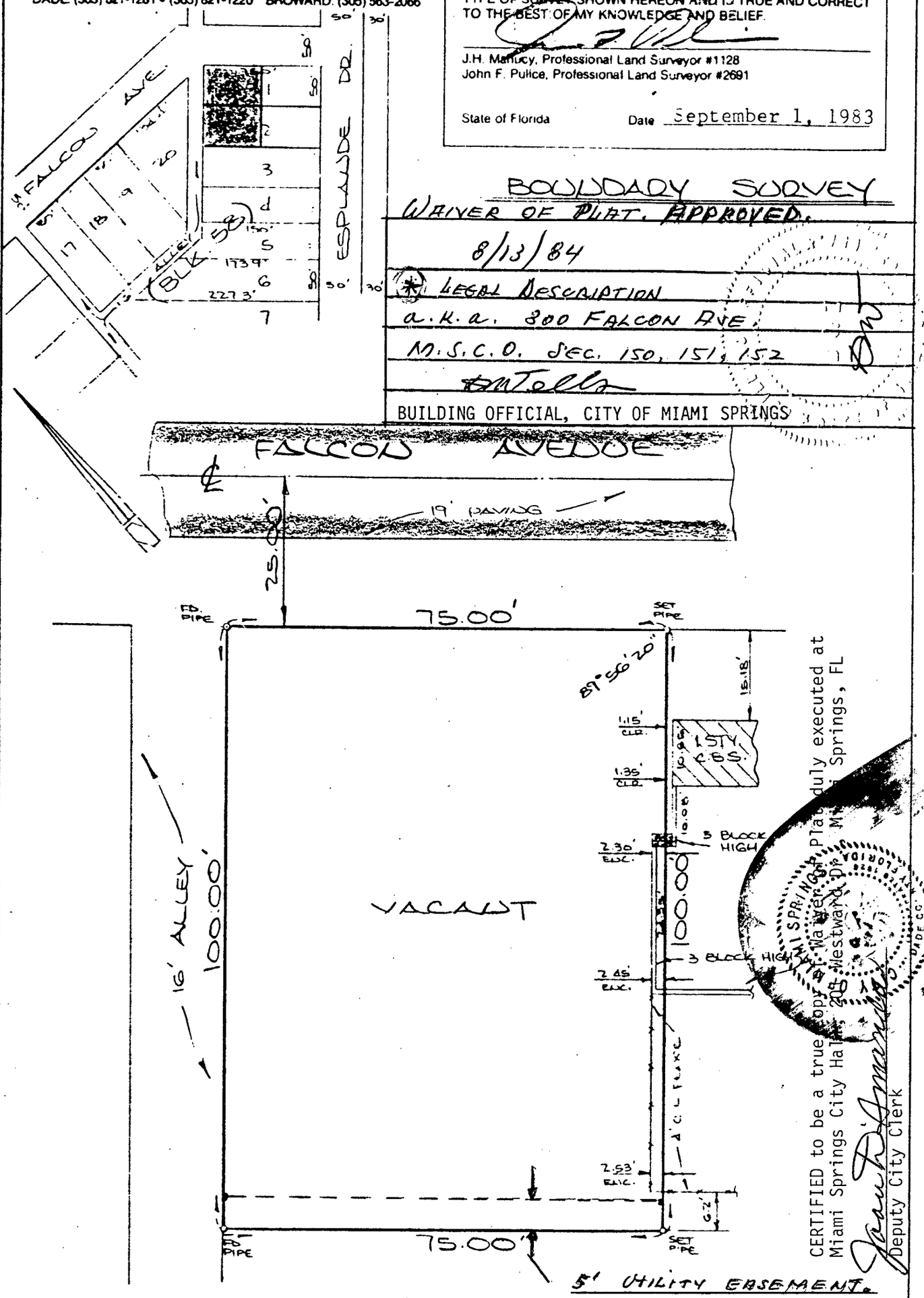

CERTIFIED to be a true copy of Waiver of Plat duly executed at Miami Springs City Hall, 201 Westward Dr., Miami Springs, FL
Deputy City Clerk

The Northwesterly ½ of Lots 1 & 2, Block 58 of CINEMA PARK ADDITION TO COUNTRY CLUB ESTATES as recorded in Plat Book 17 at Page 2 according to the Plat thereof of the Public Records of Dade County, Florida.

FOR: Thomas W. Jackson DATE: August 31, 1983

SCALE: 1" = 20' ORDER No. 27237 F.B. A152-49 REV.

REV.

J.H. MANUCY, INC.

PROFESSIONAL LAND SURVEYORS

4694 Palm Avenue Suite 203 • Hialeah, Florida 33012
DADE: (305) 821-1281 • (305) 821-1220 BROWARD (305) 563-2066

I HEREBY CERTIFY THAT THIS PLAT OF SURVEY WAS PREPARED UNDER MY DIRECTION; THAT IT MEETS THE MINIMUM TECHNICAL STANDARDS FOR LAND SURVEYING IN THE STATE OF FLORIDA (CHAPTER 21HH-6 FLORIDA ADMINISTRATIVE CODE) FOR THE TYPE OF SURVEY SHOWN HEREON AND IS TRUE AND CORRECT TO THE BEST OF MY KNOWLEDGE AND BELIEF.

J.H. Manucy, Professional Land Surveyor #1128
John F. Pulice, Professional Land Surveyor #2691

State of Florida Date September 1, 1983

BOUNDARY SURVEY

WAIVER OF PLAT: APPROVED.
8/13/84
(*) LEGAL DESCRIPTION
a.k.a. 200 ESPLANADE
M.S.C.O. SEC. 150, 151, 152
K.M. Wells
BUILDING OFFICIAL, CITY OF MIAMI SPRINGS

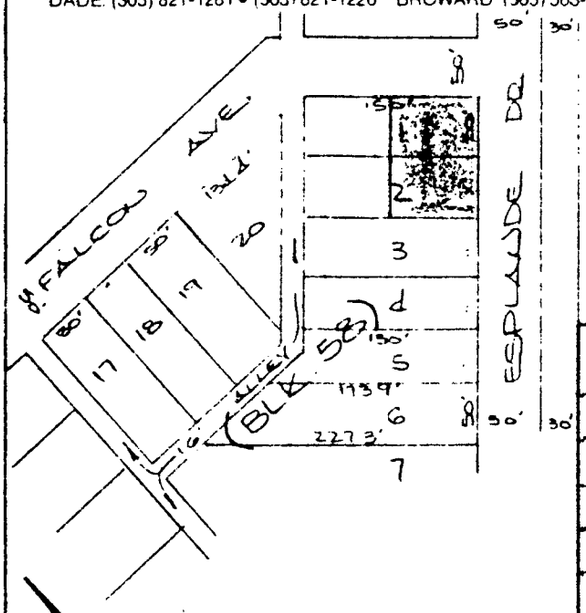

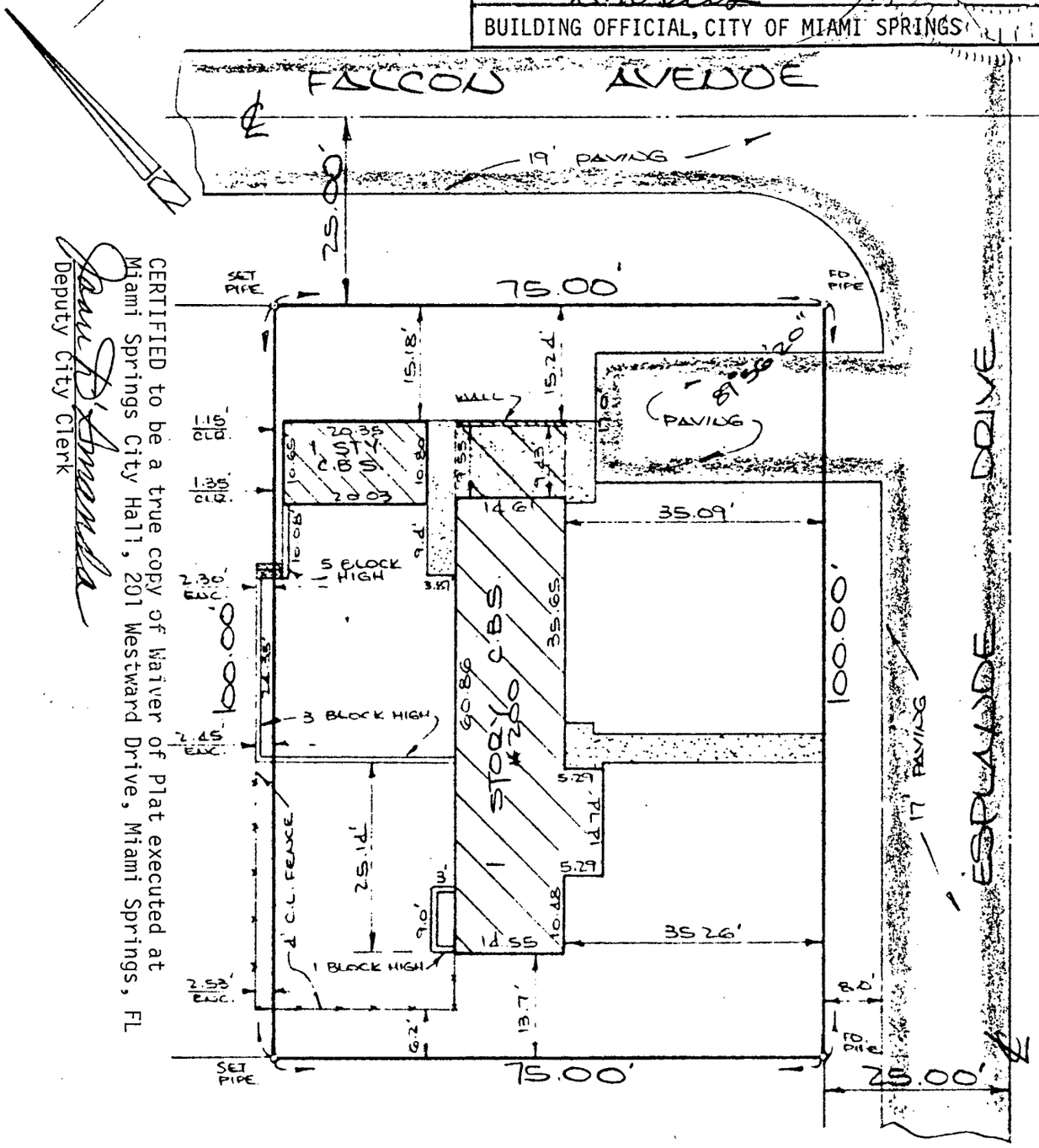

CERTIFIED to be a true copy of Waiver of Plat executed at Miami Springs City Hall, 201 Westward Drive, Miami Springs, FL

Deputy City Clerk

(*) The Southeasterly ½ of Lots 1 & 2, Block 58 of CINEMA PARK ADDITION TO COUNTRY CLUB ESTATES according to the Plat thereof as recorded in Plat Book 17 at Page 2 of the Public Records of Dade County, Florida.

FOR: Thomas W. Jackson DATE: August 31, 1983

SCALE 1" = 20' ORDER No. 27237 F.B. A152-49 REV.

REV.

OFF REC 12236 PG 868

WARRANTY DEED
FROM INDIVIDUAL TO CORPORATION

RAMCO FORM 34

This Warranty Deed *Made the* 3rd. *day of* August *A. D. 19* 84 *by*
Thomas W. Jackson, A single person
hereinafter called the grantor, to Irving H. Zahn

a corporation existing under the laws of the State of Florida *, with its permanent postoffice address at* 78 Canal Street, Miami Springs, Florida 33166
hereinafter called the grantee:

(Wherever used herein the terms "grantor" and "grantee" include all the parties to this instrument and the heirs, legal representatives and assigns of individuals, and the successors and assigns of corporations)

Witnesseth: *That the grantor, for and in consideration of the sum of* $ *and other valuable considerations, receipt whereof is hereby acknowledged, hereby grants, bargains, sells, aliens, remises, releases, conveys and confirms unto the grantee, all that certain land situate in* County, Florida, *viz:*

84 AUG 28 A10:
CITY OF MIAMI SPRI

Lots 1 and 2, Block 58, CINEMA PARK ADDITION TO COUNTRY CLUB ESTATES, according to the plat thereof as recorded in Plat Book 17 at Page 2 of the Public Records of Dade County, Florida.

$ 337.50 Documentary Stamps Collected
Dade County
Richard P. Brinker
Clerk, Circuit & County Courts
By Jlopez 8-14-84 DC

Together *with all the tenements, hereditaments and appurtenances thereto belonging or in anywise appertaining.*

To Have and to Hold, *the same in fee simple forever.*

And *the grantor hereby covenants with said grantee that the grantor is lawfully seized of said land in fee simple; that the grantor has good right and lawful authority to sell and convey said land; that the grantor hereby fully warrants the title to said land and will defend the same against the lawful claims of all persons whomsoever; and that said land is free of all encumbrances, except taxes accruing subsequent to December* 31, 19

In Witness Whereof, *the said grantor has hereunto set* my *hand and seal the day and year first above written.*

Signed, sealed and delivered in our presence:

Dina J. McMillan — Thomas W Jackson L.S.

L.S.

STATE OF FLORIDA,
COUNTY OF Dade

I HEREBY CERTIFY that on this day, before me, an officer duly authorized in the State aforesaid and in the County aforesaid to take acknowledgments, personally appeared Thomas W. Jackson, A single person

to me known to be the person described in and who executed the foregoing instrument and He acknowledged before me that He executed the same.

WITNESS my hand and official seal in the County and State last aforesaid this 3rd day of August, A. D. 19 84

NOTARY PUBLIC STATE OF FLORIDA
MY COMMISSION EXP. JAN 13,1988
BONDED THRU GENERAL INS. UND.

Dina J. McMillan

NOTARY PUBLIC STATE OF FLORIDA AT LARGE

This Instrument prepared by: Irving H. Zahn
Address 78 Canal Street
Miami Springs, Fl. 33166

RECORDED IN OFFICIAL RECORDS BOOK OF DADE COUNTY, FLORIDA.
RECORD VERIFIED
RICHARD P. BRINKER
CLERK CIRCUIT COURT

1984 AUG 14 AM 9:36

84R248220

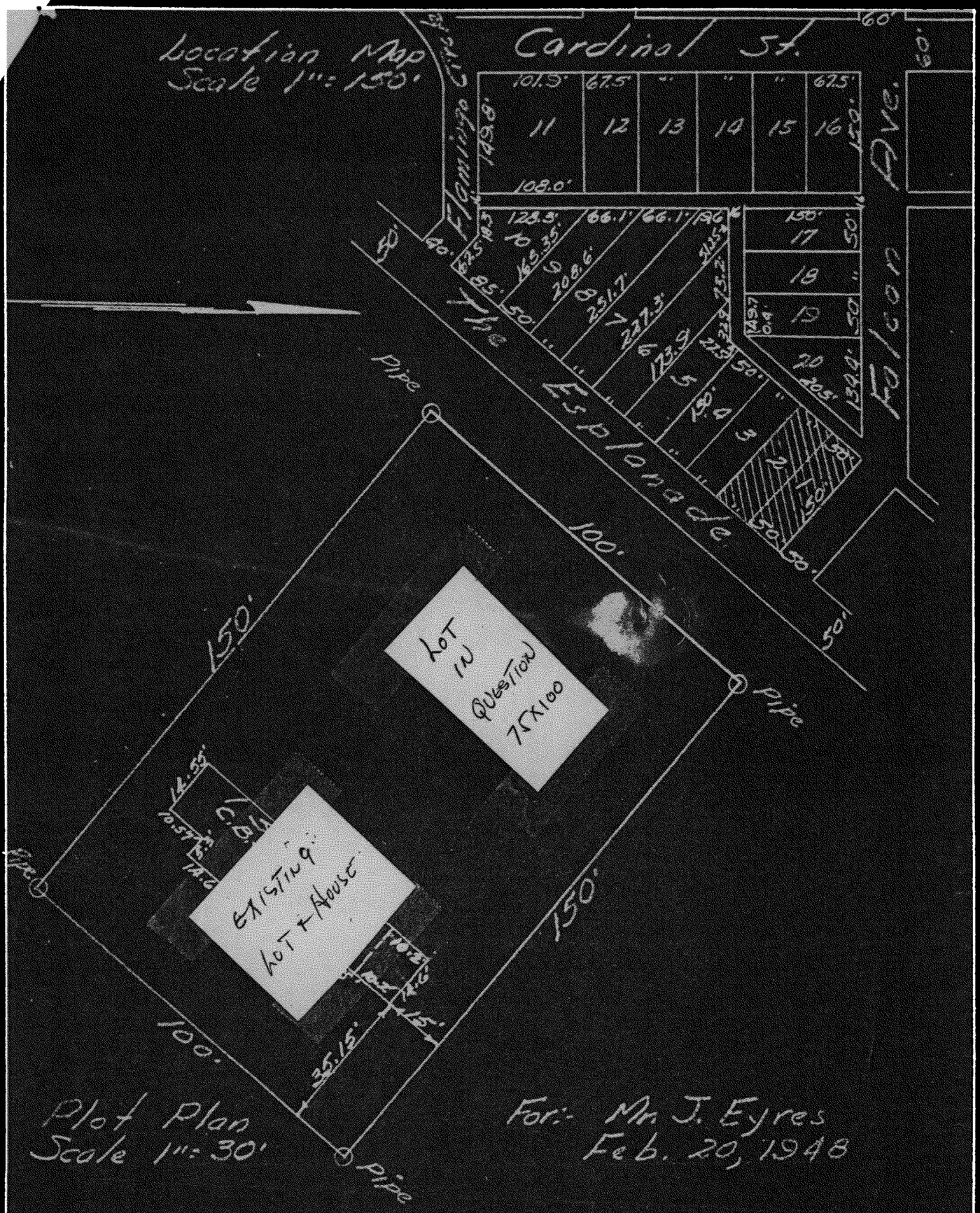

PHYSICAL SURVEY

OF

Lots 1 & 2 Block 38 Cinema Park Addition to Country Club Estates, recorded in Plat Book 17 Page 2, Public Records of Dade County Florida.

THIS IS TO CERTIFY THAT WE SURVEYED THE PROPERTY SHOWN ON THE PLAT AND THAT THE TITLE LINES AND THE WALLS OF THE BUILDING ARE AS SHOWN HEREON AND STAND WITHIN THE TITLE LINES AND THAT THERE ARE NO ENCROACHMENTS UPON THE PROPERTY.

SIGNED W. J. Knox

W. J. KNOX
LICENSED CIVIL ENGINEER No. 713
REG. LAND SURVEYOR No. 104

SCALE SHOWN

REC 12236 PG 868

WARRANTY DEED
FROM INDIVIDUAL TO CORPORATION

RAMCO FORM 34

This Warranty Deed *Made the* 3rd. *day of* August *A. D.* 19 84 *by* Thomas W. Jackson, A single person *hereinafter called the grantor, to* Irving H. Zahn

05-3118-16

a corporation existing under the laws of the State of Florida *, with its permanent postoffice address at* 78 Canal Street, Miami Springs, Florida 33166 *hereinafter called the grantee:*

(Wherever used herein the terms "grantor" and "grantee" include all the parties to this instrument and the heirs, legal representatives and assigns of individuals, and the successors and assigns of corporations)

Witnesseth: *That the grantor, for and in consideration of the sum of $ and other valuable considerations, receipt whereof is hereby acknowledged, hereby grants, bargains, sells, aliens, remises, releases, conveys and confirms unto the grantee, all that certain land situate in County, Florida, viz:*

Lots 1 and 2, Block 58, CINEMA PARK ADDITION TO COUNTRY CLUB ESTATES, according to the plat thereof as recorded in Plat Book 17 at Page 2 of the Public Records of Dade County, Florida.

$ 337.50 Documentary Stamps Collected
Dade County
Richard P. Brinker
Clerk, Circuit & County Courts
By Jlopez 8-14-84 DC

75000

Together *with all the tenements, hereditaments and appurtenances thereto belonging or in anywise appertaining.*

To Have and to Hold, *the same in fee simple forever.*

And *the grantor hereby covenants with said grantee that the grantor is lawfully seized of said land in fee simple; that the grantor has good right and lawful authority to sell and convey said land; that the grantor hereby fully warrants the title to said land and will defend the same against the lawful claims of all persons whomsoever; and that said land is free of all encumbrances, except taxes accruing subsequent to December 31, 19*

In Witness Whereof, *the said grantor has hereunto set my hand and seal the day and year first above written.*

Signed, sealed and delivered in our presence:

Nina J McMillan — Thomas W Jackson L.S.

[signature] — L.S.

STATE OF FLORIDA,
COUNTY OF Dade

I HEREBY CERTIFY that on this day, before me, an officer duly authorized in the State aforesaid and in the County aforesaid to take acknowledgments, personally appeared Thomas W. Jackson, A single person to me known to be the person described in and who executed the foregoing instrument and He acknowledged before me that He executed the same.

WITNESS my hand and official seal in the County and State last aforesaid this 3rd day of August, A. D. 19 84

Nina J McMillan

NOTARY PUBLIC STATE OF FLORIDA AT LARGE

This Instrument prepared by: Irving H. Zahn
Address 78 Canal Street
Miami Springs, Fl. 33166

RECORDED IN OFFICIAL RECORDS BOOK OF DADE COUNTY, FLORIDA.
RECORD VERIFIED
RICHARD P. BRINKER,
CLERK CIRCUIT COURT

1984 AUG 14 AM 9:36

84R248220

5.00

Jackson-Zahn

CITY OF MIAMI SPRINGS

MEMORANDUM

To: To Whom It May Concern Date: 13 August 1984

From: Dave Wells

Re: 200 N. Esplanade Dr.

Waiver of Plat has been prepared, changing Lots 1 & 2, Block 58, Cinema Park Addition to County Club Estates, from 1 & 2 to 1A & 2A respectively.

An endorsement attesting to this change has been entered on to the face of two current surveys. Date and signature and Seal will be affixed after completion of demolition permit attached.

Use of the underground(s') easement across the rear of Lot 2A is shown in dotted lines.

Utility companies and documents supporting this change authorization, are deposited in the Bussey-Jackson-Zahn file in the Building and Zoning Department, City Hall, 201 Westward Dr., Miami Springs, FL.

Dave Wells
Building Official

DW/jd

Procedure: Miami Springs Code of Ordinances, Sections 150, 151 & 152. Property Reference: 200 N. Esplanade and 300 Falcon Avenue.

A. Soto 227-2700
WAIVER OF PLAT.

JACKSON - ZAHN
FILE

City of MIAMI SPRINGS Florida

M E M O R A N D U M

TO: CITY MANAGER & CITY BUILDING DIRECTOR

FROM: CITY ATTORNEY

RE: JACKSON/ZAHN;
SEWER ASSESSMENTS;
SUBDIVISION IMPROVEMENTS;

DATE: JULY 23, 1984

Gentlemen:

We have been asked to review a current situation which involves two (2) existing platted lots, the re-subdivision of these lots into two (2) new lots, and the payment of sewer assessments and subdivision improvements in regard to this matter.

Initially, it is quite clear that the City of Miami Springs Code of Ordinances requires that sewer assessments be charged for "all parcels of property or portions thereof" to help defray the debt service and other costs of the sanitary sewer system. (Ordinance 50.17) All assessments begin to accrue at the time that the system became operational. (Ordinance Section 50.17)

Owners of unimproved properties, however, are permitted to stay the collection of all sewer assessments when these properties cannot comply with existing zoning requirements, are not intended for development, or will not utilize, nor benefit from, the sanitary sewer system to the same extent as other improved parcels. (Code Section 50.18).

The common factor utilized in determining "stay eligibility" seems to be ownership of "unimproved platted lots." (Code Section 50.19) It is quite clear, in the present case, that a stay of assessment

TE:

---

was permitted because the unimproved platted lot was abutting an improved platted lot where a unity of title existed and because the homesite was comprised of both platted lots and only one (1) sewer connection. (Code Section 50.19).

There does not seem to be any question that all platted lots are liable for sewer assessments from the date of operation of the system. It is equally clear that all prior, but stayed assessments, become due and payable when an unimproved parcel begins being specially benefited from its utilization of the sewer system.

In the present case, since the unimproved platted lot will now be used to create a new homesite, it is now being specially benefited from the system, and is now liable for all prior sewer assessments.

Further, the issue of a subdivision improvement (sewer connection lateral) has been raised in this matter due to the fact that the two (2) platted lots are now being split sideways and turned around to create a new buildable homesite which is not adjacent to the sewer system.

It has been our experience, and that of the Public Works Department, that situations such as this require that the owner or developer pay the cost of providing whatever subdivision improvements are required to secure a building permit for the new homesite.

This position is supported by our Code of Ordinances which allows the re-subdivision of property without the necessity of platting so long as certain specific conditions are met. (Code Section 150.020).

The Building and Zoning Department may require all improvements that it deems to be a necessary part of a new division of existing property. (Code Section 150.020).

Therefore, if the Building and Zoning Department determines that the new homesite needs any subdivision improvements, it will be the responsibility of the owner or developer to provide them for the new homesite.

If you have any further questions, please do not hesitate to contact me.

Sincerely,

JAN K. SEIDEN

JKS/bt

LAW OFFICES

WEINTRAUB, WEINTRAUB, SEIDEN, DUDLEY

PRESS & ORSHAN

2250 S. W. 3RD AVENUE, 5TH FLOOR

MIAMI, FLORIDA 33129

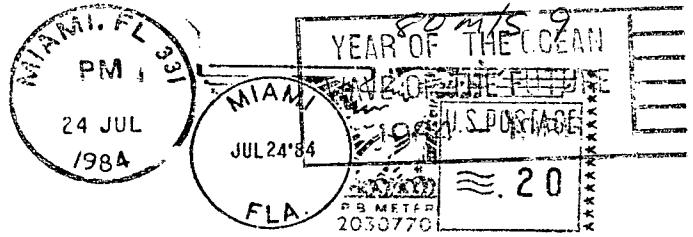

Mr. Dave Wells
City Building Director
City of Miami Springs
201 Westward Drive
Miami Springs, Florida 33166

City of MIAMI SPRINGS Florida

MEMORANDUM

To: City Attorney

Date: 25 June 1984

From: Dave Wells

Re: Refacing Two Lots and Collecting the Sewer Assessment. (Jackson/Zahn)
200 S Esplanade Dr.

1. The City's position has been to collect this money prior to issuing a Waiver of Plat and a building permit.

2. We are currently in a ten (10) year cycle since the sewers were in-atalled. The following chit carries the amount for creating a new lot, less the interest.

3. Please advise validity of this practice. The owner wishes to challange.

Dave Wells
Building Official

DW/jd
Encl.

ASSESSMENT NOTICE

CITY OF MIAMI SPRINGS, DADE COUNTY, FLORIDA

June 25, 1984

STATEMENT OF AMOUNT DUE FOR SPECIAL ASSESSMENT IMPROVEMENT LIENS AGAINST THE PROPERTY DESCRIBED BELOW:

PROPERTY DESCRIPTION	KIND OF LIEN	CURRENT AMOUNT	UNPAID BALANCE	AMOUNT DUE
Cinema Park, Block 58, Lots 1 & 2 200 S. Esplanade Drive (Permission to build on vacant property formerly part of homestead.) 75 x 100	Unimproved Property Sanitary Sewer Res. # Install #	Assessment 8/1/72 - 9/1/84 ($85.50 per annum) $1,033.13	INTEREST To / Amount	$1,033.13 plus 7½% int. per annum starting 7/25/84

MAIL TO

Jackson/Zahn
78 Canal Street
Miami Springs, FL 33166

This NOTICE DOES NOT include, or apply on, any TAXES, either CITY or COUNTY.

BRING THIS NOTICE WITH YOU OR MAIL WITH YOUR REMITTANCE.

MAKE CHECKS PAYABLE TO CITY OF MIAMI SPRINGS

ENCLOSED SELF-ADDRESSED STAMPED ENVELOPE IF RETURN RECEIPT IS DESIRED.

BUILDING AND ZONING DEPARTMENT
201 WESTWARD DRIVE
MIAMI SPRINGS, FL 33166

TELEPHONE
(305) 885-4581

20 June 1984

Mr. Thomas W. Jackson
200 N. Esplanade Drive
Miami Springs, FL 33166

Dear Mr. Jackson:

In compliance with your request, this letter is to advise you of the City's requirements should the owner of the 100' x 150' lot located at 200 Esplanade Drive wish to subdivide the lot into two 75'x100' lots.

1. First, the owner of the subject property should submit a letter to this department requesting the City's approval to subdivide the lot into two 75' x 100' parcels. If the owner intends to apply for a building permit for the subdivided property, the letter should state this intention.

2. Along with the letter, there should be a copy of a current survey showing the location of all improvements on the property. The improvements should be restricted to a 75' x 100' portion of the overall platted lot of record and must not encroach upon the 75' x 100' portion for which the owner intends to apply for a building permit. Furthermore, the existing improvements must comply with all setback requirements. In this case, the house which is presently situated on the lot and facing 200 N. Esplanade Drive must:

a) Be located on a 75' x 100' lot.

b) Have minimum setbacks: front yard setback of 30'; rear yard setback of 25'; 15' setback on the side of the house facing Falcon Avenue, and a 10' setback on the south side of the house.

No building permit can be issued for the remaining 75' x 100' portion of the platted lot until all encroachments into the above described setback areas have been removed.

3. The owner should provide a survey showing the proposed locations of water, sewer, electric, telephone, gas and television cable. The ap-

To: Thomas W. Jackson

Re: 200 N. Esplanade Drive

propriate utility agencies must approve the locations and relocations of all utilities.

4. A "Waiver of Plat" must be prepared for the City Manager's signature.

5. The owner must pay the cost of extending sewer lateral to the property line.

6. The owner must also pay the cost of a sewer assessment which is required by Chapter 50, Section 50.20 of the City Code. This section is attached hereto for your reference.

Yours truly,

Dave Wells
Building Official

DW/jd
Attch.

cc: City Manager

§ 50.20 PROCEDURE FOR OBTAINING STAY OF COLLECTION OF ASSESSMENT.

The following procedure shall govern all requests for stay of collection of assessment.

(A) The owner of an unimproved platted lot qualifying for stay of collection of assessment may petition the city manager by filing a petition under oath setting forth the following:

(1) The name and address of the owner and legal description of the unimproved lot.

(2) All liens and encumbrances and the names and addresses of all persons holding any liens or encumbrances against said property or lot.

(3) A copy of a plat showing the dimensions of the lot.

(4) A recordable covenant in a form to be approved by the city attorney, executed by all persons or corporations claiming an interest in the lot and acknowledging the validity and the continuing nature of the assessment lien imposed upon the lots.

(B) The covenant shall contain the following agreements:

(1) Where the unimproved platted lot abuts an improved platted lot and there is unity of title, the owner agrees that the assessments and accumulated interest for each year levied against the unimproved platted lot shall become due and payable in the event the ownership of the lot is conveyed to another party or in the event an application for building permit is sought.

(2) Where an unimproved platted lot fails to comply with the minimum square footage or front footage requirements of the zoning code and the owner of the lot seeks to obtain a variance permitting the development or other use of the land, or in the event the owner seeks a building permit permitting the development of said land, the owner agrees that the assessments and accumulated interest for each year shall become due and payable.

(C) The city manager upon approval of the relief sought by the petition shall notify the city council at any regular or special meeting and shall thereafter cause the covenant to be recorded in the manner as required for deeds under law. In the event the city manager denies the relief sought by the petition, the petitioner shall have the right to appeal to the city council within the time and in the same manner as permitted for appeals from a denial of relief by the zoning and planning board. (Ord. 591-76, passed 12-13-76)

LOCATIONS AND ELEVATIONS OF OTHER UTILITIES WERE OBTAINED FROM THE BEST INFORMATION AVAILABLE BUT MAY NOT BE EXACTLY AS SHOWN. DIG WITH CAUTION

TLM DATA

LOC'N.	TX/LAT LOC. NO.
1	8-6659-8641-0-9

NAME OF GAS CO. CITY GAS CO.
SERIAL No. 84-10163
DATE OF REQUEST 7-24-84
PHONE 691-8710 ext. 147
GAS IN VICINITY. YES XX NO
NAME OF GAS REP. RONDA LAMB

48 HOURS PRIOR TO STARTING CONSTRUCTION, CONTACT THE FOLLOWING UTILITIES TO MARK FIELD LOCATIONS OF BURIED FACILITIES.

CITY GAS CO.	691-8710 x 147
SBT&T	264-6820
MIAMI SPGS WATER	885-6104

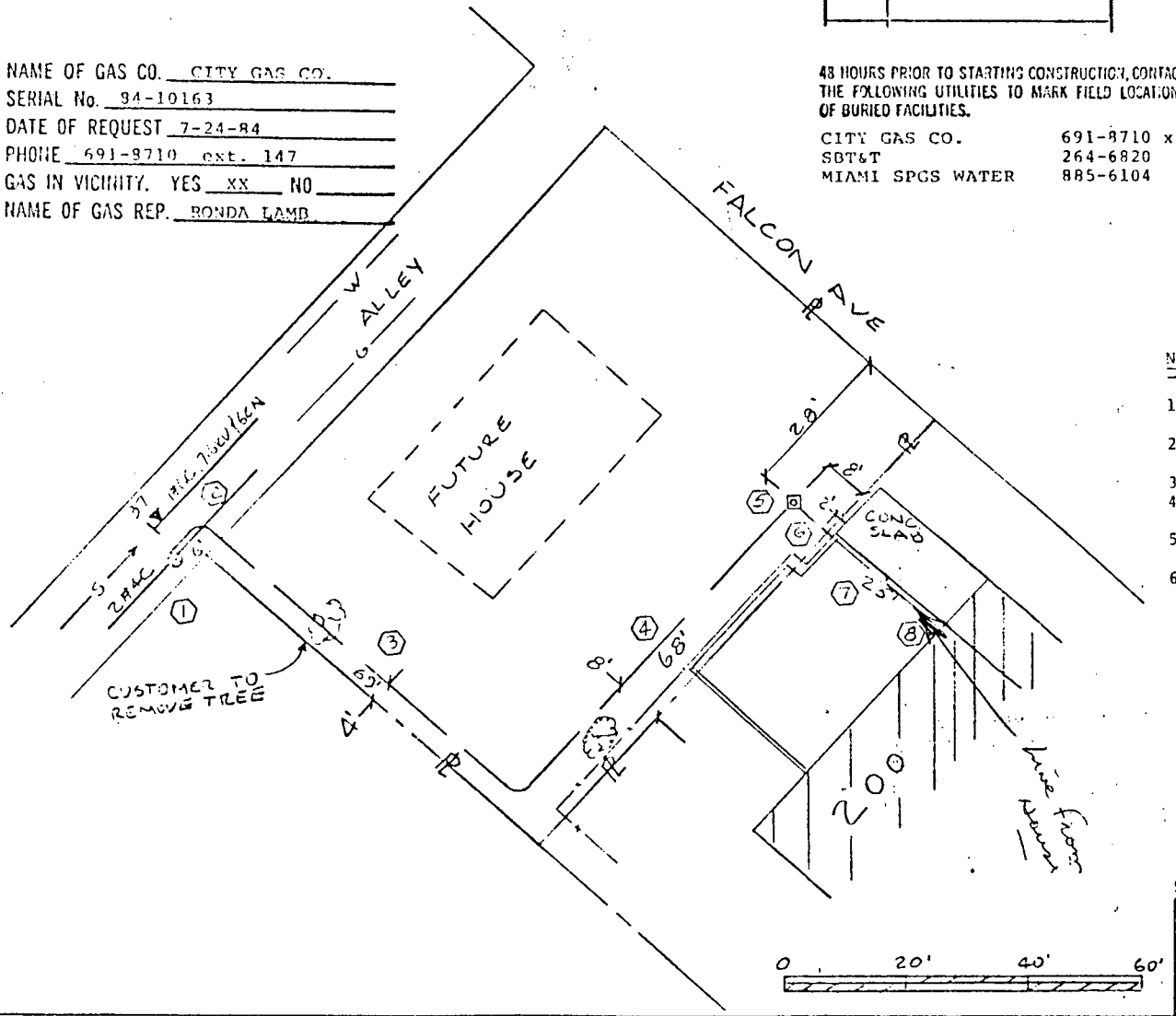

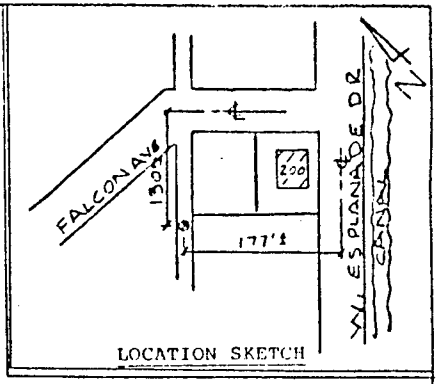

NOTES

1.- Frame pole @ loc'n 1 similar to UH-5 EDS, install 2" RSR. on W side of pole.
2.- At loc'n 2,3&4 pull 4/0 A. TPX, 600 v thru 2" PVC, 36" min. cover.
3.- At loc'n 5 install 20" round H.H.
4.- At loc'n 6 install 2" PVC connecting to customer's from loc'n 7, 24" min. cover.
5.- At loc'n 6,7&8 pull 1/0 A. TPX 600v thru 2" PVC.
6.- At loc'n 7 customer to install PVC.

EASEMENT
STAKES
AS BUILT REQ'D

SHEET 1/2

FLORIDA POWER & LIGHT COMPANY

PROVIDE 120/240 V 1 Ø TO NEW RESIDENCE

200 N. ESPLANADE DR.

ENGINEER JOSE A. GARCIA	DATE 7-24-94
SCALE: Hor. AS SHOWN Vert. AS SHOWN	DWG. NO. 200 ESPLANADE DR
	UC MAP NO. F-090
RWO/ No. 8656 ER No. 7	Loc'n Code 830

Easement Req'd. Yes ☑ No ☐	Survey Stakes Req'd. Yes ☑ No ☐	Telephone Request Yes ☐ No ☑	Trench Feet + 143'		Duct Bank Feet 0
Tree Work Required Yes ☐ No ☑	Permission Required Yes ☐ No ☑		Cable Feet	600V	15KV	KV	Neutral Cable Feet
Map Posting Req'd. Yes ☐ No ☑	Posted by		Buried				
Permit Required: NONE			Submarine	KV	15KV	KV	
			Other	600V	15KV	KV	

NO.	DATE	REVISION	BY	CH. COR. APP.

DRAWN BY JAG
CHECKED BY
CORRECT

FORM 1451E REV. 9/71

HOLD

DONT TYPE

UNTIL WE GET

AN APPROVED COPY FR

TOP SIDE.

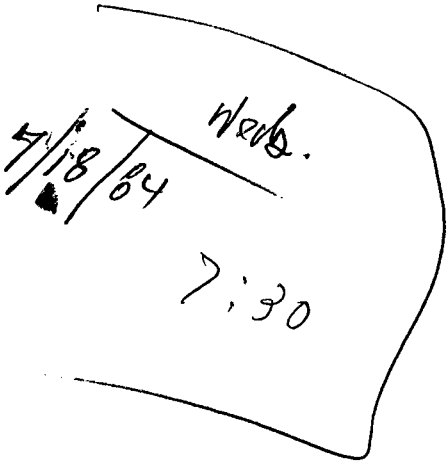
Herb.
4/18/64
7:30

6/18/84

T. JACKSON
I. ZAIN

GENTLEMEN:

CLARIFICATION OF A PROCEDURE FOR QUALIFYING A BUILDING SITE IS AS FOLLOWS:

LETTER FROM OWNER.
TWO NEW SURVEYS.
OWNERS PLAN FOR ACHIEVING PROPER SETBACKS
OWNERS PLAN FOR PROVIDING U.G. UTILITIES TO BOTH SITES.

200 ESPLANADE (WITH MODIFIED IMPROVEMENT) TO BECOME LEGAL DESCRIPTION: S.E. 1/2 OF LOTS 1 and 2, BL. 58, CINEMA PARK.

300 FALCON TO BECOME LEGAL DESCRIPTION: N.E. 1/2 OF LOTS 1 and 2, BL. 58, CINEMA PARK.

PLEASE BE ADVISED THAT "PRIOR" TO ISSUING A "WAIVER OF PLAT" TO ALLOW RESUBDIVISION: 200 ESPLANADE MUST SHOW FR. 30', RR. 25', and 10% SIDE SETBACKS. 300 FALCON MUST SHOW A 5' REAR EASEMENT DEEDED IN PERPETUITY, AS A MEANS TO SERVING U.G. UTILITIES TO THE CORNER LOT.

As a check list, please provide a survey and proposed location showing service to each lot for <u>water</u>, <u>sewer</u>, <u>electric</u>, <u>telephone</u>, <u>Gas</u>, and <u>T.V.</u> cable. (Since no overhead structures are permitted in the 5' easement-setback, obtain U.G. cost estimates from each franchised utility.)

In the event, you wish to retain more of the present improvement than called for in the code; specifically request same; and the denial by this department will be your grounds for an appeal to the Board of Adjustment - Planning and Zoning and City Council.

Yours truly

<u>Note</u>: A complete record of information in our files is forwarded for your convenience.

References:
M.S.C.O. 150.18 150.19 150.20
150.43 Ordinances 465 (7-29-70)
and 504 (1-24-72).

City of MIAMI SPRINGS Florida

18 June 1984

Mr. Thomas W. Jackson
200 North Esplanade Drive
Miami Springs, FL 33166

Mr. Irving Zahn
Zahn Realty
78 Canal Street
Miami Springs, FL 33166

Gentlemen:

Clarification of a procedure for qualifying a building site, is as follows:

Letter from owner.
Two new surveys.
Owner's plan for achieving proper setbacks.
Owner's plan for providing underground utilitites to both sites.

200 N. Esplanade Dr.: (With modified improvement) to become legal description: S.E. 1/2 of Lots 1 & 2, Block 58, Cinema Park.

300 Falcon Avenue: To become legal description: N.E. 1/2 of Lots 1 & 2, Block 58, Cinema Park.

Please be advised that prior to issuing a "Waiver of Plat" to allow subdivision, 200 N. Esplanade must show front setback of 30', rear setback of 25', and 10% side setbacks. 300 Falcon Avenue must show a 5' rear easement deeded in perpetuity, as a means to serving underground utilities to the corner lot.

As a check list, please provide a survey and proposed location showing service to each lot for water, sewer, electric, telephone, gas, and T.V. cable. Since no overhead structures are permitted in the 5' easement setback, obtain underground cost estimates from each franchised utility.

Yours truly,

Dave Wells
Building Official

NOTE: A complete record of information in our files is forwarded for your convenience.

References: Miami Springs Code of Ordinances, Sections 150.18, 150.19, 150.20, 150.43; Ordinances No. 465 (7/29/70) and No. 504 (1/24/72).

DW/jd
Encls.

PHONE CALL

FOR Dave DATE 11-19 TIME 11:30 A.M. P.M.

M TONY SOTO, ATTORNEY

OF re: replatting 200 No. Espl.

PHONE 227-2700
AREA CODE NUMBER EXTENSION

MESSAGE Needs to speak w/ you re: registering the waiver of plat with the County

- ✓ TELEPHONED
- RETURNED YOUR CALL
- ✓ PLEASE CALL
- WILL CALL AGAIN
- CAME TO SEE YOU
- WANTS TO SEE YOU

SIGNED

TOPS FORM 4002

re: letter 8-13-84

Mr. Soto notified County ~~of~~ for registering the waiver of plat for 200 No. Esplanade.

TONY TOLLETTO of D/C Public Works advised Soto to get from Mia Spgs:

PROFESSIONAL SURVEYOR'S

① NAME: J.H [illegible]

② QUALIFICATIONS: [illegible]

(SURVEYOR; ~~BUILDING~~ Page 342 of 1565;)

Jackson/Zahn

J.H. MANUCY, INC.

PROFESSIONAL LAND SURVEYORS

4694 Palm Avenue, Suite 203 • Hialeah, Florida 33012
DADE (305) 821-1281 • (305) 821-1220 BROWARD: (305) 563-2066

I HEREBY CERTIFY THAT THIS PLAT OF SURVEY WAS PREPARED UNDER MY DIRECTION, THAT IT MEETS THE MINIMUM TECHNICAL STANDARDS FOR LAND SURVEYING IN THE STATE OF FLORIDA (CHAPTER 21HH-6 FLORIDA ADMINISTRATIVE CODE) FOR THE TYPE OF SURVEY SHOWN HEREON AND IS TRUE AND CORRECT TO THE BEST OF MY KNOWLEDGE AND BELIEF.

J.H. Manucy, Professional Land Surveyor #1128
John F. Pulice, Professional Land Surveyor #2691

State of Florida Date September 1, 1983

ERRATA

BOUNDARY SURVEY

WAIVER OF PLAT.

8/13/84

* LEGAL DESCRIPTION

a.k.a. 300 FALCON AVE.

M.S.C.O. SEC. 150, 151 & 152

BUILDING OFFICIAL, CITY OF MIAMI SPRINGS

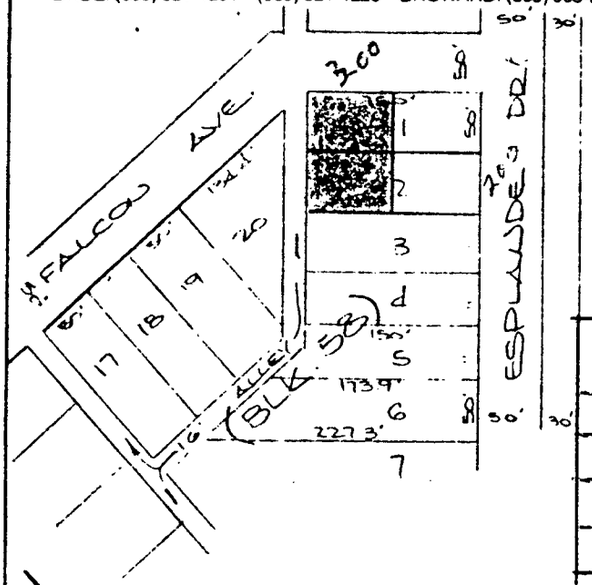

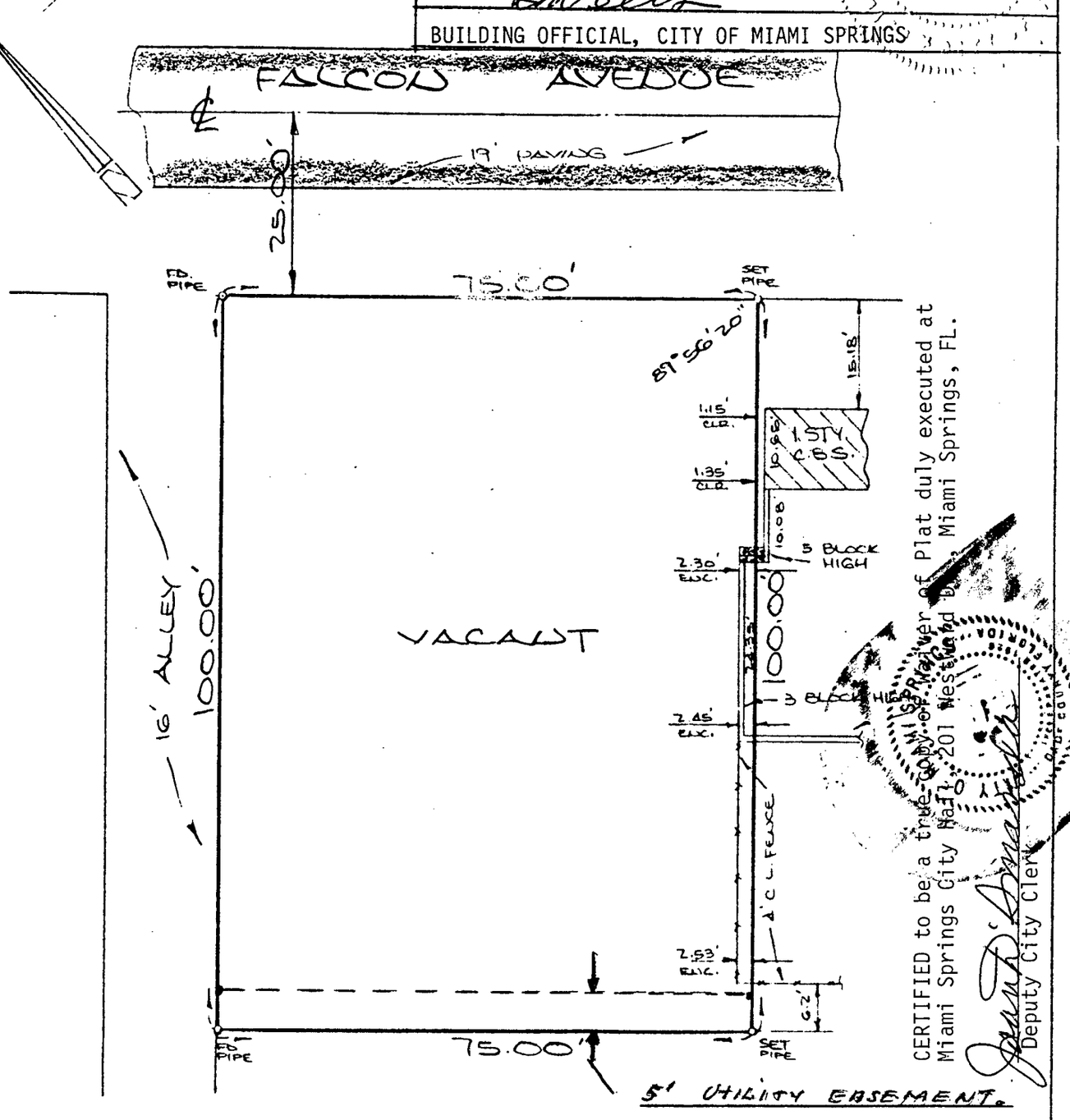

CERTIFIED to be a true copy of Plat duly executed at Miami Springs City Hall, 201 Westward
Deputy City Clerk

The Northwesterly ½ of Lots 1 & 2, Block 58 of CINEMA PARK ADDITION TO COUNTRY CLUB ESTATES as recorded in Plat Book 17 at Page 2 according to the Plat thereof of the Public Records of Dade County, Florida.

FOR: Thomas W. Jackson DATE: August 31, 1983

SCALE: 1" = 20' ORDER No. 27237 F.B. A152-49 REV.

REV.

J.H. MANUCY, INC.

PROFESSIONAL LAND SURVEYORS

4694 Palm Avenue, Suite 203 • Hialeah, Florida 33012
DADE: (305) 821-1281 • (305) 821-1220 BROWARD (305) 563-2066

I HEREBY CERTIFY THAT THIS PLAT OF SURVEY WAS PREPARED UNDER MY DIRECTION; THAT IT MEETS THE MINIMUM TECHNICAL STANDARDS FOR LAND SURVEYING IN THE STATE OF FLORIDA (CHAPTER 21HH-6 FLORIDA ADMINISTRATIVE CODE) FOR THE TYPE OF SURVEY SHOWN HEREON AND IS TRUE AND CORRECT TO THE BEST OF MY KNOWLEDGE AND BELIEF.

J.H. Manucy, Professional Land Surveyor #1128
John F. Pulice, Professional Land Surveyor #2691

State of Florida Date September 1, 1983

ENDORSEMENT.
BOUNDARY SURVEY
WAIVER OF PLAT:
8/13/84
* LEGAL DESCRIPTION
a.k.a. 200 ESPLANADE
M.S.C.O. SEC. 150, 151, 152
K.M. Wells
BUILDING OFFICIAL, CITY OF MIAMI SPRINGS

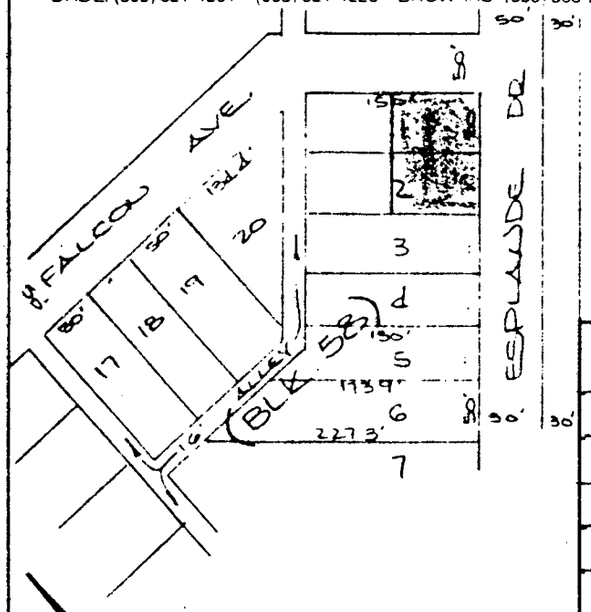

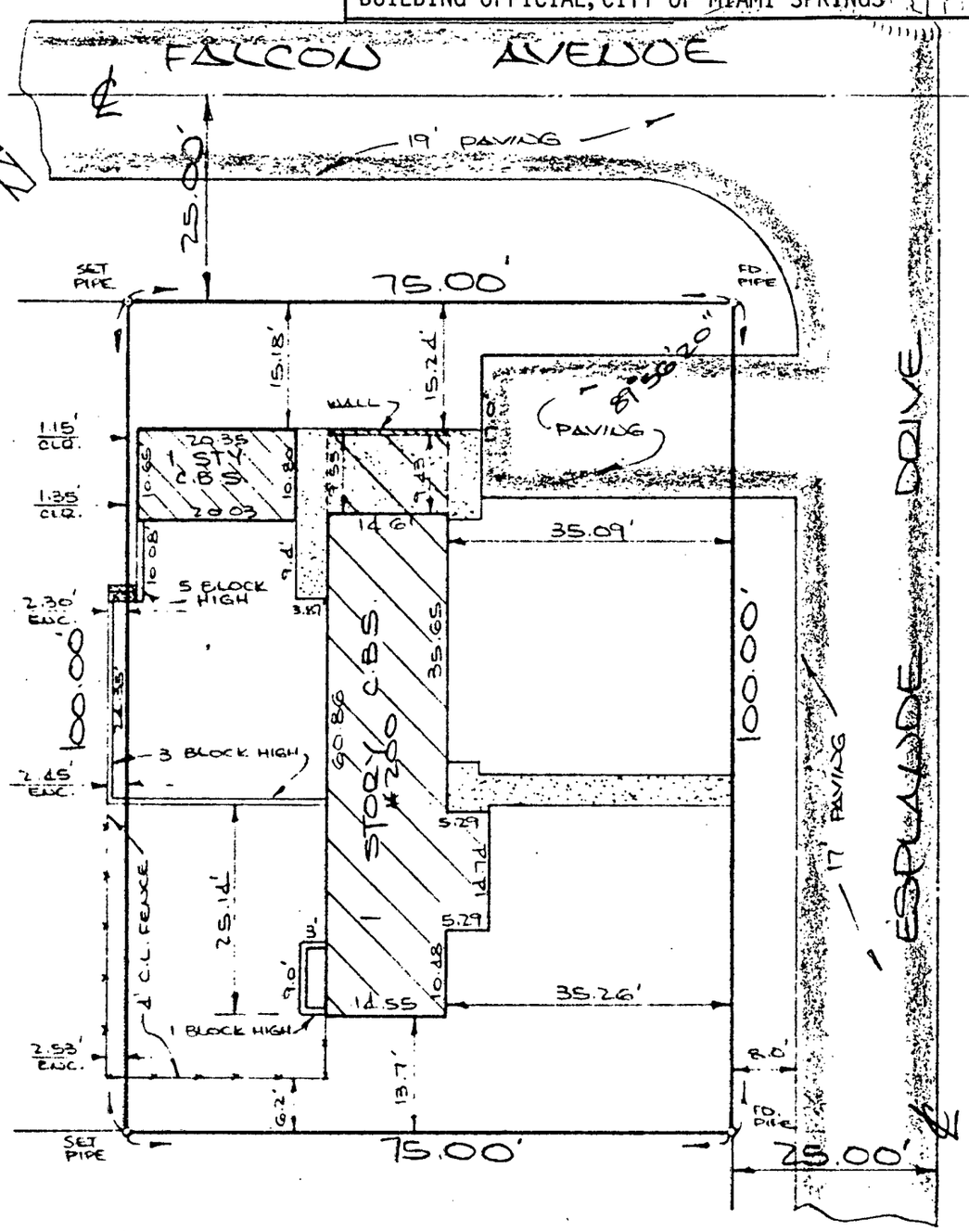

Certified to be a true copy of Waiver of Plat duly executed at Miami City Hall, 201 Westward Dr., Miami Springs, FL.
Deputy City Clerk

* The Southeasterly ½ of Lots 1 & 2, Block 58 of CINEMA PARK ADDITION TO COUNTRY CLUB ESTATES according to the Plat thereof as recorded in Plat Book 17 at Page 2 of the Public Records of Dade County, Florida.

FOR: Thomas W. Jackson DATE: August 31, 1983

SCALE: 1" = 20' ORDER No. 27237 F.B. A152-49 REV.

REV.

OFF REC 12236 PG 868

WARRANTY DEED
FROM INDIVIDUAL TO CORPORATION

RAMCO FORM 34

This Warranty Deed *Made the* 3rd. *day of* August *A. D. 19* 84 *by*
Thomas W. Jackson, A single person
hereinafter called the grantor, to Irving H. Zahn

a corporation existing under the laws of the State of Florida *, with its permanent postoffice address at* 78 Canal Street, Miami Springs, Florida 33166
hereinafter called the grantee:

(Wherever used herein the terms "grantor" and "grantee" include all the parties to this instrument and the heirs, legal representatives and assigns of individuals, and the successors and assigns of corporations)

Witnesseth: *That the grantor, for and in consideration of the sum of* $ *and other valuable considerations, receipt whereof is hereby acknowledged, hereby grants, bargains, sells, aliens, remises, releases, conveys and confirms unto the grantee, all that certain land situate in* County, Florida, *viz:*

84 AUG 28 A10:
CITY OF MIAMI SPRI

Lots 1 and 2, Block 58, CINEMA PARK ADDITION TO COUNTRY CLUB ESTATES, according to the plat thereof as recorded in Plat Book 17 at Page 2 of the Public Records of Dade County, Florida.

$ 337.50 Documentary Stamps Collected
Dade County
Richard P. Brinker
Clerk, Circuit & County Courts
By Jlopez 8-14-84 DC

Together *with all the tenements, hereditaments and appurtenances thereto belonging or in anywise appertaining.*

To Have and to Hold, *the same in fee simple forever.*

And *the grantor hereby covenants with said grantee that the grantor is lawfully seized of said land in fee simple; that the grantor has good right and lawful authority to sell and convey said land; that the grantor hereby fully warrants the title to said land and will defend the same against the lawful claims of all persons whomsoever; and that said land is free of all encumbrances, except taxes accruing subsequent to December 31,* 19

In Witness Whereof, *the said grantor has hereunto set* my *hand and seal the day and year first above written.*

Signed, sealed and delivered in our presence:

Thomas W Jackson L.S.

L.S.

STATE OF FLORIDA,
COUNTY OF Dade

I HEREBY CERTIFY that on this day, before me, an officer duly authorized in the State aforesaid and in the County aforesaid to take acknowledgments, personally appeared Thomas W. Jackson, A single person

to me known to be the person described in and who executed the foregoing instrument and He acknowledged before me that He executed the same.

WITNESS my hand and official seal in the County and State ast aforesaid this 3rd day of August, A. D. 19 84

NOTARY PUBLIC STATE OF FLORIDA
MY COMMISSION EXP. JAN 15,1988
BONDED THRU GENERAL INS. UND.

This Instrument prepared by: Irving H. Zahn
Address 78 Canal Street
Miami Springs, Fl. 33166

RECORDED IN OFFICIAL RECORDS BOOK OF DADE COUNTY, FLORIDA.
RECORD VERIFIED
RICHARD P. BRINKER
CLERK CIRCUIT COURT

NOTARY PUBLIC STATE OF FLORIDA AT LARGE

1984 AUG 14 AM 9:38

84R248220

City of
MIAMI SPRINGS
Florida

BUILDING AND ZONING DEPARTMENT
201 WESTWARD DRIVE
MIAMI SPRINGS, FL 33166

TELEPHONE
(305) 885-4581

13 September 1983

Mr. Irving Zahn
Irv Zahn, Inc.
78 Canal Street
Miami Springs, FL 33166

Mr. Thomas W. Jackson
200 N. Esplanade Drive
Miami Springs, FL 33166

Re: 200 Esplanade Dr./300 Falcon Ave.

Gentlemen:

The division of land in order to build new homesites is in keeping with municipal growth and rising values. Congratulations.

Two surveys of at least 75' x 100' can be accepted and approved if no permanent construction violates a clear separation of the lots, and/or creates a nonconforming improvement situation.

Since the structures seem only to be of an accessory value, please remove them to a line that will yield 10% on side and 25' in the rear, as a description for setbacks.

Field corrected surveys will be acceptable, if initialed by the engineer. "Saving" part of the utility room would be a matter for reference to the Board of Adjustment.

If you require further clarification of this program, please do not hesitate to call.

Yours truly,

Dave Wells
Building Official
City of Miami Springs

DW/jd

J.H. MANUCY, INC.

PROFESSIONAL LAND SURVEYORS

[illegible] Avenue, Suite [illegible] • Hialeah, Florida 33012
[illegible] 821-1128 • [illegible] BROWARD [illegible]

I HEREBY CERTIFY THAT THIS PLAT OF SURVEY WAS PREPARED UNDER MY DIRECTION THAT IT MEETS THE MINIMUM TECHNICAL STANDARDS FOR LAND SURVEYING IN THE STATE OF FLORIDA (CHAPTER 21HH-6, FLORIDA ADMINISTRATIVE CODE) FOR THE TYPE OF SURVEY SHOWN HEREON AND IS TRUE AND CORRECT TO THE BEST OF MY KNOWLEDGE AND BELIEF

J.H. Manucy, Professional Land Surveyor #1128
John F. Pulice, Professional Land Surveyor #2691

State of Florida Date September 1, 1983

BOUNDARY SURVEY

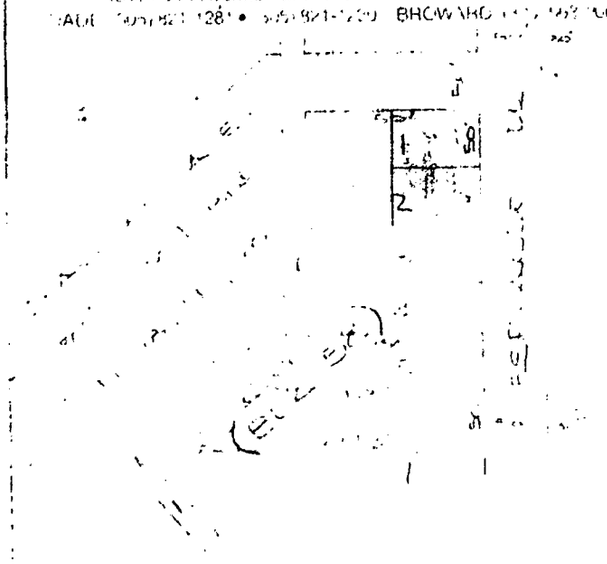

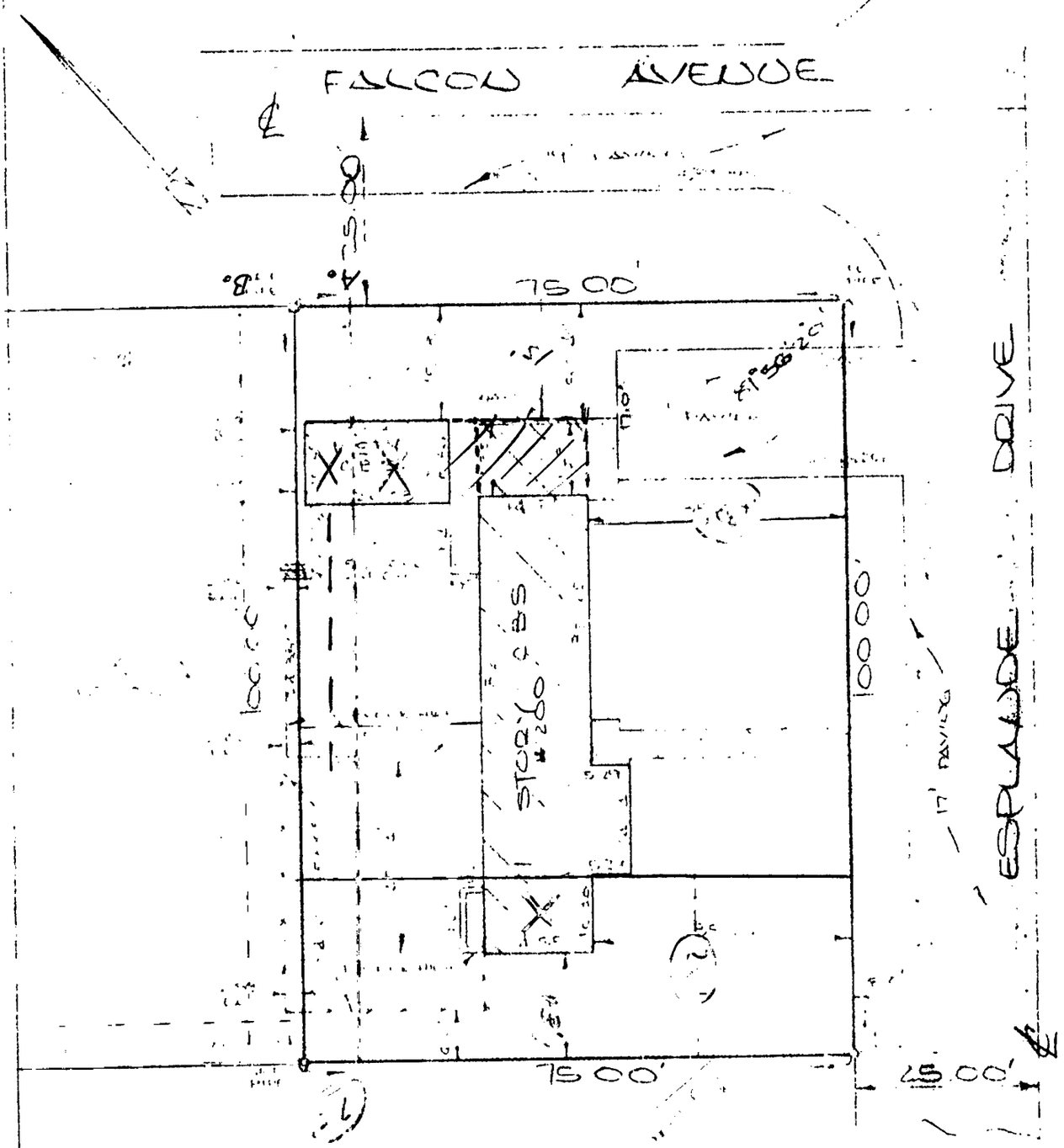

The Southeasterly ½ of Lots 1 & 2, Block 15 of CINEMA PARK ADDITION TO COUNTRY CLUB ESTATES.

as recorded in Plat Book 17 at Page 2 according to the Plat thereof of the Public Records of Dade County, Florida

FOR Thomas W. Jackson

DATE August 31, 1983

SCALE 1" = 20' ORDER NO 27237 FB A152-49 REV

REV

J.H. MANUCY, INC.

PROFESSIONAL LAND SURVEYORS

4694 Palm Avenue, Suite 203 • Hialeah, Florida 33012
DADE (305) 821-1281 • (305) 821-1220 BROWARD: (305) 563-2066

I HEREBY CERTIFY THAT THIS PLAT OF SURVEY WAS PREPARED UNDER MY DIRECTION; THAT IT MEETS THE MINIMUM TECHNICAL STANDARDS FOR LAND SURVEYING IN THE STATE OF FLORIDA (CHAPTER 21HH-6 FLORIDA ADMINISTRATIVE CODE) FOR THE TYPE OF SURVEY SHOWN HEREON AND IS TRUE AND CORRECT TO THE BEST OF MY KNOWLEDGE AND BELIEF

J.H. Manucy, Professional Land Surveyor #1128
John F. Pulice Professional Land Surveyor #2691

State of Florida Date September 1, 1983

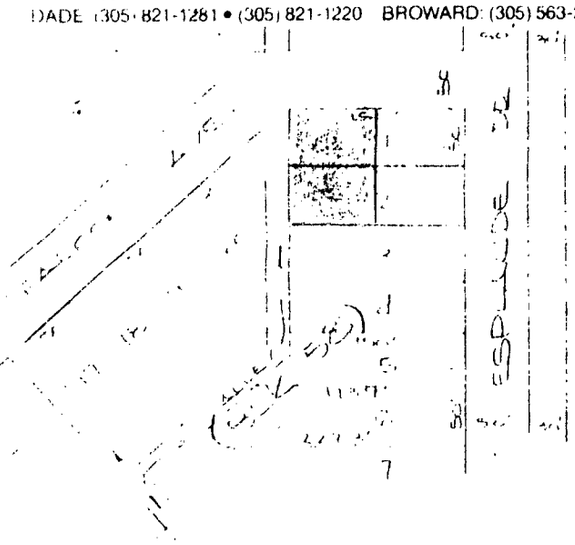

BOUNDARY SURVEY

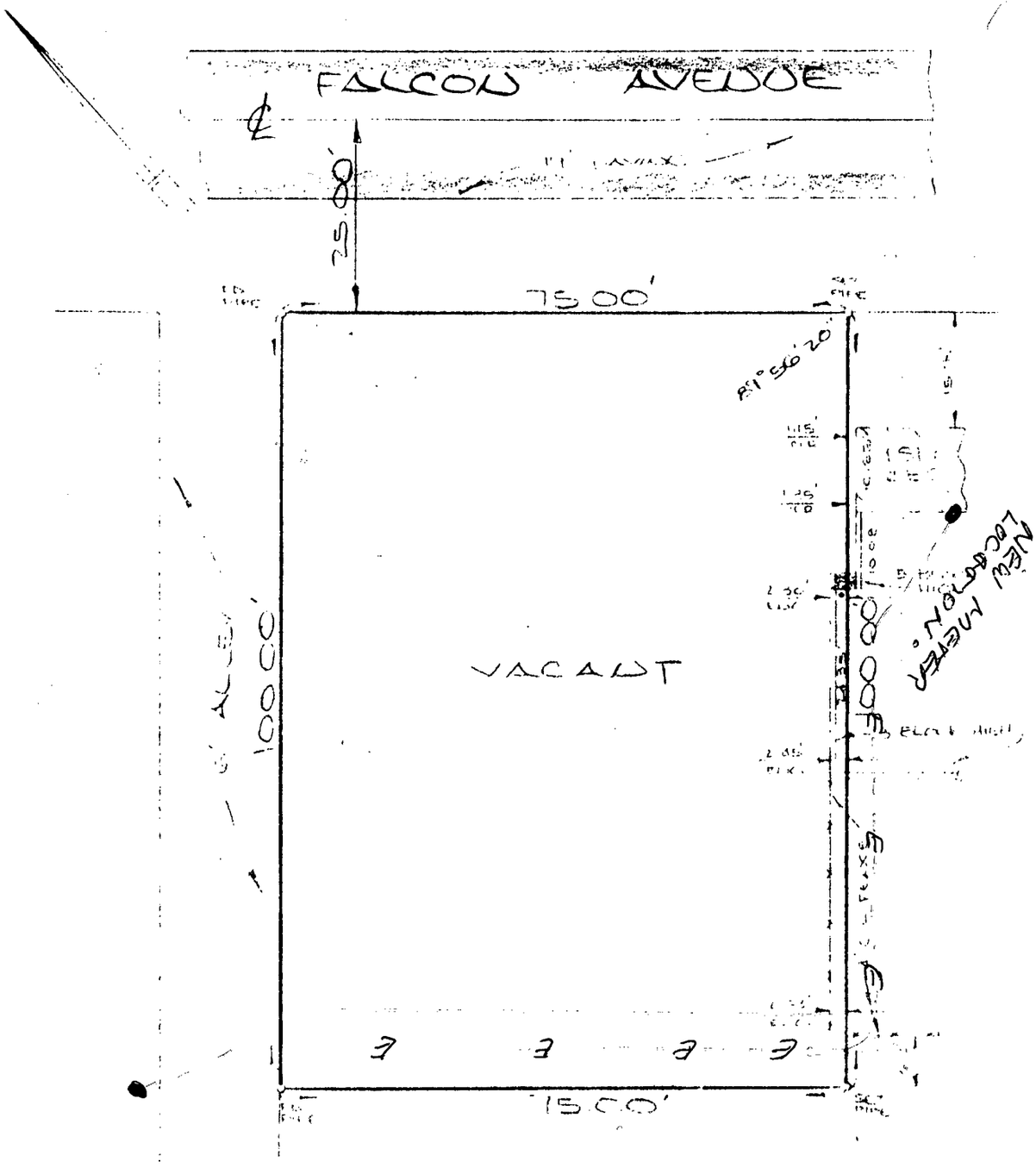

The Northwesterly ½ of Lots 1 & 2, Block 5 of CINEMA PARK ADDITION TO COUNTRY CLUB ESTATES
as recorded in Plat Book 17 at Page 2 according to the Plat thereof of the Public Records of Dade County Florida

FOR Thomas W. Jackson DATE August 31, 1983

SCALE: 1" = 20' ORDER No 27237 FB A152-19 REV.

REV.

A.

BLOG LINE- OLD HOUSE

B.

BLOG. LINE NEW HOUSE.

J.H. MANUCY, INC.

PROFESSIONAL LAND SURVEYORS

[illegible] • [illegible] • [illegible] BROWARD [illegible]

I HEREBY CERTIFY THAT THIS PLAT OF SURVEY WAS PREPARED UNDER MY DIRECTION; THAT IT MEETS THE MINIMUM TECHNICAL STANDARDS FOR LAND SURVEYING IN THE STATE OF FLORIDA (CHAPTER 21HH-6 FLORIDA ADMINISTRATIVE CODE) FOR THE TYPE OF SURVEY SHOWN HEREON AND IS TRUE AND CORRECT TO THE BEST OF MY KNOWLEDGE AND BELIEF

J.H. Manucy, Professional Land Surveyor #1128
John F. Pierce, Professional Land Surveyor #2691

State of Florida Date September 1, 1983

BOUNDARY SURVEY

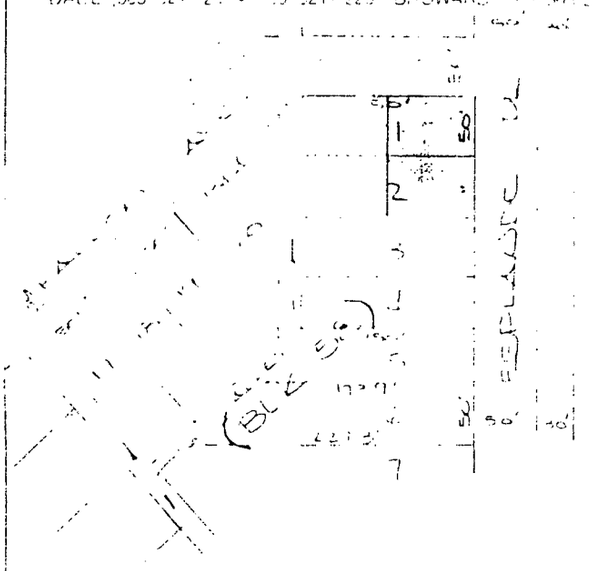

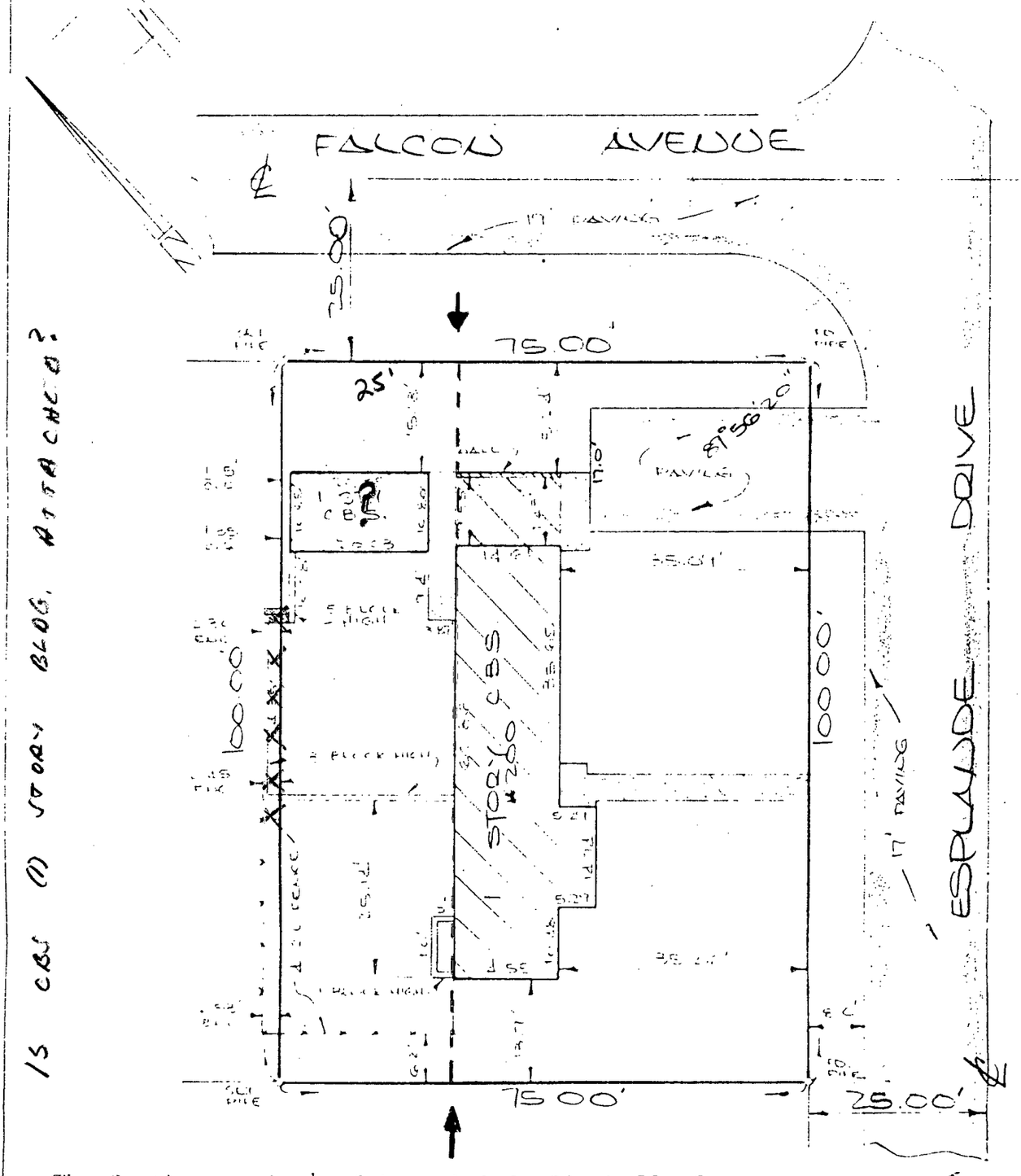

The Southeasterly ½ of Lots 1 & 2, Block 58 of CINEMA PARK ADDITION TO COUNTRY CLUB ESTATES according to the Plat thereof as recorded in Plat Book 17 at Page 2 of the Public Records of Dade County, Florida.

FOR Thomas W. Jackson DATE August 31, 1983

SCALE 1" = 20' ORDER No. 27237 F.B. A152-49 REV.

REV.

September 9, 1983

Mr. Dave Wells
Building Inspector
City of Miami Springs
Miami Springs, Fl. 33166

Re: Request for reverse frontage
(300 Falcon Avenue - NWLY ½ of Lots 1 & 2, Block 58
Cinema Park Add to CCE PB 17/2.

Dear Mr. Wells:

As owner of the above described property I hereby request reverse frontage on Falcon Avenue for a building site on new lot of which surveys are enclosed.

Very truly yours,

Thomas W. Jackson

Thomas W. Jackson

TWJ/iz

8/8/83

INFORMATION TO MARY WILSON

Re: 200 Esplanade, Miami Springs, Fl. 33166

Legal: Cinema Park Block 58 Lot 1, Lot 2 PB 17-2
Lot size 150 x 100

House on lot facing Esplanade - 75 x 100 (PROPOSED).
1 & 2
leaving vacant other 1/2 lot 1 & 2 facing Falcon Ave. 75 x 100.

Previous owner M. W. Eyers was hooked up to the sewer by STEELCO 8/8/72 No. 319.

This was in Phase I for hook up June 29/72. (Sep 29/72)

The Address will be 300 Falcon Ave.

(This information for unimproved property lien)

LBP

EST. OF COST TO BASE FOR UNIMP PROP TAX REQUESTED. FOR OWNR'S

Unimproved Property Sanitary Assessment

7,500 sq. ft. = $85.50 per year

9/29/72 - 8/29/83 = $933.37 (10 years & 11 months)

Irv Zahn, Inc. Realtor

REALTOR

78 CANAL STREET • MIAMI SPRINGS, FLORIDA 33166 • PHONE: (305) 888-8404

- **Buy • Sell • Trade**
  - Residential
  - Commercial
  - Acreage
  - Investments
  - Appraisal Services

August 4, 1983

Mr. Dave Wells
Building Inspector
City of Miami Springs
Miami Springs, Fl. 33166

Re: ½ Lots 1 & 2 Block 58, Cinema Park Addition to CCE
PB 17 Page 2. AKA 200 Esplanade Drive, Miami Springs, Fl.

Dear Mr. Wells:

Regarding our conversation on the above lot please be adv- that I represent the owners and they wish to split Lots 1 & 2 into 2 75 x 100 foot lots.

Please advise in writing that permission and a permit will be granted to built a single family home.

Please note that the existing house has a 7 to 8 foot encroachment and the owner does not wish to demolish at this time.

Respectfully submitted,

Irving H. Zahn
Agent for owners

IHZ;nm

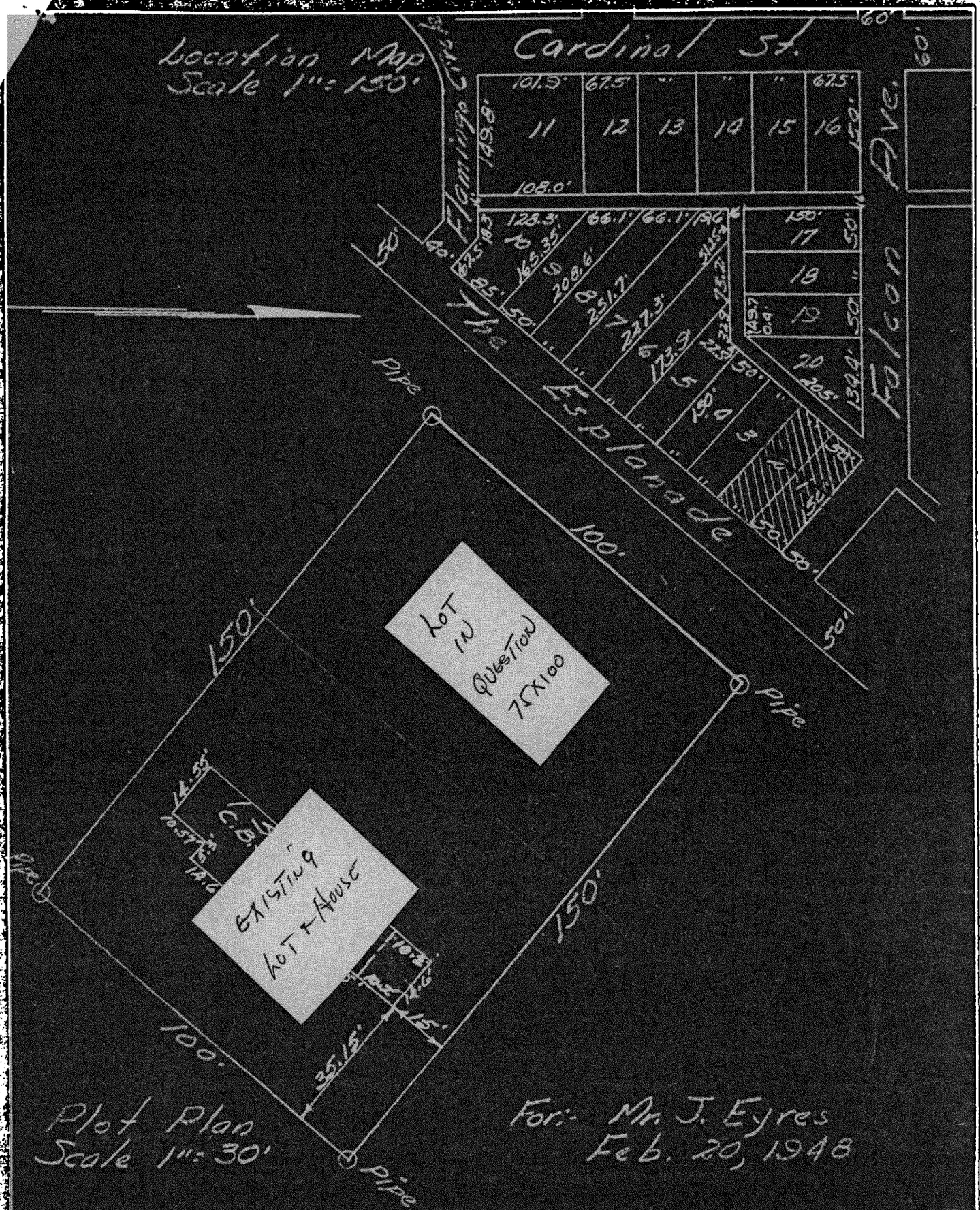

PHYSICAL SURVEY

OF

lots 1 & 2 Block 58 Cinema Park Addition to Country Club Estates, recorded in Plat Book 17 Page 2, Public Records of Dade County, Florida.

THIS IS TO CERTIFY THAT WE SURVEYED THE PROPERTY SHOWN ON THE PLAT AND THAT THE TITLE LINES AND THE WALLS OF THE BUILDING ARE AS SHOWN HEREON AND STAND WITHIN THE TITLE LINES AND THAT THERE ARE NO ENCROACHMENTS UPON THE PROPERTY.

SIGNED W. J. KNOX

W. J. KNOX
LICENSED CIVIL ENGINEER No. 713
REG. LAND SURVEYOR No. 104

SCALE SHOWN

City of MIAMI SPRINGS Florida

BUILDING AND ZONING DEPARTMENT
201 WESTWARD DRIVE
MIAMI SPRINGS, FL 33166

TELEPHONE
(305) 885-4581

8 August 1983

Mr. Irving Zahn
Irv Zahn, Inc.
78 Canal Street
Miami Springs, FL 33166

Mr. Thomas W. Jackson
200 N. Esplanade Drive
Miami Springs, FL 33166

Re: 200 Esplanade Drive,
City of Miami Springs, FL
(Future Lot: 75' x 100';
300 Falcon Avenue)

Gentlemen:

The effort to re-subdivide a 100' x 150' parcel at the above address requires the following steps:

1. Four (4) copies of a current survey for Lot One and Lot Two, showing utilities.

2. Request from the owner to grant reverse frontage on Falcon Avenue for the new lot.

3. Proof of payment of all taxes and liens.

4. Payment of unimproved property tax to the present date (sewers).

5. Letter of Request from owner, requesting a new lot for the purpose of constructing one new single family dwelling, as per Code.

After the above information is received, the data will be compiled in a file as the basis for a "Waiver of Plat", setting out the street address, setbacks, utilities, and usage.

Yours truly,

Dave Wells

Dave Wells
Building Official
DW/jd

Irv Zahn, Inc. Realtor

REALTOR

78 CANAL STREET • MIAMI SPRINGS, FLORIDA 33166 • PHONE: (305) 888-8404

- **Buy • Sell • Trade**
  - Residential
  - Commercial
  - Acreage
  - Investments
  - Appraisal Services

August 4, 1983

Mr. Dave Wells
Building Inspector
City of Miami Springs
Miami Springs, Fl. 33166

Re: ½ Lots 1 & 2 Block 58, Cinema Park Addition to CCE
PB 17 Page 2. AKA 200 Esplanade Drive, Miami Springs, Fl.

Dear Mr. Wells:

Regarding our conversation on the above lot please be adv-
that I represent the owners and they wish to split Lots
1 & 2 into 2 75 x 100 foot lots.

Please advise in writing that permission and a permit will
be granted to built a single family home.

Please note that the existing house has a 7 to 8 foot en-
croachment and the owner does not wish to demolish at this time.

Respectfully submitted,

Irving H. Zahn
Agent for owners

IHZ;nm



PHYSICAL SURVEY

OF

lots 1 & 2 Block 58, Cinema Park Addition to Country Club Estates, recorded in Plat Book 17 Page 2, Public Records of Dade County, Florida.

THIS IS TO CERTIFY THAT WE SURVEYED THE PROPERTY SHOWN ON THE PLAT AND THAT THE TITLE LINES AND THE WALLS OF THE BUILDING ARE AS SHOWN HEREON AND STAND WITHIN THE TITLE LINES AND THAT THERE ARE NO ENCROACHMENTS UPON THE PROPERTY.

SIGNED W. J. Knox

W. J. KNOX
LICENSED CIVIL ENGINEER No. 713
REG. LAND SURVEYOR No. 104

SCALE SHOWN

504

WAIVER OF PLAT AGREEMENT

The parties to this agreement, NORTH-SOUTH DEVELOPMENT CORPORATION, a Florida corporation, and the City of Miami Springs, do hereby agree that the City of Miami Springs will waive its plat requirements on the following-described property:

> North 30 feet of Lot 22, and the South 40 feet of Lot 23, Block 123, SECTION 2, COUNTRY CLUB ESTATES, according to the Plat thereof, recorded in Plat Book 10, at Page 79, of the Public Records of Dade County, Florida;

in order that NORTH-SOUTH DEVELOPMENT CORPORATION shall be allowed to complete the construction of one (1) single-family residence on said property and to obtain a certificate of occupancy permit therefor.

DATED this 22nd day of July, 1976.

Signed, sealed and delivered in the presence of:

Linda Sue McKeetyn

Eve M. Ratcliff

Louise B. Prince

Judith L. Sands

NORTH-SOUTH DEVELOPMENT CORPORATION, a Florida corporation

By: L. W. Perkins
President

Attest: Nancy J. Perkins
Secretary

CITY OF MIAMI SPRINGS

By: Joe Libertini

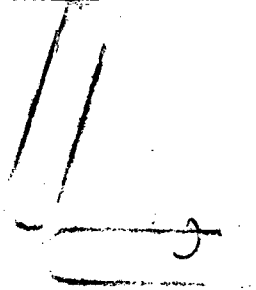

OR

MAIL TO JAN

6/25/84

MEMO
TO CITY ATTY

RE REFACING TWO LOTS and COLLECTING THE SEWER ASSESSMENT. (JACKSON-ZAHN).

(1) CITY'S ~~[illegible]~~ POSITION HAS BEEN TO COLLECT THIS MONEY PRIOR TO ISSUING A WAIVER OF PLAT and A BUILDING PERMIT.

(2) WE ARE CURRENTLY IN A 10 YR. CYCLE SINCE SEWERS WERE INSTALLED: THE FOLLOWING CHIT CARRIES THE AMOUNT FOR ~~[illegible]~~ CREATING A NEW LOT LESS INTEREST.

(3) PLEASE ADVISE VALIDITY OF THIS PRACTICE: OWNER WISHES TO CHALLENGE.

[illegible]

32.10

To JMG (box)
6/27/84
1:05 pm - JD
(2nd copy)

U. G.

JACKSON - ZAHN FILE

5' EASEMENT

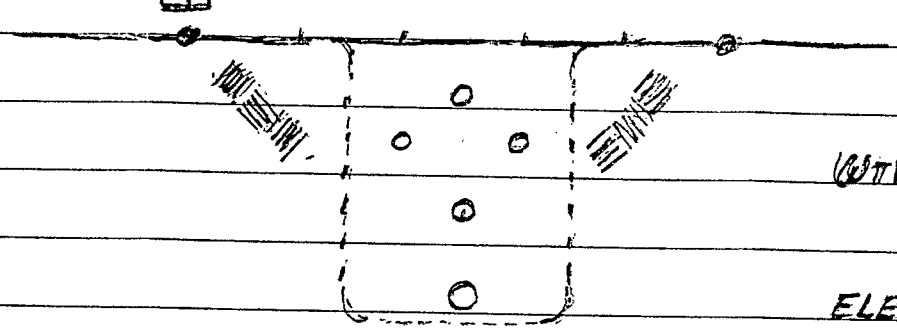

2' TRENCH 3.5' DEEP

RESIDENTIAL; SERVING AN INSIDE LOT. REAR OF LOT ABUTTING ALLEY 5' MINIMUM WIDTH. RECORDED ON DEED RUNNING WITH LAND IN PERPETUITY.

1. OWNER NO. 1. _____
2. OWNER NO. 2. _____
3. ELECTRIC UTILITY (FRANCHISED)
4. TELEPHONE " "
5. WATER " "
6. GAS " "
7. T.V. CABLE " "

BUILDING AND ZONING PROHIBITION OF ALL ABOVE GROUND CONSTRUCTION: BOTH ENDS OF EASEMENT, IF FENCED MUST BE GATED. (CONDUIT REQUIRED)

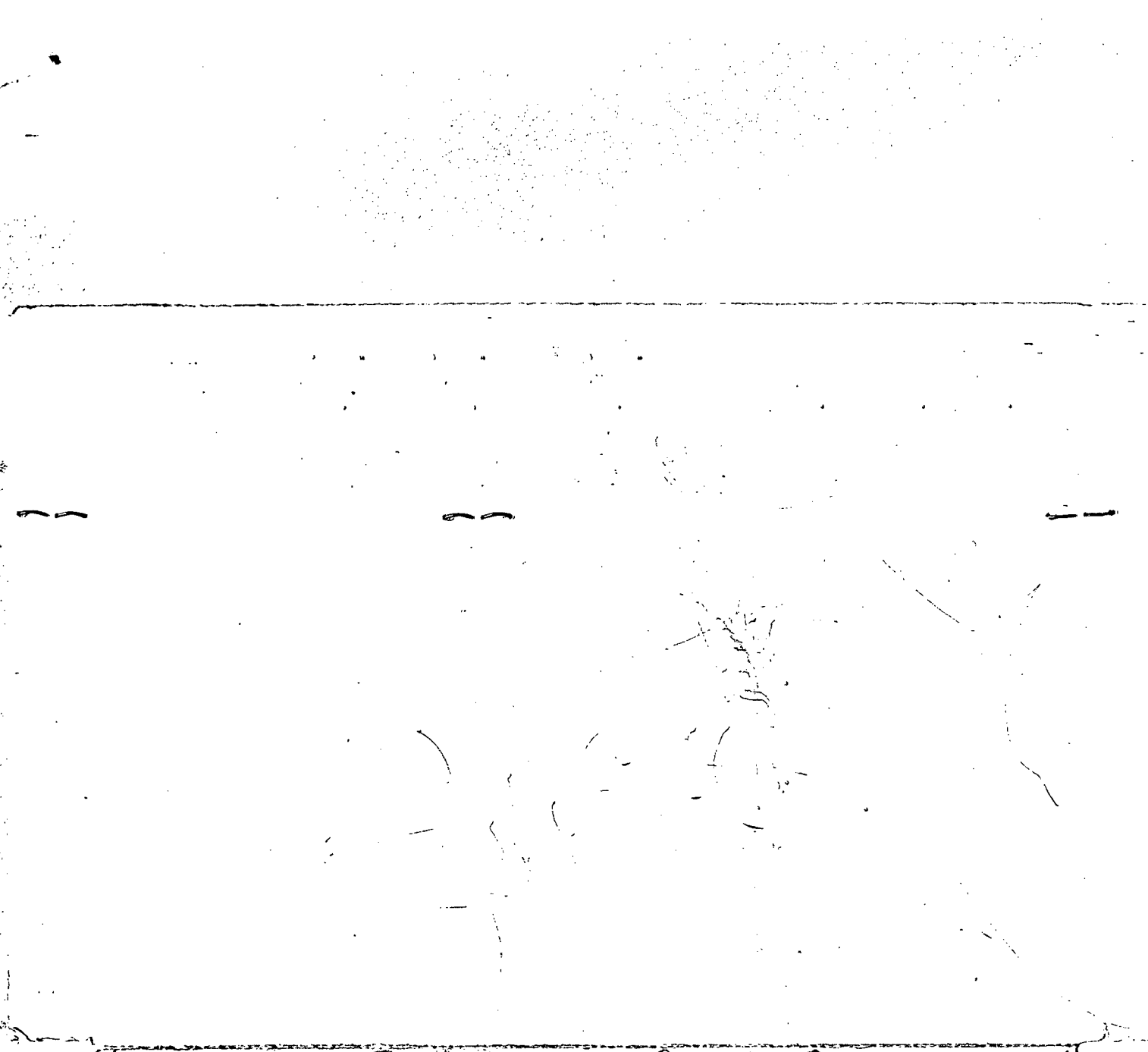

1- 2- 3- 4- 5- 8- 9- 0- 1.

OWNER	200 Esplanade Drive OWNER	LEGAL
James Clark Eyres, ~~851 Hunting Lodge Dr.,~~ ~~Local 4/19/47~~ ~~200 Esplanade~~		RIC REF 150.43
~~Margaret Windsor Eyres Sgle~~ ~~200 Esplanade Dr Local~~ ~~10 27 61 st 20~~		
~~Joseph Patrick Bussey & w Dorothy~~ ~~533 Mokena Dr~~ QCD 2/76 ~~(lives here)~~		
~~THOMAS WAYNE JACKSON & w~~ PATRICE BUSSEY JACKSON 200 N. Esplanade Dr. QCD 11-14-77 24,000		

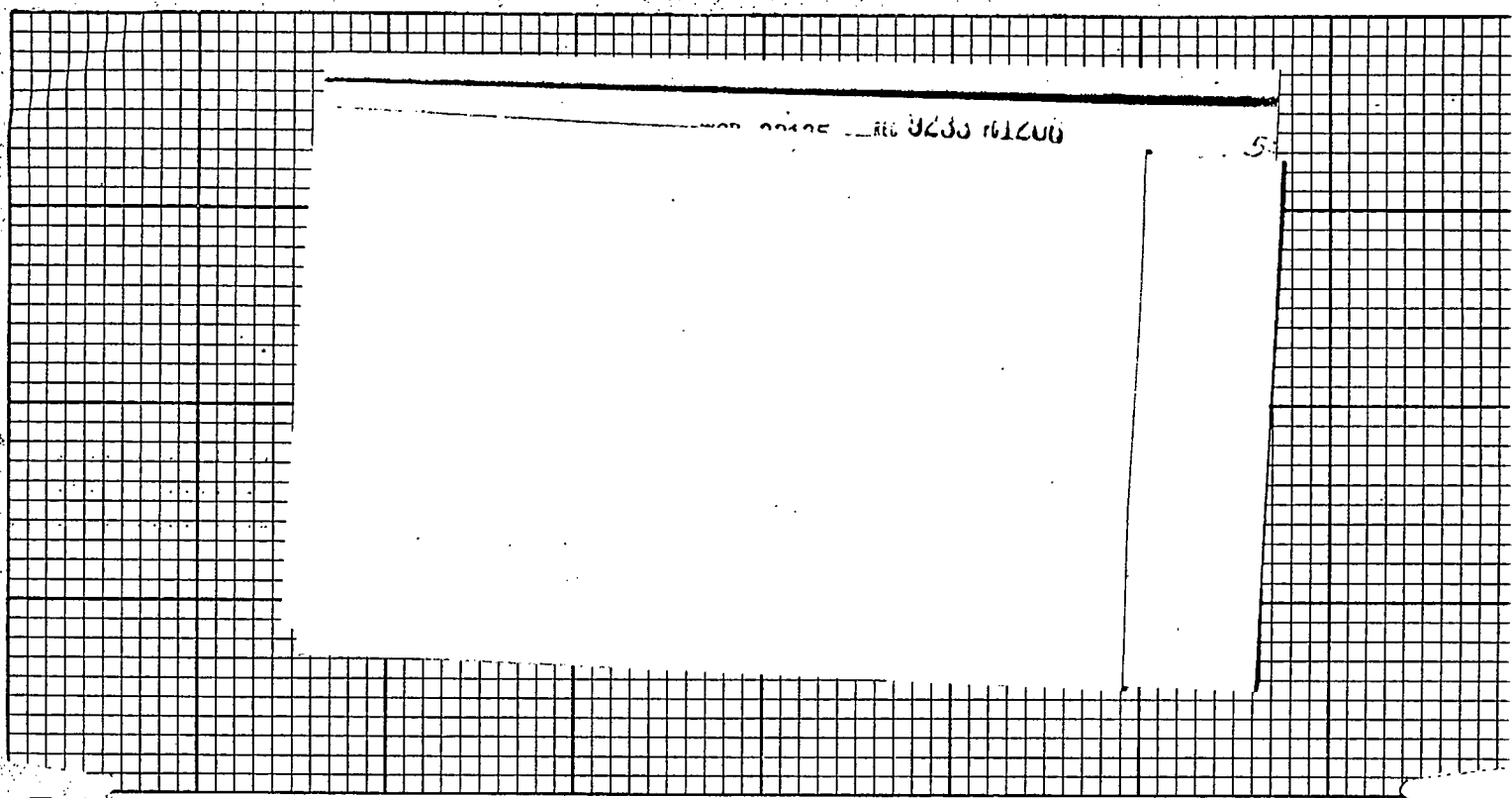

PLOT SIZE	AREA □	ZONING	MAXIMUM BLDG. HEIGHT	MINIMUM LAND AREA	MINIMUM BLDG. AREA
100 ~~150~~ x 150	R1C	~~R-1-AA~~	35'	~~6000~~ 5,500	900

UTILITIES	AVAIL.	CONN.	UTILITIES	AVAIL.	CONN.	STREET IMPROVEMENTS				FIRE PROTECTION	
WATER		X	SEWERAGE			PAVING		CURBS		CITY	X
ELECTRICITY		X				WALKS		ALLEYS	X	VOLUNTEER	

BUILDING SPECIFICATIONS

AGE (YRS.)		ROOF		INTERIOR WALLS		SOLAR HEATER		
STORIES	1	BUILT-UP	X	FURRED		SEPTIC TANK	X	
ROOMS	5	ROLLED		PLASTER		MASONRY		
BEDROOMS	2	SLATE SURFACE SHINGLE		PAINTED		DRIVE		
CONSTRUCTION		CLAY TILE				WALLS		
C.B.S.	X	CEMENT TILE		HEAT		WALKS	X	
FRAME				FIRE PLACE				
FRAME STUCCO		WINDOW SASH				GARAGE		
ASB. SIDING		STEEL CASEMENT		BATHS		1 CAR		
PORCH	#1 #2	WOOD	X	BATH ROOMS 1 2 3		2 CAR		
SCREEN		DOUBLE HUNG		NO. FIXTURES	3	DETACHED		
TILE FLOOR		AWNING TYPE STEEL		TILE FLOOR	X	ATTACHED		
CEMENT FL.	X	AWNING TYPE WOOD		CEMENT FL.		CONSTN.		
WOOD FL.				WOOD FLOOR		PORTE COCHERE	X	

CALCULATIONS

ITEM	BLDG. A	BLDG. B	BLDG. C	BLDG. D
SQUARE FT.	1010	200		
RATE	7.50	4.00		
COST	7575.	800		
PHYS. % DEPRECIATION				
FUNC. % DEPRECIATION				
TOTAL DEPRECIATION				
BUILDING VALUE	7575.			
LAND VALUE				
TOTAL VALUE				

Bldg B Storage Room BP 1955-17
BP#308-remodel & encl.openings - 5/20/71

NP 2723

	DATE	TOTAL LAND	TOTAL IMPROV.	GRAND TOTAL	AUTHORITY
ORIGINAL VALUATION	1-1-58	2,500	7,400	9,900	Town Council
1ST ADJUSTMENT	1-1-59	3,850	7,400	11,250	LVR
2ND ADJUSTMENT	1-1-60	3,850	6,700	10,550	Dep-700
3RD ADJUSTMENT					
4TH ADJUSTMENT					
5TH ADJUSTMENT					

LEGAL DESCRIPTION 18-19 53 41

Cinema Park Block 58 Lot 1; Lot 2; PB 17-2

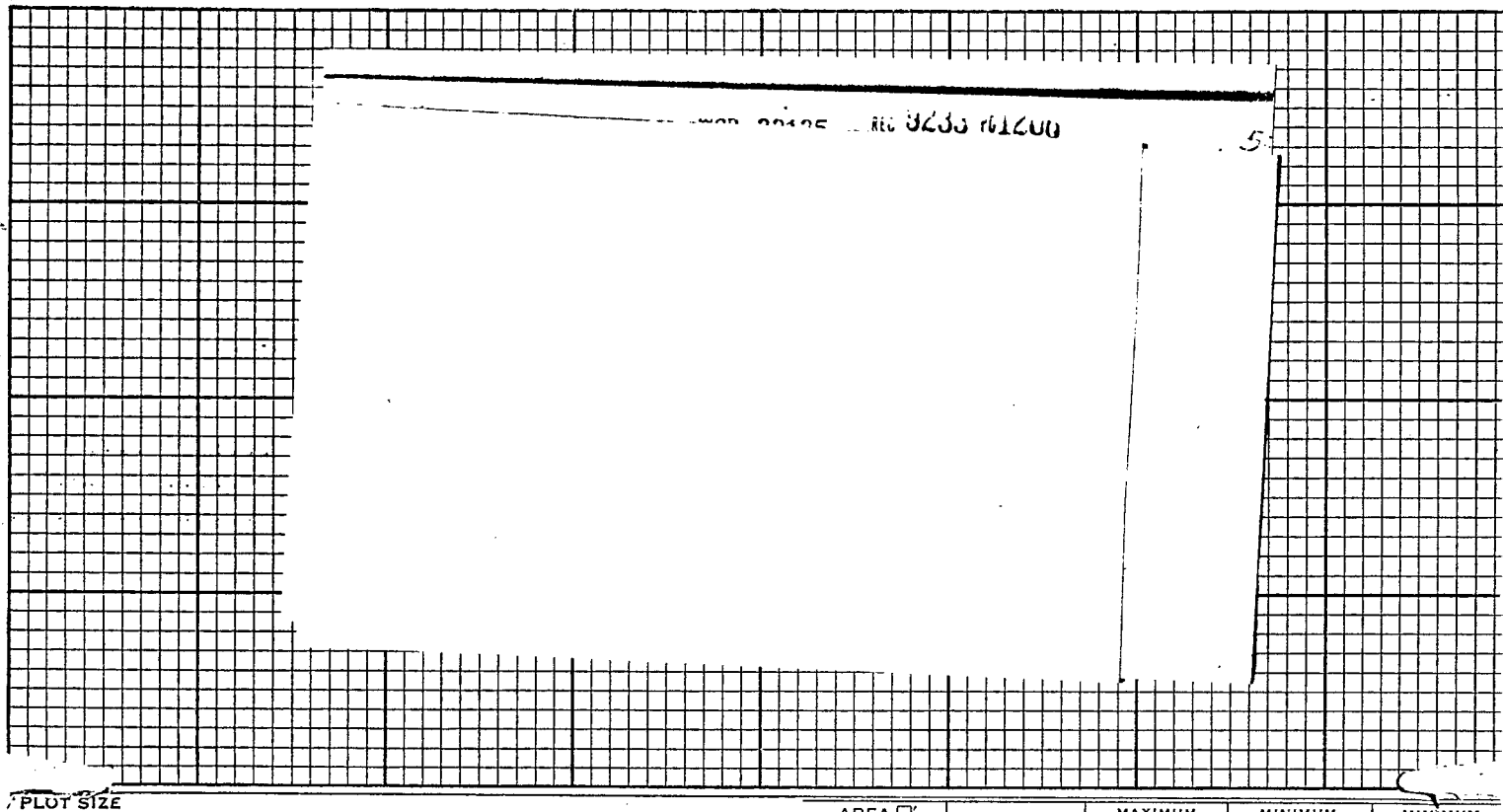

PLOT SIZE	AREA □'	ZONING	MAXIMUM BLDG. HEIGHT	MINIMUM LAND AREA	MINIMUM BLDG. AREA
100 ~~150~~ x 150	R1C	~~R-1-AA~~	35'	~~6000~~ 5,500	900

UTILITIES	AVAIL.	CONN.	UTILITIES	AVAIL.	CONN.	STREET IMPROVEMENTS				FIRE PROTECTION	
WATER		X	SEWERAGE			PAVING		CURBS		CITY	X
ELECTRICITY		X				WALKS		ALLEYS	X	VOLUNTEER	

BUILDING SPECIFICATIONS								CALCULATIONS				
AGE (YRS.)		ROOF		INTERIOR WALLS		SOLAR HEATER		ITEM	BLDG. A	BLDG. B	BLDG. C	BLDG. D
STORIES	1	BUILT-UP	X	FURRED		SEPTIC TANK	X	SQUARE FT.	1010	200		
ROOMS	5	ROLLED		PLASTER		MASONRY		RATE	7.50	4.00		
BEDROOMS	2	SLATE SURFACE SHINGLE		PAINTED		DRIVE		COST	7575.	800		
CONSTRUCTION		CLAY TILE				WALLS		PHYS. % DEPRECIATION				
C.B.S.	X	CEMENT TILE		HEAT		WALKS	X	FUNC. % DEPRECIATION				
FRAME				FIRE PLACE				TOTAL DEPRECIATION				
FRAME STUCCO		WINDOW SASH STEEL				GARAGE		BUILDING VALUE	7575.			

ORIGINAL VALUATION	1-1-49	2275.	7575.	9850.	WCW
1ST ADJUSTMENT	2-27-50	2275.	7348.	9623.	Town Council
2ND ADJUSTMENT	1-1-53	1525	7348	8873	Sold Lot 3 12-55
3RD ADJUSTMENT	1-1-55	2500.	6600.	9100.	Land +975. Dep. -748.
4TH ADJUSTMENT	1-1-56	2,500	7,400	9,900	BP 1955-17 CO 11/23/55
5TH ADJUSTMENT	1-1-58	3,850.	7,400.	11,250.	LVR

LEGAL DESCRIPTION

Cinema Park Block 58 Lot 1 Lot 2

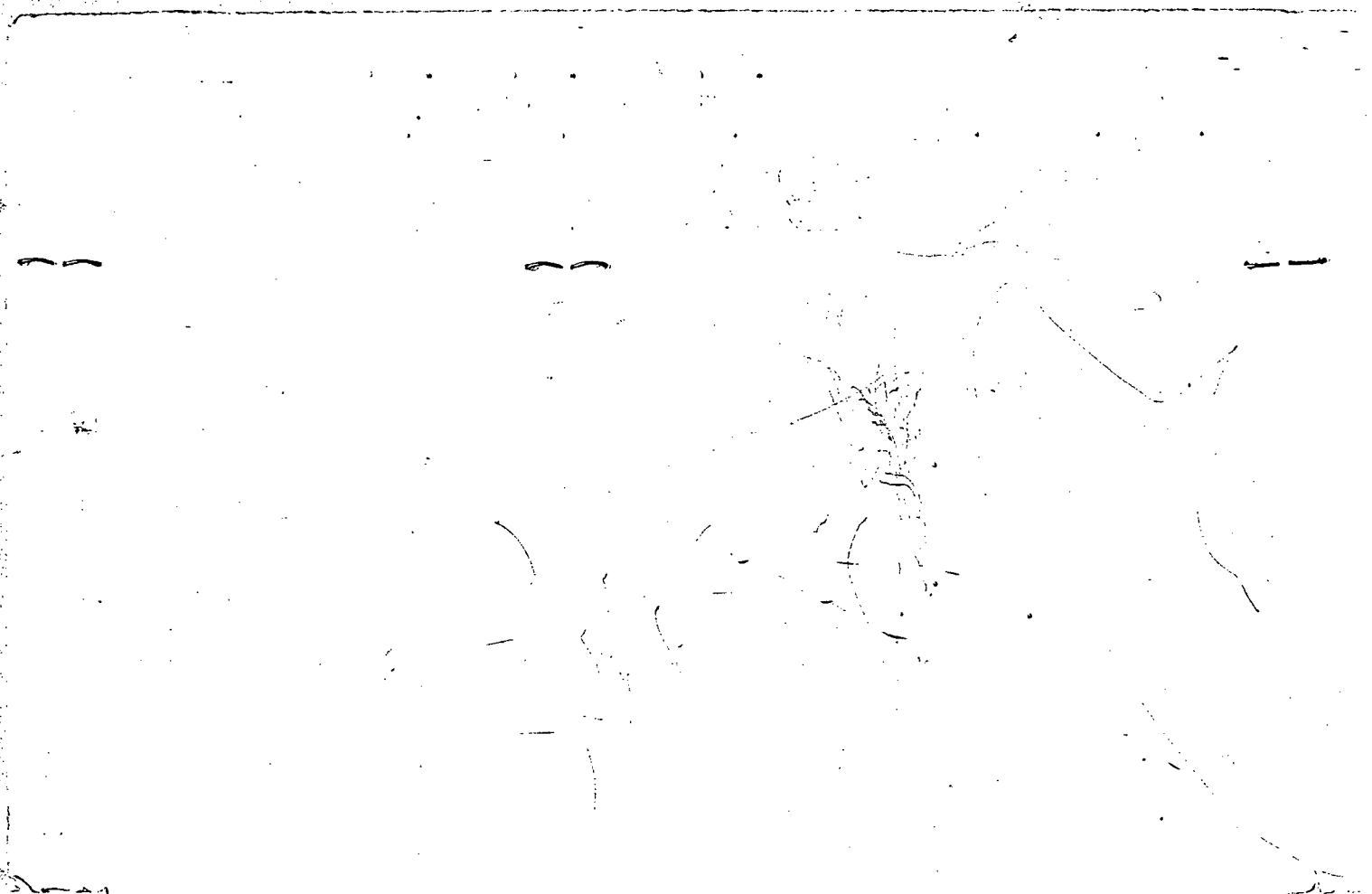

1- 2- 3-4-5- 8- 9- 0- 1.

OWNER	OWNER	LEGAL
200 Esplanade Drive		
~~James Clark Eyres,~~		
~~851 Hunting Ledge Dr.,~~		RIC
~~Local 4/19/47~~		REF
~~200 Esplanade~~		150.43
~~Margaret Windsor Eyres Sgle~~		
200 ~~Esplanade Dr. Local~~		
10 ~~27-61 st. 20~~		
~~Joseph Patrick Bussey & w. Dorothy~~		
~~533 Mokena Dr.~~ QCD 2/76		
~~(Lives here)~~		
THOMAS WAYNE JACKSON & w		
PATRICE BUSSEY JACKSON		
200 N. Esplanade Dr.		
QCD 11-14-77 24,000		
		3118 [illegible]

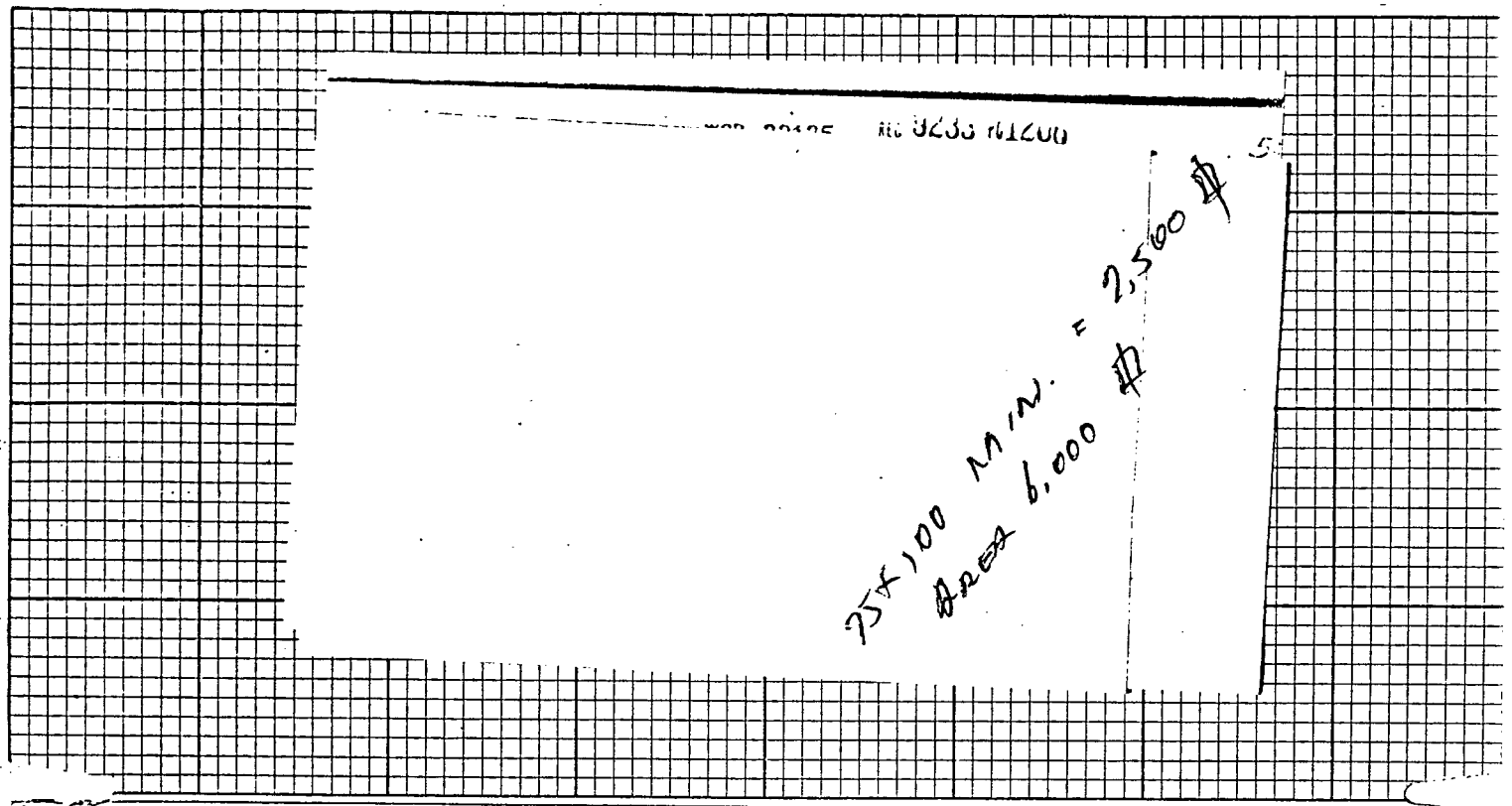

PLOT SIZE
100
150 x 150

AREA ☐ R1C

ZONING	MAXIMUM BLDG. HEIGHT	MINIMUM LAND AREA	MINIMUM BLDG. AREA
~~R-1-AA~~	35'	~~5,500~~ 6000	900

UTILITIES	AVAIL.	CONN.	UTILITIES	AVAIL.	CONN.	STREET IMPROVEMENTS				FIRE PROTECTION	
WATER		X	SEWERAGE			PAVING		CURBS		CITY	X
ELECTRICITY		X				WALKS		ALLEYS	X	VOLUNTEER	

BUILDING SPECIFICATIONS

AGE (YRS.)		ROOF		INTERIOR WALLS		SOLAR HEATER		
STORIES	1	BUILT-UP	X	FURRED		SEPTIC TANK	X	
ROOMS	5	ROLLED		PLASTER		MASONRY		
BEDROOMS	2	SLATE SURFACE SHINGLE		PAINTED		DRIVE		
CONSTRUCTION		CLAY TILE				WALLS		
C.B.S.	X	CEMENT TILE		HEAT		WALKS	X	
FRAME				FIRE PLACE				
FRAME STUCCO		WINDOW SASH				GARAGE		
ASB. SIDING		STEEL CASEMENT		BATHS		1 CAR		
PORCH #1	#2	WOOD	X	BATH ROOMS 1 2 3		2 CAR		
SCREEN		DOUBLE HUNG		NO. FIXTURES	3	DETACHED		
TILE FLOOR		AWNING TYPE STEEL		TILE FLOOR	X	ATTACHED		
CEMENT FL.	X	AWNING TYPE WOOD		CEMENT FL.		CONSTN.		
WOOD FL.				WOOD FLOOR		PORTE COCHERE	X	

CALCULATIONS

ITEM	BLDG. A	BLDG. B	BLDG. C	BLDG. D
SQUARE FT.	1010	200		
RATE	7.50	4.00		
COST	7575.	800		
PHYS. % DEPRECIATION				
FUNC. % DEPRECIATION				
TOTAL DEPRECIATION				
BUILDING VALUE	7575.			
LAND VALUE				
TOTAL VALUE				

Bldg B Storage Room BP 1955-17
BP#308-remodel & encl.openings - 5/20/71

NP 2723

	DATE	TOTAL LAND	TOTAL IMPROV.	GRAND TOTAL	AUTHORITY
ORIGINAL VALUATION	1-1-58	2,500	7,400	9,900	Town Council
1ST ADJUSTMENT	1-1-59	3,850	7,400	11,250	LVR
2ND ADJUSTMENT	1-1-60	3,850	6,700	10,550	Dep-700
3RD ADJUSTMENT					
4TH ADJUSTMENT					
5TH ADJUSTMENT					

LEGAL DESCRIPTION

18-19 53 41

Cinema Park Block 58 Lot 1; Lot 2; PB 17-2

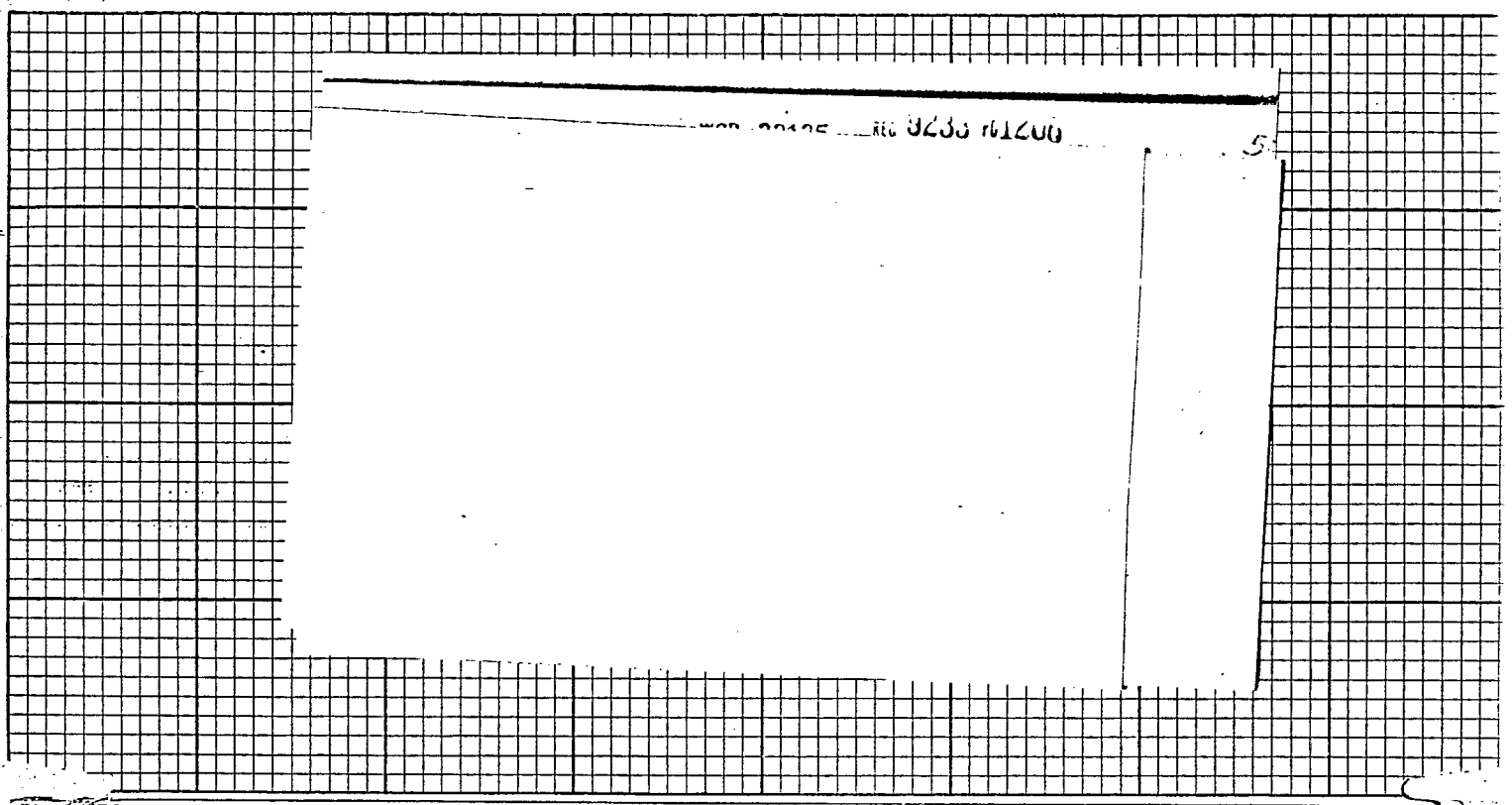

PLOT SIZE	AREA □	ZONING	MAXIMUM BLDG. HEIGHT	MINIMUM LAND AREA	MINIMUM BLDG. AREA
100 ~~150~~ x 150	RIC	~~R-1-AA~~	35'	~~6000~~ 5,500	900

UTILITIES	AVAIL.	CONN.	UTILITIES	AVAIL.	CONN.	STREET IMPROVEMENTS				FIRE PROTECTION	
WATER		X	SEWERAGE			PAVING		CURBS		CITY	X
ELECTRICITY		X				WALKS		ALLEYS	X	VOLUNTEER	

BUILDING SPECIFICATIONS								CALCULATIONS				
AGE (YRS.)		ROOF		INTERIOR WALLS		SOLAR HEATER		ITEM	BLDG. A	BLDG. B	BLDG. C	BLDG. D
STORIES	1	BUILT-UP	X	FURRED		SEPTIC TANK	X	SQUARE FT.	1010	200		
ROOMS	5	ROLLED		PLASTER		MASONRY		RATE	7.50	4.00		
BEDROOMS	2	SLATE SURFACE SHINGLE		PAINTED		DRIVE		COST	7575.	800		
CONSTRUCTION		CLAY TILE				WALLS		PHYS. % DEPRECIATION				
C.B.S.	X	CEMENT TILE		HEAT		WALKS	X	FUNC. % DEPRECIATION				
FRAME				FIRE PLACE				TOTAL DEPRECIATION				
FRAME STUCCO		WINDOW SASH STEEL				GARAGE		BUILDING VALUE	7575.			

ORIGINAL VALUATION	1-1-49	2275.	7575.	9850.	WCW
1ST ADJUSTMENT	2-27-50	2275.	7348.	9623.	Town Council
2ND ADJUSTMENT	1-1-53	1525	7348	8873	Sold Lot 3 17-55
3RD ADJUSTMENT	1-1-55	2500.	6600.	9100.	Land +975. Dep. -748.
4TH ADJUSTMENT	1-1-56	2,500	7,400	9,900	BP 1955-17 CO 11/23/55
5TH ADJUSTMENT	1-1-58	3,850.	7,400.	11,250.	LVR

LEGAL DESCRIPTION 18-19 53 11

Cinema Park Block 58 Lot 1, Lot 2,

200 FALCON
150'x100' R1C
SFS DISTRICT.

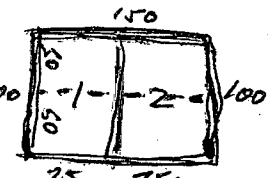

(2) SURVEYS (ORIGINAL 75x100' LINES)

LOT I (MODIFIED 75x100')

CONTAINS AN EXISTING IMPROVEMENT. (Year Built _____)

DIAGRAM (a) CUT-OFF MAIN HOUSE TO ACHIEVE REGULATED SETBACKS.

DIAGRAM (b) CUT-OFF MAIN HOUSE TO ACHIEVE REGUCATED SETBACKS.

ANY DEVIATION FROM PLAN (a) OR (b) IS A VARIANCE SUBJECT TO Bd. & COUNCIL APPROVAL.

* REVERSE FRONTAGE (CORNER HOUSE) CAN BE GRANTED TO ASSIST OWNER IN EITHER CASE SELECTED.

LOT II (MODIFIED 75x100')

FREE OF IMPROVEMENTS. VACANT LAND UNDER UNITY OF TITLE WITH LOT I.

UG.

*ALL UTILITIES (FOR BOTH LOTS) MUST BE APPROVED BY P.G., FP&L., SOU BELL, City Gas, DYNAMIC CABLE BEFORE REQUESTING WAIVER OF PLAT.

(1) WOR LINE SHOWN IN BLUE

(2) SWR LINE SHOWN IN RED

(3) EASEMENT DESCRIBED ALONG S. SIDE OF LOT II IS SHOWN IN DOTTED LINES 5' IN WIDTH: UTILITIES CAN OCCUPY SAME EXCAVATION DEPENDING ON THEIR RULES FOR INVERT MEASUREMENTS.

PO 4873

CITY OF MIAMI SPRINGS

THIS CARD MUST BE DISPLAYED ON FRONT OF JOB

PENALTY FOR REMOVAL UNTIL JOB IS COMPLETED.

NO._____ Date_____ 19___

This Permit Expires 90 Days After Date of Issue.

Renewal for 90 days may be obtained by payment of one-half of original permit.

BUILDING PERMIT

REF 5,

Footing 150.43 RIC Subfloor 150.13

Tiebeam SWR S (50) CH Framing 150.19 150.20

Roofing Dec 1/65 Final

7-27-70

PLUMBING ELECTRIC

Oct 501

Rough & Tub 1-24-72 Temporary

Sewer 50-17 Rough

FINAL FINAL

Owner

Contractor

Lot Block Sub

No. St. or Dr.

THIS PERMIT DOES NOT INCLUDE THE INSTALLATION OF ELECTRICAL OR PLUMBING WORK. SEPARATE PERMITS MUST BE SECURED FROM THE ELECTRICAL INSPECTION DIVISION AND THE PLUMBING INSPECTION DIVSION BEFORE ANY ELECTRICAL OR PLUMBING WORK CAN BE STARTED.

FOR FOLLOWING INSPECTIONS GIVE FIVE HOURS NOTICE TO BUILDING DIVISION——PHONE 885-4581

STEEL INSPECTIONS——Footings, Tie Beams, Concrete Slabs, Rake Beams, before placing concrete.

FRAMING INSPECTION——Before Lathing.

FINAL INSPECTION——For Certificate of Occupancy.

FACT SHEET

200 FALCON AVE.

OWNER: JACKSON

AGENT: ZAHN

150' x 100' R1C SFD DISTRICT

LEGAL: CINEMA PK BL. 58 LOTS 1 and 2 x 150'

USE BUILT 1-1-49 SPANNING (2) 50' LOTS

NEW SURVEY BY MANUCY 8/31/83 SHOWS DESIRED (2) LOTS.

OLD SURVEY BY KNOX 2/20/48 SHOWS EXISTING LOT LINES.

MS 10-57

TOWN OF MIAMI
[illegible]DING INSPECTORS PROG[illegible] REPORT
* *

Permit No. 17 Date Issued 1/24/55

Lot (s) 1 & 2 Block - 58 Section C.P.

Street Address 200 Esplanade

Owner's Name and Address
J. C. Eyres
200 Esplanade

Contractor's Name and Address
O-B

	% Compl.	Date Inspected	Remarks
1. Footings	5	2/1/55	[illegible]
2. Foundation	10		
3. Joists & Sub-Floor	15		
4. Walls	25		
5. Beam	30		
6. Ceiling Joists	35		
7. Rafters & Sheathing	40		
8. Partitions	50		
9. Windows	55		
10. Roof	65		
11. Lath & Plaster	80		
12. Finished Floor	90		
13. Trim	100		
14. Painting			
15. Certificate of Occupancy			

Estimated Cost $ 800.00

Date Completed 12/20/

Sq. Ft 200

[illegible]
Building Inspector

Completed

Carded

BUILDING SPECIFICATIONS

Storage

No. BLDGS.	1	ROOF		INTERIOR WALLS		SOLAR HEATER	
STORIES	1	BUILT-UP	X	FURRED		SEPTIC TANK	
ROOMS	1	ROLLED		PLASTER		MASONRY	
BEDROOMS		Slate Surface Shingle		PAINTED		DRIVE	
CONSTRUCTION		CLAY TILE				WALLS	
C. B. S.	X	CEMENT TILE		HEAT		WALKS	
FRAME				FIRE PLACE			
FRAME STUCCO		WINDOW SASH				GARAGE	
ASB. SIDING		STEEL CASEMENT	X	BATHS		1 CAR	
PORCH #1 #2		WOOD		BATH ROOMS 1 2 3		2 CAR	
SCREEN		[illegible]		No. Fixtures		DETACHED	
TILE FLOOR		[illegible]		TILE FLOOR		ATTACHED	
CEMENT FL.		[illegible] Wood		CEMENT FL.		CONSTN.	
WOOD FL.				WOOD FLOOR		PORTE COCHERE	

CALCULATIONS

ITEM	BLDG. A	BLDG. B	BLDG. C	Summary of Land & Improvements
SQUARE FT.		200		
RATE		4 00		
COST		800 00		

10-52/4227

TOWN OF MIAMI SPRINGS, DADE COUNTY, FLORIDA

OFFICE OF BUILDING INSPECTOR

Application for Building Permit

No. 17

THIS APPLICATION MUST BE SUBMITTED IN DUPLICATE, ACCOMPANIED BY TWO (2) SETS OF PLANS AND SPECIFICATIONS.

Date 1 - 21 19 55

Application is hereby made for approval of the detailed statement of plans and specifications for the building, or other structure, herein described. The Applicant hereby agrees that all provisions of the Laws of the State of Florida, and all Ordinances of the Town of Miami Springs, Florida, will be complied with.

Owner's Name and Address J. Eyres Street ..... No. .....

Architect .....

Name and address of contractor or builder .....

LIST PLUMBING, ELECTRICAL, FLOORING AND OTHER SUB-CONTRACTORS ON REVERSE SIDE.

Location and legal description of lot to be built on:

Lot(s) 1 + 2 Block 58 Subdivision C. P.

Street and Number where work is to be done 200 Esplanade Dr

Purpose of Building: House..... Multi-family..... Commercial.....

New Building..... Remodeling..... Addition ✓ Repairs..... No. of Stories.....

To be constructed of..... Kind of foundation..... Roof Covering.....

Distance to next nearest building..... Size of Building Lot.....

I hereby swear, or affirm, that the facts stated hereon are true.

J. C. Eyres
Signature of Applicant

DO NOT USE THIS SPACE

Floor area, sq. ft.	200
Est. Cost, sq. ft.	$ 4.00
Est. Total Cost	$ 800.00
Bldg. Permit Fee	$ 5.00
Approved	H. W. Richman Building Inspector
Approved	Brr. H. W. R. Plumbing Inspector
Approved	Eyres Electrical Inspector

This space represents the Lot; Indicate the building in space showing the distance from lot lines and other buildings.

Storage Room
10'-0" X 20'-0"

This permit expires six (6) months from date of issue, but, may be renewed for one additional six (6) month period on application and payment of one-half of the original fee.

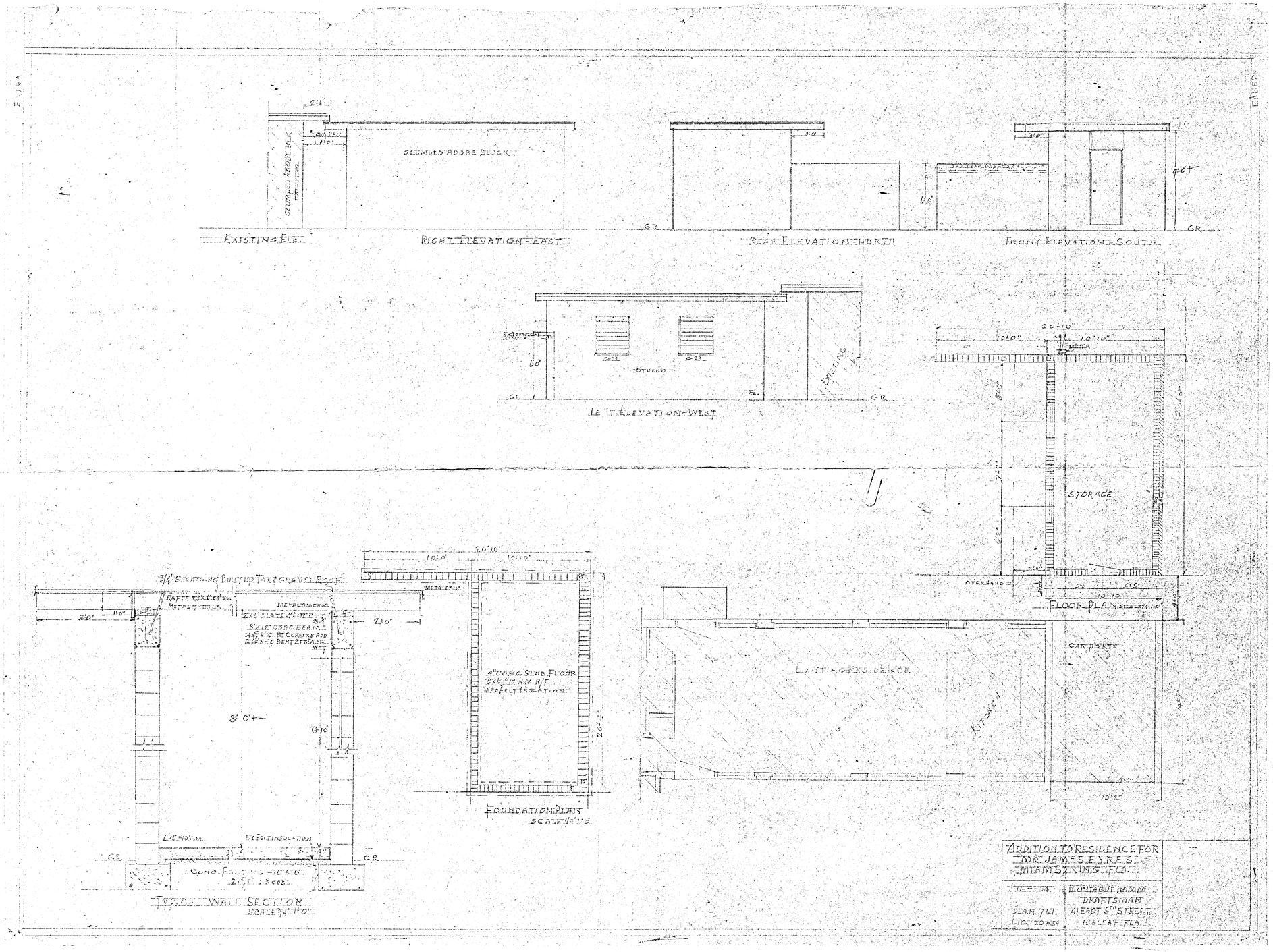
EXISTING ELEV.
RIGHT ELEVATION - EAST
SLUMPED ADOBE BLOCK
REAR ELEVATION - NORTH
FRONT ELEVATION - SOUTH
LEFT ELEVATION - WEST
STUCCO
EXISTING
STORAGE
OVERHANG
FLOOR PLAN
CARPORTE
EXISTING RESIDENCE
KITCHEN
3/4" SHEATHING BUILT UP TAR & GRAVEL ROOF
METAL ANCHOR
4" CONC. SLAB FLOOR
FOUNDATION PLAN
TYPICAL WALL SECTION
ADDITION TO RESIDENCE FOR
MR. JAMES EYRES
MIAMI SPRING FLA.
MONTAGUE HAMM
DRAFTSMAN
4 EAST 5TH STREET
HIALEAH FLA.
PLAN 767
LIC. 120-54

TOWN OF MIAMI SPRINGS, FLA.
APPROVED
BUILDING INSPECTOR
PLUMBING INSPECTOR
ELECTRICAL INSPECTOR

J.H. MANUCY, INC.

PROFESSIONAL LAND SURVEYORS

4694 Palm Avenue Suite 203 • Hialeah Florida 33012
DADE: (305) 821-1281 • (305) 821-1220 BROWARD (305) 563-2066

I HEREBY CERTIFY THAT THIS PLAT OF SURVEY WAS PREPARED UNDER MY DIRECTION; THAT IT MEETS THE MINIMUM TECHNICAL STANDARDS FOR LAND SURVEYING IN THE STATE OF FLORIDA (CHAPTER 21HH-6 FLORIDA ADMINISTRATIVE CODE) FOR THE TYPE OF SURVEY SHOWN HEREON AND IS TRUE AND CORRECT TO THE BEST OF MY KNOWLEDGE AND BELIEF.

J.H. Manucy, Professional Land Surveyor #1128
John F. Pulice, Professional Land Surveyor #2691

State of Florida Date September 1, 1983

BOUNDARY SURVEY

WAIVER OF PLAT:
8/13/84
* LEGAL DESCRIPTION
a.k.a. 200 ESPLANADE
M.S.C.O. SEC. 150, 151, 152
K.W. Wells
BUILDING OFFICIAL, CITY OF MIAMI SPRINGS

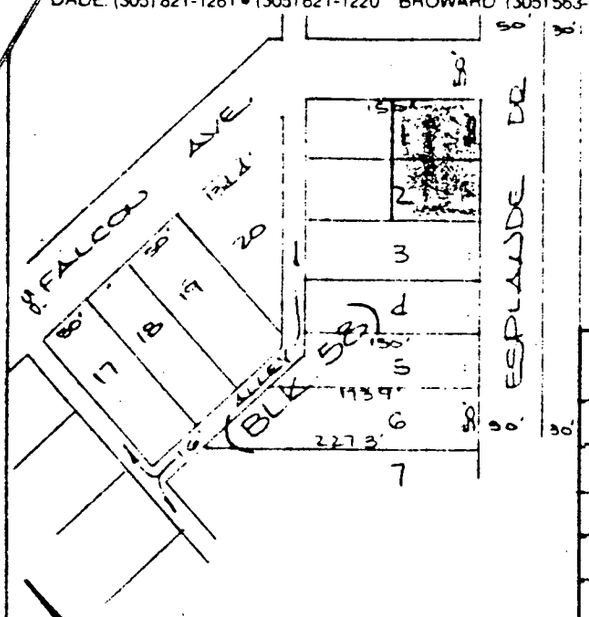

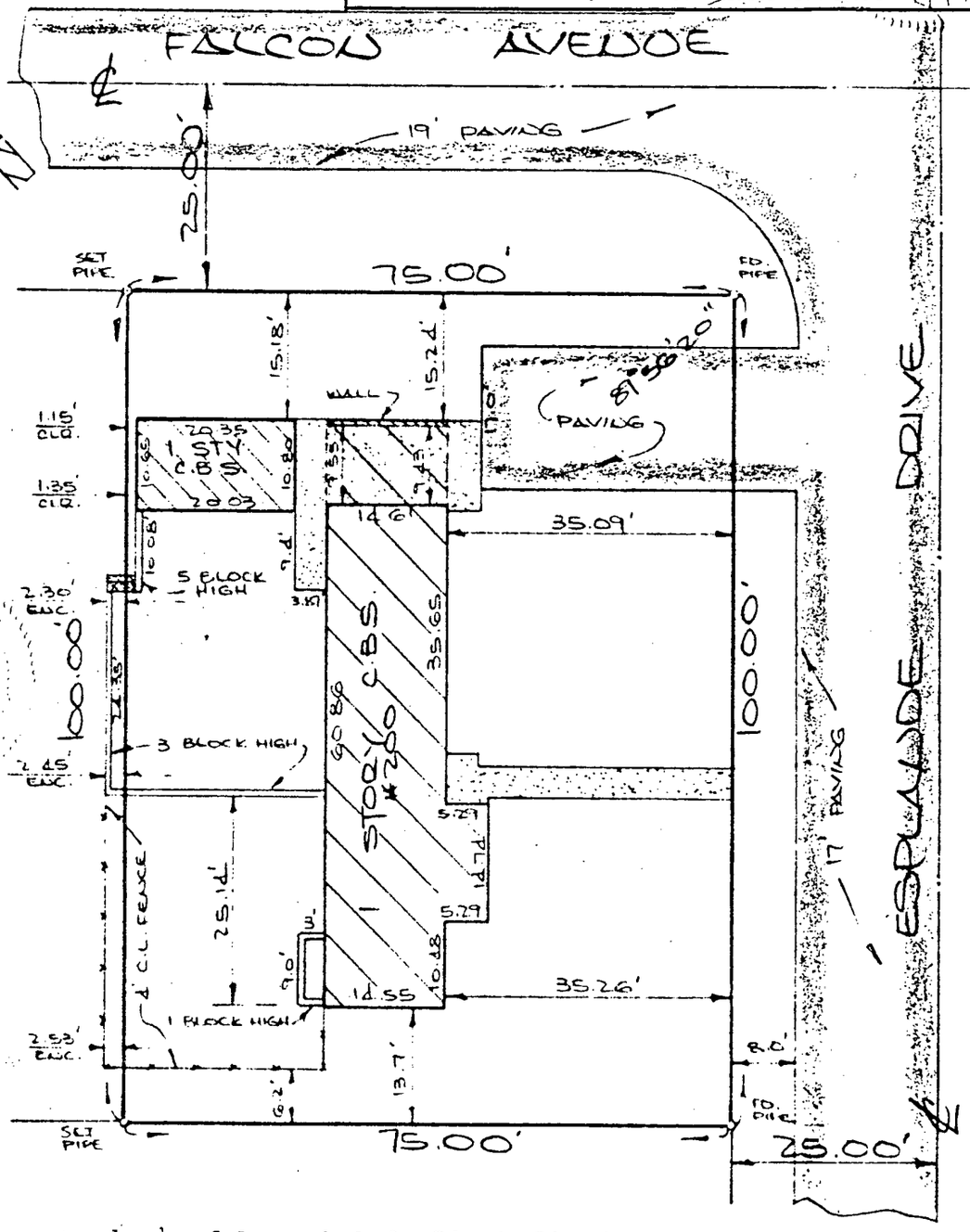

Certified to be a true copy of Waiver of Plat duly executed at Miami City Hall, 201 Westward Dr., Miami Springs, FL.
Deputy City Clerk

* The Southeasterly ½ of Lots 1 & 2, Block 58 of CINEMA PARK ADDITION TO COUNTRY CLUB ESTATES
as recorded in Plat Book 17 at Page 2 according to the Plat thereof of the Public Records of Dade County, Florida.

FOR Thomas W. Jackson DATE August 31, 1983

SCALE 1" = 20' ORDER No. 27237 F.B. A152-49 REV.

REV.

OFF REC 12236 PG 868

WARRANTY DEED
FROM INDIVIDUAL TO CORPORATION

RAMCO FORM 34

This Warranty Deed *Made the* 3rd. *day of* August *A. D. 19* 84 *by*
Thomas W. Jackson, A single person
hereinafter called the grantor, to Irving H. Zahn

a corporation existing under the laws of the State of Florida *, with its permanent postoffice address at* 78 Canal Street, Miami Springs, Florida 33166 *hereinafter called the grantee:*

(Wherever used herein the terms "grantor" and "grantee" include all the parties to this instrument and the heirs, legal representatives and assigns of individuals, and the successors and assigns of corporations)

Witnesseth: *That the grantor, for and in consideration of the sum of* $ *and other valuable considerations, receipt whereof is hereby acknowledged, hereby grants, bargains, sells, aliens, remises, releases, conveys and confirms unto the grantee, all that certain land situate in* County, Florida, *viz:*

84 AUG 28 A10:
CITY OF MIAMI SPRI

recorded 5/85 bmc

Lots 1 and 2, Block 58, CINEMA PARK ADDITION TO COUNTRY CLUB ESTATES, according to the plat thereof as recorded in Plat Book 17 at Page 2 of the Public Records of Dade County, Florida.

$ 337.50 Documentary Stamps Collected
Dade County
Richard P. Brinker
Clerk, Circuit & County Courts
By Flopez 8-14-84 DC

Together *with all the tenements, hereditaments and appurtenances thereto belonging or in anywise appertaining.*

To Have and to Hold, *the same in fee simple forever.*

And *the grantor hereby covenants with said grantee that the grantor is lawfully seized of said land in fee simple; that the grantor has good right and lawful authority to sell and convey said land; that the grantor hereby fully warrants the title to said land and will defend the same against the lawful claims of all persons whomsoever; and that said land is free of all encumbrances, except taxes accruing subsequent to December* 31, 19

In Witness Whereof, *the said grantor has hereunto set* my *hand and seal the day and year first above written.*

Signed, sealed and delivered in our presence:

Nina J. McMullen — Thomas W Jackson (L.S.)

(L.S.)

STATE OF FLORIDA,
COUNTY OF Dade

I HEREBY CERTIFY that on this day, before me, an officer duly authorized in the State aforesaid and in the County aforesaid to take acknowledgments, personally appeared Thomas W. Jackson, A single person

to me known to be the person described in and who executed the foregoing instrument and He acknowledged before me that He executed the same.

WITNESS my hand and official seal in the County and State ast aforesaid this 3rd day of August, A. D. 19 84

NOTARY PUBLIC STATE OF FLORIDA
MY COMMISSION EXP. JUN 15,1988
BONDED THRU GENERAL INS. UND.

Nina J. McMullen

NOTARY PUBLIC STATE OF FLORIDA AT LARGE

This Instrument prepared by: Irving H. Zahn
Address 78 Canal Street
Miami Springs, Fl. 33166

RECORDED IN OFFICIAL RECORDS BOOK OF DADE COUNTY, FLORIDA.
RECORD VERIFIED
RICHARD P. BRINKER
CLERK CIRCUIT COURT

J.H. MANUCY, INC.

PROFESSIONAL LAND SURVEYORS

4694 Palm Avenue, Suite 203 • Hialeah, Florida 33012
DADE: (305) 821-1281 • (305) 821-1220 BROWARD: (305) 563-2066

I HEREBY CERTIFY THAT THIS PLAT OF SURVEY WAS PREPARED UNDER MY DIRECTION, THAT IT MEETS THE MINIMUM TECHNICAL STANDARDS FOR LAND SURVEYING IN THE STATE OF FLORIDA (CHAPTER: 21HH-6, FLORIDA ADMINISTRATIVE CODE) FOR THE TYPE OF SURVEY SHOWN HEREON AND IS TRUE AND CORRECT TO THE BEST OF MY KNOWLEDGE AND BELIEF.

J.H. Manucy, Professional Land Surveyor #1128
John F. Pulice, Professional Land Surveyor #2[illegible]

State of Florida September 1, 1983

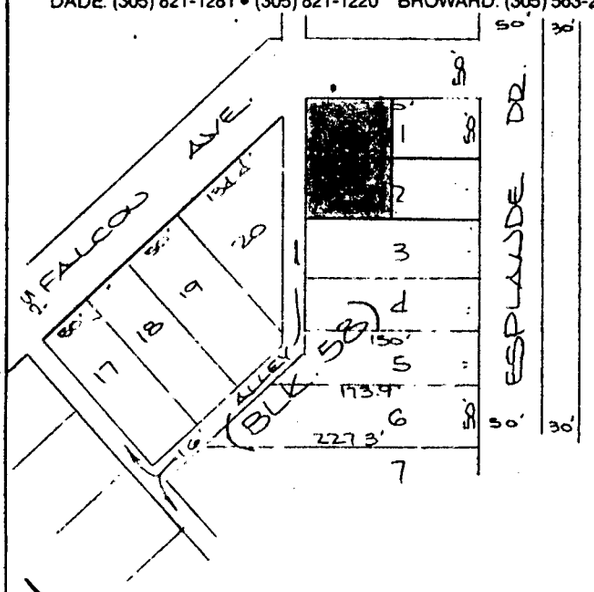

BOUNDARY SURVEY

MR: DAVE WELLS: PER OUR CONVERSATION JULY 23, 1984 WE AGREE WITH THE EASTMENT SHOWN BELOW GRANTED BY MR. IRVING H. ZAHN TO SBT. Co.

Hector B. Choo.
ENGINEER FOR S.B.T. Co.

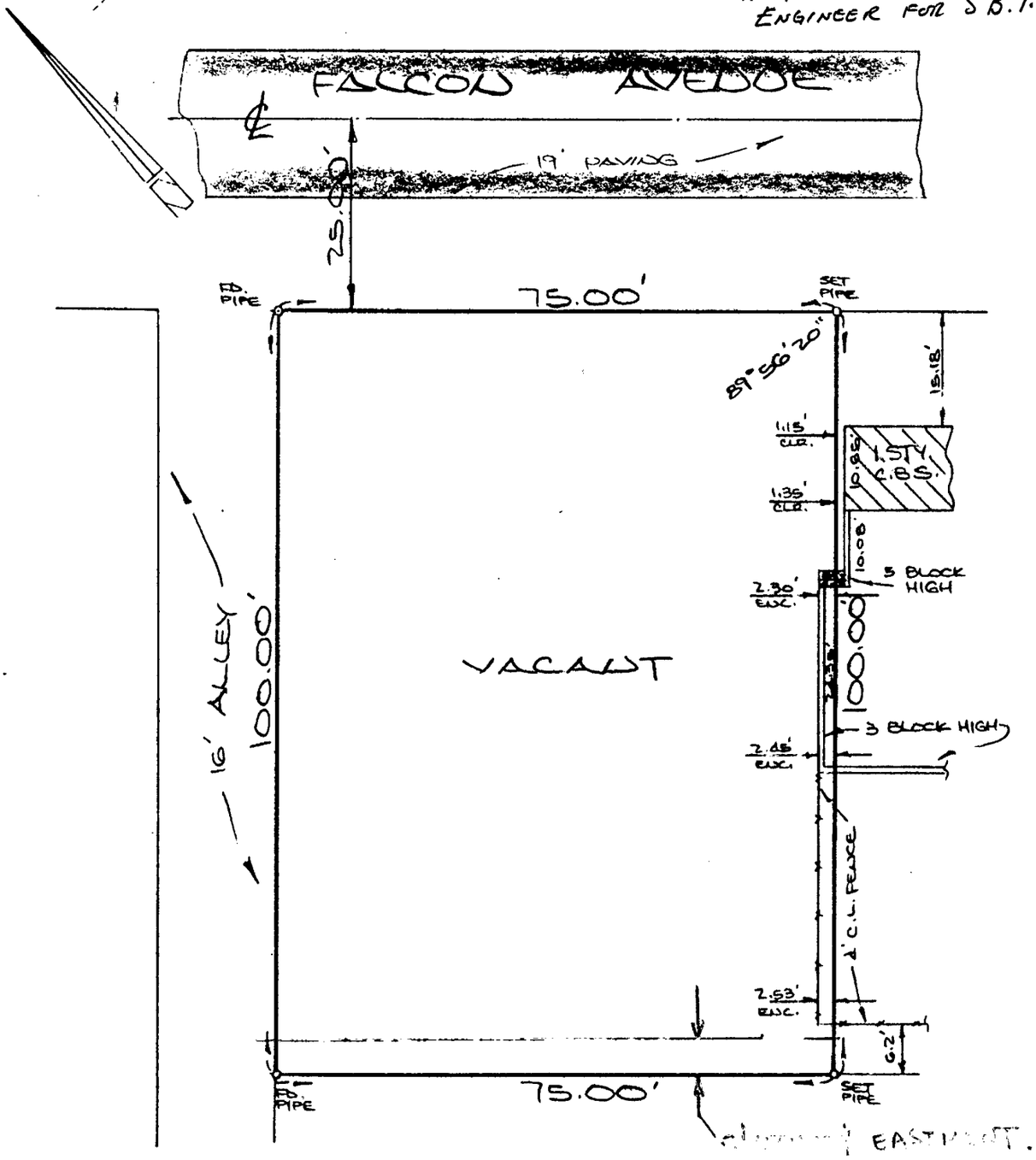

The Northwesterly ½ of Lots 1 & 2, Block 58 of CINEMA PARK ADDITION TO COUNTRY CLUB ESTATES according to the Plat thereof as recorded in Plat Book 17 at Page 2 of the Public Records of Dade County, Florida.

FOR: Thomas W. Jackson DATE: August 31, 1983

SCALE: 1" = 20' ORDER No. 27237 F.B. A152-49 REV.

REV.

J.H. MANUCY, INC.

PROFESSIONAL LAND SURVEYORS

4694 Palm Avenue Suite 203 • Hialeah Florida 33012
DADE (305) 821-1281 • (305) 821-1220 BROWARD (305) 563-2060

I HEREBY CERTIFY THAT THIS SURVEY WAS PREPARED UNDER MY DIRECTION THAT IT MEETS THE MINIMUM TECHNICAL STANDARDS FOR LAND SURVEYING IN THE STATE OF FLORIDA (CHAPTER 21HH-6 FLORIDA ADMINISTRATIVE CODE) FOR THE TYPE OF SURVEY SHOWN HEREON AND IS TRUE AND CORRECT TO THE BEST OF MY KNOWLEDGE AND BELIEF.

J.H. Manucy, Professional Land Surveyor #1168
John F. Puice, Professional Land Surveyor #2692

State of Florida Date: September 1, 1983

STATE OF FLORIDA JOHN F. PUICE CERTIFICATE No. 2692

BOUNDARY SURVEY

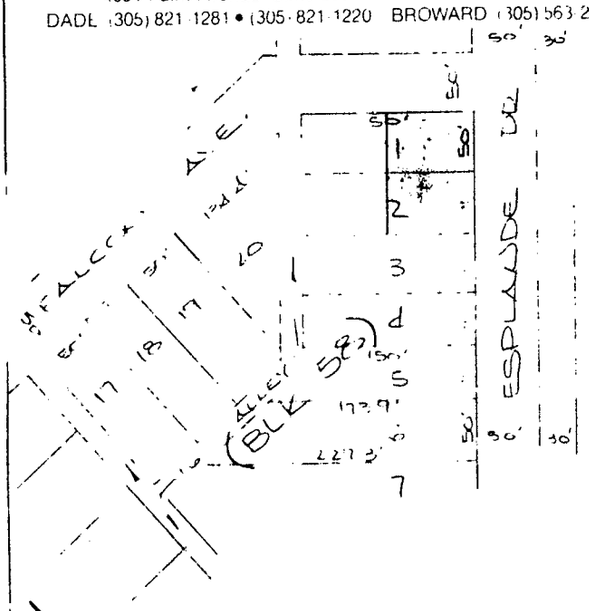

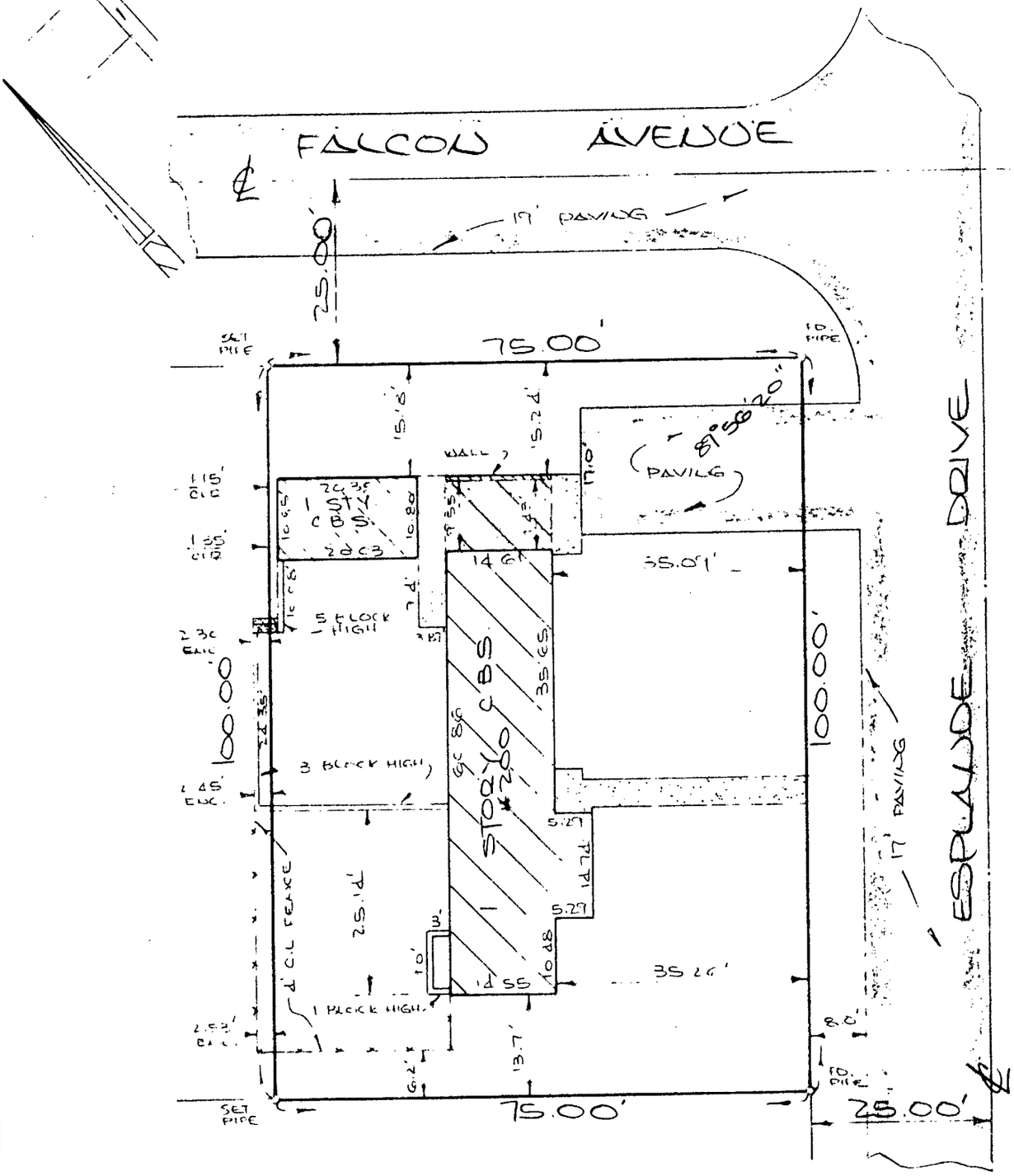

The Southeasterly ½ of Lots 1 & 2, Block 58 of CINEMA PARK ADDITION TO COUNTRY CLUB ESTATES according to the Plat thereof as recorded in Plat Book 17 at Page 2 of the Public Records of Dade County, Florida

FOR: Thomas W. Jackson

DATE: August 31, 1983

SCALE 1" = 20' ORDER No 27237 F.B. A152-49 REV.

REV.

J.H. MANUCY, INC.

PROFESSIONAL LAND SURVEYORS

4694 Palm Avenue, Suite 203 • Hialeah, Florida 33012
DADE (305) 821-1281 • (305) 821-1220 BROWARD: (305) 563-2066

I HEREBY CERTIFY THAT THIS PLAT OF SURVEY WAS PREPARED UNDER MY DIRECTION, THAT IT MEETS THE MINIMUM TECHNICAL STANDARDS FOR LAND SURVEYING IN THE STATE OF FLORIDA (CHAPTER: 21HH-6 FLORIDA ADMINISTRATIVE CODE) FOR THE TYPE OF SURVEY SHOWN HEREON AND IS TRUE AND CORRECT TO THE BEST OF MY KNOWLEDGE AND BELIEF.

J.H. Manucy, Professional Land Surveyor #1128
John F. Pulice, Professional Land Surveyor #2691

State of Florida Date: September 1, 1983

STATE OF FLORIDA JOHN F. PULICE CERTIFICATE No. 2691

BOUNDARY SURVEY

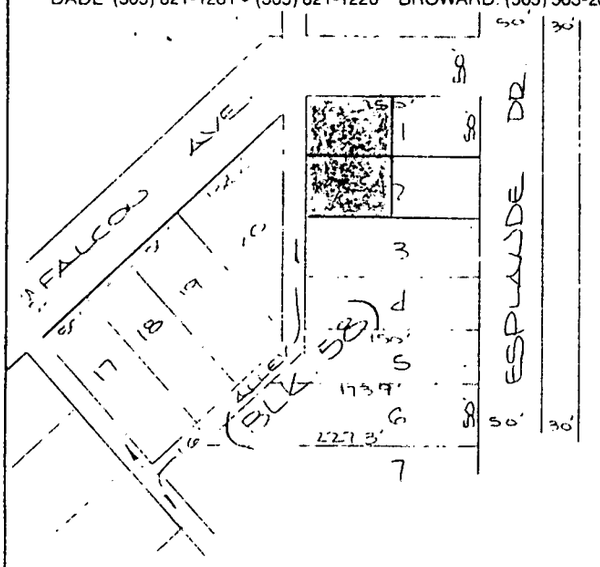

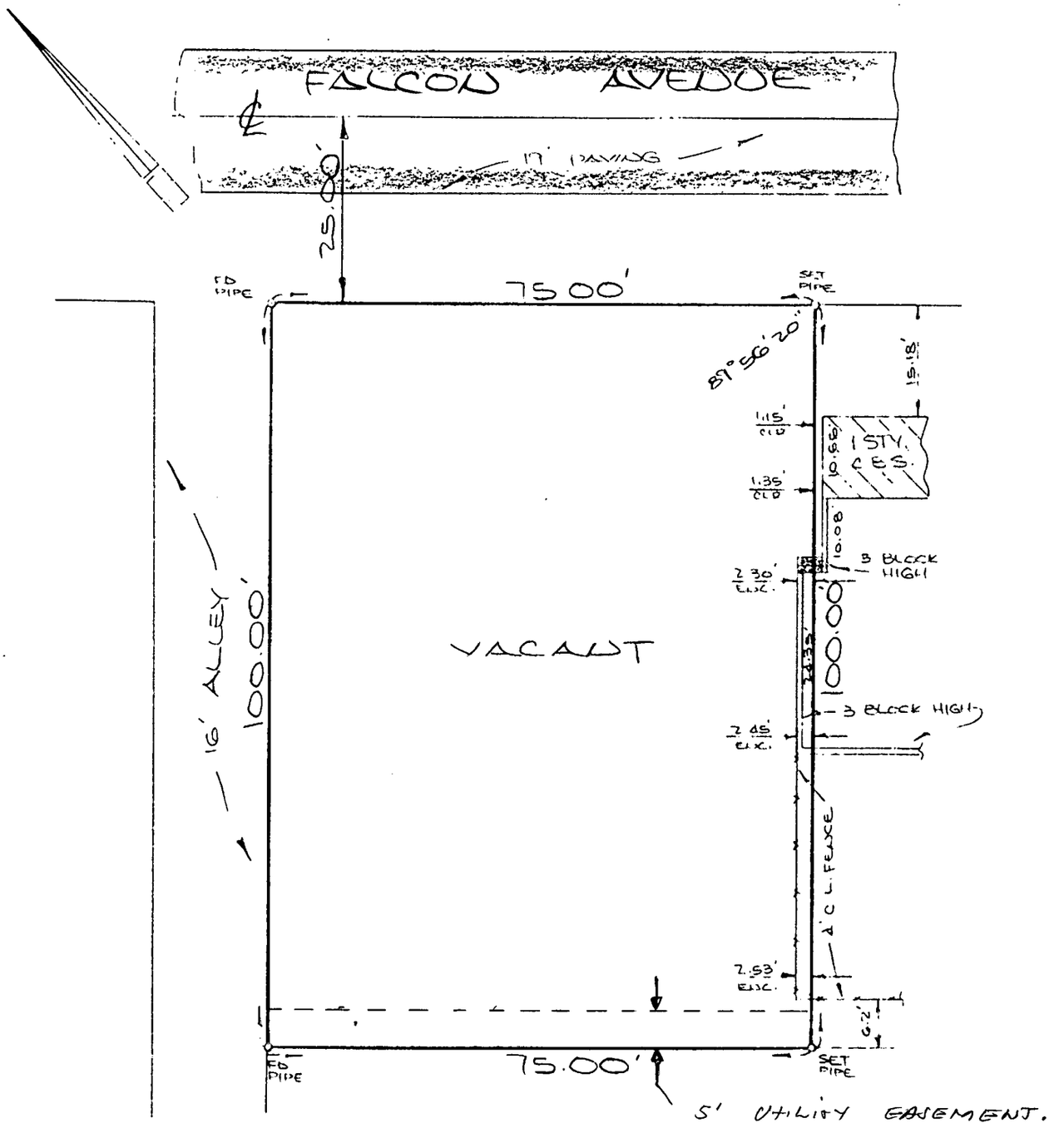

The Northwesterly ½ of Lots 1 & 2, Block 58 of CINEMA PARK ADDITION TO COUNTRY CLUB ESTATES according to the Plat thereof as recorded in Plat Book 17 at Page 2 of the Public Records of Dade County, Florida.

FOR Thomas W. Jackson DATE: August 31, 1983

SCALE: 1" = 20' ORDER No. 27237 F.B. A152-49 REV.

REV.

J.H. MANUCY, INC.

PROFESSIONAL LAND SURVEYORS

4694 Palm Avenue, Suite 203 • Hialeah, Florida 33012
DADE: (305) 821-1281 • (305) 821-1220 BROWARD: (305) 563-2066

I HEREBY CERTIFY THAT THIS PLAT OF SURVEY WAS PREPARED UNDER MY DIRECTION; THAT IT MEETS THE MINIMUM TECHNICAL STANDARDS FOR LAND SURVEYING IN THE STATE OF FLORIDA (CHAPTER 21HH-6 FLORIDA ADMINISTRATIVE CODE) FOR THE TYPE OF SURVEY SHOWN HEREON AND IS TRUE AND CORRECT TO THE BEST OF MY KNOWLEDGE AND BELIEF.

J.H. Manucy, Professional Land Surveyor #2128
John P. Pulice, Professional Land Surveyor #2691

State of Florida

September 1, 1983

BOUNDARY SURVEY

DYNAMIC CABLEVISION OF FL.

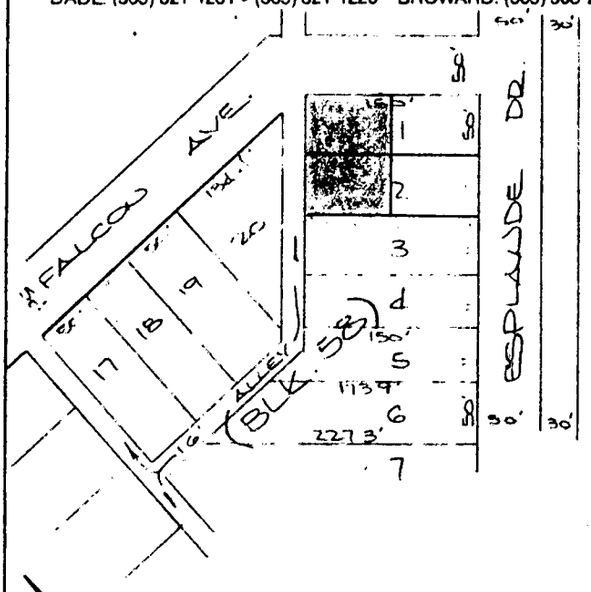

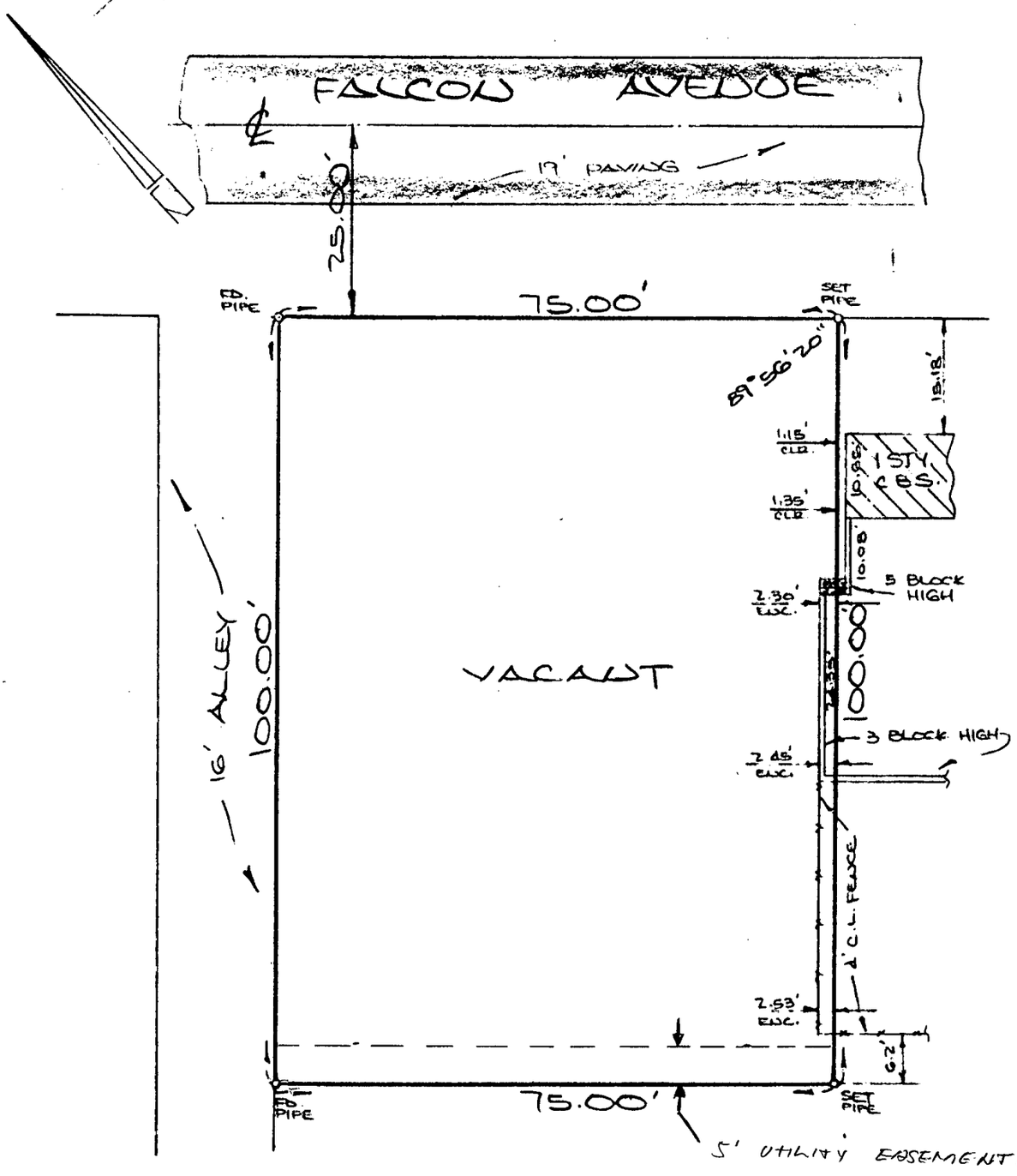

The Northwesterly ½ of Lots 1 & 2, Block 58 of CINEMA PARK ADDITION TO COUNTRY CLUB ESTATES according to the Plat thereof as recorded in Plat Book 17 at Page 2 of the Public Records of Dade County, Florida.

FOR: Thomas W. Jackson

DATE: August 31, 1983

SCALE: 1" = 25' ORDER No. 27237 F.B. A152-49 REV.

REV.

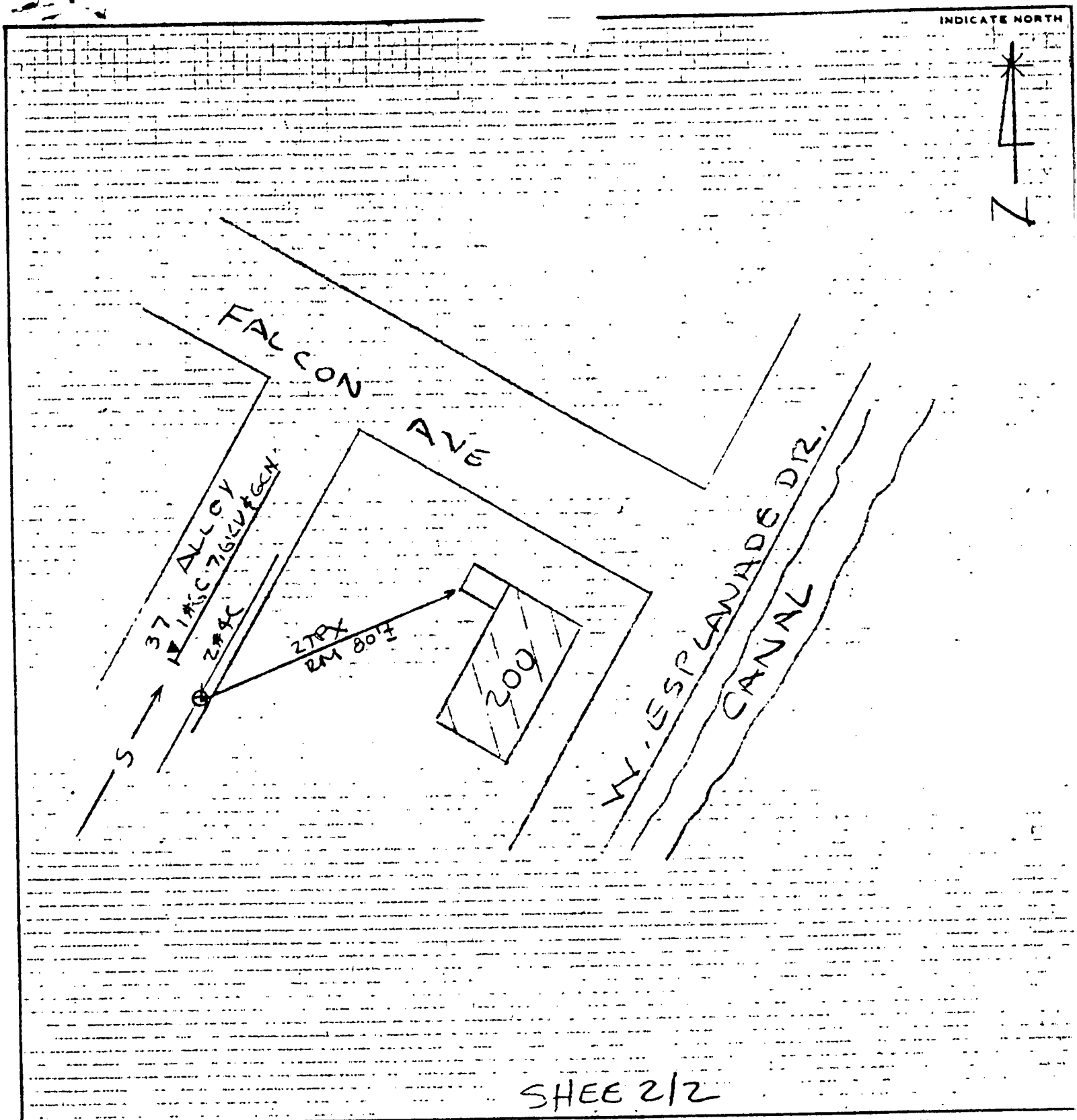

SHEE 2/2

Easement Req'd. Yes ■ No ☐		Survey/Stakes Req'd. Yes ■ No ☐			
Tree Work Req'd. Yes ☐ No ■		Permission Req'd. Yes ☐ No ■			
PERMIT REQ'D.	City	County Rd.	County Air	State Rd.	FAA
	FDC	RR Xing	Dr. Dist.	Transm.	
Request Tel. Co. Set Poles Yes ☐ No ■			Tel. Attachment Per NO		
Request Tel. Co. Transfer Yes ☐ No ■					
Request CATV Transfer Yes ☐ No ■					
POLE LINE FEET 0		TRENCH FT.			
POLE LINE FT. ON TRANSM. POLES		DUCT BANK FT.			
CABLE FEET	BURIED	600V	15KV	KV	NEUTRAL CABLE FEET
	SUBMARINE	KV	15KV	KV	
	OTHER	600V	15KV	KV	
Map Posting Req'd. Yes ☐ No ■ Posted by					

FLORIDA POWER & LIGHT COMPANY

PROVIDE UG 120/240V 1Ø TO NEW RESIDENCE

200 W. ESPLANADE DR.

Engineer JOSE A GARCIA	Date 7-24-84
JAG (DRAWN BY) / [signature] (CHECKED BY)	Dwg. No. JOB SKETCH
Rural Location Sec. _____ TWP. _____ S, R. _____	
Scale: NTS	St. Lt. Map No.	Pri. Map No. F-090
RWO/~~GIO/TWO~~ No. 8656	ER No. 7	930 LOC'N CODE

DAVE WELLS
FLA P&L Co

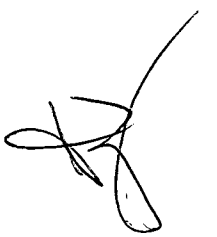

J.H. MANUCY, INC.

PROFESSIONAL LAND SURVEYORS

4694 Palm Avenue, Suite 203 • Hialeah, Florida 33012
DADE: (305) 821-1281 • (305) 821-1220 BROWARD: (305) 563-2066

I HEREBY CERTIFY THAT THIS PLAT OF SURVEY WAS PREPARED UNDER MY DIRECTION; THAT IT MEETS THE MINIMUM TECHNICAL STANDARDS FOR LAND SURVEYING IN THE STATE OF FLORIDA (CHAPTER: 21HH-6 FLORIDA ADMINISTRATIVE CODE) FOR THE TYPE OF SURVEY SHOWN HEREON AND IS TRUE AND CORRECT TO THE BEST OF MY KNOWLEDGE AND BELIEF.

J.H. Manucy, Professional Land Surveyor #1128
John A. Pulice, Professional Land Surveyor #2691

State of Florida Date September 1, 1983

BOUNDARY SURVEY

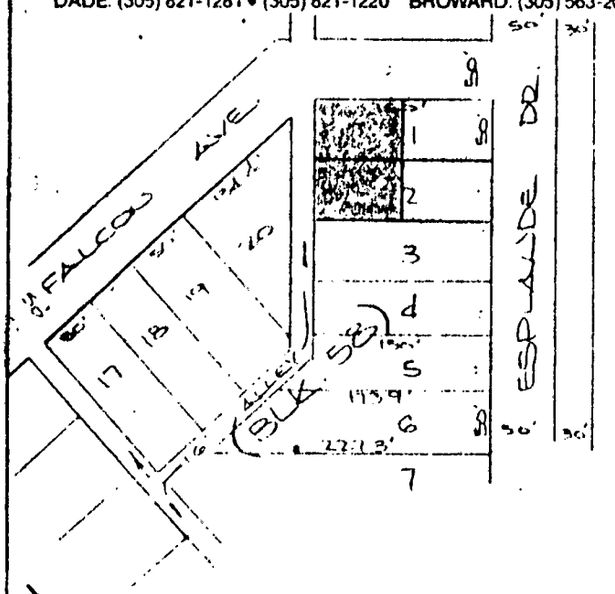

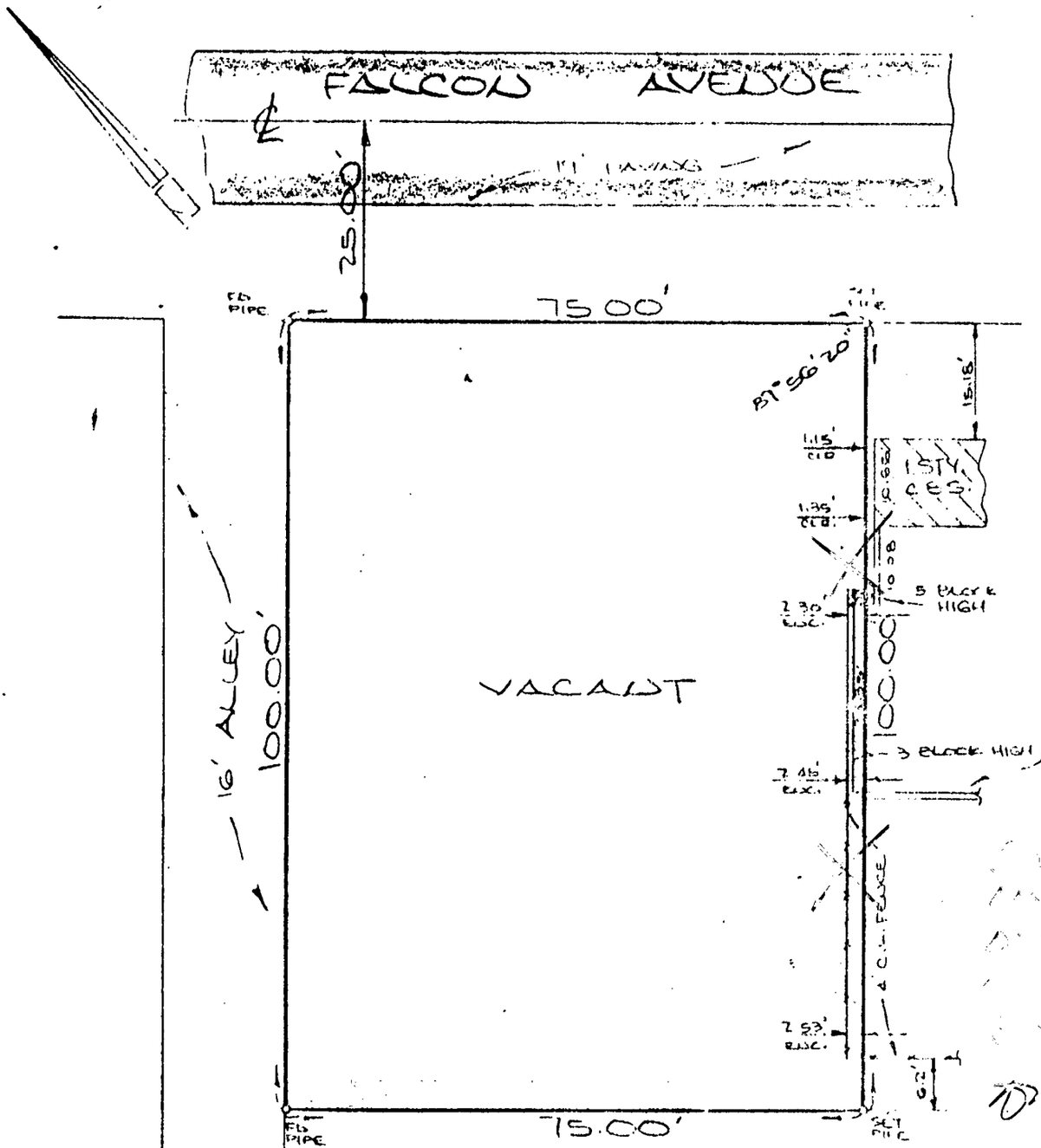

The Northwesterly ½ of Lots 1 & 2, Block 58 of CINEMA PARK ADDITION TO COUNTRY CLUB ESTATES
as recorded in Plat Book 17 at Page 2 according to the Plat thereof of the Public Records of Dade County, Florida.

FOR: Thomas W. Jackson DATE: August 31, 1983

SCALE: 1" = 20' ORDER No. 27237 F.B. A152-49 REV.

REV.

LOCATIONS AND ELEVATIONS OF OTHER UTILITIES WERE OBTAINED FROM THE BEST INFORMATION AVAILABLE BUT MAY NOT BE EXACTLY AS SHOWN. DIG WITH CAUTION

TLM DATA

LOC'N.	TX/LAT LOC. NO.
1	8-6658-8641-0-9

NAME OF GAS CO. CITY GAS CO.
SERIAL No. 84-10163
DATE OF REQUEST 7-24-84
PHONE 691-8710 ext. 147
GAS IN VICINITY. YES XX NO
NAME OF GAS REP. RONDA LAMB

48 HOURS PRIOR TO STARTING CONSTRUCTION, CONTACT THE FOLLOWING UTILITIES TO MARK FIELD LOCATIONS OF BURIED FACILITIES.

CITY GAS CO.	691-8710 x 147
SBT&T	264-6820
MIAMI SPGS WATER	885-6104

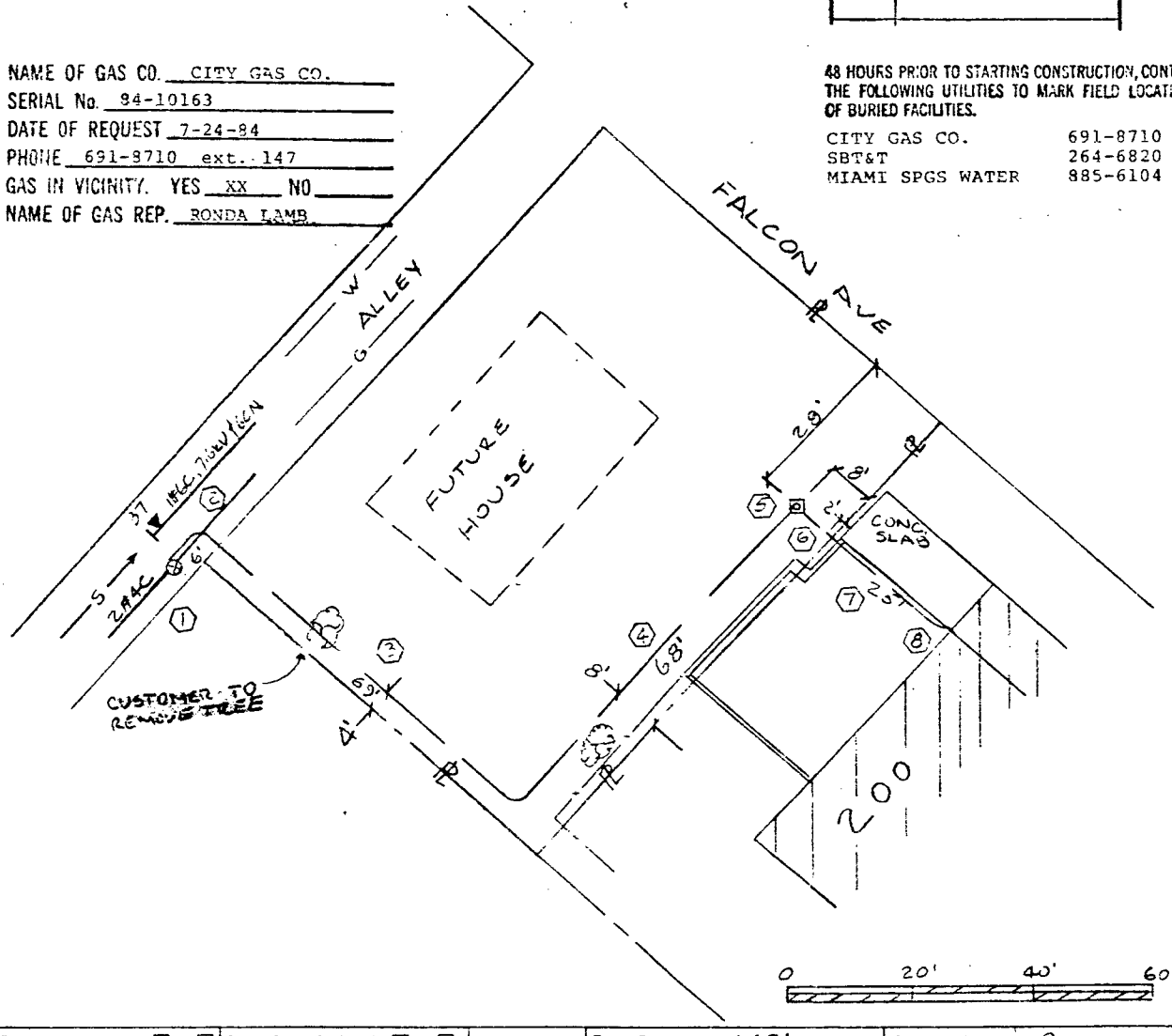

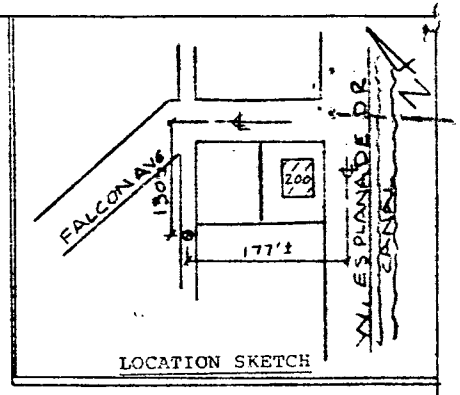

NOTES

1.- Frame pole @ loc'n 1 similar to UH-5 EDS, install 2" RSR. on W side of pole.
2.- At loc'n 2,3&4 pull 4/0 A. TPX, 600 v thru 2" PVC, 36" min. cover.
3.- At loc'n 5 install 20" round H.H.
4.- At loc'n 6 install 2" PVC connecting to customer's from loc'n 7, 24" min. cover.
5.- At loc'n 6,7&8 pull 1/0 A. TPX 600v thru 2" PVC.
6.- At loc'n 7 customer to install PVC.

EASEMENT STAKES AS BUILT REQ'D

SHEET 1/2

Easement Req'd. Yes ■ No □	Survey Stakes Req'd. Yes ■ No □	Telephone Request Yes □ No ■	Trench Feet + 143'	Duct Bank Feet 0
Tree Work Required Yes □ No ■	Permission Required Yes □ No ■			
Map Posting Req'd. Yes □ No ■	Posted by			
Permit Required: NONE				

Cable Feet					Neutral Cable Feet
Buried	600V	15KV	KV		
Submarine	KV	15KV	KV		
Other	600V	15KV	KV		

FLORIDA POWER & LIGHT COMPANY

PROVIDE 120/240 V 1 Ø TO NEW RESIDENCE
200 N. ESPLANADE DR.

ENGINEER JOSE A. GARCIA	DATE 7-24-84
SCALE: Hor. AS SHOWN Vert. AS SHOWN	DWG. NO. 200 ESPLANADE DR
	UG MAP NO. F-090
RWO ■ No. 8656 ER No. 7	Loc'n Code 830

FORM 1451E REV. 5/71

DRAWN BY JAG
CHECKED BY
CORRECT

NO.	DATE	REVISION	BY	CH.	COR.	APP.

U. G.

5' EASEMENT

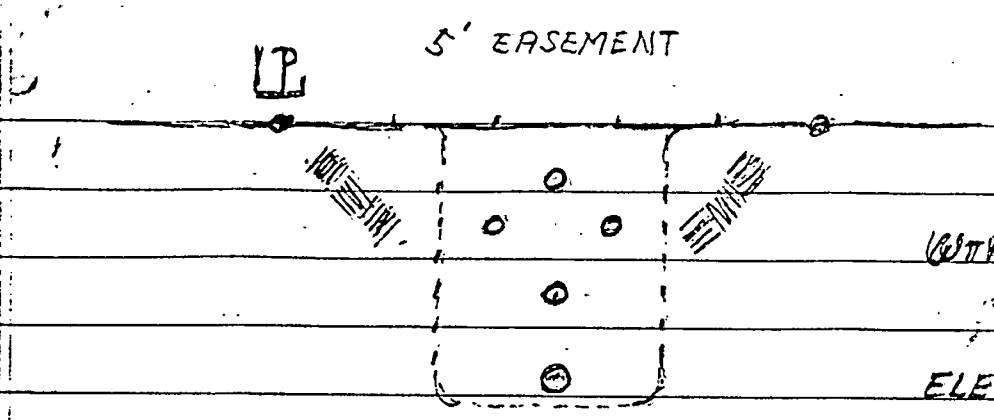

T.V.
WTR GAS
TEL.
ELECTRIC

2' TRENCH 3.5' DEEP

RESIDENTIAL: - SERVING AN INSIDE LOT.
REAR OF LOT ABUTTING ALLEY
5' MINIMUM WIDTH. RECORDED
ON DEED RUNNING WITH LAND
IN PERPETUITY.

1. OWNER NO. 1. _____
2. OWNER NO. 2. _____
3. ELECTRIC UTILITY (FRANCHISED)
4. TELEPHONE " "
5. WATER " "
6. GAS " "
7. T.V. CABLE " "

COPY OF PLANNED EASEMENT DELIVERED I.Z. FOR JACK CON. 7/13/84 [illegible]

BUILDING AND ZONING PROHIBITION OF ALL ABOVE GROUND CONSTRUCTION: BOTH ENDS OF EASEMENT, IF FENCED MUST BE GATED. (CONDUIT REQUIRED)

J.H. MANUCY, INC.

PROFESSIONAL LAND SURVEYORS

4694 Palm Avenue, Suite 203 • Hialeah, Florida 33012
DADE (305) 821-1281 • (305) 821-1220 BROWARD (305) 563-2066

I HEREBY CERTIFY THAT THIS PLAT OF SURVEY WAS PREPARED UNDER MY DIRECTION; THAT IT MEETS THE MINIMUM TECHNICAL STANDARDS FOR LAND SURVEYING IN THE STATE OF FLORIDA (CHAPTER 21HH-6 FLORIDA ADMINISTRATIVE CODE) FOR THE TYPE OF SURVEY SHOWN HEREON AND IS TRUE AND CORRECT TO THE BEST OF MY KNOWLEDGE AND BELIEF.

J.H. Manucy, Professional Land Surveyor #1128
John F. Pulice, Professional Land Surveyor #2691

State of Florida Date: September 1, 1983

BOUNDARY SURVEY

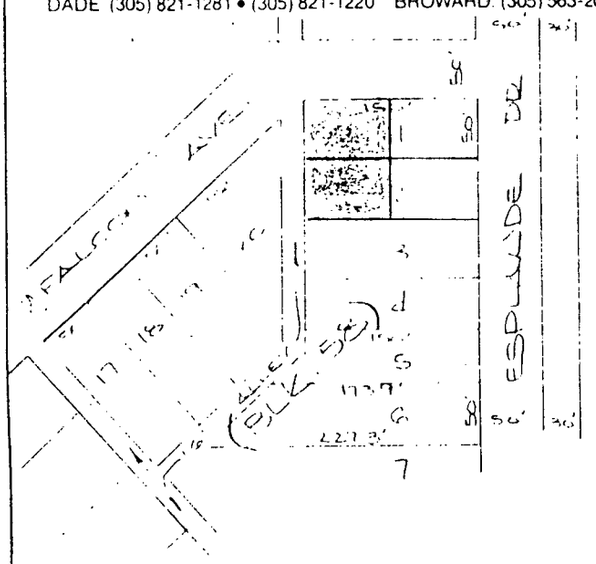

5' EASEMENT FOR U.G. UTILITES.

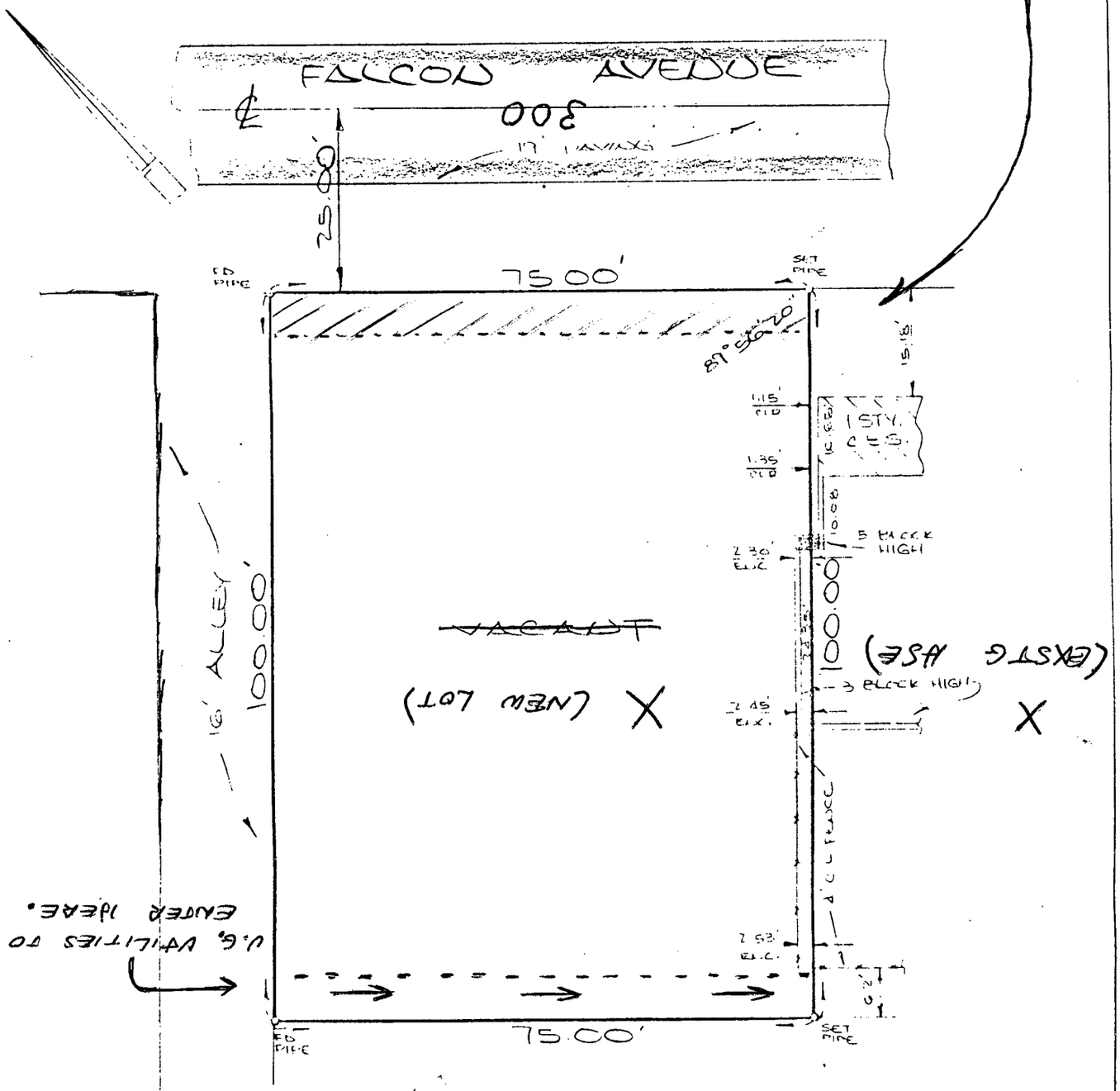

The Northwesterly ½ of Lots 1 & 2, Block 58 of CINEMA PARK ADDITION TO COUNTRY CLUB ESTATES according to the Plat thereof as recorded in Plat Book 17 at Page 2 of the Public Records of Dade County, Florida

FOR Thomas W. Jackson, DATE: August 31, 1983

SCALE: 1" = 20' ORDER No. 27237 F.B. A152-49 REV.

REV.

J.H. MANUCY, INC.

PROFESSIONAL LAND SURVEYORS

4694 Palm Avenue, Suite 203 • Hialeah, Florida 33012
DADE (305) 821-1281 • (305) 821-1220 BROWARD (305) 563-2066

I HEREBY CERTIFY THAT THIS PLAT OF SURVEY WAS PREPARED UNDER MY DIRECTION THAT IT MEETS THE MINIMUM TECHNICAL STANDARDS FOR LAND SURVEYING IN THE STATE OF FLORIDA (CHAPTER 21HH-6 FLORIDA ADMINISTRATIVE CODE) FOR THE TYPE OF SURVEY SHOWN HEREON AND IS TRUE AND CORRECT TO THE BEST OF MY KNOWLEDGE AND BELIEF

J.H. Manucy, Professional Land Surveyor #1128
John F. Pulice, Professional Land Surveyor #2691

State of Florida Date September 1, 1983

BOUNDARY SURVEY

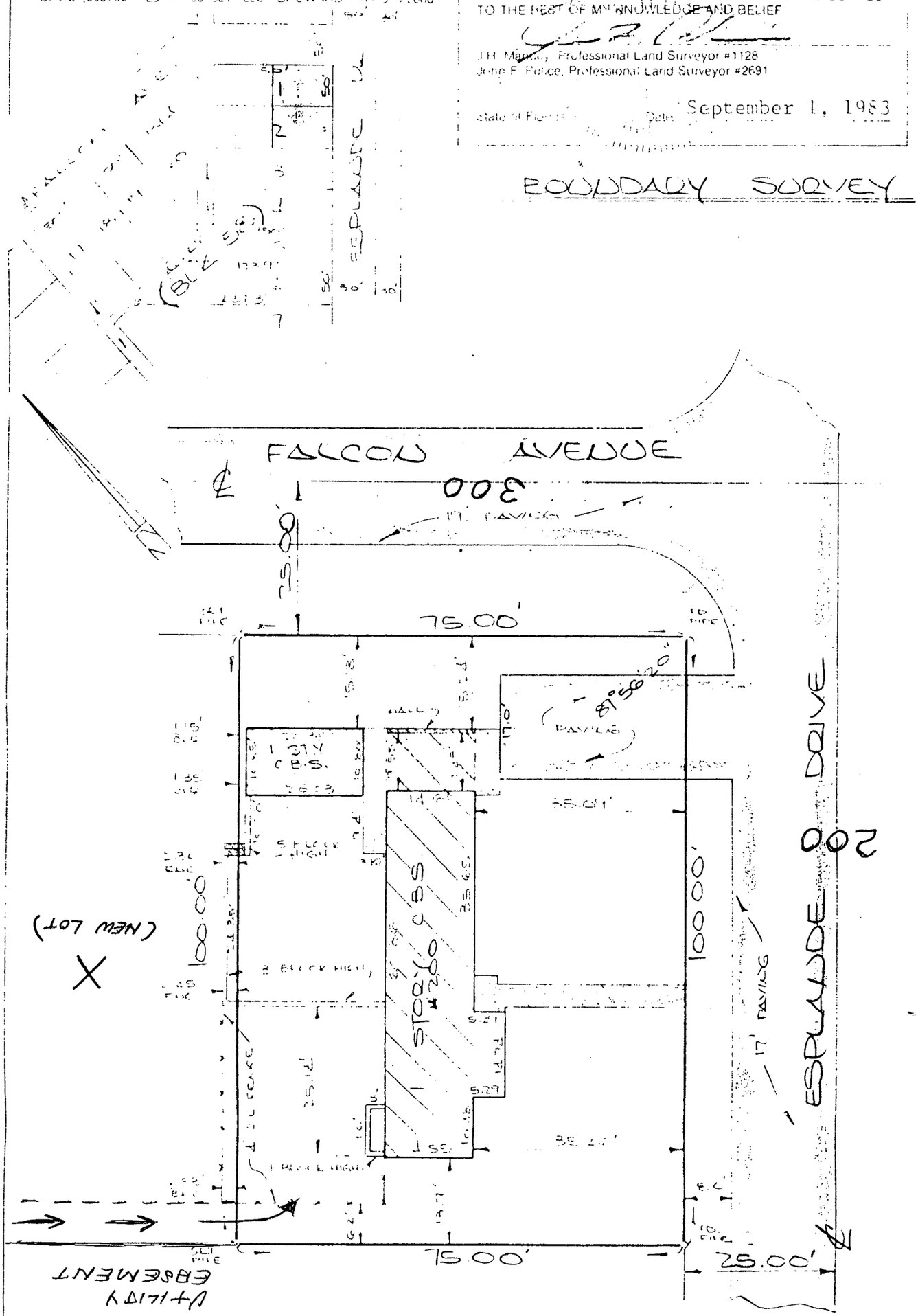

The Southeasterly ½ of Lots 1 & 2, Block 58 of CINEMA PARK ADDITION TO COUNTRY CLUB ESTATES according to the Plat thereof as recorded in Plat Book 17 at Page 2 of the Public Records of Dade County, Florida.

FOR Thomas W. Jackson DATE August 31, 1983

SCALE 1" = 20' ORDER No 27237 F.B. A152-49 REV.

REV.

C I T Y O F M I A M I S P R I N G S

201 Westward Drive
Miami Springs, Florida 33166
(305) 805-5030

M I S C E L L A N E O U S P E R M I T

Application Number . . . . . 03-00001016 Date 6/02/03
Property Address . . . . . 200 ESPLANADE DRIVE
FOLIO NUMBER 05-3118-016-1590
Old Customer Account No. . . 1061310057
Application description . . . WINDOW/DOORS ETC
Property Zoning . . . . . UPDATE
Application valuation 300

Owner	Contractor
DIAZ, ALAN & MARTHA	OWNER
200 ESPLANADE DRIVE	
MIAMI SPRINGS FL 33166	

------ Structure Information REPLACE FRONT DOOR -----

Construction Type . . . . . ALUMINUM
Other struct info . . . . . MASTER ? YES
SUBSIDIARY ? NO
RESIDENTIAL ? YES
COMMERCIAL ? NO

Permit . . . . . MISCELLANEOUS
Additional desc . .
Permit Fee . . . . 50.00 Plan Check Fee . . .00
Issue Date . . . . 6/02/03 Valuation 300
Expiration Date . . 11/29/03

Qty	Unit Charge	Per		Extension
			BASE FEE	46.50
1.00	3.5000	EA	BLD DOORS/GARAGE DOORS	3.50

Other Fees . . . . . CODE COMPLIANCE FEE .60

Fee summary	Charged	Paid	Credited	Due
Permit Fee Total	50.00	50.00	.00	.00
Plan Check Total	.00	.00	.00	.00
Other Fee Total	.60	.60	.00	.00
Grand Total	50.60	50.60	.00	.00

All inspection requests must be scheduled 24 hours prior to inspections. Please call (305) 805-5030 between 8:00 AM and 4:00 PM for scheduling. No inspection requests will be accepted after 4:00 PM.

PREPARED 6/02/03, 11:29:41 PAYMENTS DUE RECEIPT
CITY OF MIAMI SPRINGS - BP PROGRAM BP820L

APPLICATION NUMBER: 03-00001016 200 ESPLANADE DRIVE

FEE DESCRIPTION	AMOUNT DUE
CODE COMPLIANCE FEE	.60
MISCELLANEOUS - RESIDENTIAL	50.00
TOTAL DUE	50.60

Please present this receipt to the cashier with full payment.

CITY OF MIAMI SPRINGS PERMIT APPLICATION

DATE: May 30, 2003 PERMIT: 03-1016

SQUARE FOOTAGE: _____ ESTIMATED COST: 300.00

Type of Permit: (✓) Building ( ) Plumbing ( ) Electrical ( ) Mechanical ( ) Roofing ( ) Sign ( ) Misc

Owner's Name ALAN DIAZ Phone 305 888 4219
Owner's Address 200 N. ESPLANADE DR
City MIAMI SPRINGS State FL Zip 33166

Fee Simple Titleholder's Name (if other than owner) _____
Fee Simple Titleholder's Address (if other than owner's) _____
City _____ State _____ Zip _____

Contractor's Name _____ Phone _____
Contractor's Address _____
City _____ State _____ Zip _____
Contractor's License No. (County) _____

Job Address 200 N. ESPLANADE DR.
City MIAMI SPRINGS
Legal Description (incl Folio #) _____

Bonding Company _____
Bonding Company Address _____
City _____ State _____ Zip _____

Architect/Engineer's Name _____ Phone _____
Architect Company Address _____
City _____ State _____ Zip _____

Mortgage Lender's Name _____
Mortgage Lender's Address _____
City _____ State _____ Zip _____

BUILDING DEPARTMENT RECEIVED 03 MAY 30 PM 12:22 CITY OF MIAMI SPRINGS

WORK DESCRIPTION: REPLACE NEW FRONT DOOR. (1) EXTERIOR

Application is hereby made to obtain a permit to do the work and installations as indicated. I certify that no work or installation has commenced prior to the issuance of a permit and that all work will be performed to meet the standards of all laws regulating construction in this jurisdiction. I understand that a separate permit must be secured of ELECTRICAL WORK PLUMBING, SIGNS, WELLS, POOLS, FURNACES, BOILERS, HEATERS, TANKS, and AIR CONDITIONING, ETC.

Owner's Affidavit: I certify that all the foregoing information is accurate and that work will be done in compliance with all applicable laws regulating construction and zoning.

WARNING TO OWNER: YOUR FAILURE TO RECORD A NOTICE OF COMMENCEMENT MAY RESULT IN YOUR PAYING TWICE FOR IMPROVEMENTS TO YOUR PROPERTY. IF YOU INTEND TO OBTAIN FINANCING, CONSULT WITH YOUR LENDER OR AN ATTORNEY BEFORE RECORDING YOUR NOTICE OF COMMENCEMENT.

Signature _____ (Owner)
Sworn to and subscribed before me by
ALAN DIAZ
who is personally known to me or produced
FEDERAL RES. ID.
as identification, this 30 day of MAY
20 03.
Notary's Signature _____
Printed Name of Notary MARIA TEDESCO

Signature _____ (Contractor)
Sworn to and Subscribed before me by
_____
who is personally known to me or produced
_____
as identification, this _____ day of _____
20 _____.
Notary's Signature _____
Printed Name of Notary _____

APPROVAL: Building 6/2/03 Structual _____ Electrical _____ Plumbing _____ Mechanical _____
2 - copies product approval

PLUMBING

BATH TUB
BIDET
DISHWASHER
BACK FLOW PREVENTOR
FLOOR DRAIN
GREASE TRAP
INTERCEPTOR
LAVATORY
CLOTHES WASHER
SHOWER
SINK, POT/3 COMP
SINK, RESIDENCE
SINK, SLOP
TEMP WATER CLOSET
URINAL
WATER CLOSET
INDIRECT WASTES
WATER SUPPLY TO:
AIR COND UNIT
FIRE SPRINKLER
HEATER - NEW
HEATER - REPLACE
LAWN SPRINKLER
SWIMMING POOL
WATER SERVICE
SEWER CONNECTION
UTILITY - SEWER
UTILITY - WATER
SOAKAGE PIT (CF)
CATCH BASIN
DISCHARGE WELL
SPRINKLER WELL
AREA DRAIN
ROOF INLET
SOLAR WTR HTR
FIRE STANDPIPE
POOL PIPING
LAWN SPRINKLER
GAS RANGE
GAS METER SET
GAS PIPING OUTLET
REPAIR
OTHER

ELECTRICAL

AIR COND (CENTRAL)
BURGLAR ALARM
ALARM (DEVICES)
CLOTHES DRYER
DISHWASHER
FANS (PERMANENT)
FIRE ALARM
INTERCOM
LAMPS/FIXTURES
MOTORS (LIST BELOW)
METER RE-CONNECT
OUTLETS
RANGE
REFRIGERATOR
REPAIRS (LIST BELOW)
ROUGH OUTLETS
SERVICE CAPACITY
SIGN (TYPE)
SMOKE DETECTORS
SPECIAL PURPOSE OUTLET
STRIP HEATER (KW)
SUB FEEDS
SWIMMING POOL
TEMP FOR TEST
TEMP SERVICE
TRASH COMPACTOR
WATER HEATER
OTHER

BUILDING

AWNINGS
DOORS
GATES
SHUTTERS
WINDOWS
ADDITIONS (SF)
SWIM POOL (SF)
RETAIN WALL (LF)
SCREEN ENCL (SF)
WOOD DECK (SF)
AC SCREENS (LF)
IRON GRILLES (SF)
DEMO (SF)
PAVING (SF)
CANOPIES (SF)
FENCE (CH LINK) (LF)
FENCE (WOOD) (LF)
FENCE (IRON) (LF)
REMODEL (SF)
OTHER

MECHANICAL

CENTRAL A/C SYSTEM
DUCT WORK (DROPS)
AIR OR REFRIG COMPRESSOR
0 - 5 TON
5 - 10 TON
10 - 25 TON
OVER 25 TON
CONDENSATE LINE
AIR COMP. OUTLETS
STRIP HEATER (KW)
VENTILATORS
BOILERS
STEAM OPENINGS
ELEVATORS
OF LANDINGS
WALL TYPE HEATER
SOLAR HEATER
VACUUM SYSTEM
DRAINAGE PIT
TYPE OF DUCT WORK
OTHER

ROOFING

NEW ROOF
RE-ROOF
REPAIR
ZONING TYPE:
COMMERCIAL
RESIDENTIAL
ROOF MATERIAL & QUANTITY
BUILT UP # OF SQ:
SHINGLE # OF SQ:
TILE # OF SQ:
MATERIAL TYPE:
BUILT UP TYPE
SHINGLE TYPE
TILE TYPE
OTHER

SIGNS

NEW SIGN
CHANGE EXISTING
CHANGE OF FACE
DOUBLE FACE
POLE SIGN
WALL SIGN
SINGLE FACE
DIRECTIONAL
ADVERTISEMENT
CONSTRUCTION
OTHER

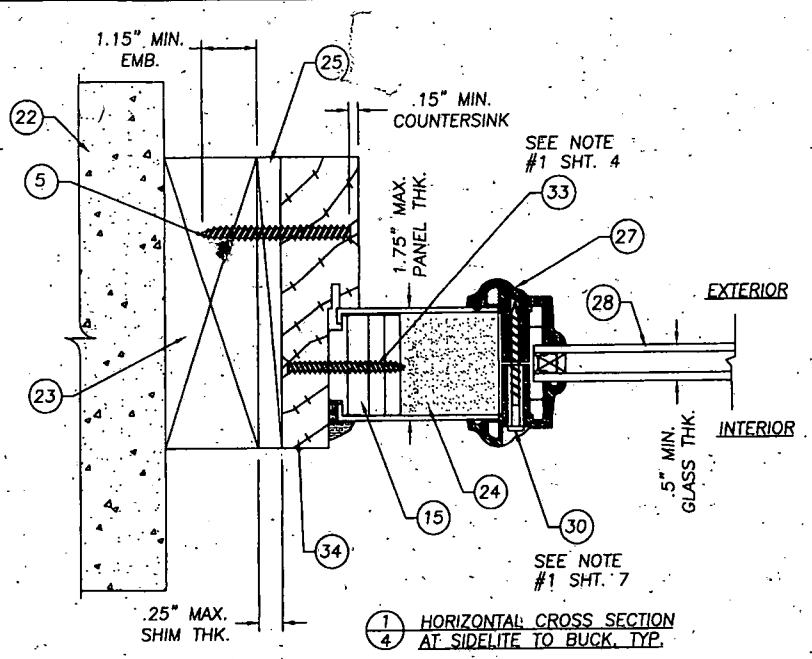

1/4 HORIZONTAL CROSS SECTION AT SIDELITE TO BUCK, TYP.

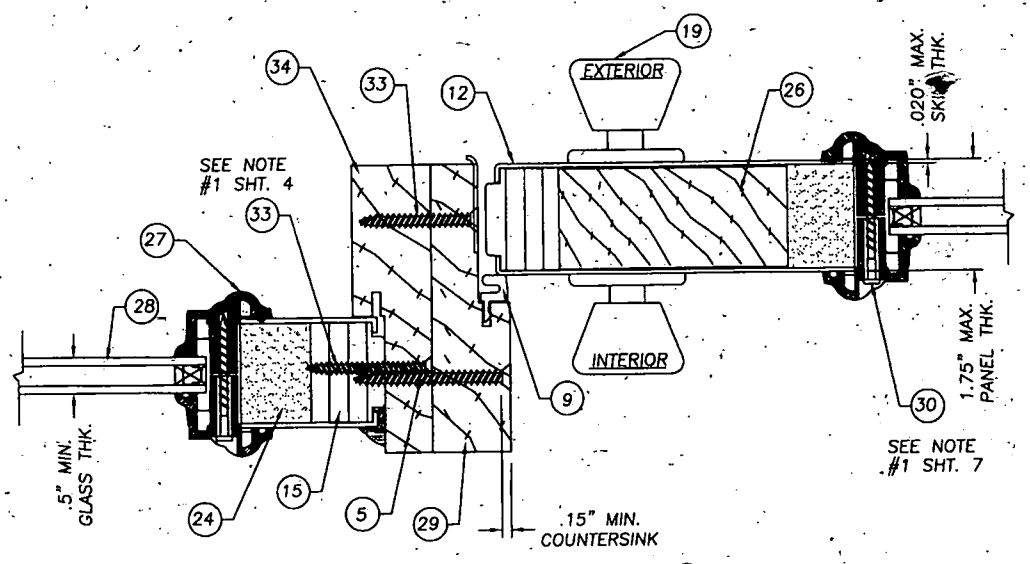

2/4 HORIZONTAL CROSS SECTION AT SIDELITE TO LATCH JAMB, TYP.

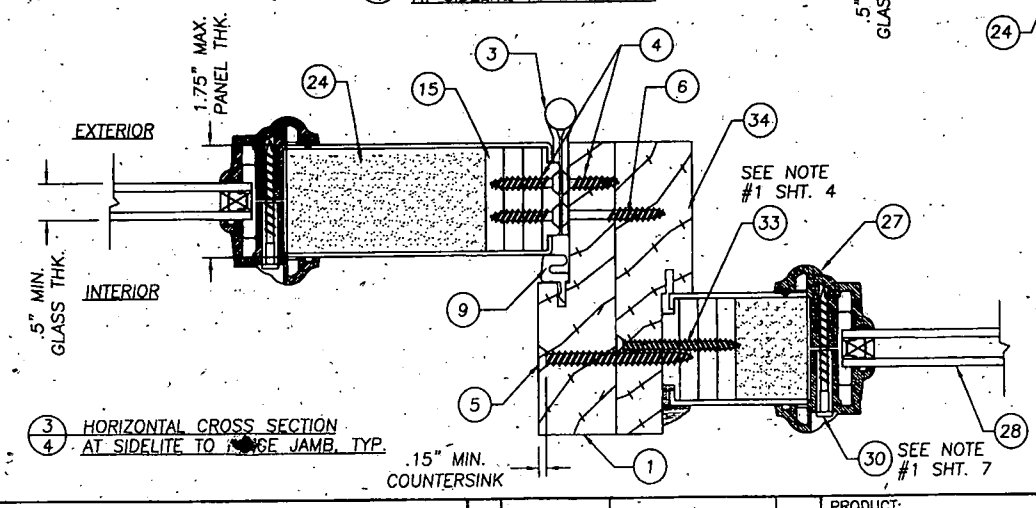

3/4 HORIZONTAL CROSS SECTION AT SIDELITE TO HINGE JAMB, TYP.

NOTES:
1. SPACING FOR ITEM #33, WHEN USED TO ATTACH THE SIDELITE TO THE SIDELITE JAMB IS AS FOLLOWS; FROM THE TOP DOWN 6" & 30". THE SPACING FROM THE BOTTOM UP IS THE SAME.

2	11/08/02	GENERAL REVISION	KMN
1	6/29/00	GENERAL REVISION	TJH
NO.	DATE	REVISIONS	BY

JELD-WEN, INC.
31725 HIGHWAY 97 NORTH
CHILOQUIN, OR. 97624
PH. 541.783.2057

PRODUCT:
JELD-WEN STEEL OUTSWING WOODEDGE DOOR DOUBLE & SINGLE UNIT

PART OR ASSEMBLY:
HORIZONTAL CROSSECTIONS 1/4, 2/4 & 3/4

RW BUILDING CONSULTANTS, INC. 813.684.3831

PRODUCT REVISED as complying with the Florida Building Code
Acceptance No. 02-1211.10
Expiration Date 07/13/08
By _____
Miami Dade Product Control Division

DATE: 12/01/99
SCALE: 1/2" = 1"
DWG. BY: TJH
CHK. BY: RW
DRAWING NO.: S-2004
SHEET 4 OF 7

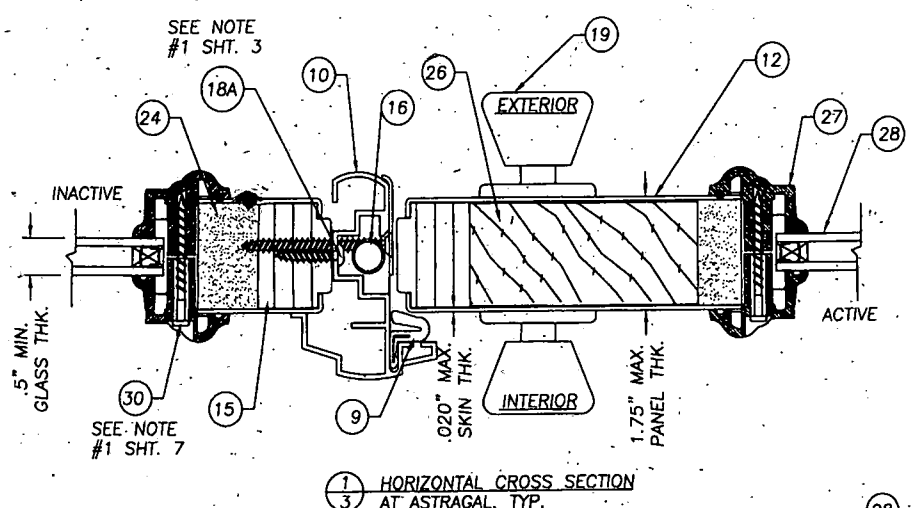

1/3 HORIZONTAL CROSS SECTION AT ASTRAGAL, TYP.

NOTES:
1. SPACING FOR #18A IS AS FOLLOWS: FROM TOP DOWN 1", 2 1/2", 4", 5 1/2", 13", 18" & 26". SPACING FROM THE BOTTOM UP IS THE SAME.
2. ATTACH THE STRIKE PLATE AND THE DEADBOLT PLATE TO THE ASTRAGAL USING A #8 x 2" LG. PHILLIPS FLATHEAD SCREW.

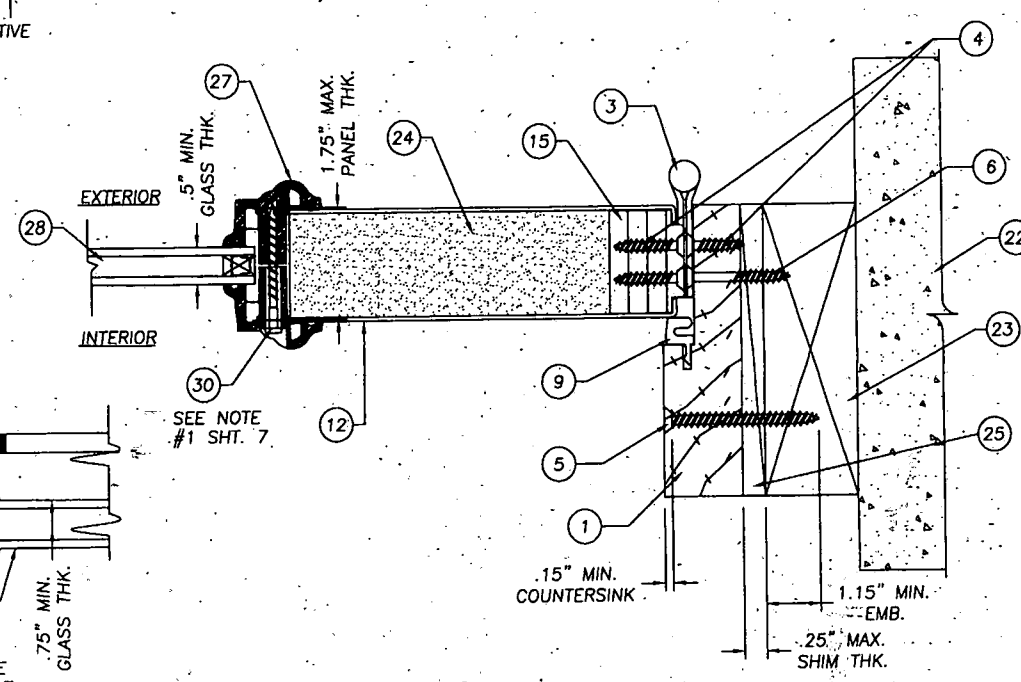

2/3 HORIZONTAL CROSS SECTION AT HINGE JAMB TO BUCK, TYP.

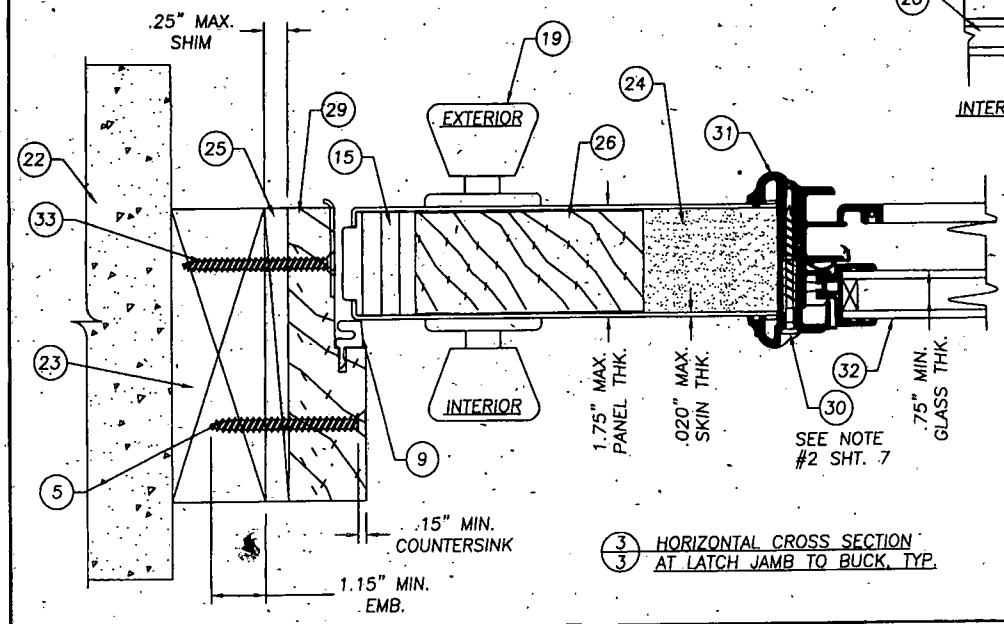

3/3 HORIZONTAL CROSS SECTION AT LATCH JAMB TO BUCK, TYP.

2	11/08/02	GENERAL REVISION	KMN
1	6/29/00	GENERAL REVISION	TJH
NO.	DATE	REVISIONS	BY

JELD-WEN, INC.
31725 HIGHWAY 97 NORTH
CHILOQUIN, OR. 97624
PH: 541.783.2057

PRODUCT:
JELD-WEN STEEL OUTSWING WOODEDGE DOOR DOUBLE & SINGLE UNIT

PART OR ASSEMBLY:
HORIZONTAL CROSSECTIONS 1/3, 2/3 & 3/3

RW BUILDING CONSULTANTS, INC. 813.684.3831

PRODUCT REVISED as complying with the Florida Building Code
Acceptance No. 02-1211.10
Expiration Date 07/13/08
By _____
Miami Dade Product Control Division

DATE: 12/01/99
SCALE: 1/2" = 1"
DWG. BY: TJH
CHK. BY: RW
DRAWING NO.: S-2004
SHEET 3 OF 7

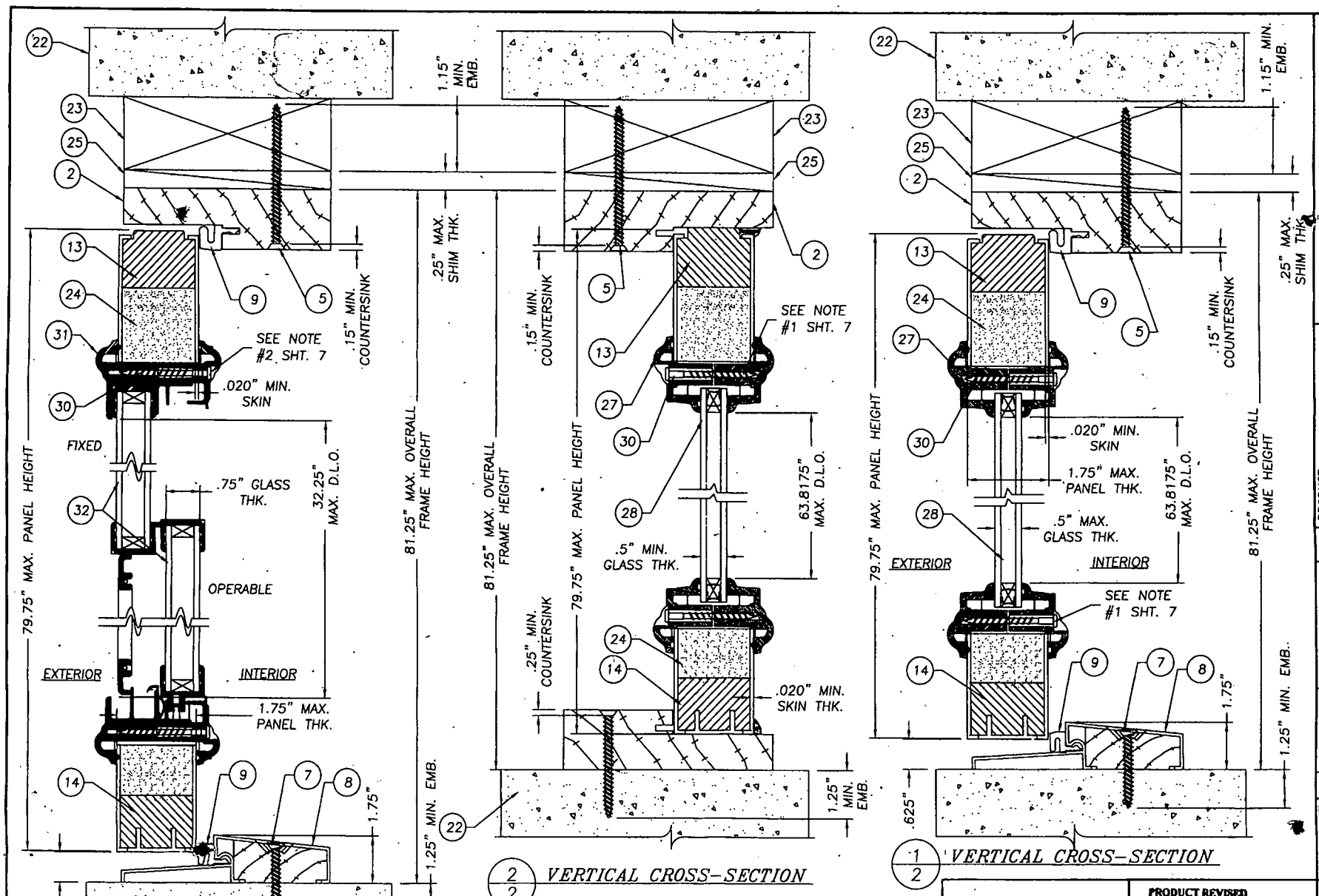

3/2 VERTICAL CROSS-SECTION

2/2 VERTICAL CROSS-SECTION

1/2 VERTICAL CROSS-SECTION

PRODUCT REVISED as complying with the Florida Building Code Acceptance No. 02-1211.10 Expiration Date 02/12/08 By Miami-Dade Product Control Division

JELD-WEN, INC.
31725 HIGHWAY 97 NORTH
CHILOQUIN, OR. 97624
PH. 541.783.2057

PRODUCT: JELD-WEN STEEL OUTSWING WOODEDGE DOOR DOUBLE AND SINGLE UNIT
PART OR ASSEMBLY:
VERTICAL CROSS SECTIONS

NO.	DATE	REVISIONS	BY
3	11/08/02	GENERAL REVISION	KMN
2	6/28/00	GENERAL REVISION	TJH
1	6/27/00	GENERAL REVISION	TJH

RW BUILDING CONSULTANTS, INC. 813.684.3831

DATE: 12/01/99
SCALE: 1/2" = 1"
DWG. BY: TJH
CHK. BY: RW
DRAWING NO.: S-2004
SHEET 2 OF 7

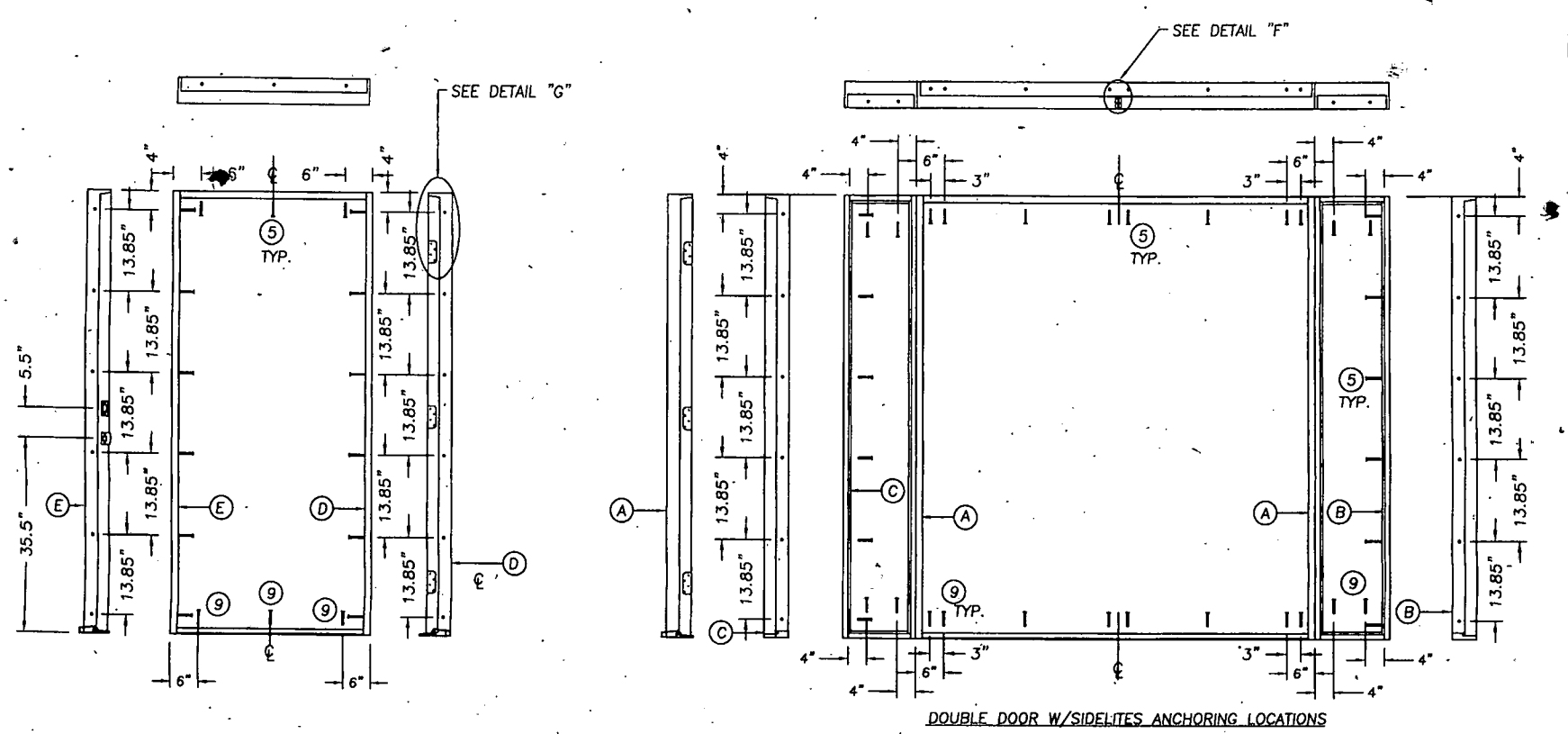

SINGLE DOOR ANCHORING LOCATIONS

DOUBLE DOOR W/SIDELITES ANCHORING LOCATIONS

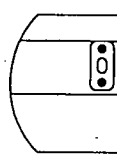

DETAIL "F"
ATTACH ASTRAGAL THROW BOLT STRIKE PLATE TO FRAME AS SHOWN.

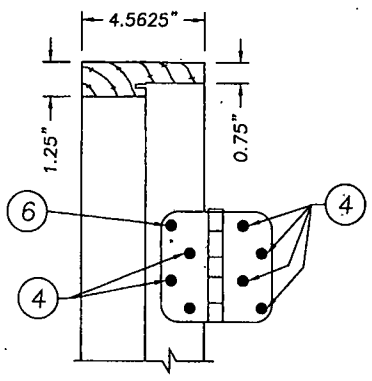

DETAIL "G"
HINGE DETAIL

PRODUCT REVISED as complying with the Florida Building Code Acceptance No. 02-1211.10 Expiration Date 02/12/08 By Miami-Dade Product Control Division

JELD-WEN, INC.
31725 HIGHWAY 97 NORTH
CHILOQUIN, OR. 97624
PH. 541.783.2057

PRODUCT: JELD-WEN STEEL OUTSWING WOODEDGE DOOR DOUBLE AND SINGLE UNIT
PART OR ASSEMBLY:
ANCHORING LOCATIONS

NO.	DATE	REVISIONS	BY
2	11/08/02	GENERAL REVISION	KMN
1	6/29/00	GENERAL REVISION	TJH

RW BUILDING CONSULTANTS, INC. 813.684.3831

DATE: 12/01/99
SCALE: N.T.S.
DWG. BY: TJH
CHK. BY: RW
DRAWING NO.: S-2004
SHEET 5 OF 7

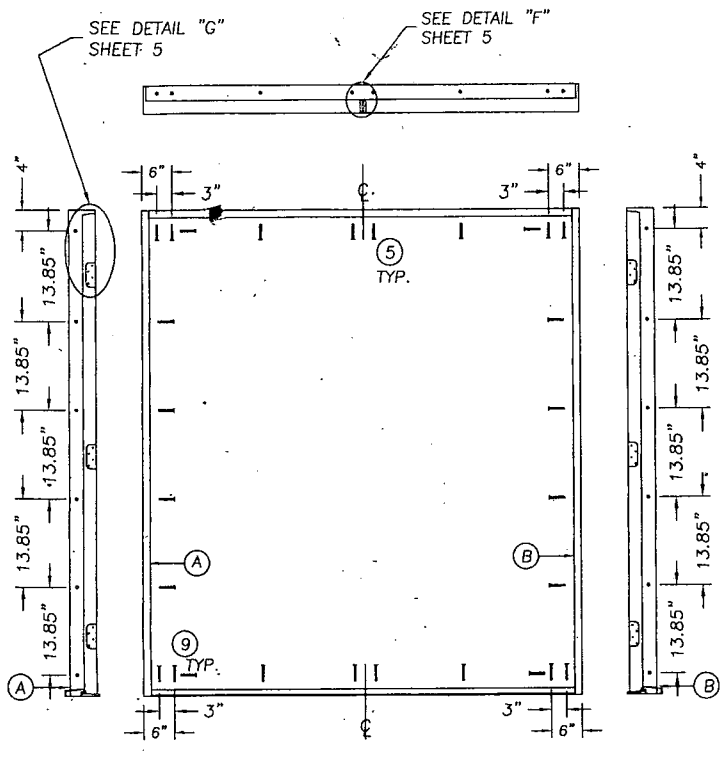

DOUBLE DOOR ANCHORING LOCATIONS

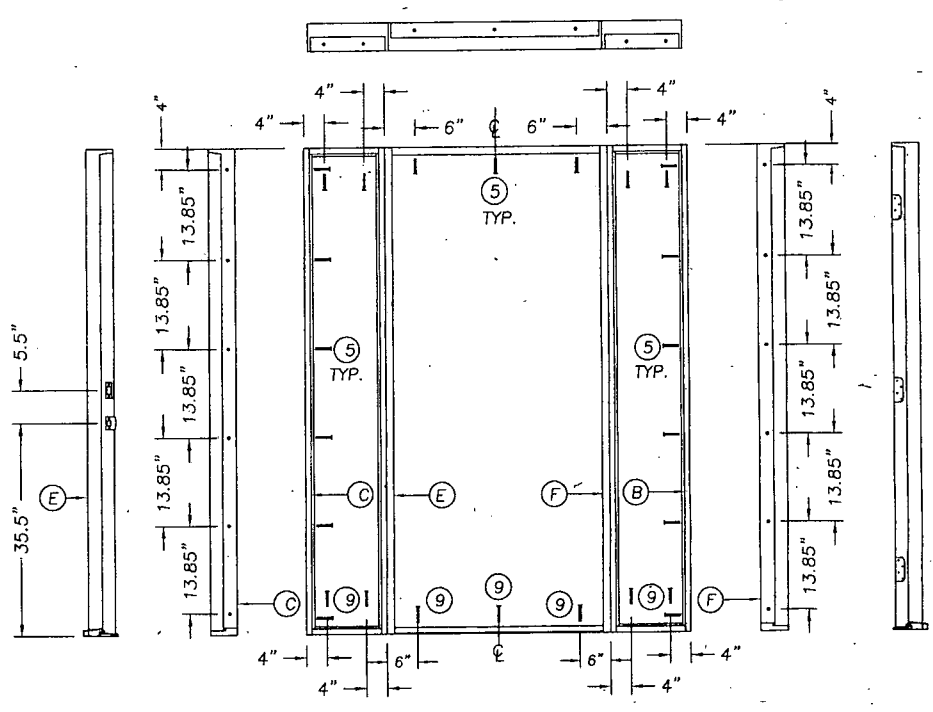

SINGLE DOOR W/SIDELITESANCHORING LAYOUT

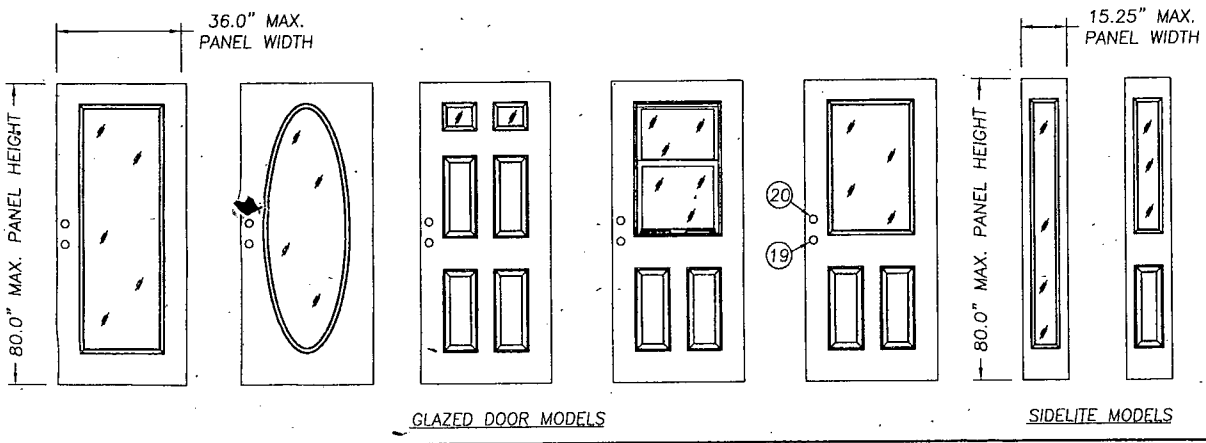

GLAZED DOOR MODELS

SIDELITE MODELS

JELD-WEN, INC.
31725 HIGHWAY 97 NORTH,
CHILOQUIN, OR. 97624
PH. 541.783.2057

PRODUCT: JELD-WEN STEEL OUTSWING WOODEDGE DOOR DOUBLE AND SINGLE UNIT
PART OR ASSEMBLY: ANCHORING LOCATIONS AND DOOR MODELS

NO.	DATE	REVISIONS	BY
2	11/08/02	GENERAL REVISION	KMN
1	6/29/00	GENERAL REVISION	TJH

RW BUILDING CONSULTANTS, INC.
813.684.3831

PRODUCT REVISED
as complying with the Florida Building Code
Acceptance No. 02-1211.10
Expiration Date 03/13/08
By
Miami Dade Product Control Division

DATE: 12/01/99
SCALE: N.T.S.
DWG. BY: TJH
CHK. BY: RW
DRAWING NO.: S-2004
SHEET 6 OF 7

JELD-WEN® STEEL

GLADIATOR and ENERGY SAVER
OUTSWING WOODEDGE STEEL DOOR WITH WOOD FRAMES

GENERAL NOTES

1. THIS PRODUCT IS DESIGNED TO MEET THE SOUTH FLORIDA BUILDING CODE 1994 EDITION FOR MIAMI-DADE COUNTY.
2. WOOD BUCKS BY OTHERS, MUST BE ANCHORED PROPERLY TO TRANSFER LOADS TO THE STRUCTURE.
3. PRODUCT ANCHORS SHALL BE AS LISTED AND SPACED AS SHOWN ON DETAILS. ANCHOR EMBEDMENT TO BASE MATERIAL SHALL BE BEYOND WALL DRESSING OR STUCCO.
4. IMPACT RESISTANT SHUTTERS REQUIRED.
5. DESIGNED PRESSURE RATING SHALL BE AS FOLLOWS: -SEE DESIGN PRESSURE RATING TABLE SHEET ONE.
6. SIDELITES ARE AN OPTION AND CAN BE IN A SINGLE OR DOUBLE CONFIGURATION.
7. THIS SYSTEM DOES MEET THE WATER REQUIREMENTS IN MIAMI-DADE COUNTY.

RESIDENTIAL INSULATED STEEL DOOR
(Common to all frame conditions)

Door Leaf Construction:

Face sheets: 24 ga. (0.021") minimum thickness, 25 ga. (0.018") minimum thickness, galvanized steel A-525 commercial quality - AKDQ per ASTM 620 with yield strength Fy(ave.)=24,600 psi.

Core design: Expanded polystyrene with 1.0 to 1.25 lbs. density.

Construction: Steel face sheets glued to expanded polystyrene (EPS), with wood rails and laminated veneerd lumber stiles and a wood lock block reinforcement.

Frame Construction: The head jambs and side jambs finger jointed pine measuring 4.5625" x 1.25". The head and side jambs are mortised, butted and joined using (3) 7/8" x 2" wire staples. The threshold used is an aluminum outswing bumpface measuring 4.625" x 1".

TABLE OF CONTENTS

SHEET #	DESCRIPTION
1	COMMON (GENERAL NOTES, TYPICAL ELEVATION)
2	VERTICAL CROSS SECTIONS
3	HORIZONTAL CROSS SECTIONS 1/3, 2/3 & 3/3
4	HORIZONTAL CROSS SECTIONS 1/4, 2/4 & 3/4
5	ANCHORING LOCATIONS
6	ANCHORING LOCATIONS & DOOR MODELS
7	BILL OF MATERIALS & GLAZING DETAILS

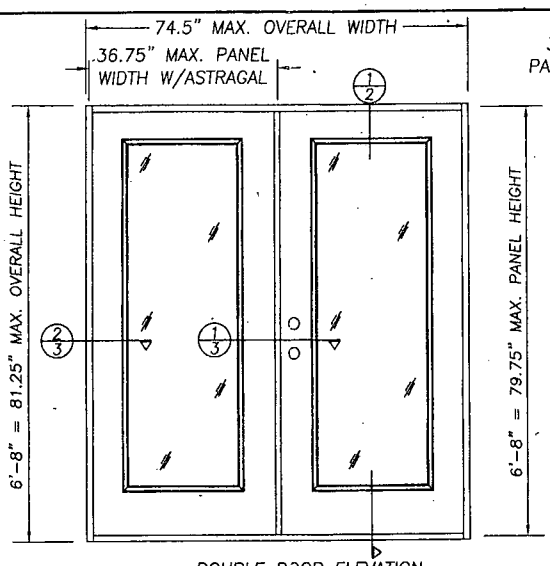

DOUBLE DOOR ELEVATION

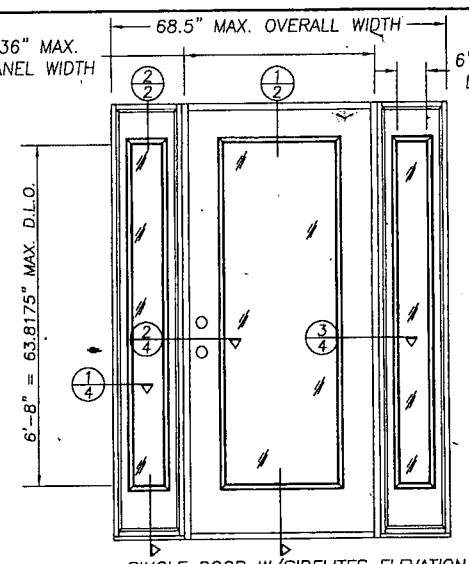

SINGLE DOOR W/SIDELITES ELEVATION

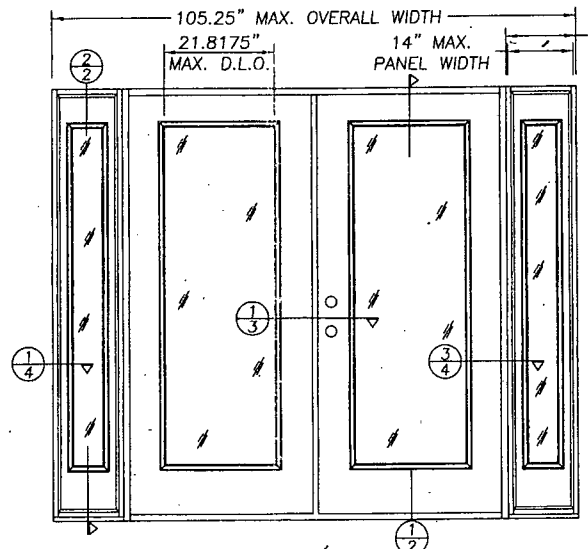

DOUBLE DOOR W/SIDELITES ELEVATION

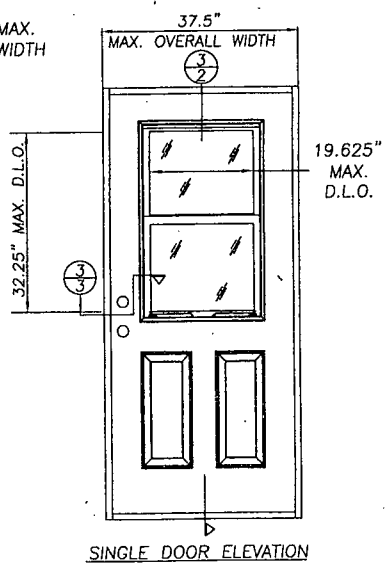

SINGLE DOOR ELEVATION

GLAZED DOOR SHOWN FOR CLARITY OF VIEW (VIEWED INTERIOR)

DESIGN PRESSURE RATING	
	WHERE WATER INFILTRATION REQUIREMENT IS NEEDED
POSITIVE	+ 50.0 PSF
NEGATIVE	- 46.0 PSF

JELD-WEN, INC.
31725 HIGHWAY 97 NORTH
CHILOQUIN, OR. 97624
PH. 541.783.2057

PRODUCT: JELD-WEN STEEL OUTSWING WOODEDGE DOOR DOUBLE AND SINGLE UNIT
PART OR ASSEMBLY: SIDELITES W/AND W/OUT SIDELITES GLAZED ELEVATIONS

NO.	DATE	REVISIONS	BY
2	11/08/02	GENERAL REVISION	KMN
1	6/29/00	GENERAL REVISION	TJH

RW BUILDING CONSULTANTS, INC.
813.684.3831

PRODUCT REVISED
as complying with the Florida Building Code
Acceptance No. 02-1211.10
Expiration Date 03/13/08
By
Miami Dade Product Control Division

DATE: 12/01/99
SCALE: N.T.S.
DWG. BY: TJH
CHK. BY: RW
DRAWING NO.: S-2004
SHEET 1 OF 7

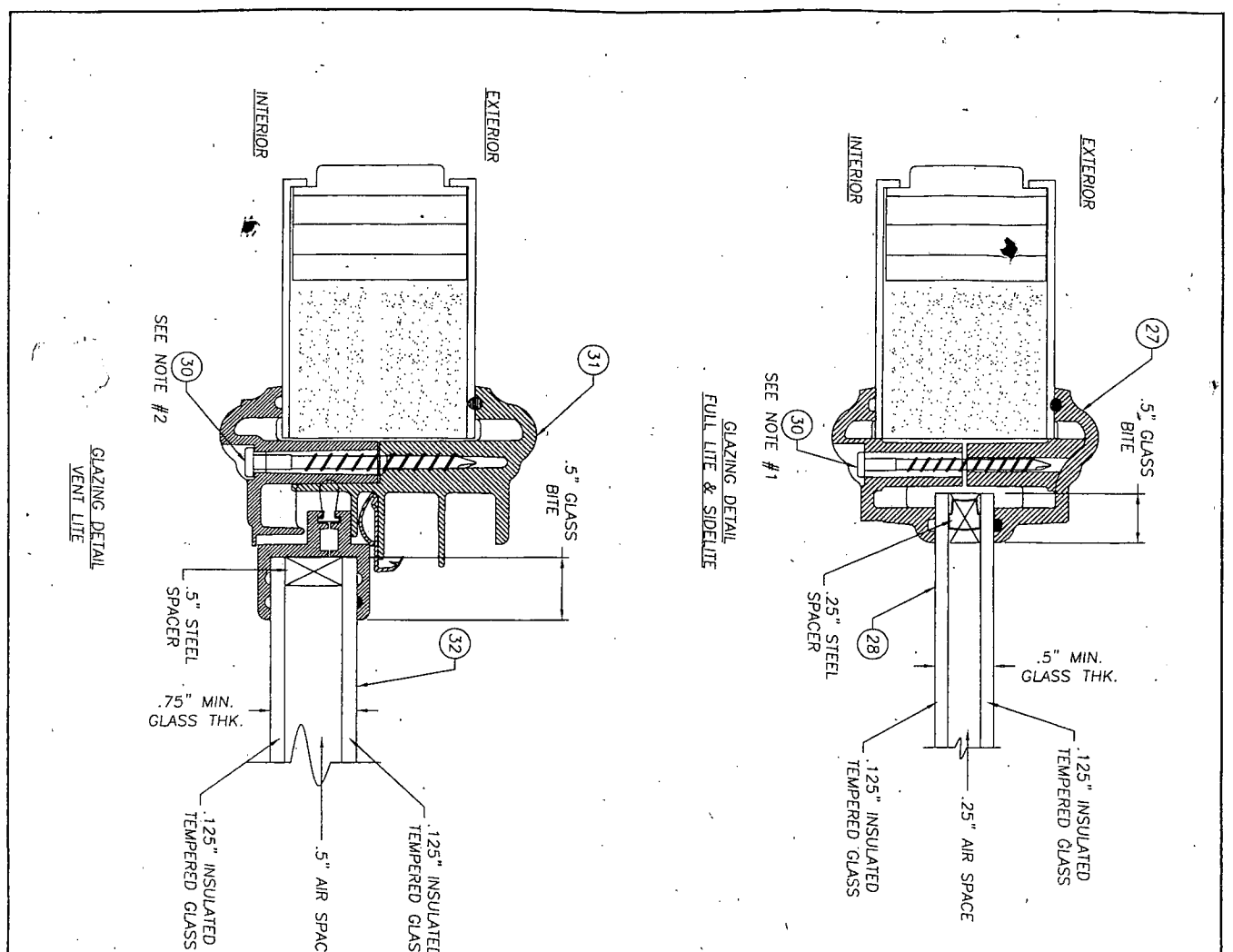

Item	DESCRIPTION	Material
1	HINGE JAMB (1 1/4" x 4 1/12")	WOOD
2	HEAD JAMB (1 1/4" x 4 1/2")	WOOD
3	4" x 4" BUTT HINGE 12GA. (.097" MIN)	STEEL
4	#9 x 1" PHILLIPS FLATHEAD WOOD SCREW (HINGE TO FRAME)	STEEL
5	#8 x 2 1/2" PHILLIPS FLATHEAD WOOD SCREW	STEEL
6	#10 x 2" PHILLIPS FLATHEAD WOOD SCREW (HINGE TO BUCK)	STEEL
7	1/4" TAPCON x 2 1/8" FOR DOORS & 2 1/2" FOR SIDELITES	STEEL
7A	ITW BUILDEX TAPCON (NOA # 96-1226.03) OR	STEEL
7B	ELCO TAPCON (NOA # 97-0731.15)	STEEL
8	BUMPER THRESHOLD (1 1/4"x4 5/8"x5/8")	ALUMINUM
9	COMPRESSION WEATHERSTRIP Q-LON QDS-650	
10	EXTRUDED ASTRAGAL (IMPERIAL #ANH)	ALUMINUM
11	#9 x 1" PHILLIPS FLATHEAD WOOD SCREW	STEEL
12	FACE SHEET 24GA. (GALVANIZED .021" MIN.) FACE SHEET 25GA. (GALVANIZED .018" MIN.)	GALV. STEEL
13	TOP RAIL (1.67" x 1.042")	WOOD
14	BOTTOM RAIL (1.67" x 1.065")	WOOD
15	SIDE STILE (1.067" x 1.065")	WOOD
16	ASTRAGAL THROW BOLT ø.31" x 19.25 L.	STEEL
17	#8 x 1/2" L. TYPE "AB" PANHEAD SMS	STEEL
18	ASTRAGAL REINFORCEMENT PLATE LOCATED TOP & BOTTOM OF ASTRAGAL ATTACHED W	WOOD
18A	8-#6 X 1" PHILLIPS FLATHEAD WOOD SCREW	STEEL
19	KWIKSET TITAN SERIES LOCK	
20	KWIKSET TITAN SERIES DEADBOLT	
21	LATCH SCREWS (SEE LOCK INSTRUCTIONS)	
22	MASONRY WALL	CONC.
23	2x WOOD BUCK	WOOD
24	DYLITE EXPANDED POLYSTYRENE (1.0 TO 1.25 lbs./cu. ft. MIN. DENSITY)	
25	1/4" MAX. SHIMS	WOOD
26	WOOD LOCK REINFORCEMENT	WOOD
27	FULL LITE & SIDELITE FRAME ODL POLY PROPOLENE	
28	1/2" OVERALL INSULATED TEMPERED GLASS	GLASS
29	LATCH JAMB (1 1/4" x 4 1/12")	WOOD
30	#8 x 1 1/2" TEK SCREW (LITE FRAME)	STEEL
31	VENT LITE FRAME ODL POLY PROPOLENE	
32	3/4" OVERALL INSULATED TEMPERED GLASS (VENT LITE PANELS)	GLASS
33	#8 x 2 PHILLIPS FLATHEAD WOOD SCREW	STEEL
34	BLANK JAMB (1 1/4" x 4 1/12")	WOOD

NOTES:
1. SPACING FOR ITEM #30 (#8 x 1 1/2" TEK SCREW) IS AS FOLLOWS FOR SIDELITES & FULL LITES: TOP & BOTTOM; SIDELITE (2) SCREWS 2" IN FROM EACH CORNER. FULL LITES (3) SCREWS 3" IN FROM EACH CORNER. & (1) IN THE CENTER. SIDES FOR BOTH: (6) SCREWS 3.25", 13.75", 26.5", 39.375", 52.0" AND 62.625".
2. SPACING FOR ITEM #30 (#8 x 1 1/2" TEK SCREW) IS AS FOLLOWS FOR THE VENT LITE: TOP & BOTTOM 2.5" IN FROM THE CORNERS & (1) IN THE CENTER. SIDES: 3.25" FROM TOP CORNER & (3) MORE AT 10.375".

PRODUCT REVISED to comply with the Florida Building Code. Product Approval Acceptance No. 02-1211.10 Expiration Date: 07/17/08 Approval Date: 01/23/03 By: Miami Dade Product Control Division

NO	DATE	REVISIONS	BY
2	11/08/02	GENERAL REVISION	KMN
1	6/29/00	GENERAL REVISION	TJH

PRODUCT: JELD-WEN STEEL OUTSWING WOODEDGE DOOR DOUBLE AND SINGLE UNIT
PART OR ASSEMBLY: BILL OF MATERIALS & GLAZING DETAILS

JELD-WEN, INC.
31725 HIGHWAY 97 NORTH
CHILOQUIN, OR. 97624
PH. 541.783.2057

RAW BUILDING CONSULTANTS, INC. 813.684.3831

DATE: 12/01/99
SCALE: N.T.S.
DWG. BY: TJH
CHK. BY: RW
DRAWING NO.: S-2004
SHEET 7 OF 7

MIAMI-DADE

BUILDING CODE COMPLIANCE OFFICE (BCCO)
PRODUCT CONTROL DIVISION

MIAMI-DADE COUNTY, FLORIDA
METRO-DADE FLAGLER BUILDING
140 WEST FLAGLER STREET, SUITE 1603
MIAMI, FLORIDA 33130-1563
(305) 375-2901 FAX (305) 375-2908

NOTICE OF ACCEPTANCE (NOA)

Jeld-Wen, Inc.
31725 Highway 97 North
Chiloquin. OR 97624

SCOPE:
This NOA is being issued under the applicable rules and regulations governing the use of construction materials. The documentation submitted has been reviewed by Miami-Dade County Product Control Division and accepted by the Board of Rules and Appeals (BORA) to be used in Miami Dade County and other areas where allowed by the Authority Having Jurisdiction (AHJ).

This NOA shall not be valid after the expiration date stated below. The Miami-Dade County Product Control Division (In Miami Dade County) and/or the AHJ (in areas other than Miami Dade County) reserve the right to have this product or material tested for quality assurance purposes. If this product or material fails to perform in the accepted manner, the manufacturer will incur the expense of such testing and the AHJ may immediately revoke, modify, or suspend the use of such product or material within their jurisdiction. BORA reserves the right to revoke this acceptance, if it is determined by Miami-Dade County Product Control Division that this product or material fails to meet the requirements of the applicable building code.
This product is approved as described herein, and has been designed to comply with the High Velocity Hurricane Zone of the Florida Building Code.

DESCRIPTION: Jeld-Wen "Gladiator" & "Energy Saver" O/S Glazed W/E Residential Ins. Steel Door

APPROVAL DOCUMENT: Drawing No. **S-2004**, titled "Jeld-Wen Steel Outswing Woodedge Door Double and Single Unit", sheets 1 through 7 of 7, prepared by R.W. Building Consultants Inc, dated 12/01/99 with revision on 11/08/02, bearing the Miami-Dade County Product Control Revision stamp with the Notice of Acceptance number and expiration date by the Miami-Dade County Product Control Division.

MISSILE IMPACT RATING: None

LABELING: Each unit shall bear a permanent label with the manufacturer's name or logo, city, state and following statement: "Miami-Dade County Product Control Approved", unless otherwise noted herein.

RENEWAL of this NOA shall be considered after a renewal application has been filed and there has been no change in the applicable building code negatively affecting the performance of this product.

TERMINATION of this NOA will occur after the expiration date or if there has been a revision or change in the materials, use, and/or manufacture of the product or process. Misuse of this NOA as an endorsement of any product, for sales, advertising or any other purposes shall automatically terminate this NOA. Failure to comply with any section of this NOA shall be cause for termination and removal of NOA.

ADVERTISEMENT: The NOA number preceded by the words Miami-Dade County, Florida, and followed by the expiration date may be displayed in advertising literature. If any portion of the NOA is displayed, then it shall be done in its entirety.

INSPECTION: A copy of this entire NOA shall be provided to the user by the manufacturer or its distributors and shall be available for inspection at the job site at the request of the Building Official.
This NOA **revises and renews NOA # 99-1007.01** and, consists of this page 1 as well as approval document mentioned above.
The submitted documentation was reviewed by **Jaime M. Eisen, P.E.**

PRODUCT CONTROL ACCEPTED

NOA No 02-1211.10
Expiration Date: July 17, 2008
Approval Date: January 23, 2003
Page 1

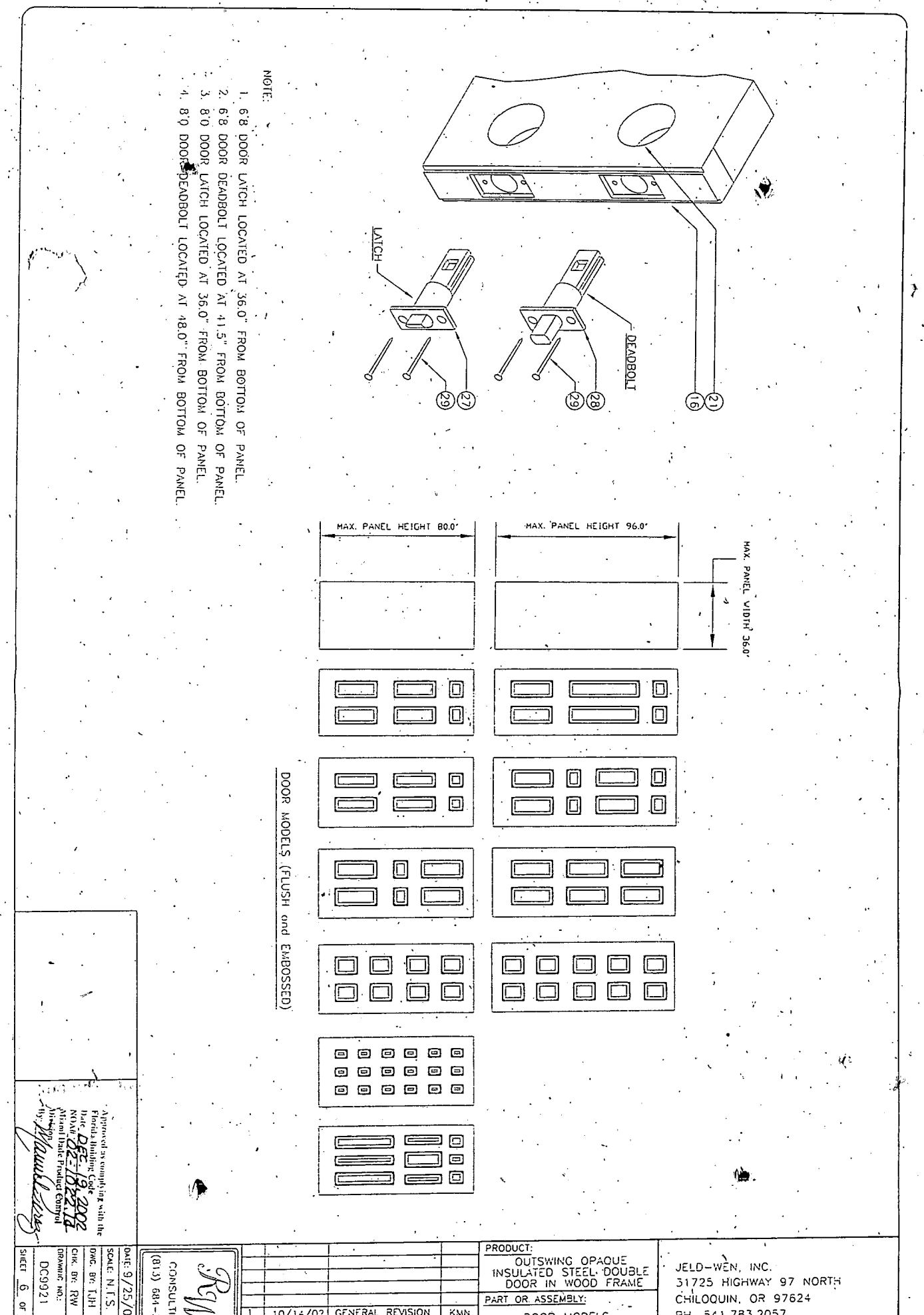

MIAMI-DADE

BUILDING CODE COMPLIANCE OFFICE (BCCO)
PRODUCT CONTROL DIVISION

MIAMI-DADE COUNTY, FLORIDA
METRO-DADE FLAGLER BUILDING
140 WEST FLAGLER STREET, SUITE 1603
MIAMI, FLORIDA 33130-1563
(305) 375-2901 FAX (305) 375-2908

NOTICE OF ACCEPTANCE (NOA)

Jeld-Wen, Inc.
317525 Highway 97 N.
Chiloquin, OR 97624

SCOPE:

This NOA is being issued under the applicable rules and regulations governing the use of construction materials. The documentation submitted has been reviewed by Miami-Dade County Product Control Division and accepted by the Board of Rules and Appeals (BORA) to be used in Miami Dade County and other areas where allowed by the Authority Having Jurisdiction (AHJ).

This NOA shall not be valid after the expiration date stated below. The Miami-Dade County Product Control Division (In Miami Dade County) and/or the AHJ (in areas other than Miami Dade County) reserve the right to have this product or material tested for quality assurance purposes. If this product or material fails to perform in the accepted manner, the manufacturer will incur the expense of such testing and the AHJ may immediately revoke, modify, or suspend the use of such product or material within their jurisdiction. BORA reserves the right to revoke this acceptance, if it is determined by Miami-Dade County Product Control Division that this product or material fails to meet the requirements of the applicable building code.

This product is approved as described herein, and has been designed to comply with the High Velocity Hurricane Zone of the Florida Building Code.

DESCRIPTION: Series "Jeld-Wen®" 6'8" W/E Outswing Opaque Insulated Steel Door w/wo Sidelites-Impact Resistant

APPROVAL DOCUMENT: Drawing No. **S-2104**, titled "Outswing Opaque Wood Edge Steel Door Up to 107" x 6-8 Unit", sheets 1 through 7 of 7, prepared by R.W Building Consultants, Inc., dated 9/11/01 with revision 3 dated 10/22/02, bearing the Miami-Dade County Product Control Revision stamp with the Notice of Acceptance number and expiration date by the Miami-Dade County Product Control Division.

MISSILE IMPACT RATING: Large and Small Missile Impact

LABELING: Each unit shall bear a permanent label with the manufacturer's name or logo, city, state and following statement: "Miami-Dade County Product Control Approved", unless otherwise noted herein.

RENEWAL of this NOA shall be considered after a renewal application has been filed and there has been no change in the applicable building code negatively affecting the performance of this product.

TERMINATION of this NOA will occur after the expiration date or if there has been a revision or change in the materials, use, and/or manufacture of the product or process. Misuse of this NOA as an endorsement of any product, for sales, advertising or any other purposes shall automatically terminate this NOA. Failure to comply with any section of this NOA shall be cause for termination and removal of NOA.

ADVERTISEMENT: The NOA number preceded by the words Miami-Dade County, Florida, and followed by the expiration date may be displayed in advertising literature. If any portion of the NOA is displayed, then it shall be done in its entirety.

INSPECTION: A copy of this entire NOA shall be provided to the user by the manufacturer or its distributors and shall be available for inspection at the job site at the request of the Building Official.
This NOA **revises NOA# 01-1218.05** and, consists of this page 1 as well as approval document mentioned above.
The submitted documentation was reviewed by **Jaime Eisen, P.E.**

PRODUCT CONTROL ACCEPTED

NOA No 02-1211.18
Expiration Date: August 15, 2007
Approval Date: January 30, 2003
Page 1

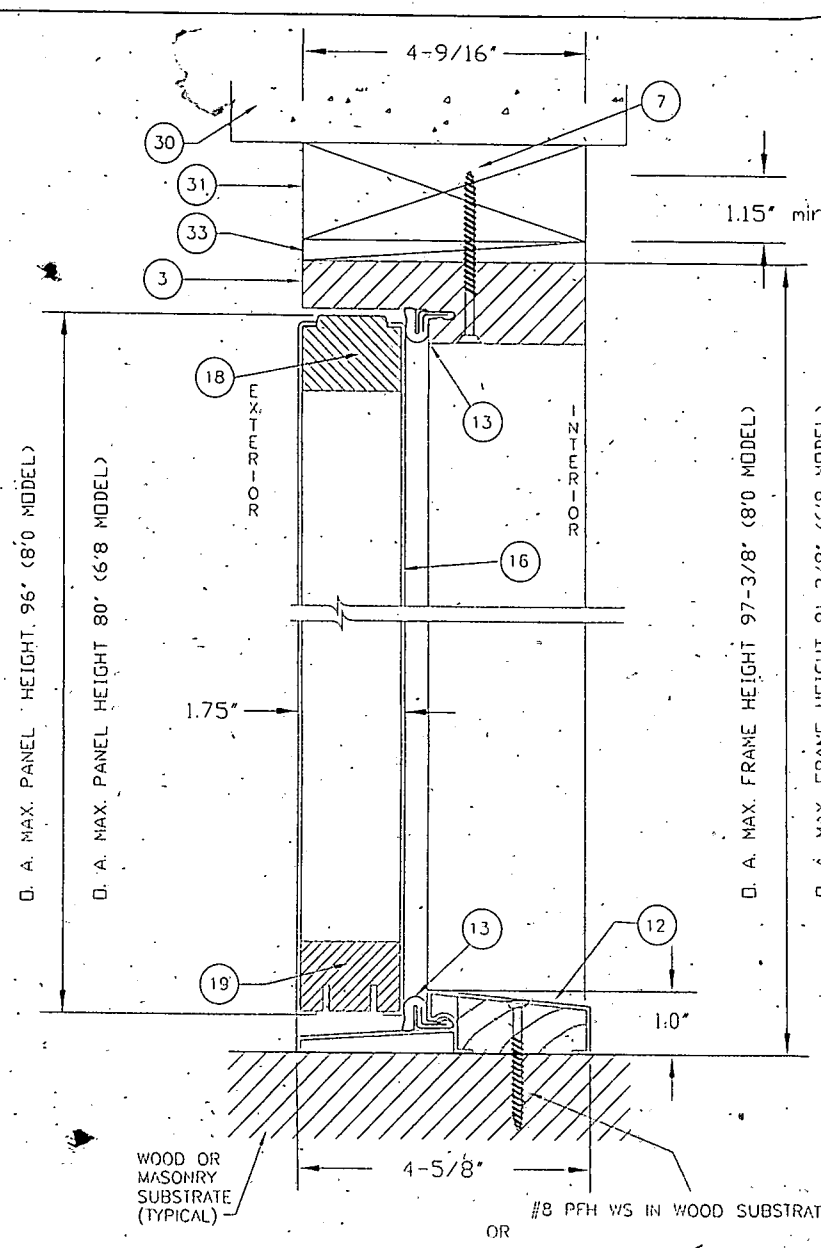

ITEM	DESCRIPTION
1	N/A
2	Hinge jamb (1-1/4" x 4-1/2" Wood Jamb) - PINE
3	Head jamb (1-1/4" x 4-1/2" Wood Jamb) - PINE
4	4" x 4" butt hinges 12ga.(.097") C.R. STEEL
5	N/A
6	#9 X 1" PFH wood screw (hinge to frame)
7	#8 x 3" PFH wood screw
8	#10 x 2" PFH wood screw
9	1/4" tapcon (1-1/4" into masonry)
	ITW BUILDEX TAPCON (NOA # 96-1226.03) or
	ELCO TAPCON (NOA # 97-0731.15)
10	N/A
11	N/A
12	Bumper threshold (1-1/4"x 4 5/8 x 5/8" extruded alum.)
13	Compression weatherstrip Schlegel O-Lon ODS 650
14	Extruded Aluminum Astragal (Imperial # ANH)
15	#9 x 1" PFH wood screw
16	Face sheet 24ga.(.020 thk.min)galv.steel A-525 Fy=24,600 psi.
17	N/A
18	Top Rail (wood 1.67" x 1.042")
19	Bottom Rail (wood 1.067" x 1.065")
20	Side Stile (wood 1.067" x 1.042" laminated veneer lumber)
21	Wood lock reinforcement (1.67" x 2.75" x 4.75")
22	Astragal Throw Bolt (Steel .31" diameter 19.25" long)
23	N/A
24	N/A
25	N/A
26	Astragal Reinforcement Plate - located top and bottom of
	Astragal (1.125" wide x 18.0" long X .060" thick steel
	Attached with 8- #6 x 1" PFH Wood Screw
27	Kwikset titan series lock # 200
28	Kwikset titan series deadbolt # 600
29	#8 X 1-1/2" PFH WS
30	Masonry wall.
31	2x wood buck
32	Expanded Polystyrene, (1.0 to 1.25 lb. Density)
	DYLITE MFG. BY JELD-WEN
33	1/4" max. shim space
34	Wood lock reinforcement (1.67" x 2.75" x 11.875")

JELD-WEN, INC.
31725 HIGHWAY 97 NORTH
CHILOQUIN, OR 97624
PH. 541.783.2057

PRODUCT: OUTSWING OPAQUE INSULATED STEEL DOUBLE DOOR IN WOOD FRAME

PART OR ASSEMBLY: VERTICAL CROSS SECTIONS AND BILL OF MATERIALS

NO	DATE	BY
1	10/14/02 GENERAL REVISION	KMN

REVISIONS

RW CONSULTING (813) 684-3831

Approved as complying with the Florida Building Code
Date: DEC. 19, 2002
NOA# 02-1022.14
Miami Dade Product Control Division
By: Manuel Perez

DATE: 9/25/00
SCALE: N.T.S.
DWG. BY: TJH
CHK. BY: RW
DRAWING NO.: DC9921
SHEET 5 OF 6

JELD-WEN® Steel

WOOD EDGE OPAQUE INSULATED STEEL DOOR
OUTSWING 6-8 UNITS W/AND W/OUT SIDELITES

GENERAL NOTES

1. THIS PRODUCT IS DESIGNED TO COMPLY WITH THE FLORIDA BUILDING CODE.
2. WOOD BUCKS BY OTHERS MUST BE ANCHORED PROPERLY TO TRANSFER LOADS TO THE STRUCTURE.
3. PRODUCT ANCHORS SHALL BE AS LISTED AND SPACED AS SHOWN ON DETAILS. ANCHOR EMBEDMENT TO BASE MATERIAL SHALL BE BEYOND WALL DRESSING OR STUCCO.
4. DESIGNED PRESSURE RATING SEE TABLE PAGE 1.
5. THIS SYSTEM MEET THE WATER REQUIREMENTS FOR "HIGH VELOCITY HURRICANE ZONES". SEE NOTE BELOW DESIGN PRESSURE CHART.
6. THIS SYSTEM REQUIRES WINDBORNE DEBRIS EXTERNAL PROTECTION AS PRESCRIBED IN SECTION 1626.1 OF THE FLORIDA BUILDING CODE FOR THE SIDELITES ONLY.
7. SIDELITES ARE AN OPTION AND CAN BE USED IN A SINGLE OR DOUBLE CONFIGURATION.

RESIDENTIAL INSULATED STEEL DOOR
(Common to all frame conditions)

Door Leaf Construction:

Face sheets: 24 ga. (0.020") minimum thickness, Galvanized steel A-525 commercial quality - AKDO per ASTM 620 with yield strength Fy(ave.)=23,675 psi.

Core design: Expanded polystyrene with 1.0 to 1.25 lbs. density, by Jeld-Wen, Inc.

Panel Construction: The active and inactive panels are constructed from 24 ga. (0.020" min.) galvanized steel. The face sheet top and bottoms are bent 90° over the top and bottom rails. The top rail consists of LVL measuring 1.57" x 1.042". The bottom rail is roll formed 0.021" galvanized steel measuring 1.67" x 1.21" with a 1.645" x 3.0" x 0.831" piece of pressed fiber board at each corner attached w/0.5" x 2.0" wire staples. The sides of the face sheet are roll formed into the LVL latch stile and pine hinge stile measuring 1.67" x 1.0". The interior cavity is filled with polystyrene. The face sheets are glued to the polystyrene.

Sash Construction: The sash is constructed from 24GA. (0.020" min.) galvanized steel. The edges of the face sheet are bent 90° over the polystyrene core and glued to it. The sashes are routed to receive the ODL (HP Polypropylene - Thermofil-P6-30FM0391) & Trinity lite frames. The units are glazed with 0.125" tempered gloss. The lite frames are wet glazed on the exterior.

Frame Construction: The frames are constructed from Pine jambs measuring 4.563" x 1.25". The head jambs are mortised and butt joined to the side jambs and attached with (3) 16 ga. 2" x 7/16" crown wire staples. The units use a bump face threshold measuring 4.041" x 1.0". The threshold is attached to the frame with (3) 16GA. 2" x 7/16" crown wire staples.

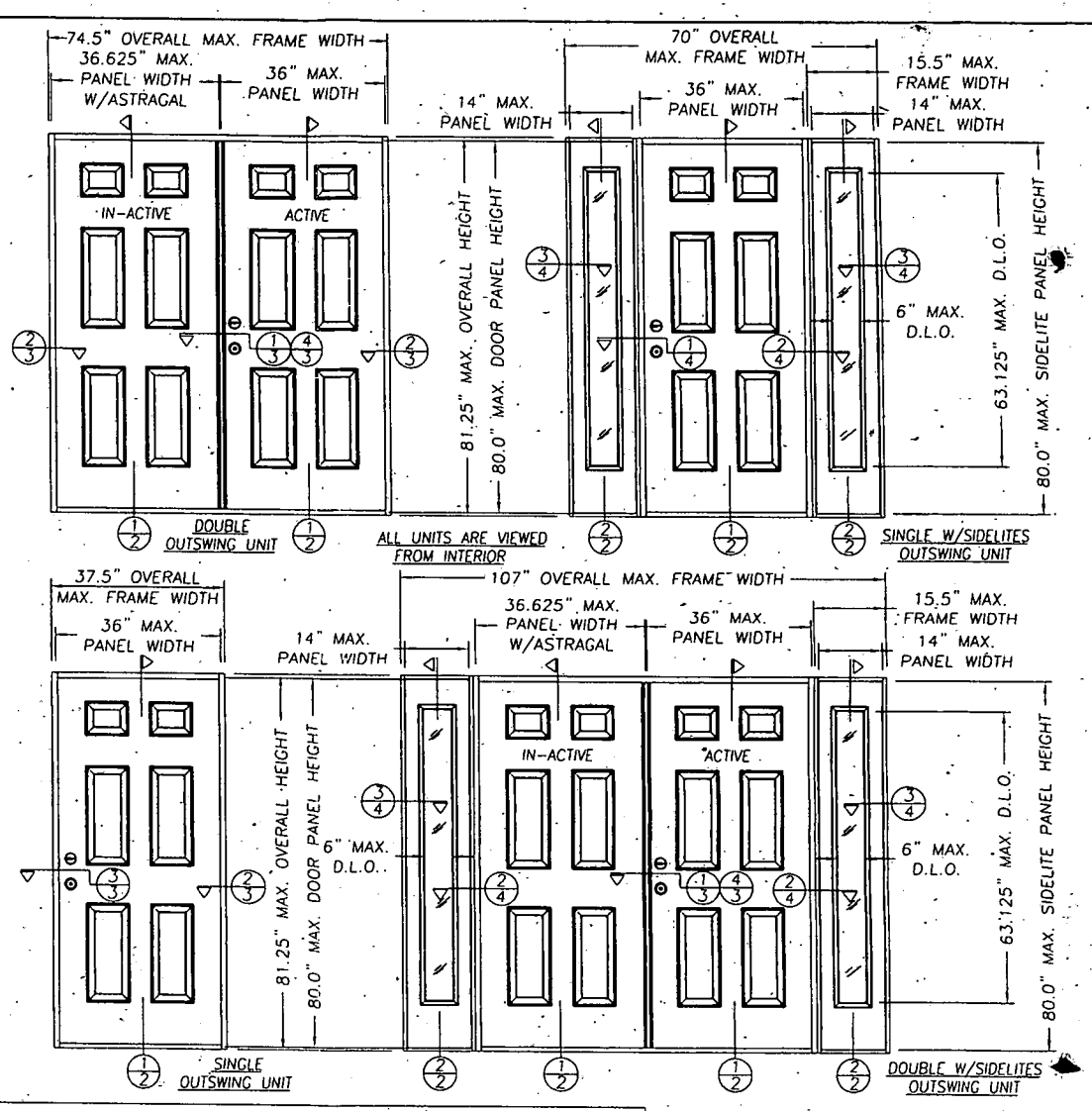

TABLE OF CONTENTS	
SHEET #	DESCRIPTION
1	GENERAL NOTES AND TYPICAL ELEVATIONS
2	VERTICAL CROSS SECTIONS & BILL OF MATERIALS
3	HORIZONTAL CROSS SECTIONS
4	HORIZONTAL CROSS SECTIONS & NOTES
5	ANCHORING LOCATIONS & DETAILS
6	ANCHORING LOCATIONS & GLAZING DETAIL
7	UNIT COMPONENTS

DESIGN PRESSURE RATING (WHERE WATER INFILTRATION REQUIREMENT IS NEEDED)		
UNIT TYPE	POSITIVE	NEGATIVE
SINGLE W/WO SIDELITES	+66.7 psf	-70.0 psf
DOUBLE W/WO SIDELITES (WINDJAMBER II ASTRAGAL)	+66.7 psf	-70.0 psf
DOUBLE W/WO SIDELITES (IMPERIAL ASTRAGAL)	+57.0 psf	-57.0 psf

JELD-WEN, INC.
31725 HIGHWAY 97 NORTH
CHILOQUIN, OR. 97624
PH. 541.783.2057

PRODUCT: OUTSWING OPAQUE WOOD EDGE STEEL DOOR UP TO 107" x 6-8 UNIT

PART OR ASSEMBLY: GENERAL NOTES & TYPICAL ELEVATIONS

NO	DATE	BY
3	10/22/02 ADDED TRINITY FRAME	ZRK
2	06/06/02 GENERAL REVISION	TJH
1	03/14/02 GENERAL REVISION	TJH

REVISIONS

RW BUILDING CONSULTANTS, INC. 813.659.9197

PRODUCT REVISED
as complying with the Florida Building Code
Acceptance No D2-1211.18
Expiration Date 08/15/07
By: Miami-Dade Product Control Division

DATE: 09/11/01
SCALE: N.T.S.
DWG. BY: TJH
CHK. BY: RW
DRAWING NO.: S-2104
SHEET 1 OF 7

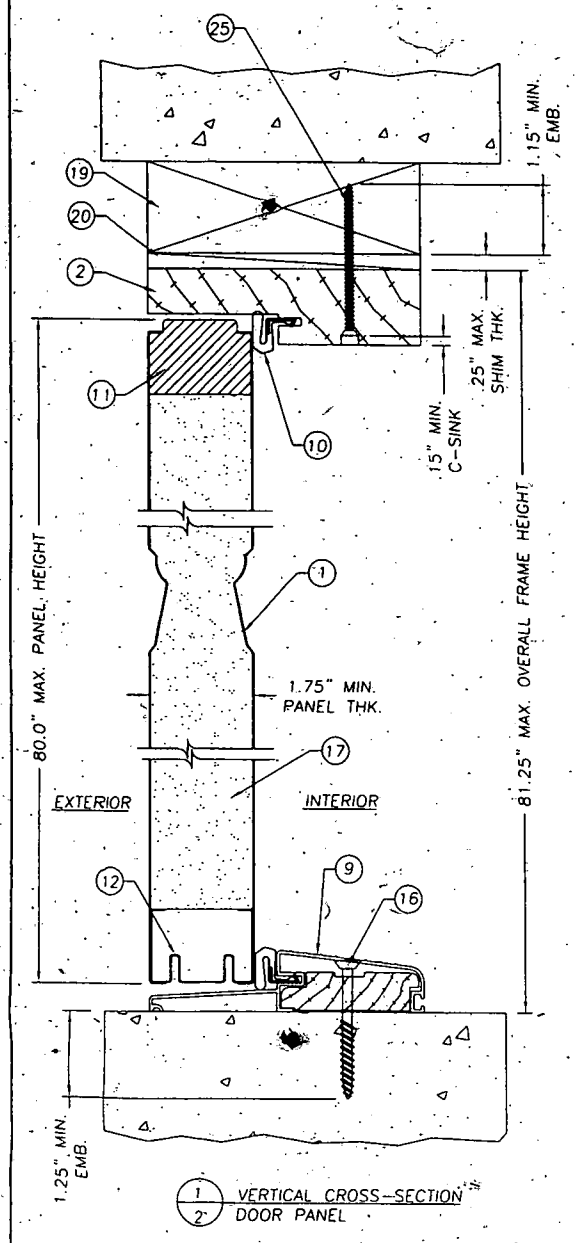

1/2 VERTICAL CROSS-SECTION DOOR PANEL

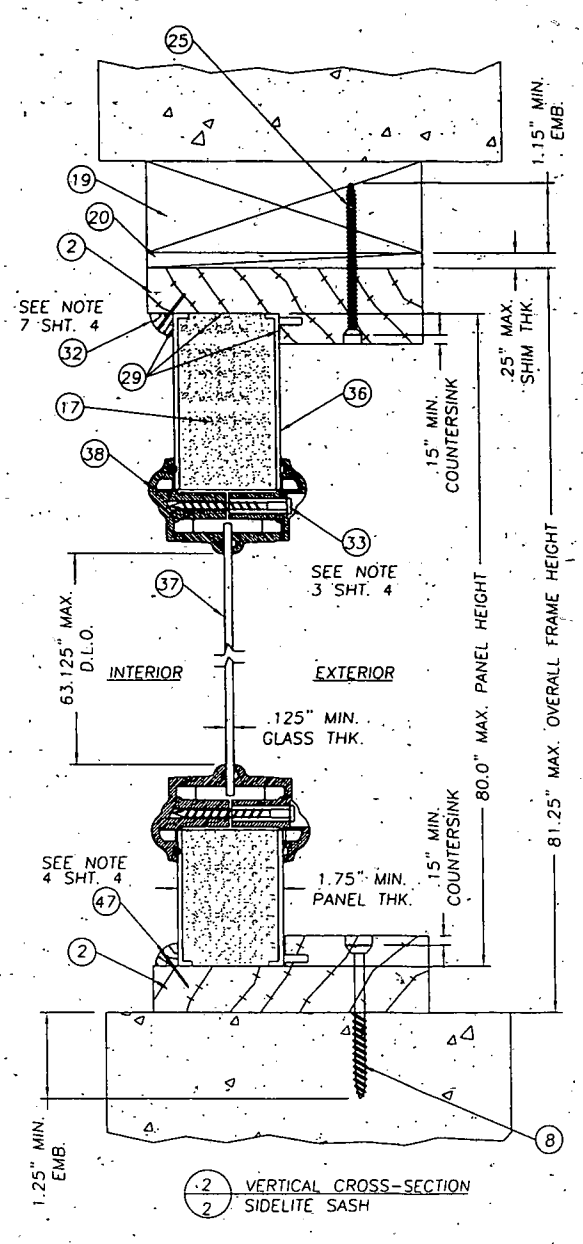

2/2 VERTICAL CROSS-SECTION SIDELITE SASH

ITEM	DESCRIPTION.	MATERIAL
1	DOOR PANEL FACE SHEET 24GA. (.021" MIN.)	STEEL
2	HEAD JAMB (1 1/4" x 4 9/16" PONDEROSA FINGER JOINTED PINE)	PINE
3	HINGE JAMB (1 1/4" x 4 9/16" PONDEROSA FINGER JOINTED PINE)	PINE
4	SIDELITE BLANK JAMB (1 1/4" x 4 9/16" PONDEROSA FINGER JOINTED PINE)	PINE
5	4" x 4" BUTT HINGE 12ga.(.097" HAGER)	STEEL
6	#10 X 1" PFH WOOD SCREW (HINGE TO DOOR)	STEEL
7	LVL LATCH SIDE STILE (1.67 X 1.0")	-
8	1/4" x 2 1/2" TAPCON	STEEL
9	OUTSWING BUMPER THRESHOLD (.050" EXTRUDED ALUM. BY PEMKO)	ALUM.
10	COMPRESSION WEATHERSTRIP (SCHLEGEL Q-LON QDS 650)	FOAM
11	TOP RAIL (1.67" x 1.0")	WOOD
12	BOTTOM RAIL (1.73" x 1.21" x 0.021" THK. MIN. 24GA.)	STEEL
13	DOOR HINGE STILE (1.67" x 1.0")	WOOD
14	#10 x 1 3/4" PFH WOOD SCREW	STEEL
15	WOOD LOCK BLOCK (1.71" x 4.0" x 11.875")	WOOD
16	1/4" x 2 1/4" TAPCON	STEEL
17	EXPANDED POLYSTYRENE (1.0 to 1.25 lb. DENSITY) BY JELD-WEN.	FOAM
18	OPTIONAL EXTRUDED ALUM. ASTRAGAL (.050" WALL IMPERIAL)	ALUM.
19	2x WOOD SUB BUCK	WOOD
20	SHIM MATERIAL (.25" MAX. THK.)	-
21	KWIKSET TITAN 700 SERIES KNOB	-
22	KWIKSET TITAN 700 SERIES DEADBOLT	-
23	BRAD TRIM NAIL 3/4" L.	STEEL
24	#8 x 2" PFH WOOD SCREW	STEEL
25	#8 x 2 1/2" PFH WOOD SCREW	STEEL
26	ASTRAGAL EXTRUDED ALUM. (WR68J WINDJAMBER II)	ALUM.
27	YALE KNOB HERITAGE SERIES	-
28	YALE DEADBOLT HERITAGE SERIES	-
29	SILICONE CAULK (CR-LAWRENCE 33C)	SILICONE
30	GLAZING COMPOUND (OSD BY ODL)	SILICONE
31	#8 x 1" PFH WOOD SCREW (WR68J ASTRAGAL TO DOOR)	STEEL
32	3/8" x 3/8" 1/4" ROUND SIDELITE STOP	WOOD
33	#8 x 1 1/2" TEK SCREW (LITE FRAME)	STEEL
34	SCHLAGE KNOB SET #F51	-
35	SCHLAGE DEADBOLT #B360	-
36	STEEL SIDELITE PANEL 24GA. (.021" MIN. STEEL)	STEEL
37	1/8" TEMPERED GLASS (BY PPG)	GLASS
38	LITE FRAME (ODL HP POLYPROP. THERMOFIL-P6-30FM0391)	POLYPROP.
39	LATCH JAMB (1 1/4" x 4 9/16" PONDEROSA FINGER JOINTED PINE)	PINE
40	#10 x 2" PFH WOOD SCREW	STEEL
41	#10 x 1" PFH WOOD SCREW (IMPERIAL ASTRAGAL TO DOOR)	STEEL
42	3/4" THK. x 4 9/16" DEEP PRESSURE TREATED REINFORCEMENT	WOOD
43	1/4" x 1 3/8" WOOD MULLION CAP	WOOD
44	16GA. BRAD TRIM NAIL 1" L.	STEEL
45	GLAZING COMPOUND DOW. 1199 SILICONE	SILICONE
46	LITE FRAME BY TRINITY FOR 1/2" GLASS	POLYPROP.
47	1/2" INSULTED TEMP. GLASS BY TRINITY/AMPAC	-
48	LITE FRAME BY TRINITY FOR 1" GLASS	POLYPROP.
49	1" INSULATED TEMP. GLASS BY TRINITY/AMPAC	-
50	LITE FRAME SCREW #6 X 1 1/2" PANHEAD	STEEL

JELD-WEN, INC.
31725 HIGHWAY 97 NORTH
CHILOQUIN, OR. 97624
PH. 541.783.2057

PRODUCT: OUTSWING OPAQUE WOOD EDGE STEEL DOOR UP TO 107" x 6-8 UNIT
PART OR ASSEMBLY: VERTICAL CROSS SECTIONS & BILL OF MATERIALS

NO	DATE	REVISIONS	BY
3	10/22/02	ADDED TRINITY FRAME	ZRK
2	06/06/02	GENERAL REVISION	TJH
1	03/14/02	GENERAL REVISION	TJH

RW BUILDING CONSULTANTS, INC. 813.659.9197

PRODUCT REVISED
as complying with the Florida Building Code
Acceptance No. 02-1211.18
Expiration Date: 08.15.07
By
Miami-Dade Product Control Division

DATE: 09/11/01
SCALE: N.T.S.
DWG. BY: TJH
CHK. BY: RW
DRAWING NO.: S-2104
SHEET 2 OF 7

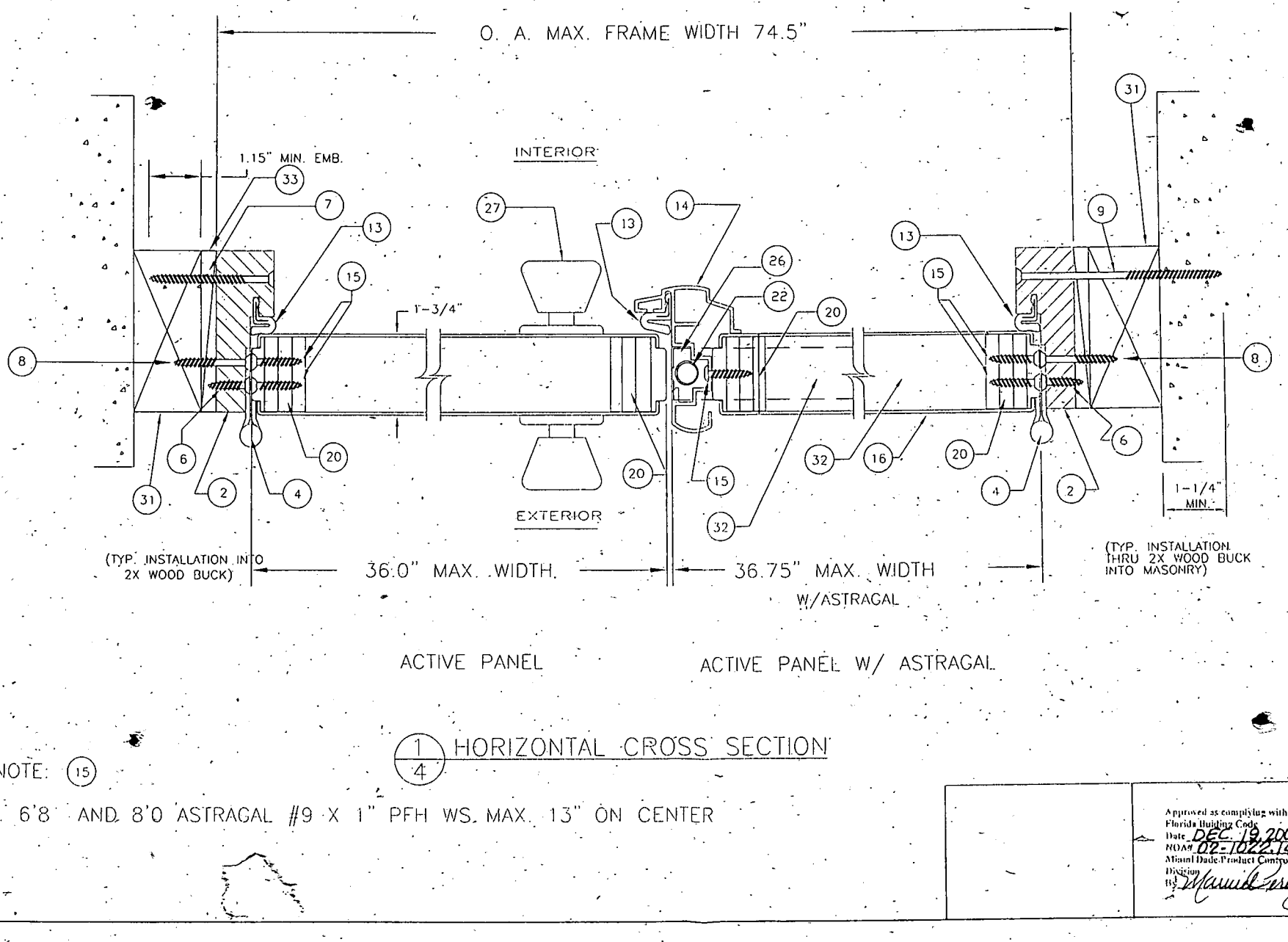

1/4 HORIZONTAL CROSS SECTION

NOTE: (15)

1. 6'8" AND 8'0" ASTRAGAL #9 X 1" PFH WS. MAX. 13" ON CENTER

JELD-WEN, INC.
31725 HIGHWAY 97 NORTH
CHILOQUIN, OR 97624
PH. 541.783.2057

PRODUCT: OUTSWING OPAQUE INSULATED STEEL DOUBLE DOOR IN WOOD FRAME
PART OR ASSEMBLY: DOUBLE DOOR HORIZONTAL CROSS SECTION

NO	DATE	REVISIONS	BY
1	10/14/02	GENERAL REVISION	KMN

RW CONSULTING (813) 684-3831

Approved as complying with the Florida Building Code
Date DEC. 19, 2002
NOA# 02-1022.14
Miami-Dade Product Control Division
By

DATE: 9/25/00
SCALE: N.T.S.
DWG. BY: TJH
CHK. BY: RW
DRAWING NO.: DC9921
SHEET 4 OF 6

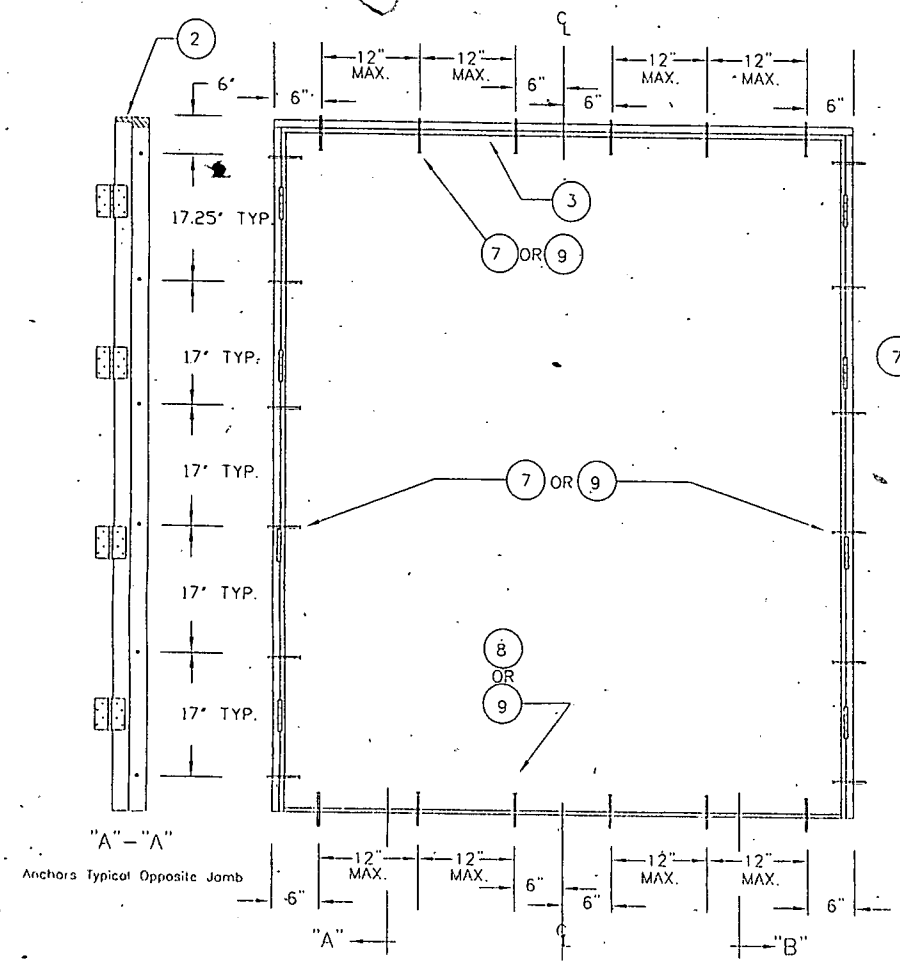

ANCHOR LOCATIONS

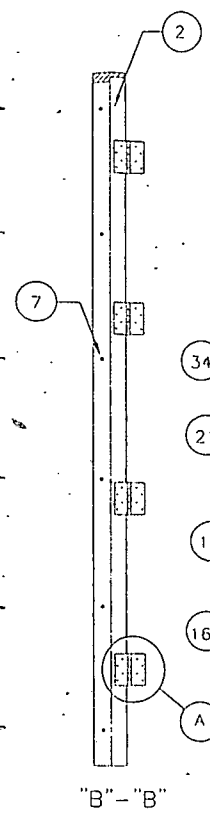

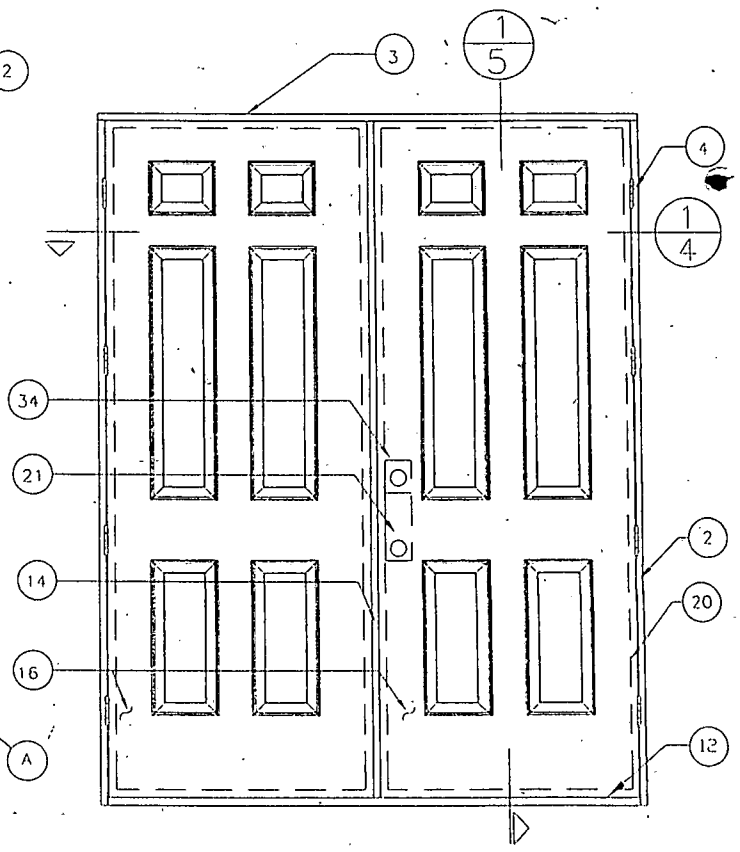

8'0" 6 PANEL DOOR
VIEWED FROM EXTERIOR
(SHOWN FOR CLARITY OF VIEW)

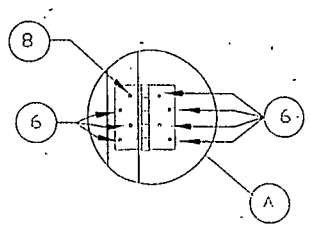

JELD-WEN, INC.
31725 HIGHWAY 97 NORTH
CHILOQUIN, OR 97624
PH. 541.783.2057

PRODUCT: OUTSWING OPAQUE INSULATED STEEL DOUBLE DOOR IN WOOD FRAME
PART OR ASSEMBLY: DOUBLE 6'8" ANCHORS AND ELEVATIONS

NO	DATE	REVISIONS	BY
1	10/14/02	GENERAL REVISION	KMN

RW CONSULTING (813) 684-3831

Approved as complying with the Florida Building Code
Date DEC. 19,2002
NOA# 02-1022.14
Miami Dade Product Control Division
By:

DATE: 9/25/00
SCALE: N.T.S.
DWG. BY: TJH
CHK. BY: RW
DRAWING NO.: DC9921
SHEET 3 OF 6

ASTRAGAL RETAINER BOLTS (4) BOLTS TOTAL, (2) 8.0" L. x .312" DIA. @ TOP & (2) 8.0" L. x .312" DIA. @ BOTTOM

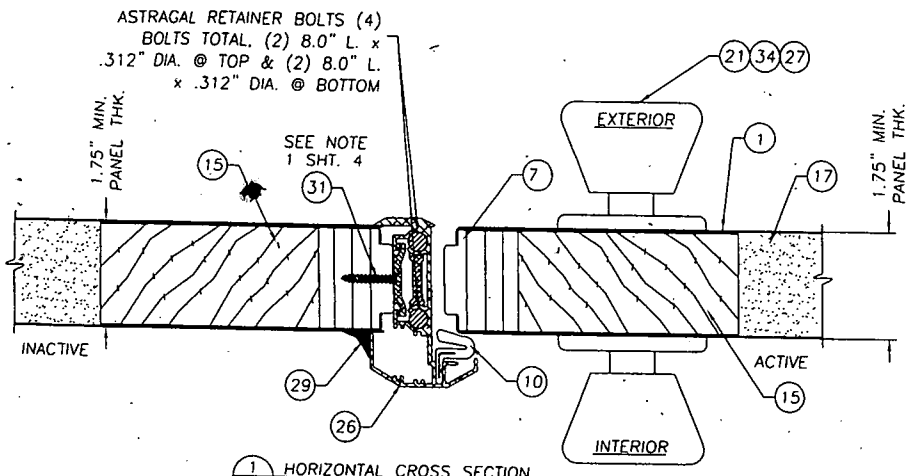

1/3 HORIZONTAL CROSS SECTION AT ASTRAGAL W/ITEM #26 WINDJAMBER WR68J SEE DESIGN PRESSURE RATING CHART SHEET 1

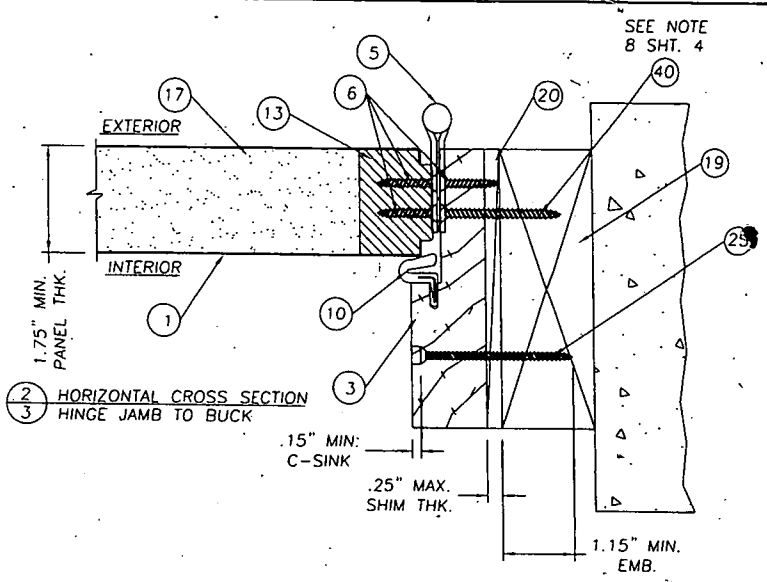

2/3 HORIZONTAL CROSS SECTION HINGE JAMB TO BUCK

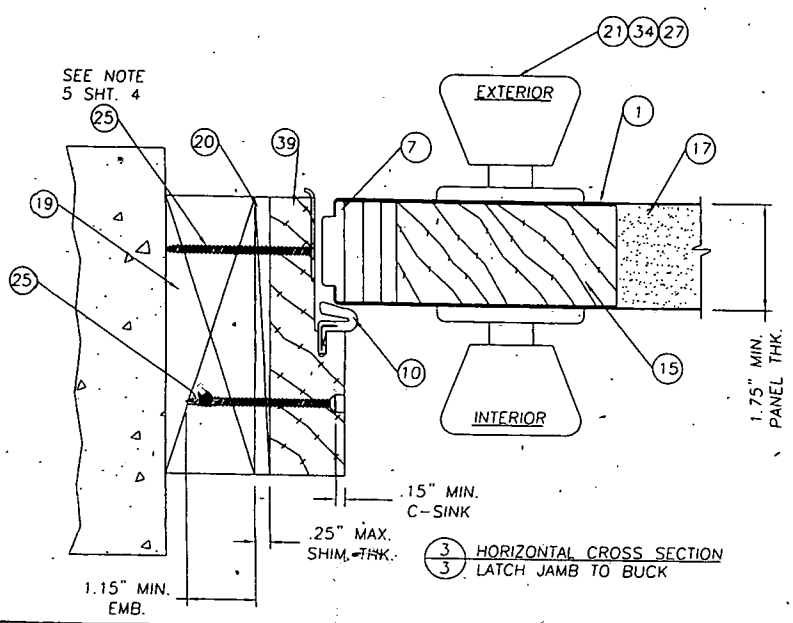

3/3 HORIZONTAL CROSS SECTION LATCH JAMB TO BUCK

ASTRAGAL RETAINER BOLTS. (2) TOTAL, (1) 9.0" L. x .312" DIA. @ TOP & (1) 9.0" L. x .312" DIA. @ BOTTOM

ALUM. RETAINING SLIDE (3) 1.0" x 4.5" x 0.565"

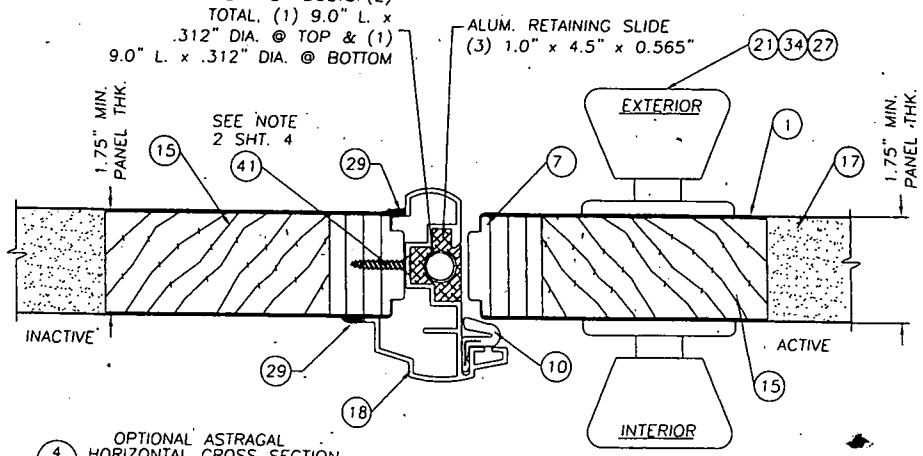

4/3 OPTIONAL ASTRAGAL HORIZONTAL CROSS SECTION AT ASTRAGAL W/ITEM #18 IMPERIAL ASTRAGAL SEE DESIGN PRESSURE RATING CHART SHEET 1

JELD-WEN, INC.
31725 HIGHWAY 97 NORTH
CHILOQUIN, OR. 97624
PH. 541.783.2057

PRODUCT: OUTSWING OPAQUE WOOD EDGE STEEL DOOR UP TO 10'7" x 6-8 UNIT
PART OR ASSEMBLY: HORIZONTAL CROSS SECTIONS

NO	DATE	REVISIONS	BY
3	10/22/02	ADDED TRINITY FRAME	ZRK
2	06/06/02	GENERAL REVISION	TJH
1	03/14/02	GENERAL REVISION	TJH

RW BUILDING CONSULTANTS, INC. 813.659.9197

PRODUCT REVISED as complying with the Florida Building Code Acceptance No. 02-1211.18 Expiration Date: 08/15/07
By: Miami Dade Product Control Division

DATE: 09/11/01
SCALE: N.T.S.
DWG. BY: TJH
CHK. BY: RW
DRAWING NO.: S-2104
SHEET 3 OF 7

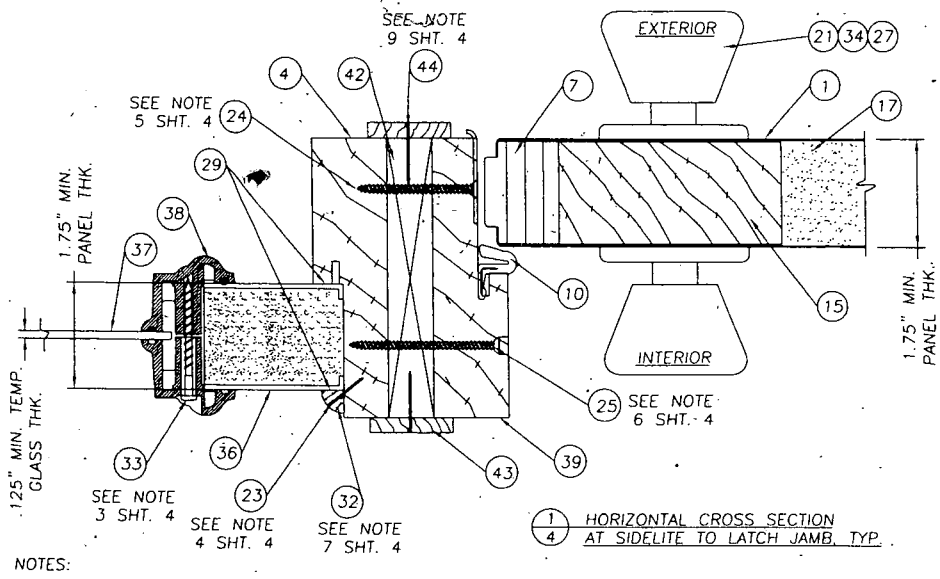

1/4 HORIZONTAL CROSS SECTION AT SIDELITE TO LATCH JAMB, TYP.

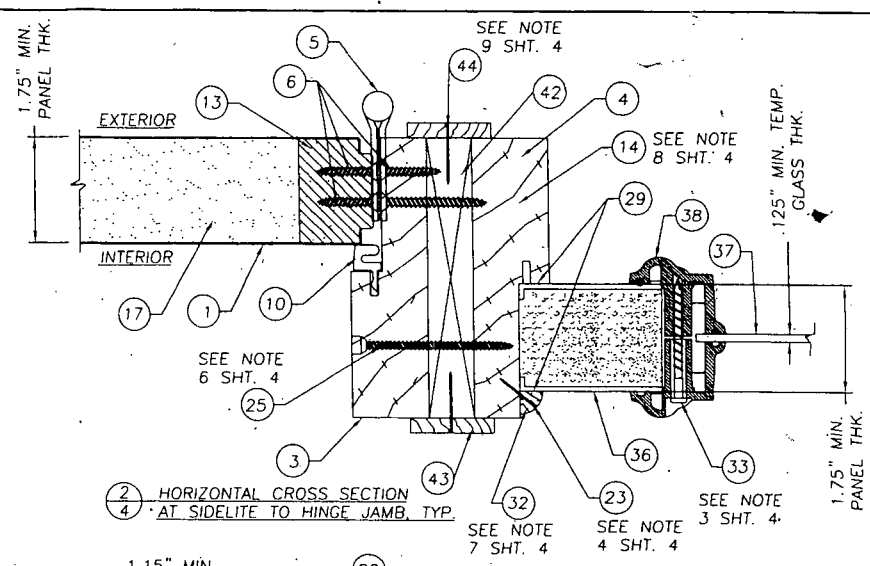

2/4 HORIZONTAL CROSS SECTION AT SIDELITE TO HINGE JAMB, TYP.

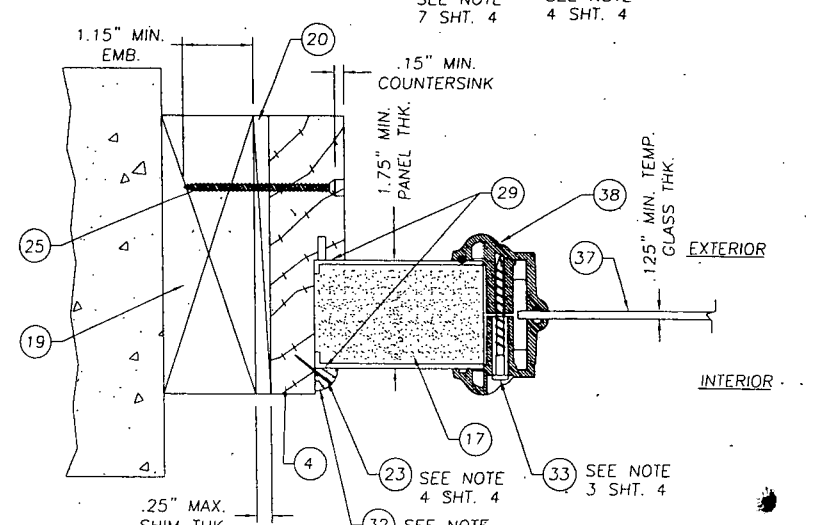

3/4 HORIZONTAL CROSS SECTION AT SIDELITE TO BUCK, TYP.

NOTES:

1. SPACING FOR #8 x 1" PFH SCREW ATTACHING THE WINDJAMBER ASTRAGAL TO THE INACTIVE DOOR IS AS FOLLOWS: TOP DOWN; 1.0", 3.0" & 5.0". FROM THE BOTTOM UP; 1.0", 3.0", 5.0", 20.0" & 38.75".
2. SPACING FOR ITEM 41 #10 x 1" PFH SCREW ATTACHING THE IMPERIAL ASTRAGAL TO THE INACTIVE DOOR IS AS FOLLOWS: FROM THE TOP DOWN & BOTTOM UP; 1.0", 2.5", 4.0", 5.5", 13.0", 18.0" & 26.0". (14 PFH SCREWS TOTAL)
3. SPACING FOR #8 x 1 1/2" PLASCREW IS AS FOLLOWS; TOP & BOTTOM; (2) SCREWS 3.0" IN FROM EACH HORIZONTAL CORNER. FROM THE TOP OF THE FRAME DOWN ON THE SIDES; 3.0", 13.0", 26.0", 39.0", 52.0" & 63.0".
4. SPACING FOR BRAD TRIM NAIL 3/4" L. ATTACHING THE QUARTER ROUND TO THE SIDELITE IS AS FOLLOWS; TOP & BOTTOM; 1.25" IN FROM EACH HORIZONTAL CORNER WITH (1) MORE NAIL IN THE MIDDLE. SIDES; 1.25" FROM EACH END & SIX MORE EQUALLY SPACED ON THE FIELD.
5. WHEN ATTACHING THE STRIKE PLATE TO THE JAMB AND BUCK USE #8 x 2 1/2" PFH WOOD SCREW. WHEN ATTACHING THE STRIKE PLATE TO THE JAMB AND SIDELITE JAMB AT THE MULLION USE #8 x 2." PFH WOOD SCREW.
6. SPACING FOR #8 x 2.5" PFH WOOD SCREW ATTACHING THE MULLIONS TOGETHER IS AS FOLLOWS; 6.0" FROM EACH VERTICAL CORNER WITH (4) MORE SCREWS EQUALLY SPACED, A TOTAL OF (6) SCREWS PER EACH VERTICAL MULLION.
7. THE SIDELITE IS SECURED INTO THE SIDELITE JAMB WITH SILICONE CAULK ON THREE SIDES & 3/8" x 3/8" [illegible]4 ROUND & BRAD TRIM NAIL x 3/4" L.
8. WHEN ATTACHING THE HINGE TO THE JAMB AND BUCK USE #10 x 2" PFH WOOD SCREW. WHEN ATTACHING THE HINGE TO THE JAMB AND SIDELITE JAMB AT THE MULLION USE #10 x 1 3/4" PFH WOOD SCREW.
9. THE MULLION CAP IS ATTACHED TO THE PRESSURE TREATED REINFOECEMENT WITH ITEM #44 A 1" TRIM NAIL SPACED A MAX. OF 12" ON CENTER.
10. SPACING FOR ITEM #50 THE #6 X 1 1/2" PANHEAD SCREW ON THE TRINITY SIDELITE FRAME IS AS FOLLOWS: FROM THE TOP DOWN ON THE SIDES (5) AT 3.25", 18.0625", 32.8125", 47.5625" & 62.625". THE TOP & BOTTOM (1) SCREW AT 4.4375".

JELD-WEN, INC.
31725 HIGHWAY 97 NORTH
CHILOQUIN, OR. 97624
PH. 541.783.2057

PRODUCT: OUTSWING OPAQUE WOOD EDGE STEEL DOOR UP TO 107" x 6-8 UNIT
PART OR ASSEMBLY: HORIZONTAL CROSS SECTIONS & NOTES

NO.	DATE	REVISIONS	BY
3	10/22/02	ADDED TRINITY FRAME	ZRK
2	06/06/02	GENERAL REVISION	TJH
1	03/14/02	GENERAL REVISION	TJH

RW BUILDING CONSULTANTS, INC. 813.659.9197

PRODUCT REVISED as complying with the Florida Building Code
Acceptance No. 02-1211.18
Expiration Date 08/15/07
By: [signature]
Miami-Dade Product Control Division

DATE: 09/11/01
SCALE: N.T.S.
DWG. BY: TJH
CHK. BY: RW
DRAWING NO.: S-2104
SHEET 4 OF 7

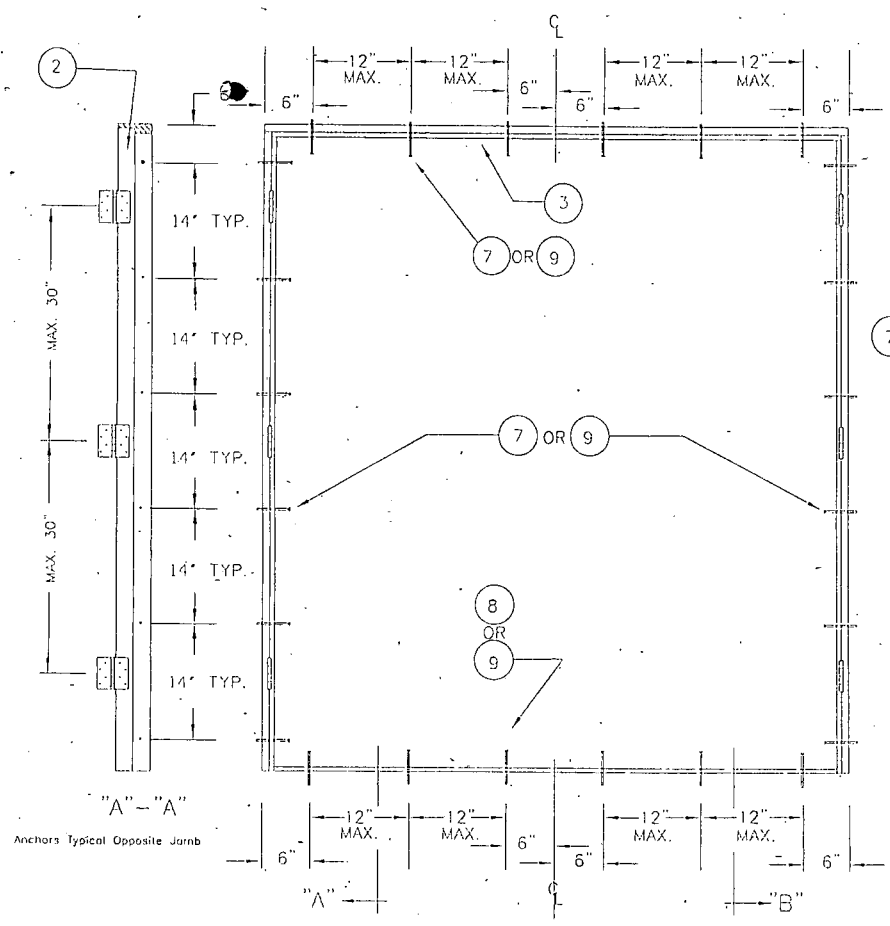

ANCHOR LOCATIONS

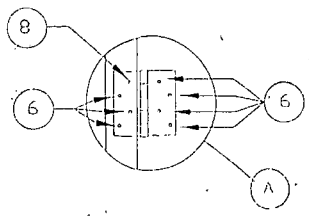

6'8" 6 PANEL DOOR VIEWED FROM EXTERIOR
(SHOWN FOR CLARITY OF VIEW)

JELD-WEN, INC.
31725 HIGHWAY 97 NORTH
CHILOQUIN, OR 97624
PH. 541.783.2057

PRODUCT: OUTSWING OPAQUE INSULATED STEEL DOUBLE DOOR IN WOOD FRAME
PART OR ASSEMBLY: DOUBLE 6'8" ANCHORS AND ELEVATIONS

NO.	DATE	REVISIONS	BY
1	10/14/02	GENERAL REVISION	KMN

RW CONSULTING (813) 684-3831

Approved as complying with the Florida Building Code
Date DEC. 19, 2002
NOA# 02-1022.14
Miami-Dade Product Control Division
By: [signature]

DATE: 9/25/00
SCALE: N.T.S.
DWG. BY: TJH
CHK BY: RW
DRAWING NO.: DC9921
SHEET 2 OF 6

JELD-WEN® STEEL

OUTSWING OPAQUE DOUBLE DOOR

WOOD EDGE INSULATED STEEL DOOR WITH WOOD FRAMES

GENERAL NOTES

1. THIS PRODUCT IS DESIGNED TO MEET THE SOUTH FLORIDA BUILDING CODE 1994 EDITION FOR MIAMI-DADE COUNTY.
2. WOOD BUCKS BY OTHERS, MUST BE ANCHORED PROPERLY TO TRANSFER LOADS TO THE STRUCTURE.
3. PRODUCT ANCHORS SHALL BE AS-LISTED AS SPACED AS SHOWN ON DETAILS. ANCHOR EMBEDMENT TO BASE MATERIAL SHALL BE BEYOND WALL FINISH OR STUCCO.
4. IMPACT RESISTANT SHUTTERS NOT REQUIRED.
5. DESIGN PRESSURE RATING SHALL BE AS FOLLOWS:
   - FOR 6'8" WOOD FRAMES: SEE TABLE THIS SHEET
   - FOR 8'0" WOOD FRAMES: SEE TABLE THIS SHEET
6. ALL DIMENSIONS ARE GIVEN IN INCHES UNLESS OTHERWISE SHOWN.

OUTSWING INSULATED STEEL DOOR
(Common to all frame conditions)

Door Leaf Construction:

Face sheets: 24 ga. (0.020") minimum thickness, Galvanized steel A-525 commercial quality - AKDO per ASTM 620 with yield strength Fy(min.)=24,600 psi.

Core design: Expanded polystyrene with 1.0 to 1.25 lbs. density.

Construction: steel face sheets glued to expanded polystyrene (EPS), with wood rails and Laminated Veneered Lumber stiles and a wood lock block reinforcement.

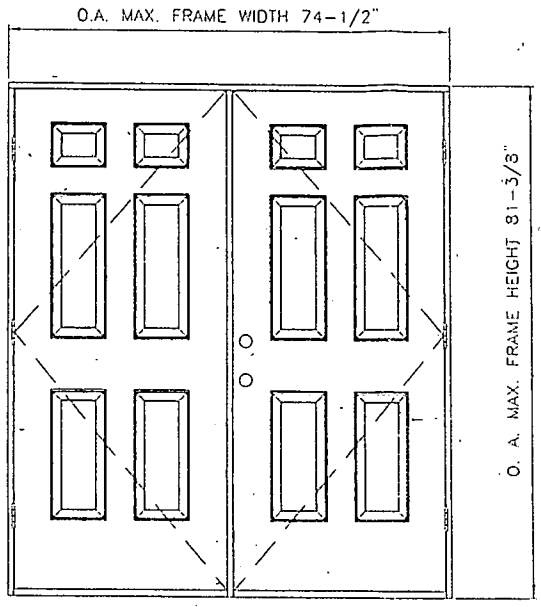

6'-8" HEIGHT

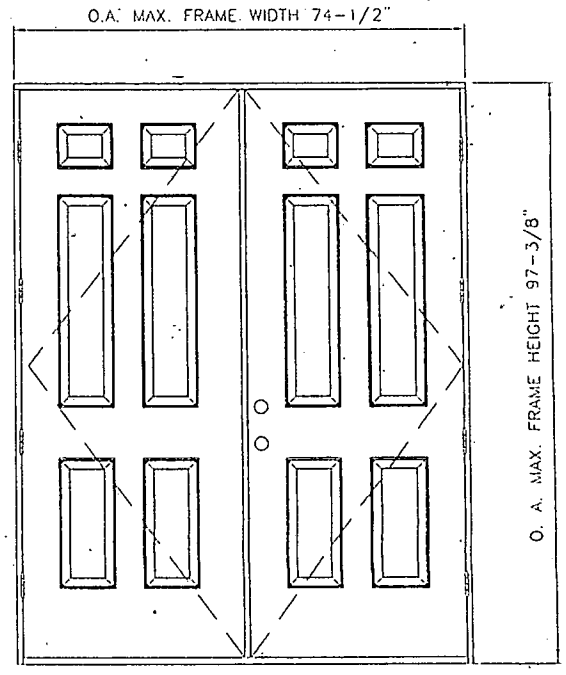

8'-0" HEIGHT

COLONIAL 6 PANEL DOOR
VIEWED FROM EXTERIOR
(SHOWN FOR CLARITY OF VIEW)

TABLE OF CONTENTS

SHEET #	DESCRIPTION
1	COMMON (GENERAL NOTES, TYPICAL ELEVATION)
2	DOUBLE 6'8" WOOD FRAME (ANCHORS, ELEVATION)
3	DOUBLE 8'0" WOOD FRAME (ANCHORS, ELEVATION)
4	DOUBLE DOOR HORIZONTAL CROSS SECTIONS
5	DOUBLE DOOR VERT. CROSS SECTIONS (BILL OF MATERIALS)
6	COMMON (DOOR MODELS, LOCK DETAILS)

DESIGN PRESSURE RATING

	WHERE WATER INFILTRATION REQUIREMENT IS NEEDED	WHERE WATER INFILTRATION REQUIREMENT IS NOT NEEDED
POSITIVE	+ 48.0 psf	+ 48.0 psf
NEGATIVE	- 51.0 psf	- 51.0 psf

Approved as complying with the Florida Building Code
Date DEC. 19, 2002
NOA# 02-1022.14
Miami Dade Product Control Division
By Manuel Perez

JELD-WEN, INC.
31725 HIGHWAY 97 NORTH
CHILOQUIN, OR 97624
PH. 541.783.2057

PRODUCT: OUTSWING OPAQUE INSULATED STEEL DOUBLE DOOR IN WOOD FRAME

PART OR ASSEMBLY: ELEVATIONS AND GENERAL NOTES

NO	DATE	REVISIONS	BY
1	10/14/02	GENERAL REVISION	KMN

RW CONSULTING (813) 684-3831

DATE: 9/25/00
SCALE: N.T.S.
DWG. BY: TJH
CHK. BY: RW
DRAWING NO.: DC9921
SHEET 1 OF 6

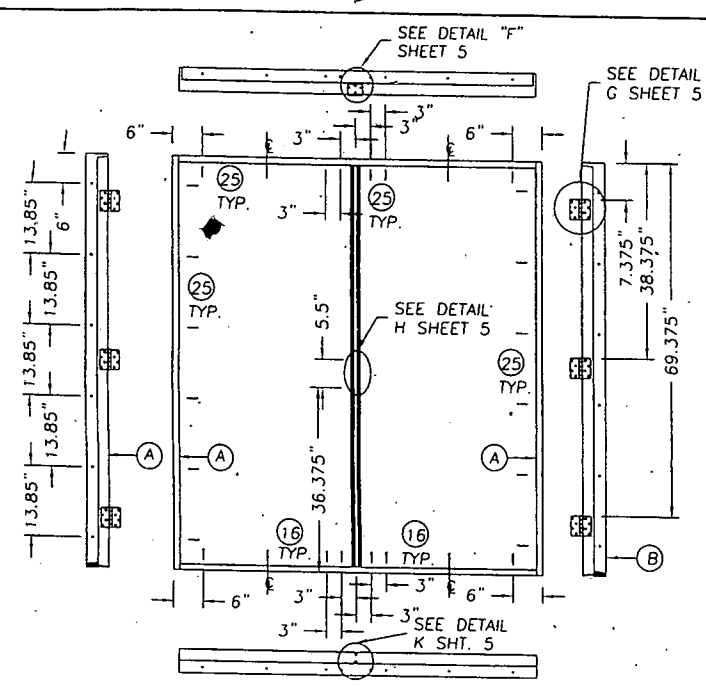

DOUBLE DOOR ANCHORING LOCATIONS

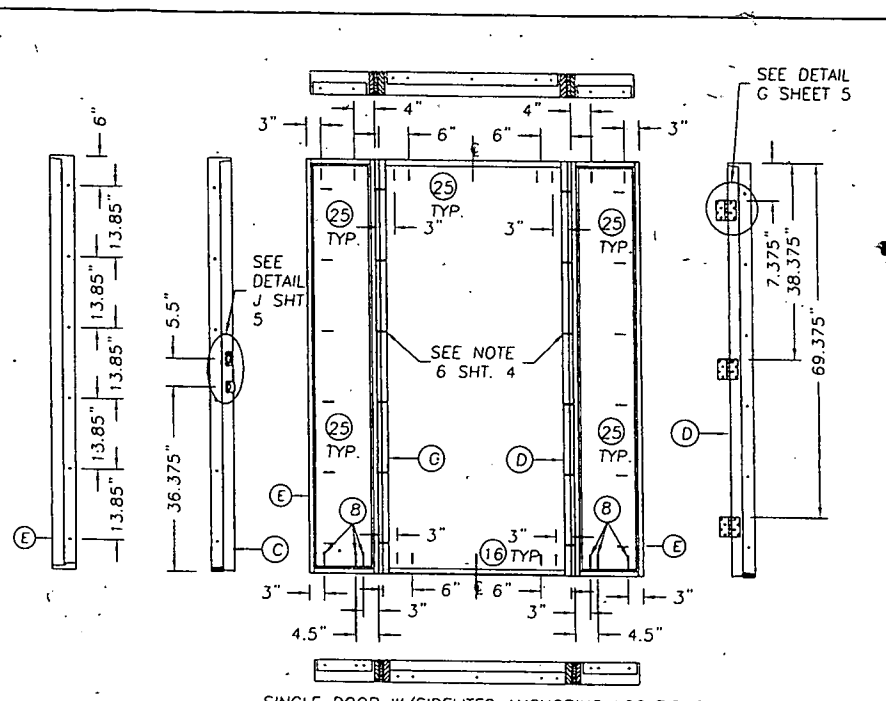

SINGLE DOOR W/SIDELITES ANCHORING LOCATIONS

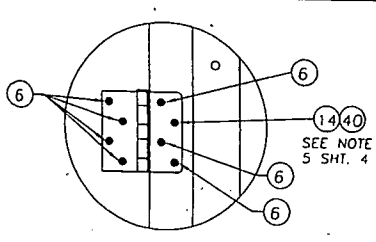

DETAIL G HINGE
TO JAMBS & DOOR
SEE NOTE 5 SHT. 4

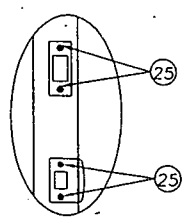

DETAIL H STRIKE
PLATES TO WINDJAMER ASTRAGAL

ASTRAGAL RETAINER BOLT HOLES MUST BE DRILLED THROUGH THE THRESHOLD & INTO THE MASONRY DEEP ENOUGH FOR A 2" THROW

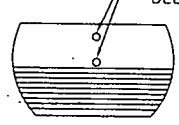

DETAIL K SILL
WINDJAMBER ASTRAGAL
RETAINER BOLT HOLES

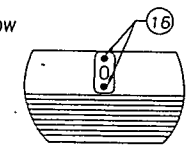

OPTIONAL DETAIL K SILL
IMPERIAL ASTRAGAL
RETAINER BOLT THRESHOLD
STRIKE PLATE

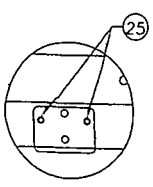

DETAIL F HEADER
WINDJAMBER ASTRAGAL
RETAINER BOLTS HEADER
STRIKE PLATE

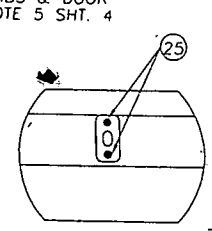

OPTIONAL DETAIL F HEADER
IMPERIAL ASTRAGAL
RETAINER BOLT HEADER
STRIKE PLATE

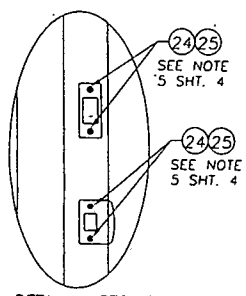

DETAIL J STRIKE
PLATES TO JAMBS
SEE NOTE 5 SHT. 4

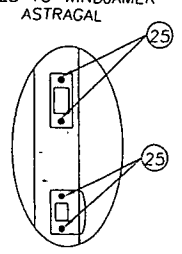

OPTIONAL DETAIL H STRIKE
PLATES TO IMPERIAL ASTRAGAL

PRODUCT REVISED as complying with the Florida Building Code
Acceptance No. 02-1211.16
Expiration Date 08/15/07
By: Miami Dade Product Control Division

PRODUCT: OUTSWING OPAQUE WOOD EDGE STEEL DOOR UP TO 107"x 6-8 UNIT

PART OR ASSEMBLY: ANCHORING LOCATIONS & DETAILS

NO	DATE	REVISIONS	BY
3	10/22/02	ADDED TRINITY FRAME	ZRK
2	06/06/02	GENERAL REVISION	TJH
1	03/14/02	GENERAL REVISION.	TJH

RW BUILDING CONSULTANTS, INC. 813.659.9197

DATE: 09/11/01
SCALE: N.T.S.
DWG. BY: TJH
CHK. BY: RW
DRAWING NO.: S-2104
SHEET 5 OF 7

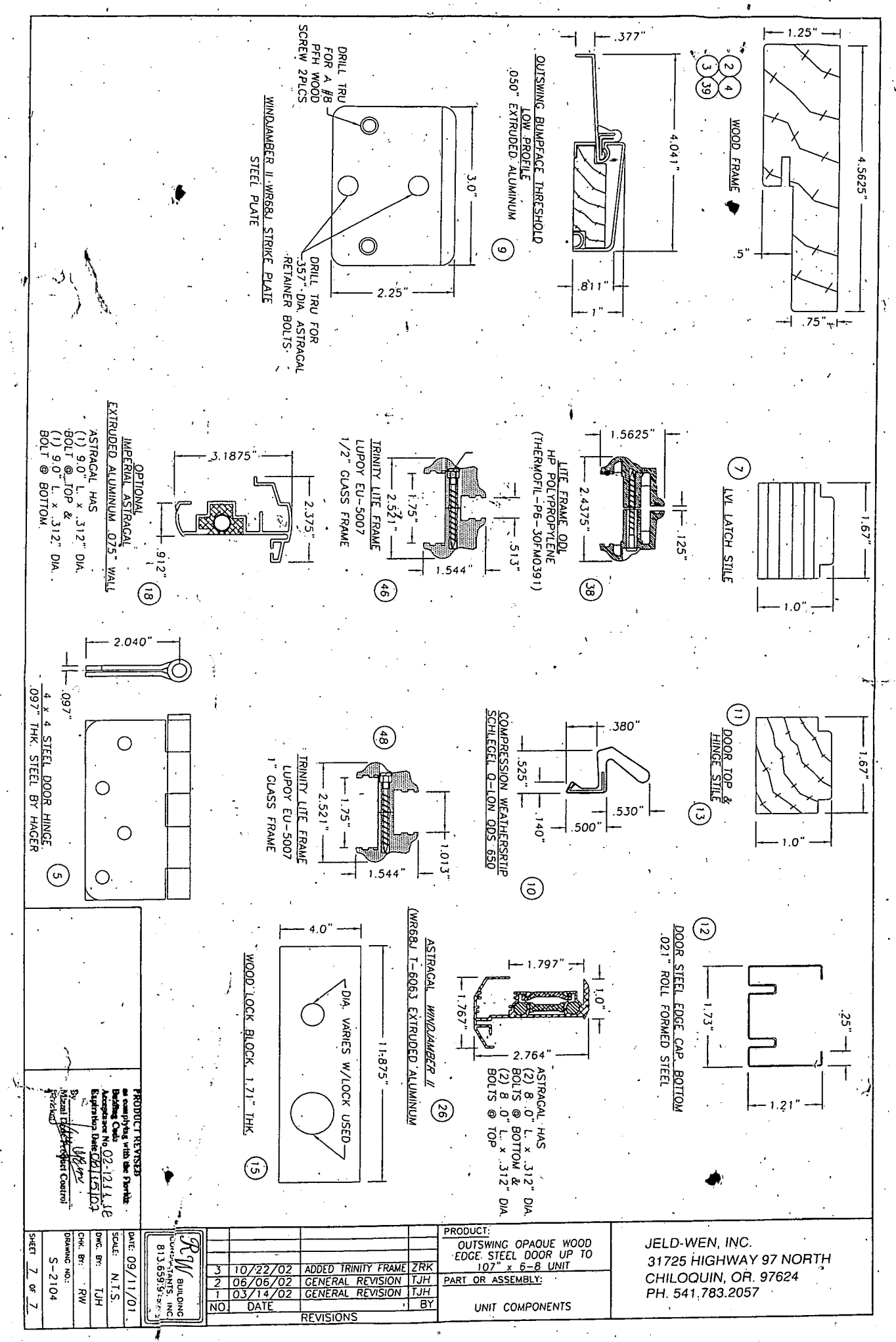

JELD-WEN®
WINDOWS & DOORS

OFFICE COPY
CITY OF MIAMI SPRINGS

HURRICANE DOOR SYSTEMS
SISTEMA PARA PUERTAS HURACANES

Contains Acceptance No. 02-1022.14
Expires 12/02/2007
Contains Acceptance No. 02-1211.10
Expires 07/17/2008
Contains Acceptance No. 02-1211.18
Expires 08/15/2007

For a complete listing of JELD-WEN Hurricane Door Systems
Visit our website at www.jeld-wenresearch.com

Notice of Acceptance and Approval/Installation Drawings Save for Builder and Inspector

DADE
THD-18006

SB 3-03

MIAMI-DADE

BUILDING CODE COMPLIANCE OFFICE (BCCO)
PRODUCT CONTROL DIVISION

MIAMI-DADE COUNTY, FLORIDA
METRO-DADE FLAGLER BUILDING
140 WEST FLAGLER STREET, SUITE 1603
MIAMI, FLORIDA 33130-1563
(305) 375-2901 FAX (305) 375-2908

NOTICE OF ACCEPTANCE (NOA)

Jeld-Wen, Inc.
31725 Highway 97 North.
Chiloquin, OR 97624

SCOPE:
This NOA is being issued under the applicable rules and regulations governing the use of construction materials. The documentation submitted has been reviewed by Miami-Dade County Product Control Division and accepted by the Board of Rules and Appeals (BORA) to be used in Miami Dade County and other areas where allowed by the Authority Having Jurisdiction (AHJ).

This NOA shall not be valid after the expiration date stated below. The Miami-Dade County Product Control Division (In Miami Dade County) and/or the AHJ (in areas other than Miami Dade County) reserve the right to have this product or material tested for quality assurance purposes. If this product or material fails to perform in the accepted manner, the manufacturer will incur the expense of such testing and the AHJ may immediately revoke, modify, or suspend the use of such product or material within their jurisdiction. BORA reserves the right to revoke this acceptance, if it is determined by Miami-Dade County Product Control Division that this product or material fails to meet the requirements of the applicable building code.
This product is approved as described herein, and has been designed to comply with the High Velocity Hurricane Zone of the Florida Building Code.

DESCRIPTION: Series Jeld-Wen® Steel W/E Outswing Opaque Insulated Steel Doors

APPROVAL DOCUMENT: Drawing No. **DC9921**, titled "Outswing Opaque Insulated Steel Double Door in Wood Frame", sheets 1 through 6 of 6, prepared by R.W. Consulting, Inc., dated 9/25/00 with revision No: 1 dated 10/14/02, bearing the Miami-Dade County Product Control Revision stamp with the Notice of Acceptance number and expiration date by the Miami-Dade County Product Control Division.

MISSILE IMPACT RATING: Large and Small Missile Impact

LABELING: Each unit shall bear a permanent label with the manufacturer's name or logo, city, state and following statement: "Miami-Dade County Product Control Approved", unless otherwise noted herein.

RENEWAL of this NOA shall be considered after a renewal application has been filed and there has been no change in the applicable building code negatively affecting the performance of this product.

TERMINATION of this NOA will occur after the expiration date or if there has been a revision or change in the materials, use, and/or manufacture of the product or process. Misuse of this NOA as an endorsement of any product, for sales, advertising or any other purposes shall automatically terminate this NOA. Failure to comply with any section of this NOA shall be cause for termination and removal of NOA.

ADVERTISEMENT: The NOA number preceded by the words Miami-Dade County, Florida, and followed by the expiration date may be displayed in advertising literature. If any portion of the NOA is displayed, then it shall be done in its entirety.

INSPECTION: A copy of this entire NOA shall be provided to the user by the manufacturer or its distributors and shall be available for inspection at the job site at the request of the Building Official.
This NOA **revises and renews NOA # 00-1003.04** and consists of this page 1 as well as approval document mentioned above.
The submitted documentation was reviewed by **Manuel Perez, P.E.**

NOA No 02-1022.14
Expiration Date: December 02, 2007
Approval Date: December 19, 2002
Page 1

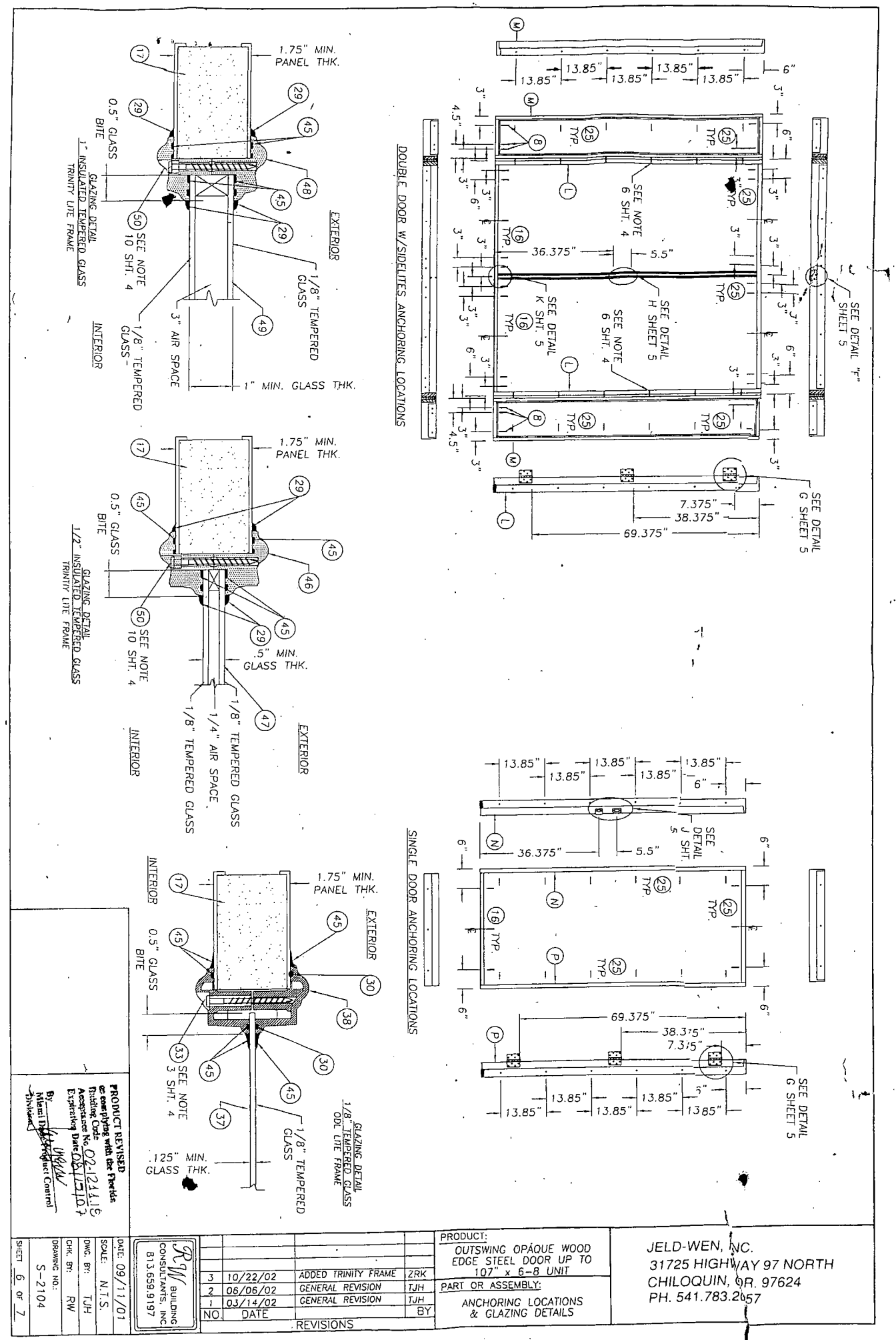

C I T Y O F M I A M I S P R I N G S

201 Westward Drive
Miami Springs, Florida 33166
(305) 805-5030

M I S C E L L A N E O U S P E R M I T

Application Number . . . . . 04-00000606 Date 4/02/04
Pin number 269636
Property Address . . . . . 200 ESPLANADE DRIVE
FOLIO NUMBER: 05-3118-016-1590
Old Customer Account No.: 1061310057
Application description . . . CONCRETE SLABS
Property Zoning . . . . . UPDATE
Application valuation 500

Owner	Contractor
DIAZ, ALAN & MARTHA	OWNER
200 ESPLANADE DRIVE	
MIAMI SPRINGS FL 33166	

------ Structure Information SLAB -----
Other struct info . . . . . RESIDENTIAL ? YES
COMMERCIAL ? BNO

Permit . . . . . MISCELLANEOUS
Additional desc . .
Permit Fee . . . . 54.00 Plan Check Fee . . .00
Issue Date . . . . 4/02/04 Valuation 0
Expiration Date . . 9/29/04

Qty	Unit Charge	Per		Extension
360.00	.1500	SF	BLD CONCRETE PATIOS	54.00

Other Fees . . . . . CODE COMPLIANCE FEE .60

Fee summary	Charged	Paid	Credited	Due
Permit Fee Total	54.00	54.00	.00	.00
Plan Check Total	.00	.00	.00	.00
Other Fee Total	.60	.60	.00	.00
Grand Total	54.60	54.60	.00	.00

All inspection requests must be scheduled 24 hours prior to inspections. Please call (305) 805-5030 between 8:00 AM and 4:00 PM for scheduling. No inspection requests will be accepted after 4:00 PM.

CITY OF MIAMI SPRINGS PERMIT APPLICATION

DATE: 3-26-04 ✓ PERMIT: 04-606

SQUARE FOOTAGE: 360 ✓ ESTIMATED COST: 500.00 ✓

Type of Permit: ( ) Building ( ) Plumbing ( ) Electrical ( ) Mechanical ( ) Roofing ( ) Sign (X) Misc

Owner's Name ALAN DIAZ & MARTA DIAZ Phone 305-898-4219 ✓

Owner's Address 200 N. ESPLANADE DR

City MIAMI SPRINGS State FLORIDA Zip 33166

Fee Simple Titleholder's Name (if other than owner) _____

Fee Simple Titleholder's Address (if other than owner's) _____

City _____ State _____ Zip _____

Contractor's Name _____ Phone _____

Contractor's Address _____

City _____ State _____ Zip _____

Contractor's License No. (County) _____

Job Address 200 N. ESPLANADE DR. ✓

City MIAMI SPRINGS FL 33166

Legal Description (incl Folio #) _____

Bonding Company _____

Bonding Company Address _____

City _____ State _____ Zip _____

Architect/Engineer's Name _____ Phone _____

Architect Company Address _____

City _____ State _____ Zip _____

Mortgage Lender's Name _____

Mortgage Lender's Address _____

City _____ State _____ Zip _____

RECEIVED
04 MAR 26 PM 1:31
CITY OF MIAMI SPRINGS
BUILDING DEPARTMENT

WORK DESCRIPTION: 4" concrete SLAB 30' x 12' ✓

Application is hereby made to obtain a permit to do the work and installations as indicated. I certify that no work or installation has commenced prior to the issuance of a permit and that all work will be performed to meet the standards of all laws regulating construction in this jurisdiction. I understand that a separate permit must be secured of ELECTRICAL WORK PLUMBING, SIGNS, WELLS, POOLS, FURNACES, BOILERS, HEATERS, TANKS, and AIR CONDITIONING, ETC.

Owner's Affidavit: I certify that all the foregoing information is accurate and that work will be done in compliance with all applicable laws regulating construction and zoning.

WARNING TO OWNER: YOUR FAILURE TO RECORD A NOTICE OF COMMENCEMENT MAY RESULT IN YOUR PAYING TWICE FOR IMPROVEMENTS TO YOUR PROPERTY. IF YOU INTEND TO OBTAIN FINANCING, CONSULT WITH YOUR LENDER OR AN ATTORNEY BEFORE RECORDING YOUR NOTICE OF COMMENCEMENT.

Signature _____
Owner

Sworn to and subscribed before me by
MARTHA CASAS
who is personally known to me or produced
FIDL C220-555-53-681-0
as identification, this 26 day of MARCH
20 04.
Notary's Signature _____
Printed Name of Notary MARIA TEDESCO

Maria Tedesco
My Commission DD198558
Expires March 31, 2007

Signature _____
Contractor
Sworn to and Subscribed before me by
_____
who is personally known to me or produced
_____
as identification, this _____ day of _____
20 _____.
Notary's Signature _____
Printed Name of Notary _____

APPROVAL: Building _____ Structual _____ Electrical _____ Plumbing _____ Mechanical _____

3/24/04

PLUMBING

BATH TUB
BIDET
DISHWASHER
BACK FLOW PREVENTOR
FLOOR DRAIN
GREASE TRAP
INTERCEPTOR
LAVATORY
CLOTHES WASHER
SHOWER
SINK, POT/3 COMP
SINK, RESIDENCE
SINK, SLOP
TEMP WATER CLOSET
URINAL
WATER CLOSET
INDIRECT WASTES
WATER SUPPLY TO:
AIR COND UNIT
FIRE SPRINKLER
HEATER - NEW
HEATER - REPLACE
LAWN SPRINKLER
SWIMMING POOL
WATER SERVICE
SEWER CONNECTION
UTILITY - SEWER
UTILITY - WATER
SOAKAGE PIT (CF)
CATCH BASIN
DISCHARGE WELL
SPRINKLER WELL
AREA DRAIN
ROOF INLET
SOLAR WTR HTR
FIRE STANDPIPE
POOL PIPING
LAWN SPRINKLER
GAS RANGE
GAS METER SET
GAS PIPING OUTLET
REPAIR
OTHER

ELECTRICAL

AIR COND (CENTRAL)
BURGLAR ALARM
ALARM (DEVICES)
CLOTHES DRYER
DISHWASHER
FANS (PERMANENT)
FIRE ALARM
INTERCOM
LAMPS/FIXTURES
MOTORS (LIST BELOW)
METER RE-CONNECT
OUTLETS
RANGE
REFRIGERATOR
REPAIRS (LIST BELOW)
ROUGH OUTLETS
SERVICE CAPACITY
SIGN (TYPE)
SMOKE DETECTORS
SPECIAL PURPOSE OUTLET
STRIP HEATER (KW)
SUB FEEDS
SWIMMING POOL
TEMP FOR TEST
TEMP SERVICE
TRASH COMPACTOR
WATER HEATER
OTHER

BUILDING

AWNINGS
DOORS
GATES
SHUTTERS
WINDOWS
ADDITIONS (SF)
SWIM POOL (SF)
RETAIN WALL (LF)
SCREEN ENCL (SF)
WOOD DECK (SF)
AC SCREENS (LF)
IRON GRILLES (SF)
DEMO (SF)
PAVING (SF)
CANOPIES (SF)
FENCE (CH LINK) (LF)
FENCE (WOOD) (LF)
FENCE (IRON) (LF)
REMODEL (SF)
OTHER

MECHANICAL

CENTRAL A/C SYSTEM
DUCT WORK (DROPS)
AIR OR REFRIG COMPRESSOR
0 - 5 TON
5 - 10 TON
10 - 25 TON
OVER 25 TON
CONDENSATE LINE
AIR COMP. OUTLETS
STRIP HEATER (KW)
VENTILATORS
BOILERS
STEAM OPENINGS
ELEVATORS
OF LANDINGS
WALL TYPE HEATER
SOLAR HEATER
VACUUM SYSTEM
DRAINAGE PIT
TYPE OF DUCT WORK
OTHER

ROOFING

NEW ROOF
RE-ROOF
REPAIR
ZONING TYPE:
COMMERCIAL
RESIDENTIAL
ROOF MATERIAL & QUANTITY
BUILT UP # OF SQ:
SHINGLE # OF SQ:
TILE # OF SQ:
MATERIAL TYPE:
BUILT UP TYPE
SHINGLE TYPE
TILE TYPE
OTHER

SIGNS

NEW SIGN
CHANGE EXISTING
CHANGE OF FACE
DOUBLE FACE
POLE SIGN
WALL SIGN
SINGLE FACE
DIRECTIONAL
ADVERTISEMENT
CONSTRUCTION
OTHER

SKETCH OF SURVEY

SCALE 1" = 20'

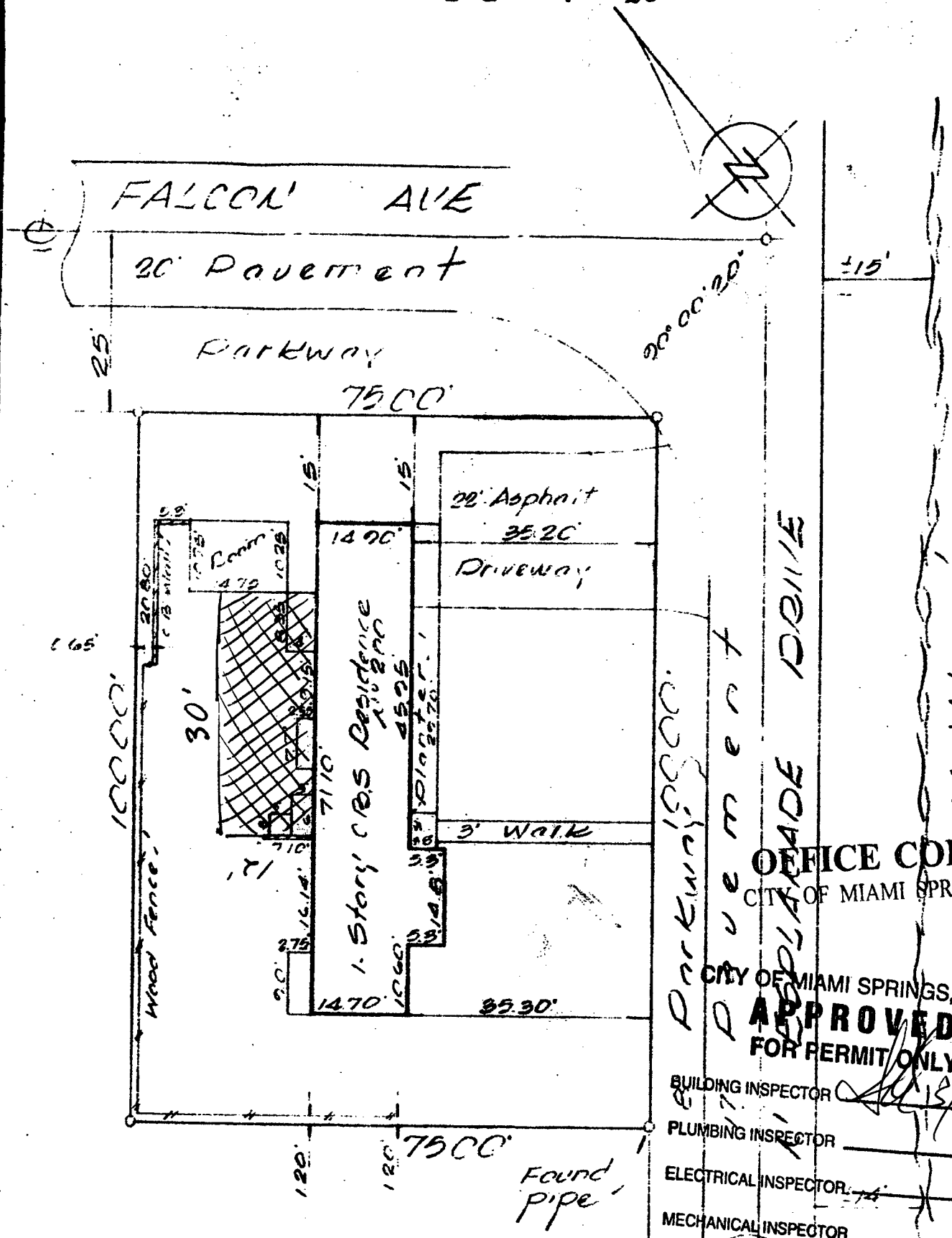

OFFICE COPY
CITY OF MIAMI SPRINGS

CITY OF MIAMI SPRINGS, FLA.
APPROVED
FOR PERMIT ONLY

BUILDING INSPECTOR 5/29/04
PLUMBING INSPECTOR
ELECTRICAL INSPECTOR
MECHANICAL INSPECTOR
ZONING
STRUCTURAL

CITY OF MIAMI SPRINGS

201 Westward Drive
Miami Springs, Florida 33166
(305) 805-5030

BUILDING PERMIT

Application Number . . . . . 04-00000686 Date 4/20/04
Pin number 970902
Property Address . . . . . 200 ESPLANADE DRIVE
FOLIO NUMBER: 05-3118-016-1590
Application description . . . ADDITION OF CARPORT OR GARAGE
Subdivision Name . . . . . .
Property Use . . . . . .
Property Zoning . . . . . UPDATE
Application valuation 4320

Owner	Contractor
DIAZ, ALAN & MARTHA	OWNER
200 ESPLANADE DRIVE	
MIAMI SPRINGS FL 33166	

------ Structure Information ALUMINUN ROOF AND CBS SLAB -----

Construction Type . . . . . ALUMINUM
Other struct info . . . . . % REAR/YARD ACCY BLDG 1.00
TOTAL SQUARE FOOTAGE 432.00
MASTER ? YES
SUBSIDIARY ? NO
RESIDENTIAL ? YES

Permit . . . . . BUILDING PERMIT
Additional desc . .
Sub Contractor . . DL ALUMINUM
Permit Fee . . . . 73.50 Plan Check Fee . . .00
Issue Date . . . . 4/20/04 Valuation 4320
Expiration Date . . 10/17/04

Qty	Unit Charge	Per		Extension
420.00	.1500	SF	BLD CANOPIES	63.00
70.00	.1500	SF	BLD CONCRETE PATIOS	10.50

Other Fees . . . . . CODE COMPLIANCE FEE 3.00
STRUCTURAL PROCESSING FEE 50.00

Fee summary	Charged	Paid	Credited	Due
Permit Fee Total	73.50	73.50	.00	.00
Plan Check Total	.00	.00	.00	.00
Other Fee Total	53.00	53.00	.00	.00
Grand Total	126.50	126.50	.00	.00

All inspection requests must be scheduled 24 hours prior to inspections. Please call (305) 805-5030 between 8:00 AM and 4:00 PM. No inspection requests will be accepted after 4:00 PM.

SEPERATE PERMITS REQUIRED FOR ALL TRADES

CITY OF MIAMI SPRINGS PERMIT APPLICATION

DATE: 04-19-04 PERMIT: 04-686

SQUARE FOOTAGE: 432 ESTIMATED COST: 4320 00

Type of Permit: ( ) Building ( ) Plumbing ( ) Electrical ( ) Mechanical ( ) Roofing ( ) Sign (X) Misc

Owner's Name Alan y Martha Diaz Phone (305) 888-4219
Owner's Address 200 N Esplanade Drive
City Miami Springs State Florida Zip 33166

Fee Simple Titleholder's Name (if other than owner) _____
Fee Simple Titleholder's Address (if other than owner's) _____
City _____ State _____ Zip _____

Contractor's Name D.L. Aluminum Phone (305) 551-0720
Contractor's Address 112 N NW 2 terrace
City Miami State Flo. Zip 33172
Contractor's License No. (County) CCC-98BS00286

Job Address 200 N Esplanade Drive
City Miami Springs
Legal Description (incl Folio #) 04-3118-016-1590

RECEIVED
04 APR 19 AM 11:10
CITY OF MIAMI SPRINGS
BUILDING DEPARTMENT

Bonding Company _____
Bonding Company Address _____
City _____ State _____ Zip _____

Architect/Engineer's Name Ramos Engineering Phone (305) 822-3141
Architect Company Address 2100 W 76. st Suite # 311
City Hialeah State Flo. Zip 33016

Mortgage Lender's Name _____
Mortgage Lender's Address _____
City _____ State _____ Zip _____

WORK DESCRIPTION: Aluminum Roof ons Screen @ door: 36x80
Concrete y Pulpm.

Application is hereby made to obtain a permit to do the work and installations as indicated. I certify that no work or installation has commenced prior to the issuance of a permit and that all work will be performed to meet the standards of all laws regulating construction in this jurisdiction. I understand that a separate permit must be secured of ELECTRICAL WORK PLUMBING, SIGNS, WELLS, POOLS, FURNACES, BOILERS, HEATERS, TANKS, and AIR CONDITIONING, ETC.

Owner's Affidavit: I certify that all the foregoing information is accurate and that work will be done in compliance with all applicable laws regulating construction and zoning.

WARNING TO OWNER: YOUR FAILURE TO RECORD A NOTICE OF COMMENCEMENT MAY RESULT IN YOUR PAYING TWICE FOR IMPROVEMENTS TO YOUR PROPERTY. IF YOU INTEND TO OBTAIN FINANCING, CONSULT WITH YOUR LENDER OR AN ATTORNEY BEFORE RECORDING YOUR NOTICE OF COMMENCEMENT.

Signature _____ (Owner)
Sworn to and subscribed before me by MARTHA PASTORA CASAS
who is personally known to me or produced FIDL C220-595-53-600
as identification, this 19 day of APRIL 20 04.
Notary's Signature _____
Printed Name of Notary MARIA TEDESCO

Maria Tedesco
My Commission DD198558
Expires March 31 2007

Signature _____ (Contractor)
Sworn to and Subscribed before me by Delvis A. Lazo
who is personally known to me or produced L200-101-62-165-0
as identification, this ____ day of ____ 20 04.
Notary's Signature _____
Printed Name of Notary Lourdes Tavera

APPROVAL: Building _____ Structual _____ Electrical _____ Plumbing _____ Mechanical _____
4/20/04 4/19/04

PLUMBING

BATH TUB
BIDET
DISHWASHER
BACK FLOW PREVENTOR
FLOOR DRAIN
GREASE TRAP
INTERCEPTOR
LAVATORY
CLOTHES WASHER
SHOWER
SINK, POT/3 COMP
SINK, RESIDENCE
SINK, SLOP
TEMP WATER CLOSET
URINAL
WATER CLOSET
INDIRECT WASTES
WATER SUPPLY TO:
AIR COND UNIT
FIRE SPRINKLER
HEATER - NEW
HEATER - REPLACE
LAWN SPRINKLER
SWIMMING POOL
WATER SERVICE
SEWER CONNECTION
UTILITY - SEWER
UTILITY - WATER
SOAKAGE PIT (CF)
CATCH BASIN
DISCHARGE WELL
SPRINKLER WELL
AREA DRAIN
ROOF INLET
SOLAR WTR HTR
FIRE STANDPIPE
POOL PIPING
LAWN SPRINKLER
GAS RANGE
GAS METER SET
GAS PIPING OUTLET
REPAIR
OTHER

ELECTRICAL

AIR COND (CENTRAL)
BURGLAR ALARM
ALARM (DEVICES)
CLOTHES DRYER
DISHWASHER
FANS (PERMANENT)
FIRE ALARM
INTERCOM
LAMPS/FIXTURES
MOTORS (LIST BELOW)
METER RE-CONNECT
OUTLETS
RANGE
REFRIGERATOR
REPAIRS (LIST BELOW)
ROUGH OUTLETS
SERVICE CAPACITY
SIGN (TYPE)
SMOKE DETECTORS
SPECIAL PURPOSE OUTLET
STRIP HEATER (KW)
SUB FEEDS
SWIMMING POOL
TEMP FOR TEST
TEMP SERVICE
TRASH COMPACTOR
WATER HEATER
OTHER

BUILDING

AWNINGS
DOORS
GATES
SHUTTERS
WINDOWS
ADDITIONS (SF)
SWIM POOL (SF)
RETAIN WALL (LF)
SCREEN ENCL (SF)
WOOD DECK (SF)
AC SCREENS (LF)
IRON GRILLES (SF)
DEMO (SF)
PAVING (SF)
CANOPIES (SF)
FENCE (CH LINK) (LF)
FENCE (WOOD) (LF)
FENCE (IRON) (LF)
REMODEL (SF)
OTHER

MECHANICAL

CENTRAL A/C SYSTEM
DUCT WORK (DROPS)
AIR OR REFRIG COMPRESSOR
0 - 5 TON
5 - 10 TON
10 - 25 TON
OVER 25 TON
CONDENSATE LINE
AIR COMP. OUTLETS
STRIP HEATER (KW)
VENTILATORS
BOILERS
STEAM OPENINGS
ELEVATORS
OF LANDINGS
WALL TYPE HEATER
SOLAR HEATER
VACUUM SYSTEM
DRAINAGE PIT
TYPE OF DUCT WORK
OTHER

ROOFING

NEW ROOF
RE-ROOF
REPAIR
ZONING TYPE:
COMMERCIAL
RESIDENTIAL
ROOF MATERIAL & QUANTITY
BUILT UP # OF SQ:
SHINGLE # OF SQ:
TILE # OF SQ:
MATERIAL TYPE:
BUILT UP TYPE
SHINGLE TYPE
TILE TYPE
OTHER

SIGNS

NEW SIGN
CHANGE EXISTING
CHANGE OF FACE
DOUBLE FACE
POLE SIGN
WALL SIGN
SINGLE FACE
DIRECTIONAL
ADVERTISEMENT
CONSTRUCTION
OTHER

PERMIT ROUTING FORM

DATE APPLICATION RECEIVED 4/19/04

PERMIT NUMBER 04-686

JOB NAME: DIAZ

JOB ADDRESS: 200 NO. ESPLANADE DR.

CONTRACTOR: D.L. Alum.

REVIEW	REVIEW REQUIRED	APPROVED	DISAPPROVED
ZONING			
ELECTRICAL			
PLUMBING			
MECHANICAL			
STRUCTURAL		MBL 4/19/04	
BUILDING		4/20/04	

SKETCH OF SURVEY

SCALE 1" = 20'

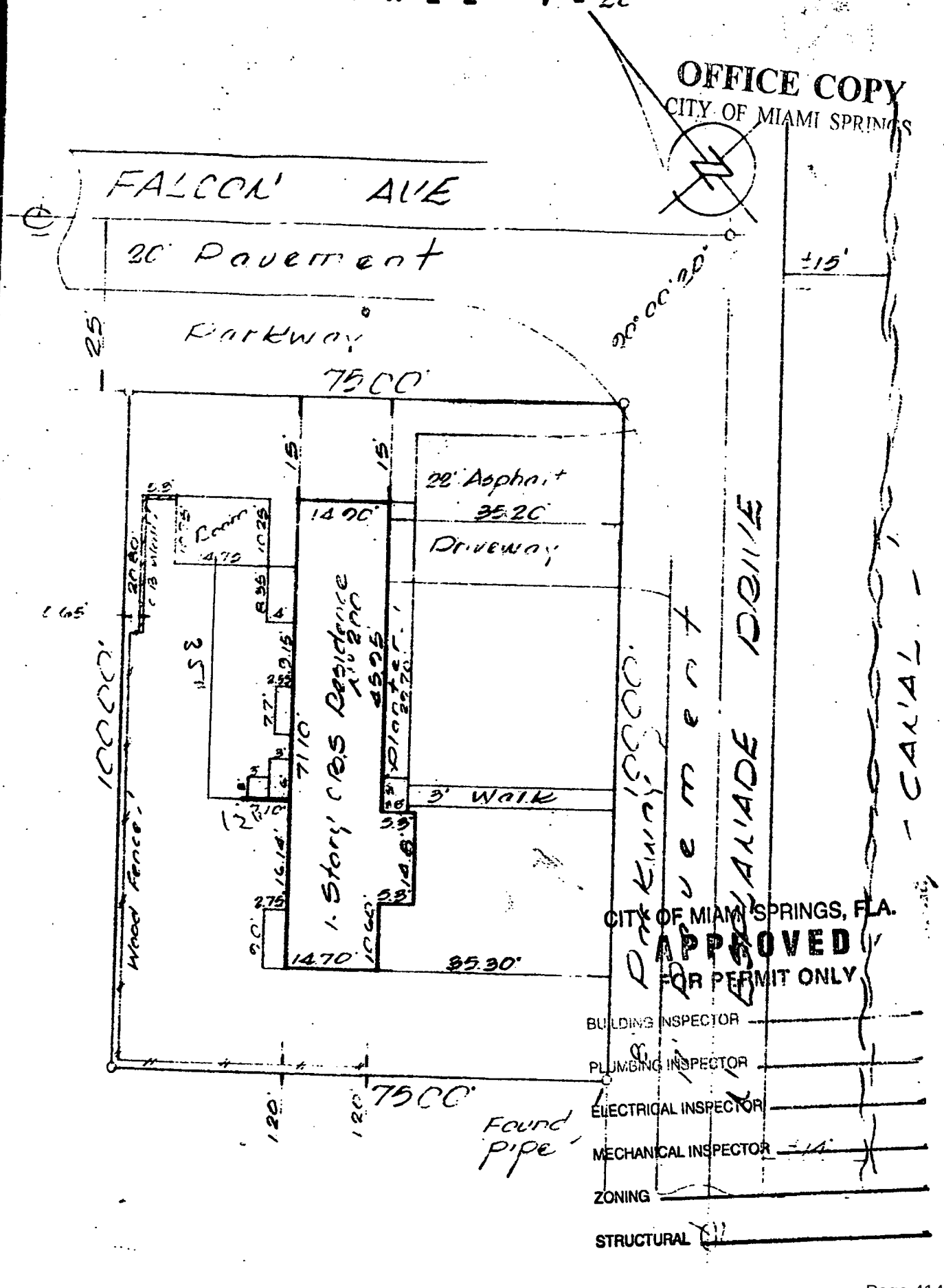

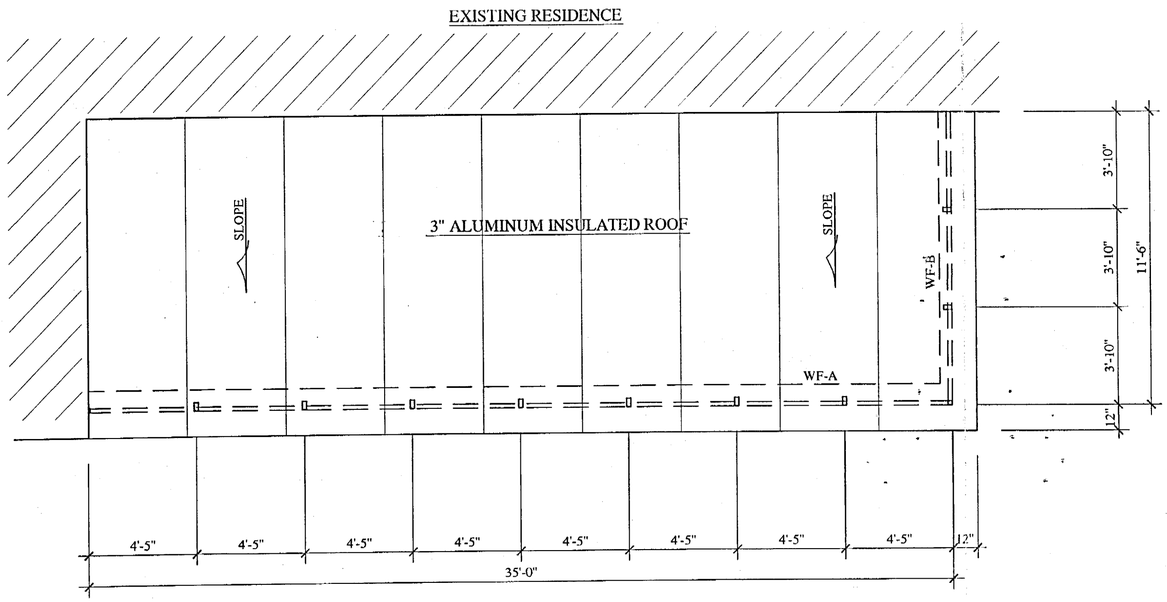

TOP VIEW 1/4" : 1'-0"

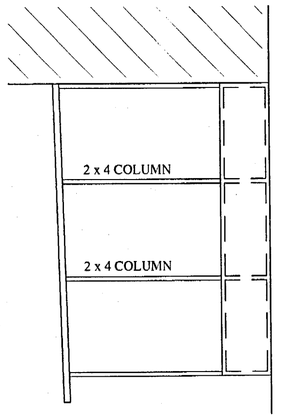

SIDE VIEW 1/4" : 1'-0"

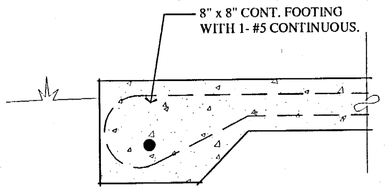

FOOTING DETAIL WF-B

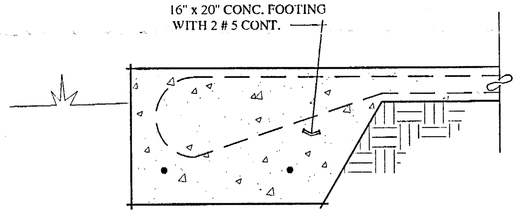

FOOTING DETAIL WF-A

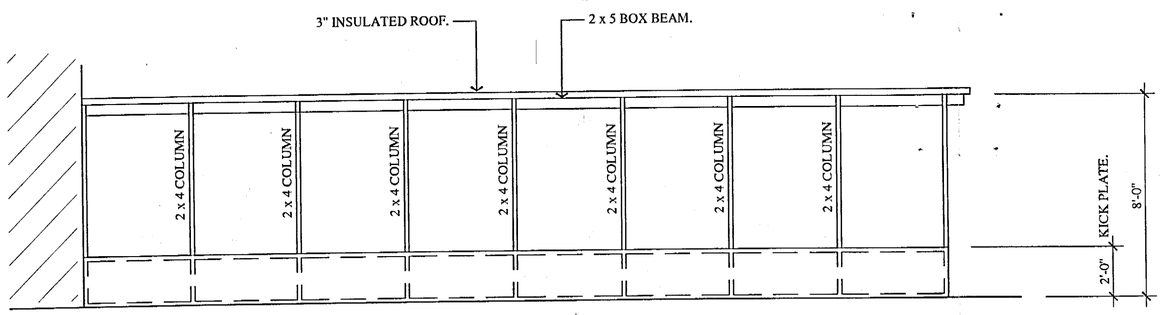

FRONT VIEW 1/4" : 1'-0"

CITY OF MIAMI SPRINGS, FLA.
APPROVED
FOR PERMIT ONLY
BUILDING INSPECTOR
PLUMBING INSPECTOR
ELECTRICAL INSPECTOR
MECHANICAL INSPECTOR
ZONING
STRUCTURAL 4/19/04

GENERAL NOTES:

1. CONTRACTOR TO VERIFY ALL DIMENSIONS.
2. SEE ATTACHED SPECIFICATION SHEET(S) FOR ADDITIONAL DETAILS.
3. STRUCTURE SHALL BE BUILT ACCORDING TO ATTACHED SPECIFICATION SHEETS AND DETAILS.
4. DOORS ARE OPTIONAL, CONTRACTOR TO VERIFY LOCATION.
5. DOORS TO BE SELF-CLOSING AND SELF LATCHING.
6. SCREEN ENCLOSURE HAS BEEN DESIGNED BY RATIONAL ANALYSIS. THE EXISTING STRUCTURE IS SUFFICIENT ENOUGH TO BEAR THE ADDITIONAL LOAD OF THE NEW SCREEN STRUCTURE.
7. COMPLIES WITH THE FLORIDA BUILDING CODE 2001.
8. 146 M.P.H. WIND ZONE. EXPOSURE "C" ASCE 7-98 0-15' HEIGHT.

ROBERT S. MONSOUR No. 11955 STATE OF FLORIDA PROFESSIONAL ENGINEER

DATE:	01-15-04
DRAWN BY:	I. Valido
SCALE:	1/4" : 1'-0"
FILE NAME:	C:\Diaz
SHEET	1

RAMMS ENGINEERING, INC.
Structural Design
EB 0006024 P.E. FL# 11955
2100 W. 76th STREET, SUITE 311 HIALEAH, FLORIDA 33016
Ph.: 305-822-3141 P.E. FL# 11955

Diaz Residence

200 N Explanade Dr.
Miami Spring, FL

CITY OF MIAMI SPRINGS

HIALEAH ALUMINUM SUPPLY INC.

2260 West 76th. Street
Hialeah, Florida 33016
Phone: (305) 821-0103

SCREN ROOM W/ 3" INSULATED ALUMINUM ROOF PANEL PRODUCT AUTHORIZATION FORM

APRIL 16, 2004

MIAMI SPRINGS
BUILDING OFFICIAL
201 WESTWARD DR.
MIAMI SPRINGS, FLORIDA

WE ARE THE DADE COUNTY NOTICE OF ACCEPTANCE HOLDER FOR THE SCREEN ROOM W/ 3" INSULATED ALUMINUM ROOF PANEL UNDER NUMBER 97-0527.08 & RENEWAL # 00-1018.02

THIS LETTER AUTHORIZES D.L. ALUMINUM TO USE OUR 3" ALUMINUM ROOF PANELS, APPROVED UNDER NUMBER 97-0527.08 TO BE USED AT THE FOLLOWING JOB:

DIAZ RESIDENCE
200 N. ESPLANADE DR.
MIAMI SPRINGS, FLORIDA
33166

SINCERELY:

HIALEAH ALUMINUM SUPPLY INC.
DAGMARA FIGUERAS
VICE-PRESIDENT

1. **This form must** accompany the application for Building permit and shall become part of the **permit documents.**
2. **The authorized** signature must bear a raised corporate seal of the company holding the Dade **County** notice of acceptance.

MIAMI-DADE COUNTY, FLORIDA
METRO-DADE FLAGLER BUILDING

BUILDING CODE COMPLIANCE OFFICE
METRO-DADE FLAGLER BUILDING
140 WEST FLAGLER STREET, SUITE 1603
MIAMI, FLORIDA 33130-1563
(305) 375-2901 FAX (305) 375-2908

CONTRACTOR LICENSING SECTION
(305) 375-2527 FAX (305) 375-2558

CONTRACTOR ENFORCEMENT DIVISION
(305) 375-2966 FAX (305) 375-2908

PRODUCT CONTROL DIVISION
(305) 375-2902 FAX (305) 372-6339

PRODUCT CONTROL NOTICE OF ACCEPTANCE

Hialeah Aluminum Supply, Inc.
2360 W. 76 Street
Hialeah ,FL 33016

Your application for Notice of Acceptance (NOA) of:
Screen Room with Aluminum Sandwich Roof Panel ✓
under Chapter 8 of the Code of Miami-Dade County governing the use of Alternate Materials and Types of Construction, and completely described herein, has been recommended for acceptance by the Miami-Dade County Building Code Compliance Office (BCCO) under the conditions specified herein.

This NOA shall not be valid after the expiration date stated below. BCCO reserves the right to secure this product or material at any time from a jobsite or manufacturer's plant for quality control testing. If this product or material fails to perform in the approved manner, BCCO may revoke, modify, or suspend the use of such product or material immediately. BCCO reserves the right to revoke this approval, if it is determined by BCCO that this product or material fails to meet the requirements of the South Florida Building Code.

The expense of such testing will be incurred by the manufacturer.

ACCEPTANCE NO.: 00-1018.02
EXPIRES: 01/08/2006 ✓

Raul Rodriguez
Chief Product Control Division

THIS IS THE COVERSHEET, SEE ADDITIONAL PAGES FOR SPECIFIC AND GENERAL CONDITIONS
BUILDING CODE & PRODUCT REVIEW COMMITTEE

This application for Product Approval has been reviewed by the BCCO and approved by the Building Code and Product Review Committee to be used in Miami-Dade County, Florida under the conditions set forth above.

Francisco J. Quintana, R.A.
Director
Miami-Dade County
Building Code Compliance Office

APPROVED: 01/04/2001 MC 4/19/04

Hialeah Aluminum Supply, Inc.

ACCEPTANCE No. : 00-1018.02

APPROVED : 01/04/2001

EXPIRES : 01/08/2006

NOTICE OF ACCEPTANCE: SPECIFIC CONDITIONS

1. SCOPE

This renews the Notice of Acceptance No. 97-0527.08, which was issued on January 08, 1998. It approves an aluminum screen room, as described in Section 2 of this Notice of Acceptance, designed to comply with the South Florida Building Code, 1994 Edition for Miami-Dade County, for the locations where the pressure requirements, as determined by SFBC Chapter 23, do not exceed the Design Pressure Rating values indicated in the approved drawings.

2. PRODUCT DESCRIPTION

This aluminum screen room and its components shall be constructed in strict compliance with the following documents: Drawing No. 97-109 titled "Insulated Screen Room", prepared by Tilteco, Inc., dated April 09, 1997, last revision #2 dated December 01, 1997, sheets 1 through 6 of 6, bearing the Miami-Dade County Product Control Approval and Renewal stamps with the Notice of Acceptance numbers and approval dates by the Miami-Dade County Product Control Division. These documents shall hereinafter be referred to as the approved drawings.

3. LIMITATIONS

All permanent set components, included but not limited to embedded anchor bolts, must be protected against corrosion, contamination and damage at all times.

4. INSTALLATION

This aluminum screen room and its components shall be installed in strict compliance with the approved drawings.

5. LABELING

This aluminum screen room shall bear a permanent label with the manufacturer's name or logo, city, state and the following statement: "Miami-Dade County Product Control Approved". The label shall be placed at the bottom of the chair rail at each bay of the screen room and at each roof panel.

6. BUILDING PERMIT REQUIREMENTS

6.1 Application for building permit shall be accompanied by copies of the following:

6.1.1 This Notice of Acceptance.

6.1.2 Duplicate copies of the approved drawings, as identified in Section 2 of this Notice of Acceptance, clearly marked to show the components selected for the proposed installation.

6.1.3 Any other documents required by the Building Official or the South Florida Building Code (SFBC) in order to properly evaluate the installation of this system.

Helmy A. Makar, P.E.- Product Control Examiner
Product Control Division

Hialeah Aluminum Supply, Inc.

ACCEPTANCE No. : 00-1018.02

APPROVED : 01/04/2001

EXPIRES : 01/08/2006

NOTICE OF ACCEPTANCE: STANDARD CONDITIONS

1 Renewal of this Acceptance (approval) shall be considered after a renewal application has been filed and the original submitted documents, including test-supporting data, engineering documents, are no older than eight (8) years.

2. Any and all approved products shall be permanently labeled with the manufacturer's name, city, state, and the following statement: "Miami-Dade County Product Control Approved", or as specifically stated in the specific conditions of this Acceptance.

3. Renewals of Acceptance will not be considered if:
   a. There has been a change in the South Florida Building Code affecting the evaluation of this product and the product is not in compliance with the code changes.
   b. The product is no longer the same product (identical) as the one originally approved.
   c. If the Acceptance holder has not complied with all the requirements of this acceptance, including the correct installation of the product.
   d. The engineer, who originally prepared, signed and sealed the required documentation initially submitted, is no longer practicing the engineering profession.

4. Any revision or change in the materials, use, and/or manufacture of the product or process shall automatically be cause for termination of this Acceptance, unless prior written approval has been requested (through the filing of a revision application with appropriate fee) and granted by this office.

5. Any of the following shall also be grounds for removal of this Acceptance:
   a. Unsatisfactory performance of this product or process.
   b. Misuse of this Acceptance as an endorsement of any product, for sales, advertising or any other purposes.

6. The Notice of Acceptance number preceded by the words Miami-Dade County, Florida, and followed by the expiration date may be displayed in advertising literature. If any portion of the Notice of Acceptance is displayed, then it shall be done in its entirety.

7. A copy of this Acceptance as well as approved drawings and other documents, where it applies, shall be provided to the user by the manufacturer or its distributors and shall be available for inspection at the job site at all time. The engineer needs not reseal the copies.

8. Failure to comply with any section of this Acceptance shall be cause for termination and removal of Acceptance.

9. This Notice of Acceptance consists of pages 1, 2 and this last page 3.

END OF THIS ACCEPTANCE

Helmy A. Makar, P.E.- Product Control Examiner
Product Control Division

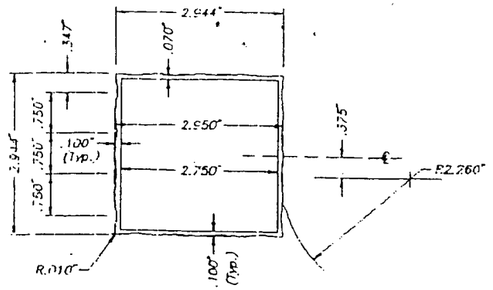

(1) 3" x 3" FLUTED POST
SCALE: 3/8" = 1"

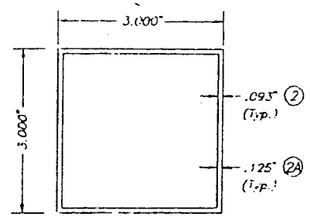

(2), (2A) 3" x 3" COLUMN
SCALE: 3/8" = 1"

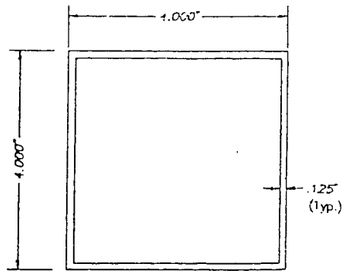

(3) 4" x 4" COLUMN
SCALE: 3/8" = 1"

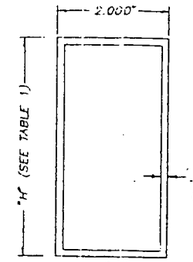

(4) (5) (6) & (7) RECTANGULAR BEAM
SCALE: 3/8" = 1"

TABLE 1

MARK	"H"
(4)	3"
(5)	4"
(6)	5"
(7)	6"

GENERAL NOTES:

1. THIS STRUCTURE HAS BEEN DESIGNED IN ACCORDANCE WITH CHAPTERS 23, 28 & 44 OF THE 1994 EDITION OF THE SOUTH FLORIDA BUILDING CODE. WIND VELOCITY CONSIDERED IS 110 m.p.h. DESIGN WIND LOAD AS PER SECTION 6 OF ASCE 7-88.
2. DEFLECTION FOR COLUMNS, BEAMS AND ROOF PANELS SHALL BE AS FOLLOWS:
   - L/80 FOR ROOF PROJECTIONS FROM EXISTING STRUCTURE LESS THAN OR EQUAL TO 12 FEET WHEN USED FOR RESIDENTIAL OCCUPANCY.
   - L/180 FOR ALL COMMERCIAL PROJECTS AND FOR RESIDENTIAL WHEN ROOF PROJECTION FROM EXISTING STRUCTURE IS GREATER THAN 12 FEET.
3. ALL EXTRUSIONS TO BE 6063-T6 ALUMINUM ALLOY UNLESS OTHERWISE NOTED.
4. THE THICKNESS OF ALL EXTRUSIONS SHALL BE AS SHOWN ON THIS DRAWING WITH STANDARD TOLERANCES IN ACCORDANCE WITH THE "ALUMINUM STANDARDS AND DATA 1988 EDITION", ALUMINUM ASSOCIATION INCORPORATED, WASHINGTON D. C.
5. ALUMINUM ROOF PANEL ALLOYS SHALL BE 3105-H254.
6. ALL SCREWS TO BE 304 SERIES STAINLESS STEEL OR 2024-T4 ALUMINUM ALLOY.
7. ALL BOLTS TO BE A. S. T. M. A-307 GALVANIZED STEEL OR 2024-T4 ALUMINUM ALLOY.
8. ALL CONCRETE SHALL DEVELOP 3000 p.s.i. COMPRESSIVE STRESS AT 28 DAYS. WELDED WIRE FABRIC SHALL COMPLY W/ ASTM A-185.
9. ALL REINFORCING STEEL SHALL BE A.S.T.M. A-615 GRADE 60 DESIGNATION BARS.
10. SCREEN USED ON WALLS SHALL BE 60 PERCENT MINIMUM OPEN.
11. ALUMINUM MEMBERS IN CONTACT WITH CONCRETE AND WOOD SHALL BE PROTECTED BY KOPPERS BITUMINOUS PAINT ACCORDING TO S.F.B.C. SECTION 3004.4 (d) AND (e). WHEN ALUMINUM IS IN CONTACT WITH PRESSURE TREATED WOOD, IT SHALL BE IN ACCORDANCE WITH THE S.F.B.C. SECTION 3004.4 (f).
12. IT SHALL BE THE RESPONSIBILITY OF THE CONTRACTOR TO VERIFY THE SOUNDNESS OF THE STRUCTURE WHERE SCREEN ROOM IS TO BE ATTACHED TO INSURE PROPER ANCHORAGE.
13. MINIMUM SOIL BEARING CAPACITY TO BE 2000 p.s.f.
14. CONCRETE AND MASONRY ANCHORS SHALL BE TAPCON TYPE ANCHORS, AS MANUFACTURED BY I.T.W./RAMSET OR ELCO INDUSTRIES, INC., OR RED HEAD WEDGE ANCHORS, AS MANUFACTURED BY I.T.W./RAMSET. DIAMETERS AND LENGTHS SHALL BE AS SPECIFIED ON DRAWINGS. MINIMUM PENETRATION INTO MASONRY IS 1 1/4". MINIMUM PENETRATION INTO CONCRETE IS 1 3/4". MINIMUM MINIMUM PENETRATION IS IN ADDITION TO ANY ADDED LENGTH REQUIRED TO PENETRATE EXISTING PRECAST STONE, PRECAST CONCRETE PANELS, PAVERS OR TILES THAT COULD BE COVERING THE CONCRETE OR MASONRY WALL OR FLOOR.
15. THIS STRUCTURE SHALL BE CONSTRUCTED ATTACHED TO A C.B.S. WITH MEAN ROOF HEIGHT EQUAL OR LESS THAN 60'-0". NOTIFY THIS ENGINEER IF THE ABOVE CONDITION IS NOT COMPLIED WITH. THIS STRUCTURE SHALL BE INSTALLED LESS THAN 15'-0" HIGH ABOVE GROUND LEVEL.

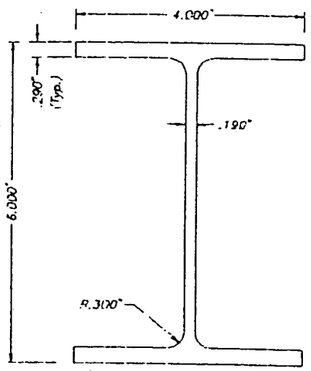

(8) "I" BEAM
SCALE: 3/8" = 1"

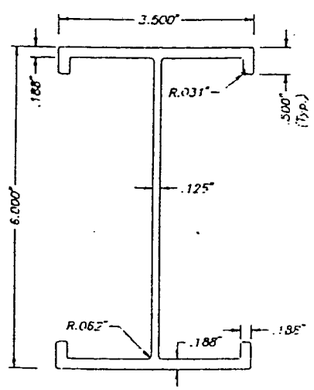

(9) "I" BEAM
SCALE: 3/8" = 1"

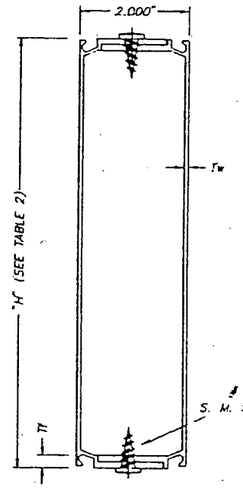

(10) (11) (12) (13) & (14) LAP BEAM
SCALE: 3/4" = 1"

TABLE 2

MARK	"H"	Tw	Tf
(10)	4"	.055"	.104"
(11)	6"	.055"	.120"
(12)	7"	.070"	.264"
(13)	8"	.082"	.224"
(14)	9"	.072"	.450"

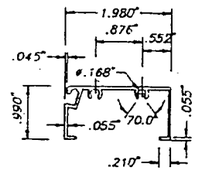

(15) 1" x 2" PATIO SECTION
SCALE: 3/4" = 1"

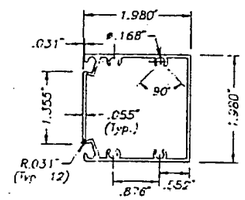

(16) 2" x 2" PATIO SECTION
SCALE: 3/8" = 1"

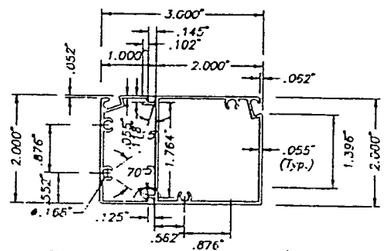

(17) CORNER COLUMN
SCALE: 3/8" = 1"

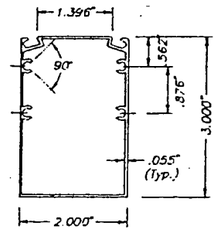

(18) 2" x 3" PATIO SECTION
SCALE: 3/8" = 1"

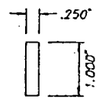

(19) 1" FLAT BAR
6063-T5 ALUMINUM ALLOY
SCALE: 3/8" = 1"

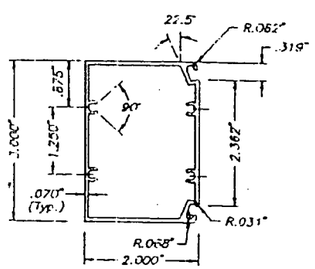

(20) 2" x 3" PANEL TUBE
SCALE: 3/8" = 1"

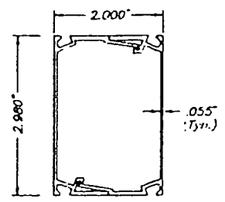

(21) 2" x 3" SNAP COLUMN
SCALE: 3/8" = 1"

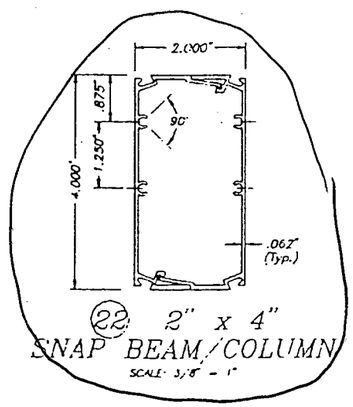

(22) 2" x 4" SNAP BEAM/COLUMN
SCALE: 3/8" = 1"

14-97

PRODUCT RENEWED

ACCEPTANCE No. 00-1018.02
EXPIRATION DATE 01/08/2006
By Helena A. Mak
PRODUCT CONTROL DIVISION
BUILDING CODE COMPLIANCE OFFICE

APPROVED AS COMPLYING WITH THE SOUTH FLORIDA BUILDING CODE
DATE JANUARY 8 19 98
BY Helena A. Mak
PRODUCT CONTROL DIVISION
BUILDING CODE COMPLIANCE OFFICE
ACCEPTANCE NO. 97-0527.08
DADE COUNTY

COPYRIGHT 1996 TILTECO, INC.

TILTECO INC.
TILLIT TESTING & ENGINEERING COMPANY
(59th N.W. 76th St., Ste. 217 VIRGINIA GARDENS, FL 33166
Phone : (305)871-1530 . Fax : (305)871-1531
WALTER A. TILLIT Jr., P. E.
FLORIDA Lic. 44167

INSULATED SCREEN ROOM

HIALEAH ALUMINUM SUPPLY, INC.
2360 W. 76th STREET
HIALEAH, FLORIDA 33016

AS SHOWN SCALE
4/9/97 DATE
97 - 109 DRAWING No
SHEET 1 OF 5

REV. NO	DESCRIPTION	DATE	REV. No.	DESCRIPTION	DATE
1	GENERAL	6-11-97	3		
2	GENERAL	12-1-97	4		

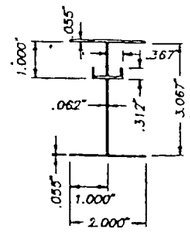

(A) 2" x 3" PURLIN

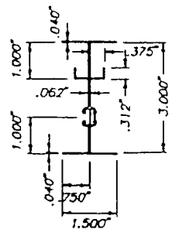

(B) THERMAL FILL-PULIN

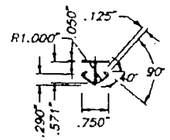

(C) CLIP

PANEL CONNECTORS

SCALE: 1/4" = 1"

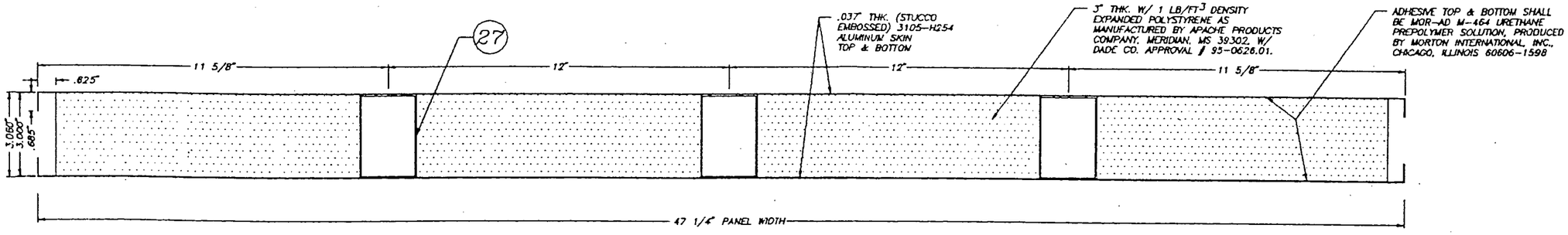

(26) ROOF PANEL SECTION

SCALE: 1/4" = 1"

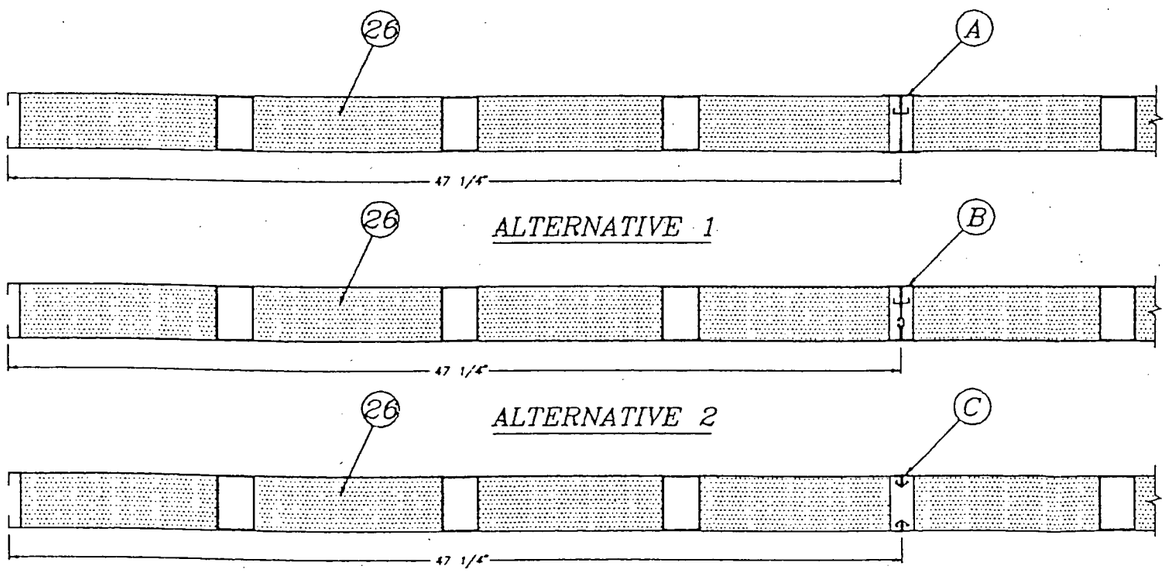

ALTERNATIVE 3

ALTERNATIVES FOR SIDE LAP PANEL CONNECTION

SCALE: 1/8" = 1"

12/1/97

PRODUCT RENEWED

ACCEPTANCE No. 00-1018.02

EXPIRATION DATE 01/08/2006

By _____
PRODUCT CONTROL DIVISION
BUILDING CODE COMPLIANCE OFFICE

APPROVED AS COMPLYING WITH THE SOUTH FLORIDA BUILDING CODE
DATE JANUARY 8 19 98
BY _____
PRODUCT CONTROL DIVISION
BUILDING CODE COMPLIANCE OFFICE
ACCEPTANCE NO. 97-0527.08

DADE COUNTY

COPYRIGHT 1996 TILTECO, INC.

TILTECO INC.
TILLIT TESTING & ENGINEERING COMPANY
6595 N.W. 36th. St., Ste. 217, VIRGINIA GARDENS, FL 33166
Phone : (305)871-1530 . Fax : (305)871-1531

WALTER A. TILLIT Jr., P. E.
FLORIDA Lic. 44167

INSULATED SCREEN ROOM

HIALEAH ALUMINUM SUPPLY, INC.
2360 W. 76th STREET
HIALEAH, FLORIDA 33016

REV. NO	DESCRIPTION	DATE	REV. No	DESCRIPTION	DATE
1	GENERAL	6-11-97	3		
2	GENERAL	12-1-97	4		

AS SHOWN SCALE

4/9/97 DATE

97 - 109 DRAWING No

SHEET 2 OF 6

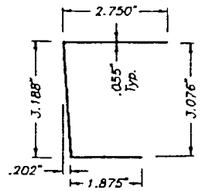

(23) HEADER
SCALE: 3/8" = 1"

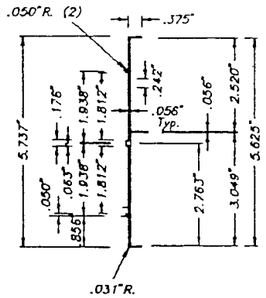

(24) VALANCE
6063-T5 ALUMINUM ALLOY
SCALE: 3/8" = 1"

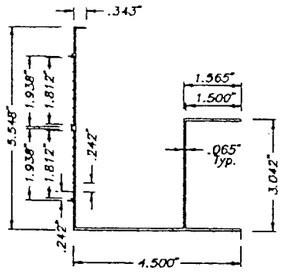

(25) "T" GUTTER
6063-T5 ALUMINUM ALLOY
SCALE: 3/8" = 1"

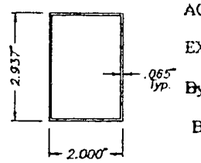

(27) PANEL TUBE
6063-T6 ALUMINUM ALLOY
SCALE: 3/8" = 1"

PRODUCT RENEWED
ACCEPTANCE No. 00-1018.02
EXPIRATION DATE 01/08/2006
By Helena A. Mesa
PRODUCT CONTROL DIVISION
BUILDING CODE COMPLIANCE OFFICE

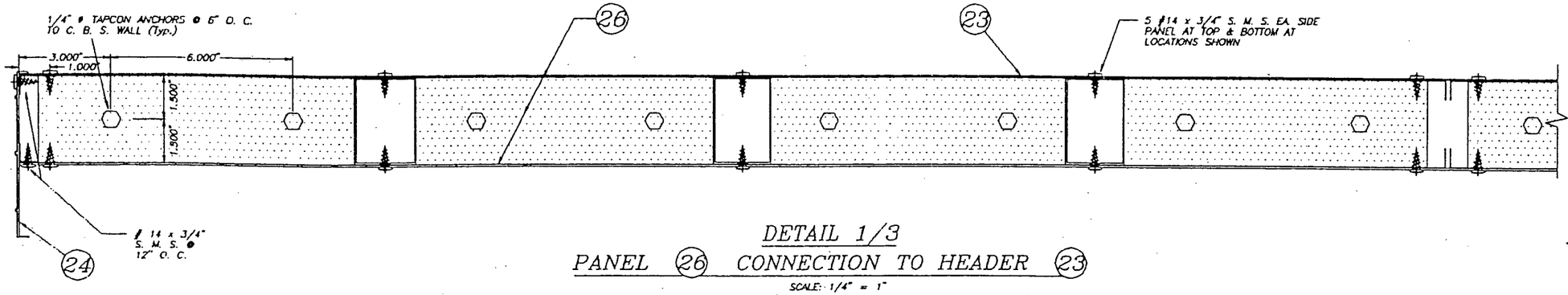

DETAIL 1/3
PANEL (26) CONNECTION TO HEADER (23)
SCALE: 1/4" = 1"

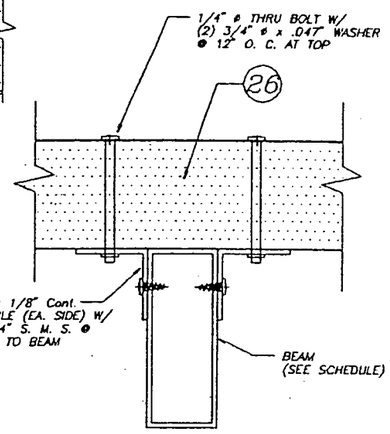

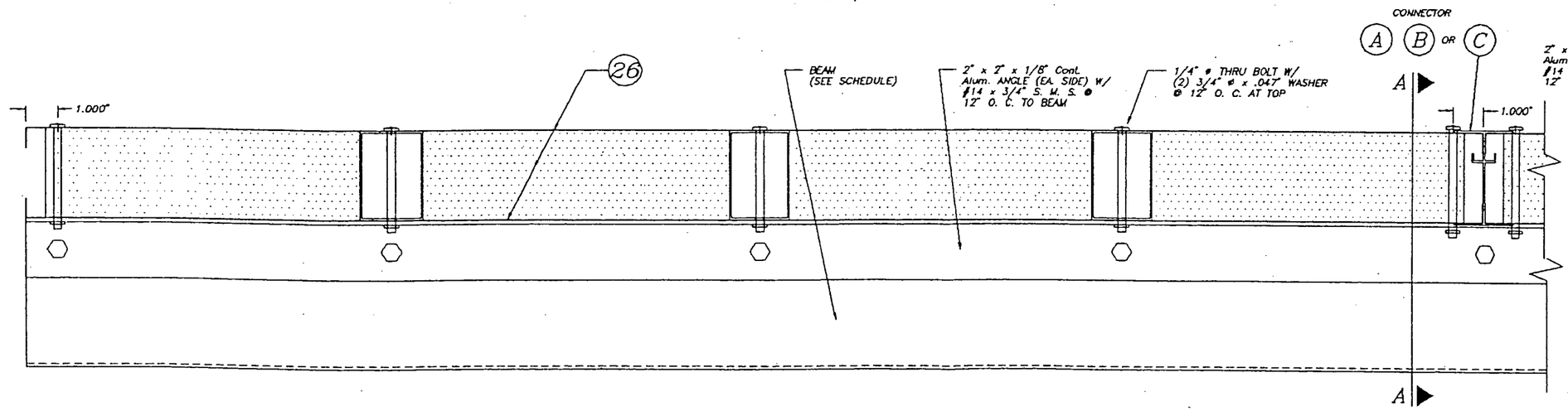

DETAIL 2/3
PANEL (26) CONNECTION TO BEAMS
SCALE: 1/4" = 1"

APPROVED AS COMPLYING WITH THE SOUTH FLORIDA BUILDING CODE
DATE JANUARY 8, 1998
BY Helena A. Mesa
PRODUCT CONTROL DIVISION
BUILDING CODE COMPLIANCE OFFICE
ACCEPTANCE NO. 97-0527.08

DADE COUNTY

COPYRIGHT 1996 TILTECO, INC.

TILTECO INC.
TILLIT TESTING & ENGINEERING COMPANY
6595 N.W. 36th. St., Ste. 217, VIRGINIA GARDENS, FL 33166
Phone : (305)871-1530 . Fax : (305)871-1531
WALTER A. TILLIT Jr., P. E.
FLORIDA Lic. 44167

INSULATED SCREEN ROOM

HIALEAH ALUMINUM SUPPLY, INC.
2360 W. 76th STREET
HIALEAH, FLORIDA 33016

REV. NO	DESCRIPTION	DATE	REV. No	DESCRIPTION	DATE
1	GENERAL	6-11-97	3		
2	GENERAL	12-1-97	4		

AS SHOWN SCALE
4/9/97 DATE
97 - 109 DRAWING No
SHEET 3 OF 6

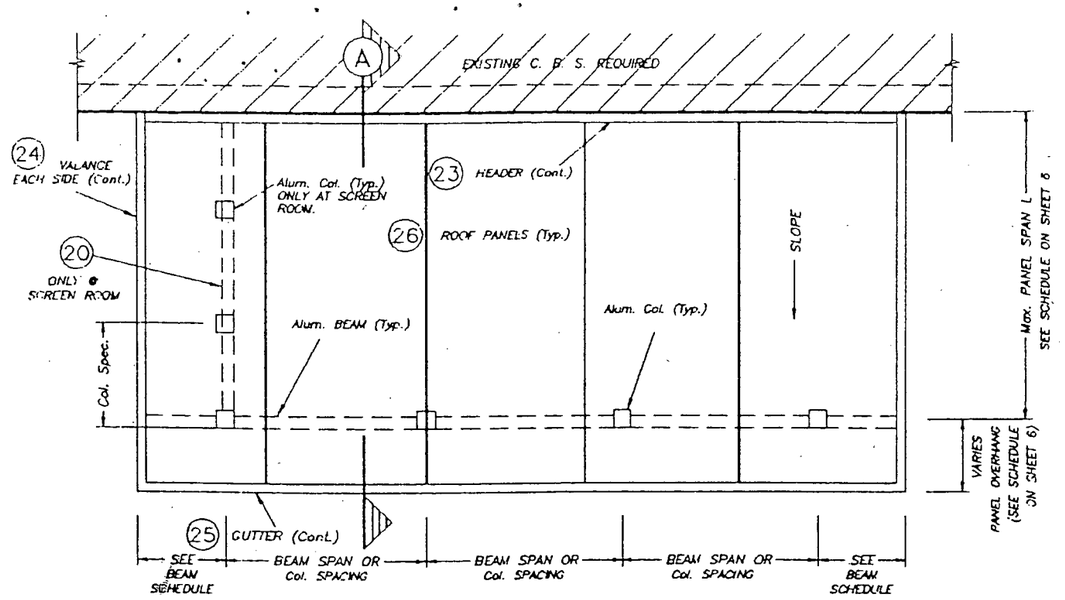

ROOF PLAN–MONOSLOPE ROOF
SCREEN ROOM (W/ OR W/O SCREEN)

N. T. S.

NOTE: SEE BEAM & COLUMN SCHEDULE ON SHEET 6 OF 6.

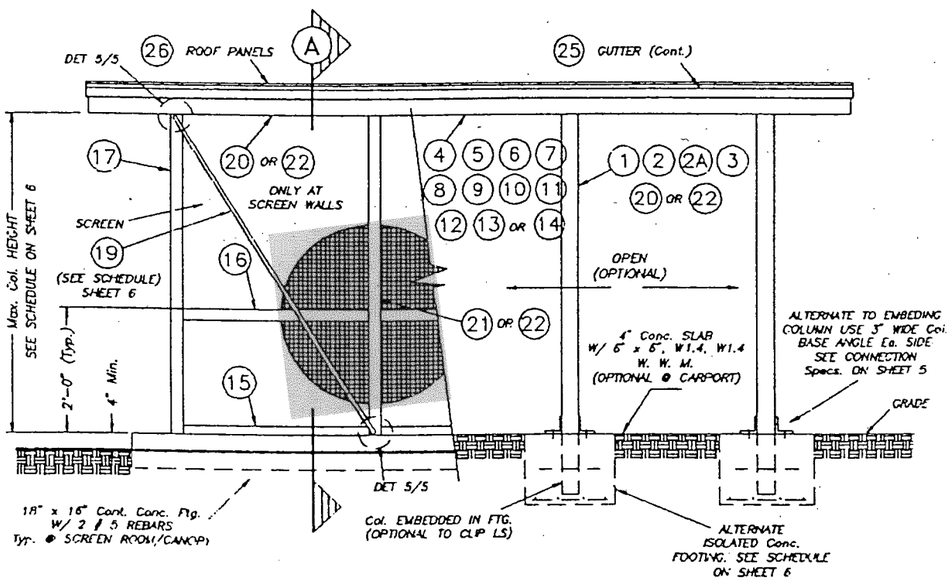

ELEVATION–MONOSLOPE ROOF
SCREEN ROOM (W/ OR W/O SCREEN)

N. T. S.

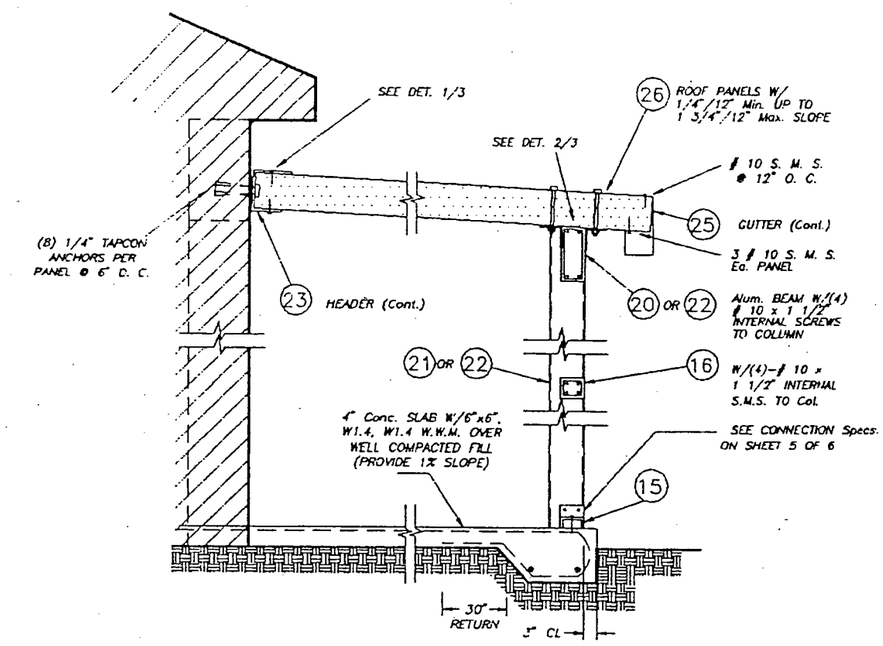

SECTION A

N. T. S.

NOTE :
FOR SCREEN ROOMS ONLY, ALWAYS USE 20 BEAM W/ 21 OR 22 COLUMN & 22 BEAM W/ 22 COLUMN

PRODUCT RENEWED

ACCEPTANCE No. 00-1018.02
EXPIRATION DATE 01/08/2006
By Helmy A. Maker
PRODUCT CONTROL DIVISION
BUILDING CODE COMPLIANCE OFFICE

APPROVED AS COMPLYING WITH THE SOUTH FLORIDA BUILDING CODE
DATE JANUARY 8 1998
BY Helmy A. Maker
PRODUCT CONTROL DIVISION
BUILDING CODE COMPLIANCE OFFICE
ACCEPTANCE NO. 97-0529.08

DADE COUNTY

COPYRIGHT 1996 TILTECO, INC.

TILTECO INC.
TILLIT TESTING & ENGINEERING COMPANY
4585 N.W. 36th. St., Ste. 217, VIRGINIA GARDENS, FL 33166
Phone : (305)871-1530 . Fax : (305)871-1531
WALTER A. TILLIT Jr., P. E.
FLORIDA Lic. # 44167

INSULATED SCREEN ROOM

HIALEAH ALUMINUM SUPPLY, INC.
2360 W. 76th STREET
HIALEAH, FLORIDA 33016

REV. NO	DESCRIPTION	DATE	REV. No	DESCRIPTION	DATE
1	GENERAL	6-11-97	3		
2	GENERAL	12-1-97	4		

AS SHOWN SCALE
4/9/97 DATE
97 – 109 DRAWING No
SHEET 4 OF 6

12/1/97

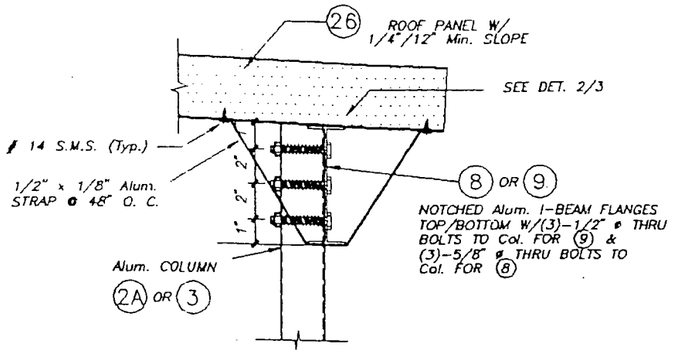

I-BEAM/COLUMN CONNECTION DETAIL

N. T. S.

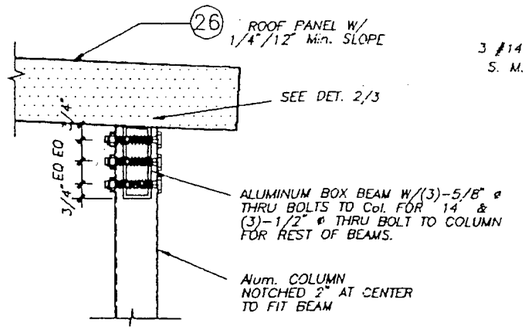

BOX BEAM/COLUMN CONNECTION DETAIL

N. T. S.

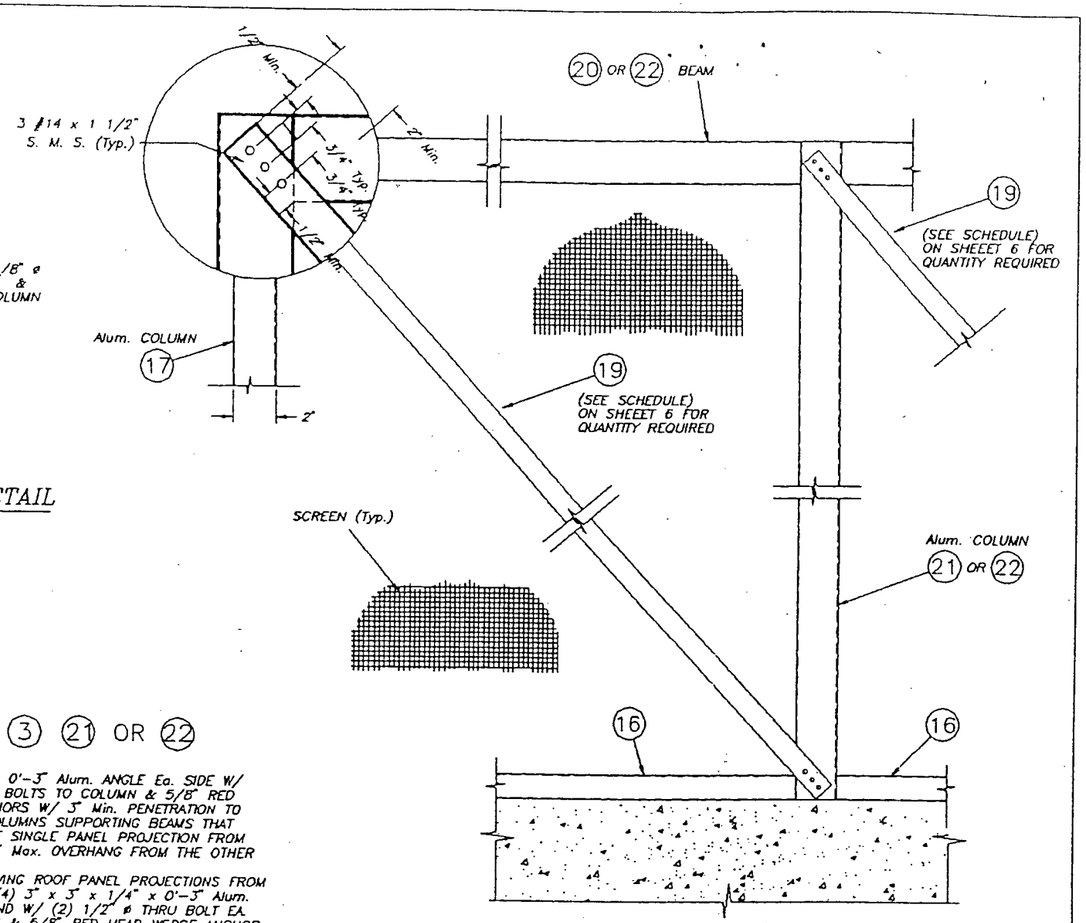

DETAIL 5 : BRACING CONNECTION DETAIL (ELEVATION)

N. T. S.

NOTE : THIS DETAIL IS ONLY REQUIRED FOR SCREEN ROOMS. FRONT WALLS

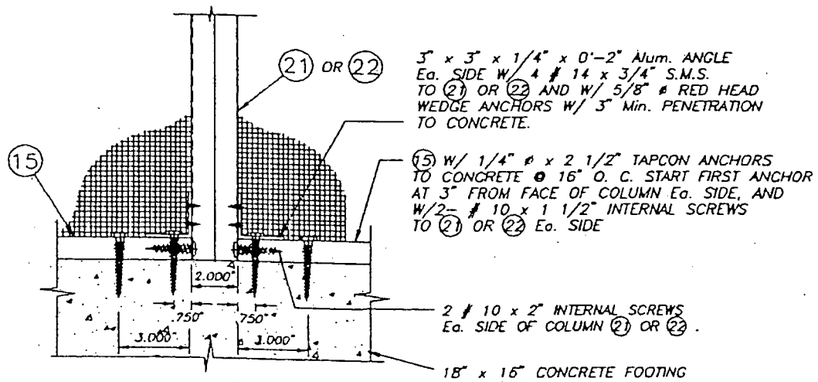

CASE 1

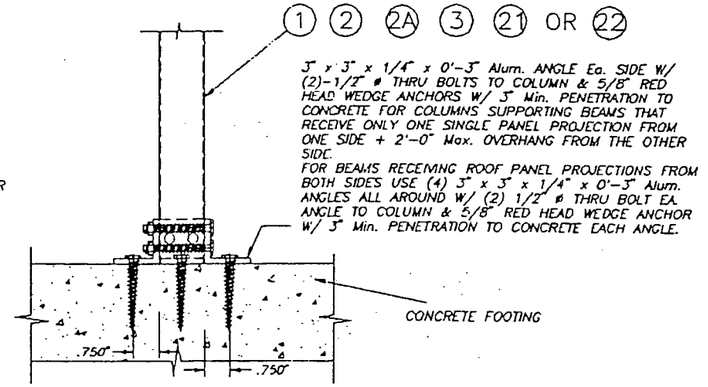

CASE 2

COLUMN CONNECTION TO FOOTING

N. T. S.

PRODUCT RENEWED

ACCEPTANCE No. 00-1018.02

EXPIRATION DATE 01/08/2006

By Helmy A. Maker

PRODUCT CONTROL DIVISION

BUILDING CODE COMPLIANCE OFFICE

APPROVED AS COMPLYING WITH THE SOUTH FLORIDA BUILDING CODE

DATE JANUARY 8 1998

BY Helmy A. Maker

PRODUCT CONTROL DIVISION

BUILDING CODE COMPLIANCE OFFICE

ACCEPTANCE NO. 97-0527.08

DADE COUNTY

COPYRIGHT 1996 TILTECO, INC.

TILTECO INC.
TILLIT TESTING & ENGINEERING COMPANY
6585 N.W. 36th. St., Ste. 217, VIRGINIA GARDENS, FL 33166
Phone : (305)871-1530 . Fax : (305)871-1531
WALTER A. TILLIT Jr., P. E.
FLORIDA Lic. # 44167

INSULATED SCREEN ROOM

HIALEAH ALUMINUM SUPPLY, INC.
2360 W. 76th STREET
HIALEAH, FLORIDA 33016

REV. NO	DESCRIPTION	DATE	REV. No	DESCRIPTION	DATE
1	GENERAL	6-11-97	3		
2	GENERAL	12-1-97	4		

AS SHOWN SCALE

4/9/97 DATE

97 - 109 DRAWING No

SHEET 5 OF 6

12/1/97

BEAM SCHEDULE MAXIMUM SPAN FOR A GIVEN TRIBUTARY WIDTH *

L/80
L/180

BEAM TYPE	TRIBUTARY WIDTH *								MAXIMUM BEAM OVERHANG
	5'-0"	6'-0"	7'-0"	8'-0"	9'-0"	10'-0"	11'-0"	12'-0"	
④	7'-1"	6'-5"	6'-0"	5'-7"	5'-3"	5'-0"	4'-9"	4'-7"	2'-0"
	5'-6"	5'-2"	4'-11"	4'-8"	4'-6"	4'-4"	4'-3"	4'-2"	2'-0"
⑤	8'-8"	7'-11"	7'-4"	6'-10"	6'-6"	6'-2"	5'-10"	5'-7"	2'-6"
	7'-0"	6'-7"	6'-3"	6'-0"	5'-9"	5'-6"	5'-4"	5'-2"	2'-6"
⑥	10'-2"	9'-3"	8'-7"	8'-0"	7'-7"	7'-2"	6'-10"	6'-7"	3'-0"
	8'-5"	7'-11"	7'-6"	7'-2"	6'-11"	6'-8"	6'-6"	6'-3"	3'-0"
⑦	11'-7"	10'-7"	9'-9"	9'-2"	8'-7"	8'-2"	7'-10"	7'-6"	3'-6"
	9'-10"	9'-3"	8'-9"	8'-5"	8'-0"	7'-10"	7'-7"	7'-4"	3'-0"
⑧ **	13'-6"	12'-8"	12'-0"	12'-0"	12'-0"	12'-0"	12'-0"	11'-7"	5'-0"
	13'-6"	12'-8"	12'-0"	11'-6"	11'-1"	10'-8"	10'-4"	10'-0"	5'-0"
⑨ **	12'-0"	12'-0"	12'-0"	11'-8"	10'-11"	10'-5"	9'-11"	9'-6"	4'-6"
	11'-10"	11'-2"	10'-7"	10'-2"	9'-9"	9'-5"	9'-2"	8'-10"	4'-0"
⑩	7'-3"	6'-7"	6'-2"	5'-9"	5'-5"	5'-2"	4'-10"	4'-8"	2'-0"
	6'-2"	5'-10"	5'-6"	5'-4"	5'-1"	4'-11"	4'-9"	4'-7"	2'-0"
⑪	9'-8"	8'-10"	8'-2"	7'-8"	7'-3"	6'-10"	6'-6"	6'-3"	3'-0"
	8'-9"	8'-3"	7'-10"	7'-6"	7'-2"	6'-10"	6'-6"	6'-3"	3'-0"
⑫ **	12'-0"	12'-0"	11'-10"	11'-1"	10'-5"	9'-11"	9'-5"	9'-0"	4'-6"
	12'-0"	11'-4"	10'-7"	10'-3"	9'-10"	9'-6"	9'-3"	9'-0"	4'-0"
⑬ **	13'-0"	12'-3"	12'-0"	11'-9"	11'-1"	10'-6"	10'-0"	9'-7"	4'-6"
	13'-0"	12'-3"	11'-8"	11'-2"	10'-9"	10'-4"	10'-0"	9'-7"	4'-0"
⑭ **	15'-2"	14'-3"	13'-8"	12'-11"	12'-6"	12'-0"	11'-8"	11'-3"	5'-6"
	15'-2"	14'-3"	13'-6"	12'-11"	12'-6"	12'-0"	11'-6"	11'-3"	5'-0"
⑳ ***	5'-5"	5'-8"	4'-7"	4'-4"	–	–	–	–	1'-6"
	4'-7"	4'-4"	4'-2"	4'-0"	–	–	–	–	1'-6"
㉒ ***	6'-4"	5'-9"	5'-4"	5'-0"	4'-9"	4'-6"	4'-3"	4'-1"	2'-0"
	5'-7"	5'-4"	5'-0"	4'-10"	4'-7"	4'-6"	4'-3"	4'-1"	2'-0"

* TRIBUTARY WIDTH: – ROOF SPAN (FROM WALL TO FRONT BEAM)/2 + OVERHANG FOR ROOFS ATTACHED TO BUILDING.
– ROOF SPAN (FROM BEAM TO BEAM) FOR ROOF ATTACHED TO BUILDING WITH MULTIPLE BAYS.

** ⑧, ⑨, ⑫, ⑬ & ⑭ BEAMS SHALL ONLY BE USED JOINTLY WITH COLUMNS ㉔ OR ③.

*** ALWAYS USE ⑳ BEAM W/ ㉑ OR ㉒ COL. & ㉒ BEAM W/ ㉒ COL. (NEVER USE ㉒ BEAM W/ ㉑ COL.)

COLUMN SCHEDULE

MAXIMUM COLUMN SPACING (Ft.) * FOR A GIVEN HEIGHT, TYPE OF COLUMN AND TYPE OF STRUCTURE WHERE COLUMN IS LOCATED

COLUMN TYPE	L/80 / L/180 — SCREEN ROOMS W/ ROOF ATTACHED TO PERMANENT BUILDING					
	WITH SCREEN WALLS			W/O SCREEN WALLS		
	7'-0"	7'-6"	8'-0"	8'-0"	9'-0"	10'-0"
①	–	–	–	***	***	–
②	–	–	–	***	***	***
㉔	–	–	–	***	***	***
③	–	–	–	***	***	***
㉑	4'-5"	4'-0"	–	8'-4"	6'-7"	–
	–	–	–	8'-4"	6'-7"	–
㉒	**	**	**	***	14'-3"	–
	**	**	4'-7"	***	14'-3"	–

* Max. COLUMN SPACING SHALL NOT EXCEED Max. BEAM SPAN AS PER BEAM SCHEDULE FOR A GIVEN BEAM TYPE.

** LIMITED BY BEAM SPAN AS PER BEAM SCHEDULE BUT NOT TO EXCEED 7'-0".

*** LIMITED BY BEAM SPAN AS PER BEAM SCHEDULE.

MINIMUM FOOTING SIZE FOR A GIVEN ROOF TRIBUTARY AREA BEARING ON COLUMNS

ROOF AREA BEARING OR COLUMN (Ft.²)*	REQUIRED FOOTING SIZE IN SAND/ROCK	REINFORCING STEEL EQUALY SPACED EACH WAY. SAND/ROCK
144	5'-6" x 5'-6" / 3'-3" x 3'-3"	5 # 4 REBARS / 4 # 4 REBARS
120	5'-0" x 5'-0" / 2'-10" x 2'-10"	5 # 4 REBARS / 3 # 4 REBARS
90	4'-4" x 4'-4" / 2'-2" x 2'-2"	4 # 4 REBARS / 3 # 4 REBARS
60	3'-6" x 3'-6" / 2'-0" x 2'-0"	4 # 4 REBARS / 3 # 4 REBARS
40	2'-10" x 2'-10" / 2'-0" x 2'-0"	3 # 4 REBARS / 3 # 4 REBARS
25	2'-2" x 2'-2" / 2'-0" x 2'-0"	3 # 4 REBARS / 3 # 4 REBARS

* ROOF PANEL SPAN x BEAM SPAN (INTERIOR COLUMNS) OR (ROOF PANEL SPAN/2 + O. H.) x BEAM SPAN (END COLUMNS)

Max. ROOF PANEL SPAN SCHEDULE

SPAN CONDITION	Max. SPAN "L"	
	L/80	L/180
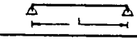	11'-0"	9'-2"
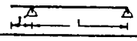	11'-3"	9'-3"
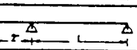	11'-6"	9'-6"
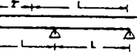	12'-0"	12'-0"
	12'-0"	11'-5"

* COLUMN MAY ALSO BE CLIPPED ANGLE TO FOOTING APPLICABLE TO ROOFS ATTACHED TO PERMANENT BUILDING.

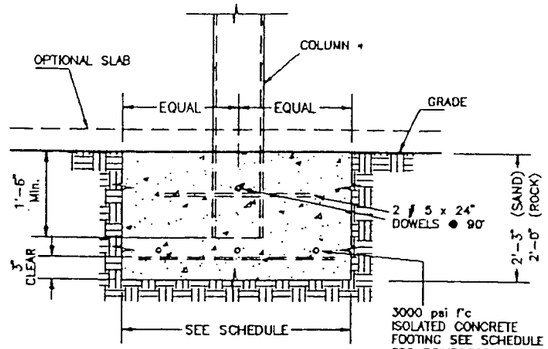

ISOLATED FOOTING DETAIL

STRAP (19) SCHEDULE

(REQ'D ONLY AT SCREEN ROOM W/ SCREEN WALLS)

ROOF PROJECTION P (ft.)	TOTAL NUMBER OF STRAPS AT FRONT WALL
11'-0" OR LESS	2
>11'-0" TO 22'-0" Max.	4

P = DISTANCE FROM EXISTING WALL TO FRONT SCREEN WALL

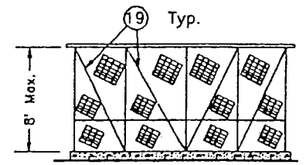

FRONT WALL ELEV.

PRODUCT RENEWED

ACCEPTANCE No. 00-1018.02

EXPIRATION DATE 01/08/2006

By Helmy A. Mahr
PRODUCT CONTROL DIVISION
BUILDING CODE COMPLIANCE OFFICE

APPROVED AS COMPLYING WITH THE SOUTH FLORIDA BUILDING CODE
DATE JANUARY 8 1998
BY Helmy A. Mahr
PRODUCT CONTROL DIVISION
BUILDING CODE COMPLIANCE OFFICE
ACCEPTANCE NO. 97-0527.08

DADE COUNTY

COPYRIGHT 1996 TILTECO, INC.

TILTECO INC.
TILLIT TESTING & ENGINEERING COMPANY
6595 N.W. 36th. St., Ste. 217, VIRGINIA GARDENS, FL 33166
Phone : (305)871-1530 . Fax : (305)871-1531
WALTER A. TILLIT Jr., P. E.
FLORIDA Lic. 44167

12-1-97

INSULATED SCREEN ROOM

HIALEAH ALUMINUM SUPPLY, INC.
2360 W 76th STREET
HIALEAH, FLORIDA 33016

REV. NO	DESCRIPTION	DATE	REV. No	DESCRIPTION	DATE
1	GENERAL	6-11-97			
2	GENERAL	12-1-97			

SCALE –
4/8/97 DATE
97 – 109 DRAWING No
SHEET 6 OF 6

M I A M I
201 WESTWARD DRIVE
MIAMI SPRINGS FLORIDA 331
(305) 805-5030

E L E C T R I C A L P E R

Application Number	20-00000130
Property Address	200 ESPLANAD
FOLIO NUMBER:	05-3118-016-
Application type description	ELECTRICAL W
Application valuation	2000

Owner

AILLETTE A DIAZ
200 ESPLANADE DRIVE
MIAMI SPRINGS FL 33166

Contra

ALEX F
2245 W
HIALEA
(305)

--- Structure Information 000 000 UPGRADE ELECT
Other struct info . . . . . COMMERCIAL ?
RESIDENTIAL ?
MASTER ?
SUBSIDIARY ?

Permit	ELECTRICAL PERMIT
Additional desc	UPGRADE ELECTRICAL SERVI
Permit pin number	415463
Permit Fee	125.00
Issue Date	11/08/19
Expiration Date	5/06/20

Valua

Qty	Unit Charge	Per
		BASE FEE

Fee summary	Charged	Paid	C
Permit Fee Total	125.00	125.00	
Grand Total	125.00	125.00	

Inspection results, plan tracking & MANY FORI
ON OUR WEB SITE AT http://www.miamisprings-f
applications and fee schedule are also availa
Go to: http://www.miamisprings-fl.gov
NEXT DAY INSPECTION REQUESTS MUST BE IN BEFOI

MIAMI SPRINGS

BUILDING DEPARTMENT
201 Westward Drive, Second Floor
Miami Springs, FL 33166
Office: 305-805-5030 Fax: 305-805-5036
www.miamisprings-fl.gov

MIAMI SPRINGS
At the Heart of It All!

Date:

RECEIVED
NOV 07 2019
BY: .....

JOB ADDRESS 200 esplanade

PERMIT APPLICATION

☑ Master Permit ☐ Sub-Permit Clerk OB

MASTER PERMIT NUMBER 20-130

1. OWNER INFORMATION
Owner Aillette Rodriguez
Address 200 Esplanade
City _____ ST _____ Zip _____
Driver License No. /I.D. _____
Phone No. 305-8888830

2. CONTRACTOR INFORMATION
Company Name Alex Electric Service
Qualifier Name Alex Varr
Address 2245 West 10 CT
City Hialeah ST FL Zip 33010
Lic. No. EC13001444 Phone No. 888 8830

3. PERMIT TYPE (Choose only One)
☐ Building
☒ Electrical
☐ Mechanical
☐ Plumbing/Gas
☐ Sign
☐ Roofing

4. CHANGE TO AN EXISTING PERMIT (Choose only One)
☐ Change Contractor
☐ Extension
☐ Renewal
☐ Shop Drawing
☐ Lost Plans

5. TYPE OF IMPROVEMENT (Choose only One)
☐ New Construction
☐ Addition Attached
☐ Alteration Interior
☒ Alteration Exterior
☐ Repair/Replace
☐ Demolition/Partial
☐ Re-roof
☐ Driveway
☐ Fence
☐ Window
☐ Door
☐ Shutters
☐ Pool
☐ Shed
☐ Other: _____

6. ARCHITECT/ ENGINEER INFO
Name _____
Address _____
City _____ ST _____ Zip Code _____
Lic. No. _____ Discipline _____
Phone No. _____

7. CONTACT INFO
Name Alex Varr
E-mail Alex@AlexElectric.net
Phone No. 305-8888830

8. LEGAL/USE/WORK VALUE
Folio No. 05- _____ No. of Units _____
Lot ____ Block ____ Subdivision _____
Current Use of Property _____
Description of Work Upgrade Electrical Service
Square FT. _____ Linear FT. _____
Work Value 2000.00 Building Value _____
Flood Zone _____ Base Flood Elevation _____

Application is hereby made to obtain a permit to do the work and/or installations as indicated. I certify that no work or installation has commenced prior to the issuance of a permit and that all work will be performed to meet the standards of all laws regulating construction in this jurisdiction. I understand that a separate permit must be secured for Electrical, Plumbing, Signs, Wells, Pools, Furnaces, Boilers, Heaters, Tanks, Air Conditioning, Driveways, Portable Storage Units, etc.
Owner's Affidavit: I certify that all the foregoing information is accurate and that work will be done in compliance with all applicable laws regulating construction and zoning.

NOTICE REGARDING BUILDING PERMIT APPLICATIONS

The Completion and submission of a Building Permit Application is a requirement of securing a City Building Permit. The City will rely upon the information contained in the Application in determining whether a City Building Permit should be issued. The submission of inaccurate, misleading or misrepresented information in the Application shall subject the Building Permit to denial, suspension or revocation, and the individual applying for the permit, to all appropriate fines, penalties and other punishments authorized by law. KINDLY GOVERN YOURSELF ACCORDINGLY.
WARNING TO OWNER: YOUR FAILURE TO RECORD A NOTICE OF COMMENCMENT MAY RESULT IN YOU PAYING TWICE FOR IMPROVMENTS TO YOUR PROPERTY. IF YOU INTEND TO OBTAIN FINANCING, CONSULT WITH YOUR LENDER OR AN ATTORNEY BEFORE RECORDING YOUR NOTICE OF COMMENCEMENT.

OWNER INFORMATION
X Aillette A. Rodriguez Diaz X [signature]
PRINT NAME OWNERS SIGNATURE
SWORN TO AND SUBSCRIBED BEFORE ME BY PRINT NAME
X
WHO IS PERSONALLY KNOWN TO ME OR PRODUCED
As identification, this _____ day of _____ 20__
Notary's Signatures _____
Printed Name of Notary _____

Notary Public State of Florida
Orlando Pascual
My Commission GG 243955
Expires 08/24/2022

QUALIFIER INFORMATION
Alex Varr [signature]
PRINT NAME QUALIFIERS SIGNATURE
SWORN TO AND SUBSCRIBED BEFORE ME BY PRINT NAME
WHO IS PERSONALLY KNOWN TO ME OR PRODUCED
As identification, this _____ day of _____ 20__
Notary's Signatures _____
Printed Name of Notary _____

Notary Public State of Florida
Orlando Pascual
My Commission GG 243955
Expires 08/24/2022

DO NOT WRITE BELOW – FOR OFFICE USE ONLY

✓	TRADE	APPROVED/DATE	DISAPPROVED/DATE
	Zoning		
	Structural		
	Building		
	Electrical		
	Mechanical		
	Plumbing		
	Roofing		
	Flood		
	Publics Works		

APPLICATION INCLUDES	FEES $	.00
Zoning		
Structural		
Base Fee	125	00
Scanning	5	00
Technology	12.	50
Rework		
Violation		
DBPR/DCA	4	00
Code Compliance	1.	20
(-) Upfront Fee	125	00
Balance Due	22.	70

Total 147.70

Revised 12/30/2015

IN THE CIRCUIT COURT OF THE ELEVENTH JUDICIAL CIRCUIT, IN AND FOR MIAMI-DADE COUNTY, FLORIDA PROBATE DIVISION IN RE: ESTATE OF ALAN DIAZ, Deceased. Case No. 18-003326 CP02 Section 04	E-4

LETTERS OF ADMINISTRATION

TO ALL WHOM IT MAY CONCERN

WHEREAS, ALAN DIAZ a resident of Miami Dade County, Florida, died on July 3, 2018 ("Decedent"), owning assets in the State of Florida, and

WHEREAS, AILLETTE A. RODRIGUEZ has/have been appointed personal representative(s) ("Personal Representative(s)") of the Decedent's estate ("Decedent's Estate") and has/have performed all acts prerequisite to issuance of Letters of Administration in the estate,

NOW, THEREFORE, I, the undersigned circuit judge, declare AILLETTE A. RODRIGUEZ, duly qualified under the laws of the State of Florida to act as Personal Representative(s) of Decedent's Estate, with full power to administer the Estate according to law; to ask, demand, sue for, recover and receive the property of the Decedent; to pay the debts of the Decedent as far as the assets of the Estate will permit and the law directs; and to make distribution of the Estate according to law.

These Letters of Administration are subject to the following restrictions:

- This Estate must be closed within 12 months, unless it is contested or its closing date is extended by court order.
- These letters do not authorize entry into any safe deposit box without further court order.
- The Personal Representative(s) shall place all liquid assets in a depository designated by the Court pursuant to the Section 69.031, Florida Statutes ("Depository"). This is a frozen account. No funds can be withdrawn without a court order.
- Attorney of Record shall file Receipt of Assets by Depository within thirty days from the issuance of these letters.
- These letters do not authorize the sale, encumbrance, borrowing, or gifting of any Estate assets without a special court order.
- If Florida real estate is sold, per court order, a closing statement shall be filed, and the sale's net proceeds shall be placed in the Depository.
- Inventory shall be filed within 60 days.

DONE AND ORDERED in Chambers at Miami-Dade County, Florida, on 01/16/19.

Celeste Hardee Muir

CELESTE HARDEE MUIR

CIRCUIT COURT JUDGE

No Further Judicial Action Required on THIS
MOTION/PETITION
CLERK TO RECLOSE CASE IF POST JUDGMENT

The parties served with this Order are indicated in the Florida Courts E-Filing Portal "Notice of Service of Court Documents" email confirmation. The movant/petitioner shall IMMEDIATELY serve a true and correct copy of this Order, by mail, facsimile, email or hand-delivery, to all parties/counsel of record for whom service is not indicated in the "Notice of Service of Court Documents" email confirmation, and file proof of service with the Clerk of Courts.

OFFICE OF THE PROPERTY APPRAISER

Summary Report

Generated On : 10/31/2019

Property Information	
Folio:	05-3118-016-1590
Property Address:	200 N ESPLANADE DR Miami Springs, FL 33166-4412
Owner	ALAN DIAZ EST OF
Mailing Address	200 N ESPLANADE DR MIAMI SPRINGS, FL 33166-4412
PA Primary Zone	0400 SGL FAMILY - 901-1200 SQF
Primary Land Use	0101 RESIDENTIAL - SINGLE FAMILY : 1 UNIT
Beds / Baths / Half	2 / 1 / 0
Floors	1
Living Units	1
Actual Area	1,584 Sq.Ft
Living Area	1,210 Sq.Ft
Adjusted Area	1,288 Sq.Ft
Lot Size	7,500 Sq.Ft
Year Built	Multiple (See Building Info.)

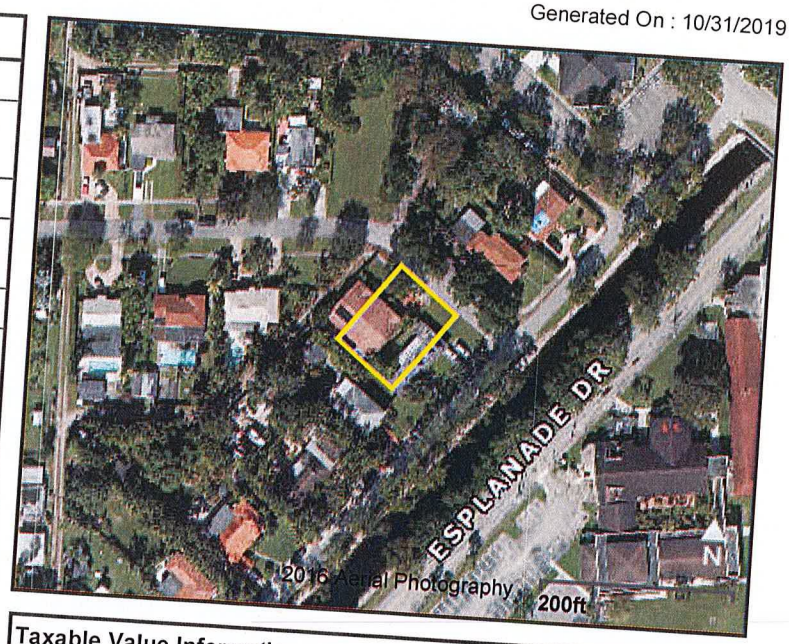

Assessment Information			
Year	2019	2018	2017
Land Value	$168,000	$168,000	$159,750
Building Value	$89,645	$96,600	$96,600
XF Value	$1,993	$2,017	$2,042
Market Value	$259,638	$266,617	$258,392
Assessed Value	$259,638	$138,988	$136,130

Taxable Value Information			
	2019	2018	2017
County			
Exemption Value	$0	$50,000	$50,000
Taxable Value	$259,638	$88,988	$86,130
School Board			
Exemption Value	$0	$25,000	$25,000
Taxable Value	$259,638	$113,988	$111,130
City			
Exemption Value	$0	$50,000	$50,000
Taxable Value	$259,638	$88,988	$86,130
Regional			
Exemption Value	$0	$50,000	$50,000
Taxable Value	$259,638	$88,988	$86,130

Benefits Information				
Benefit	Type	2019	2018	2017
Save Our Homes Cap	Assessment Reduction		$127,629	$122,262
Homestead	Exemption		$25,000	$25,000
Second Homestead	Exemption		$25,000	$25,000

Note: Not all benefits are applicable to all Taxable Values (i.e. County, School Board, City, Regional).

Sales Information			
Previous Sale	Price	OR Book-Page	Qualification Description
12/01/1986	$60,000	13114-2660	Sales which are qualified
02/01/1985	$68,500	12431-2385	Sales which are qualified

Short Legal Description
CINEMA PARK-COUNTRY CLUB ESTS
ADDN
PB 17-2
SELY 1/2 LOTS 1 & 2 BLK 58
LOT SIZE 100.000 X 75

ne Office of the Property Appraiser is continually editing and updating the tax roll. This website may not reflect the most current information on record. The Property Appraiser nd Miami-Dade County assumes no liability, see full disclaimer and User Agreement at http://www.miamidade.gov/info/disclaimer.asp

ersion:

tps://www8.miamidade.gov/Apps/PA/propertysearch/

CITY OF MIAMI SPRINGS
201 Westward Drive,
Miami Springs, FL 33166

AFFIDAVIT OF COMPLIANCE

I _____, the owner of 200 Esplanade Dr understand that I may not receive a final inspection on any new permits until all the expired permits or cases below are addressed in full.

Permit/Code Compliance Case No.	Description
03-1016	Replace Front Door
04-606	Slab

I as the owner understand that the listed permits and code compliance cases above are open and might delay me from receiving any final inspections on any new permit applications under my address. I will be addressing the permit(s) and/or code compliance case(s) within the six months of any newly issued permit.

OWNER

PRINT NAME: Arlette Rodriguez-Diaz

SIGNATURE: _____

STATE OF FLORIDA)
COUNTY OF MIAMI-DADE)
SWORN TO AND SUBSCRIBED BEFORE ME
THIS 4 DAY OF Nov, 20 19
BY Orlando Pascual

NOTARY SIGNATURE _____

SEAL:

Notary Public State of Florida
Orlando Pascual
My Commission GG 243955
Expires 08/24/2022

RECEIVED
NOV 0 7 2019
BY:

OFFICE COPY
CITY OF MIAMI SPRINGS

ALEX ELECTRIC SERVICES
2245 WEST 10 CT.
HIALEAH, FL 33010

ALEXANDER VARELA
OWNER/QUALIFIER

EC # 13001444
PH# 305-888-8830

OWNER NAME: AILLETE A. RODRIGUEZ
ADDRESS: 200 ESPLANADE DR
MIAMI SPRING, FL 33166

SCOPE OF WORK
NEW 200AMP SERVICE

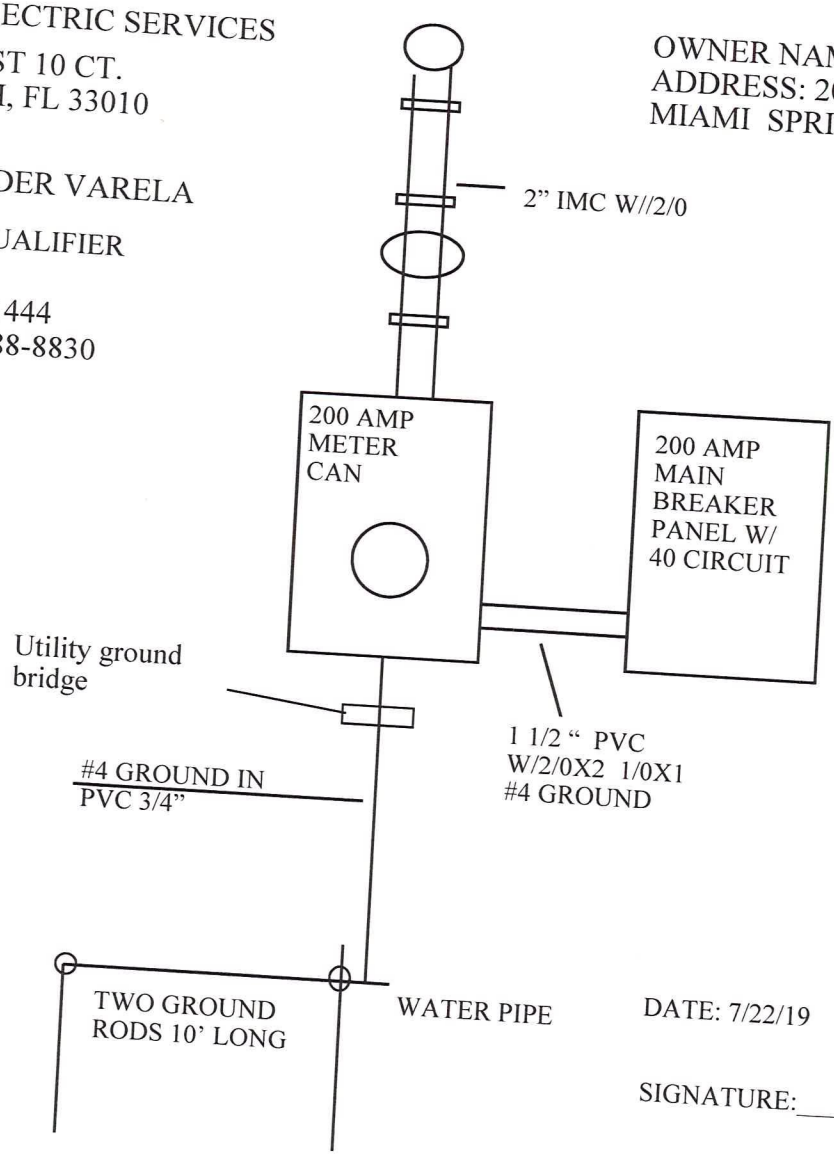

CITY OF MIAMI SPRINGS
APPROVED
FOR PERMIT ONLY
BUILDING INSPECTOR
PLUMBING INSPECTOR
ELECTRICAL INSPECTOR 11-8-19
MECHANICAL INSPECTOR
ZONING
STRUCTURAL

DATE: 7/22/19

SIGNATURE:

EC13014440
10-31-19

Job Name: AILLETTTE A. RODRIGUEZ 200 ESPLANADE DR

Optional Calculation Method

Article 220.80

1 Must be a 3 wire service, 1 Phase
2 Voltages allowed 120/240, 120/208
3 **Ampacity greater than 100 amps**
4
5

Qty.	Description	Watts	Subtotal
976	Square Feet of Living Space	3	2928
1	Small Appliance Cirduits	1500	1500
1	refrigerator	1750	1250
1	Range	12000	12000
1	water Heater	4500	4500
1	Dishwasher	1250	1250
1	microwave	1250	1250
2	bath Room GFCI	1500	3000
1	Breakers 20A	1250	1250
1	Sprinkler pump	1750	1750
1	Laundry washer	1500	1500
1	Dryer	3400	3400
	Subtotal Residence		35578
	24v Pool Lights	150	0
	Blower	1440	0
	Pool Pump	1750	0
	Garage Door	1500	0
	Aqua Rite / Auto Pilot	350	0
	Subtotal Sprinkler + Res. Lgts. & Appl.		35578
	First 10,000 watts @ 100%		10000
35578	*minus 10,000 X 40% = Remainder*		10231.2
	Subtotal Demand Watts		20231.2

Number of Lighting Circits Required in Panel

2	15	amp circuits
1	20	amp circuits

Optional method must use 12000 for ranges

1/2 HP @ 120/240Volts is 1176 Watts
3/4 HP 120/240volts is 1656 Watts
1HP @ 120/240 Volts is 1920 Watts
11/2HP @ 120/240 Volts is 2400 Watts
2 HP @ 120/240 Volts is 2880 Watts

RECEIVED
NOV 07 2019
BY: .....

					0		
Noncoincidental Loads	1	A/C Compressor#1	7000	7000	10000	0.00	Amps
	1	Heat Strips #1	10000	10000		41.67	Amps
Noncoincidental Loads					0		
		Heat Strips #2				0.00	Amps
Noncoincidental Loads		A/C Compressor#3			0		
		Heat strips#3				0.00	Amps
					0		
		Pool Heat Pump		12000	0	0.00	Amps
		Subtotal A/C Cooling & Heating Equipment			10000	0.00	Amps

○ Residential Derating

Total Watts

30231.200

Total Amps

125.96

EC-13004444
1038-ic

PERMIT ROUTING LOG SHEET

CITY OF MIAMI SPRINGS

Work Site Address 200 Esplanade Dr

Owner's Name Ailette Loangwee

Contractor's Name Alex Electric Service

Permit No. 20-130

Date Received 11/07/19

Contact Phone No. (305) 888-8830

Comments: Upgrade Electrical Sy

Reviewer	Approved	Date	Disapproved	Date
☐ Zoning $_____				
☐ Mechanical $_____				
☑ Electrical $_____	AM	11-8-19		
☐ Plumbing $_____				
☐ Public Works $_____				
☐ Structural $_____				
☐ Building ☐ Roofing $_____				
Building Specialist (Comments)				

City of
Miami Springs
Florida

CERTIFICATE OF RE-OCCUPANCY

The following property was inspected on July 28, 2021. It has been determined that the subject premises is in compliance with the single family residential occupancy regulations of the City Code of Ordinances and that the dwelling is designed, configured, and being used for single-family residential purposes only.

Address: 200 N ESPLANADE DR., MIAMI SPRINGS, FL 33166 Folio # 05-3118-016-1590

Legal Description: CINEMA PARK-COUNTRY CLUB ESTS ADDN PB 17-2
SELY 1/2 LOTS 1 & 2 BLK 58 LOT SIZE 100.000 X 75 OR 13114-2660 1286 1

This certificate of Re-Occupancy shall remain effective for forty-five (45) days from issuance. This certificate shall expire and be of no force or affect if not recorded on or before September 11, 2021.

Upon the closing of any transfer or conveyance of title of any single-family residential premises issued a certificate pursuant to the provisions hereof, this original Re-Occupancy Certificate shall be recorded in the Public Records of Miami-Dade County, Florida, along with the deed or other title conveyance document for the subject premises.

R. Novo
Code Compliance Officer

July 28, 2021
Issuance Date

Rosemary Novo
State of Florida
County of Miami-Dade
Sworn to and subscribed before me this 28th day of July, 2021
By:

Notary Public State of Florida
Sandra Duarte
My Commission GG 278770
Expires 11/25/2022

Signature of Notary Public, State of Florida

Sandra Duarte
(Notary's name printed, stamped or typed)
Personally known: XX
Produced Identification: _____
Type of Identification produced: _____

This instrument prepared by City of Miami Springs, 201 Westward Drive, Miami Springs, Florida 33166, Phone (305) 805-5030

21.0417

CITY OF MIAMI SPRINGS
APPLICATION FOR A CERTIFICATE OF
RE-OCCUPANCY INSPECTION

Address: 200 N. Esplanade Dr. Miami Springs, FL. 33166 Folio# 05-3118-016-1590

Person to contact for inspection: Aillette A. Rodriguez-Diaz

Telephone # 786-879-1581 Date of application 7/19/2021

Cellular # ↑ E-mail Aillette0530@GMAIL.COM.

Buyer's Name(s) JOVANY JIMENEZ and ABABAR SARA PREVAL
PLEASE PRINT CLEARLY

Seller's Name(s) AILLETTE A. RODRIGUEZ-DIAZ
PLEASE PRINT CLEARLY

CITY OF MIAMI SPRINGS BUILDING DEPARTMENT

Existing Zoning:

JUL 23 2021

RECEIVED

Legal Description Southeasterly ½ Lots 1 & 2, Block 58, CINEMA PARK ADDITION TO COUNTRY CLUB ESTATES according to the Plat thereof as recorded in Plat 17, Page 2, of the Public Records of Miami-Dade Count FLORIDA.

THE BUILDING MAY ONLY BE LEGALLY OCCUPIED AS A SINGLE FAMILY RESIDENCE.

A RE-OCCUPANCYCERTIFICATE SHALL NOT CONSTITUTE ANY REPRESENTATION OR WARRANTY AS TO THE CONDITION, OR ANY ASPECT OF SUCH CONDITION, OF THE SUBJECT PREMISES, FOR WHICH THE CERTIFICATE WAS ISSUED. THE CITY REVIEW AND INVESTIGATION MADE IN CONNECTION WITH THE ISSUANCE OF ANY RE-OCCUPANCY CERTIFICATE IS NEITHER A STRUCTURAL, ELECTRICAL, PLUMBING, MECHANICAL OR ANY OTHER SUBSTANTIVE INSPECTION OF THE STRUCTURE ON ANY PROPERTY AND DOES NOT REPRESENT THAT THE PREMISES CONFORMS TO THE REQUIREMENTS OF THE CODE OF ORDINANCES, INCLUDING, BUT NOT LIMITED TO, THE BUILDING AND TECHNICAL CODE PROVISIONS ADOPTED BY THE CITY.

INTERESTED PERSONS ARE ADVISED AND ENCOURAGED TO OBTAIN A PRIVATE INSPECTION OF THE PREMISES IN ORDER TO DETERMINE THE CONDITION THEREOF.

Wed. 28th
11AM Confirmed

ATTENTION
UP TO 10 DAYS FROM THE DATE OF THIS APPLICATION TO
ON. PLEASE FILE YOUR APPLICATION ACCORDINGLY

CITY OF MIAMI SPRINGS
CERTIFICATE OF RE-OCCUPANCY
DISCLOSURE STATEMENT

Address: 200 N. Esplanade Dr. Miami Springs, FL 33166 Folio #: 05-3118-0116-1590

Buyer's Name Jovany Jimenez and Ambar Sara Preval Telephone# _____

Co-Buyer's Name _____ Telephone# _____

Seller's name Ailette Rodriguez-Diaz Telephone# 786-879-1581

Co-Seller's Name _____ Telephone# _____

The Seller does hereby disclose to the Buyer that a Certificate of Re-Occupancy is required according to the **CITY OF MIAMI SPRINGS, FLORIDA, CODE SECTION 102.**

CITY OF MIAMI SPRINGS, FLORIDA, CODE SECTION 102 provides that a Certificate of Re-Occupancy, if issued, shall state that the City has inspected the dwelling and determined that the dwelling complies with the residential occupancy regulations of the zoning district on the property wherein the dwelling unit is located.

Seller's Signature:

Print Name: Ailette A. Rodriguez Diaz
Date Signed: 07-19-2021
Sworn to and subscribed before me by:
Ailette A. Rod. Diaz who is
Personally known to me: _____ or
Produced ID #: FDL 81-690-0
This 19 day of July 2021

Notary's Signature
Emily Murillo
Notary's printed name, stamped or typed

EMILY MURILLO
MY COMMISSION # HH 123670
EXPIRES: April 28, 2025
Bonded Thru Notary Public Underwriters

Buyer's Signature:

Print Name: Jovany Jimenez
Date Signed: 7/21/21
Sworn to and subscribed before me by:
Jovany Jimenez who is
Personally known to me: ✓ or
Produced: ID#: _____
This 21 day of July 2021

Notary's Signature
Ana Meilyn Zuferri
Notary's printed name, stamped or typed

ANA MEILYN ZUFERRI
Commission # HH 007194
Expires July 18, 2024
Bonded Thru Budget Notary Services

Co-Seller(s) Signature:

Print Name: _____
Date Signed: _____
Sworn to and subscribed before me by:
_____ who is
Personally known to me: _____ or
Produced ID #: _____
This _____ day of _____ 20___.

Notary's Signature
Notary's printed name, stamped or typed

Co-Buyer(s) Signature:

Print Name: Ambar Preval
Date Signed: 7/21/21
Sworn to and subscribed before me by:
Ambar Preval who is
Personally known to me: ✓ or
Produced: ID#: _____
This 21 day of July 2021

Notary's Signature
Ana Meilyn Zuferri
Notary's printed name, stamped or typed

ANA MEILYN ZUFERRI
Commission # HH 007194
Expires July 18, 2024
Bonded Thru Budget Notary Services

OFFICE OF THE PROPERTY APPRAISER

Summary Report

Generated On : 7/23/2021

Property Information	
Folio:	05-3118-016-1590
Property Address:	200 N ESPLANADE DR Miami Springs, FL 33166-4412
Owner	AILLETTE A RODRIGUEZ DIAZ
Mailing Address	2655 COLLINS AVE 508 MIAMI BEACH, FL 33140 USA
PA Primary Zone	0400 SGL FAMILY - 901-1200 SQF
Primary Land Use	0101 RESIDENTIAL - SINGLE FAMILY : 1 UNIT
Beds / Baths / Half	2 / 1 / 0
Floors	1
Living Units	1
Actual Area	1,584 Sq.Ft
Living Area	1,210 Sq.Ft
Adjusted Area	1,288 Sq.Ft
Lot Size	7,500 Sq.Ft
Year Built	Multiple (See Building Info.)



Assessment Information			
Year	2021	2020	2019
Land Value	$195,000	$168,000	$168,000
Building Value	$89,645	$89,645	$89,645
XF Value	$1,943	$1,968	$1,993
Market Value	$286,588	$259,613	$259,638
Assessed Value	$286,588	$259,613	$259,638

Benefits Information				
Benefit	Type	2021	2020	2019
Note: Not all benefits are applicable to all Taxable Values (i.e. County, School Board, City, Regional).				

Short Legal Description
CINEMA PARK-COUNTRY CLUB ESTS
ADDN
PB 17-2
SELY 1/2 LOTS 1 & 2 BLK 58
LOT SIZE 100.000 X 75

Taxable Value Information	2021	2020	2019
County			
Exemption Value	$0	$0	$0
Taxable Value	$286,588	$259,613	$259,638
School Board			
Exemption Value	$0	$0	$0
Taxable Value	$286,588	$259,613	$259,638
City			
Exemption Value	$0	$0	$0
Taxable Value	$286,588	$259,613	$259,638
Regional			
Exemption Value	$0	$0	$0
Taxable Value	$286,588	$259,613	$259,638

Sales Information

Previous Sale	Price	OR Book-Page	Qualification Description
09/18/2020	$100	32182-3861	Corrective, tax or QCD; min consideration
06/18/2020	$100	31992-2776	Trustees in bankruptcy, executors or guardians
12/01/1986	$60,000	13114-2660	Sales which are qualified
02/01/1985	$68,500	12431-2385	Sales which are qualified

The Office of the Property Appraiser is continually editing and updating the tax roll. This website may not reflect the most current information on record. The Property Appraiser and Miami-Dade County assumes no liability, see full disclaimer and User Agreement at http://www.miamidade.gov/info/disclaimer.asp

Version:

City of Miami Springs
Certificate of Re-Occupancy

Property Address: 200 N. Esplanade Dr. Miami Springs, FL 33166
Date: 7-19-2021
Current Property Owner: AILLETTE A. RODRIGUEZ-DIAZ

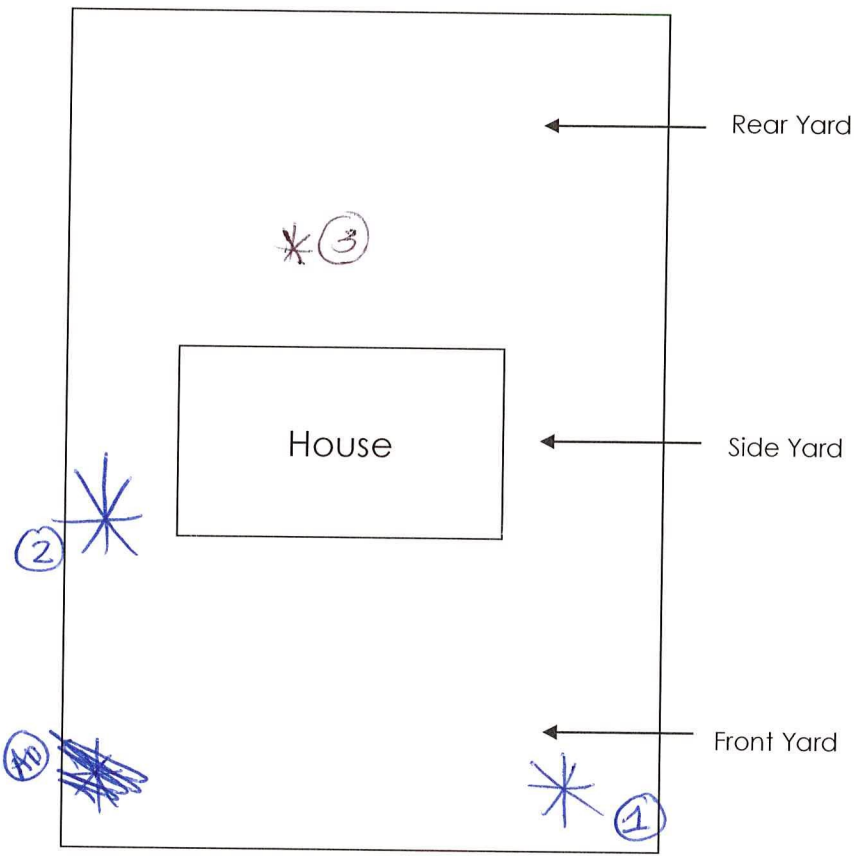

Please show all trees on property. Mark tree locations and number all the X's, then list the trees to the right number and the approximate size of the tree.

Tree #	Tree Type	Approx. Size
1	Approx Tropical	Umbrella
2	Unk	
3	Unk	

BUILDING PERMIT

City of Miami Springs

201 Westward Drive
Miami Springs, Florida 33166
(305) 805-5030

PERMIT NUMBER
RES21-1143

PERMIT TYPE: **BUILDING** PERMIT SUB TYPE : **ADDITION**	Issued Date: **5/18/2022** Expired Date: **11/14/2022**	TAX MAP NO: **05-3118-016-1590** BLDG USE GROUP:
JOB ADDRESS: **200 ESPLANADE DRIVE** DESCRIPTION: **ADDITION TO RESIDENCE AND OVERALL REMODELING TO EXIST RES.**		
ZONED AS: TOTAL WORK VALUE:**$0.00**	TOTAL SQFT:**0** TYPE OF CONSTRUCTION:	
OWNER: **JOVANY JIMENEZ & AMBAR SARA PREVAL** MAILING ADDRESS: **200 N ESPLANADE DR MIAMI SPRINGS, FL 33166**		PHONE: **(786)587-7391** FAX:
CONTRACTOR: MAILING ADDRESS: ,		PHONE: FAX:

FEES

DESCRIPTION	ACCOUNT	QUANTITY	PAID AMOUNT
BUILDING PERMIT FEE	145-0000-322.00-00	0	$5275.00
CODE COMPLIANCE	145-0000-217-40-00	0	$108.00
DBPR	145-0000-217.60-00	0	$81.00
DCA	145-0000-217-50-00	0	$54.00
MISCELLANEOUS PERMIT FEE	145-0000-329.09-00	0	$100.00
RESIDENTIAL REVIEW	001-0000-329.13-00	0	$100.00
RESIDENTIAL REVIEW	145-0000-329.06-00	0	$100.00
SCANNING	145-0000-220.27-00	0	$187.00
TECHNOLOGY	145-0000-220.26-00	0	$540.00
UPFRONT FEE	145-0000-322.00-00	0	$125.00
			TOTAL: $6,670.00

ALL WORK TO CONFORM TO THE CURRENT EDITION OF THE INTERNATIONAL BUILDING CODE (IBC).
NEXT DAY INSPECTION REQUESTS MUST BE IN BEFORE 3 P.M.
NEXT DAY INSPECTION BY BLD OFFICICAL MUST BE IN BY 12 NOON

Building Official:

Issued By: **EMILY MURILLO**

CITY OF MIAMI SPRINGS

BUILDING DEPARTMENT
201 Westward Drive, Second Floor
Miami Springs, FL 33166
Office: 305-805-5030 Fax: 305-805-5036
www.miamisprings-fl.gov

MIAMI SPRINGS
At the Heart of It All!

Date: 12/10/21 Clerk: EM

☑ Master Permit 21-1143

JOB ADDRESS 200 Esplanade Dr

PERMIT APPLICATION

☐ Sub-Permit

1. OWNER INFORMATION
Owner AMBAR PREVAL
Address 200 N. ESPLANADE Dr.
City MIAMI SPRINGS ST FL Zip 33166
Driver License No. /I.D.
Phone No. 786 587 7391

2. CONTRACTOR INFORMATION
Company Name
Qualifier Name H/O
Address
City ST Zip
Lic. No. Phone No.

3. PERMIT TYPE (Choose only One)
☒ Building
☐ Electrical
☐ Mechanical
☐ Plumbing/Gas
☐ Sign
☐ Roofing

4. CHANGE TO AN EXISTING PERMIT (Choose only One)
☐ Change Contractor
☐ Extension
☐ Renewal
☐ Shop Drawing
☐ Lost Plans

5. TYPE OF IMPROVEMENT (Choose only One)
☐ New Construction
☒ Addition Attached
☐ Alteration Interior
☐ Alteration Exterior
☐ Repair/Replace
☐ Demolition/Partial
☐ Re-roof
☐ Driveway
☐ Fence
☐ Window
☐ Door
☐ Shutters
☐ Pool
☐ Shed
☐ Other:

6. ARCHITECT/ENGINEER INFO
Name GUILLERMO R. GONZALEZ
Address 13400 SW 134th AVE
City MIAMI ST FL Zip Code 33186
Lic. No. 13960 Discipline R.A.
Phone No. 305 484 8171

7. CONTACT
Name AMBAR PREVAL
E-mail AMBARPREVAL@gmail.com
Phone No. 786 587 7391

8. LEGAL/USE/WORK VALUE
Folio No. 05-3118-016-1590 No. of Units 1
1/2 Lot 1&2 Block 58 Subdivision CINEHA PARK COUNTRY CLUB ESTATES ADDITION
Current Use of Property Single Family Res
Description of Work Addition to Residence and over all Remodeling to Exist. Res.
Square FT. NEW 467 ft Linear FT. 77.58
Work Value 180,000 >=656 Building Value $90,000
Flood Zone AH-7.0' Base Flood Elevation 7.0'

Application is hereby made to obtain a permit to do the work and/or installations as indicated. I certify that no work or installation has commenced prior to the issuance of a permit and that all work will be performed to meet the standards of all laws regulating construction in this jurisdiction. I understand that a separate permit must be secured for Electrical, Plumbing, Signs, Wells, Pools, Furnaces, Boilers, Heaters, Tanks, Air Conditioning, Driveways, Portable Storage Units, etc.
Owner's Affidavit: I certify that all the foregoing information is accurate and that work will be done in compliance with all applicable laws regulating construction and zoning.

NOTICE REGARDING BUILDING PERMIT APPLICATIONS

The completion and submission of a Building Permit Application is a requirement of securing a City Building Permit. The City will rely upon the information contained in the Application in determining whether a City Building Permit should be issued. The submission of inaccurate, misleading or misrepresented information in the Application shall subject the Building Permit to denial, suspension or revocation, and the individual applying for the permit to all appropriate fines, penalties and other punishments authorized by law. KINDLY GOVERN YOURSELF ACCORDINGLY.
WARNING TO OWNER: YOUR FAILURE TO RECORD A NOTICE OF COMMENCMENT MAY RESULT IN YOU PAYING TWICE FOR IMPROVMENTS TO YOUR PROPERTY. IF YOU INTEND TO OBTAIN FINANCING, CONSULT WITH YOUR LENDER OR AN ATTORNEY BEFORE RECORDING YOUR NOTICE OF COMMENCEMENT.

EMILY MURILLO
MY COMMISSION # HH 123670
EXPIRES: April 28, 2025
Bonded Thru Notary Public Underwriters

Jovany Jimenez
PRINT NAME OWNERS SIGNATURE
SWORN TO AND SUBSCRIBED BEFORE ME BY: (PRINT NAME)
Jovany Jimenez
BY MEANS OF [✓] PHYSICAL PRESENCE OR [ ] ONLINE NOTARIZATION AND PRODUCED
FLDL
As identification, this 10 day of December 2021
Notary's Signatures
Printed Name of Notary Emily Murillo

QUALIFIER INFORMATION
PRINT NAME OWNERS SIGNATURE
SWORN TO AND SUBSCRIBED BEFORE ME BY: (PRINT NAME)
BY MEANS OF [ ] PHYSICAL PRESENCE OR [ ] ONLINE NOTARIZATION AND PRODUCED
As identification, this day of 20
Notary's Signatures
Printed Name of Notary

DO NOT WRITE BELOW – FOR OFFICE USE ONLY

✓	TRADE	APPROVED/DATE	DISAPPROVED/DATE
	Zoning	CH 12/16/21	
	Structural	OK	[illegible] 2/28/22 4/13/22 5/11/22
	Building	UF 5/12/22	[illegible] 1/9/22
	Electrical		
	Mechanical	[illegible] 2.17.22	
	Plumbing	[illegible] 02-12-22	
	Roofing		
	Flood		
	Publics Works		

81/54

APPLICATION INCLUDES	FEES $	.00
Zoning	100	00
Structural	100	00
Base Fee	5400	00
Scanning	187	00
Technology	540	00
Rework	100	00
Violation		
DBPR/DCA	135	00
Code Compliance	108	00
(-) Upfront Fee	125	00
Balance Due	6445	00

Total: 6,670.00

Revised 08/27/2021

CITY OF MIAMI SPRINGS

BUILDING AND CODE COMPLIANCE DEPARTMENT

201 Westward Drive
Miami Springs, FL 33166

Tel: 305-805-5030
Fax: 305-805-5036

INSTRUCTIONS TO OWNER-BUILDERS

Pursuant to Florida Statute 489.103 (7) owners of real property when acting as their own contractor and providing all material supervision themselves, when building or improving one-family residences or commercial property, shall be provided with the following disclosure statement by the local permitting agency.

State law requires construction to be done by licensed contractors. You have applied for a permit under an exemption to that law. The exemption allows you, as the owner of your property, to act as your own contractor with certain restrictions even though you do not have a license. You must provide direct, onsite supervision of the construction yourself. You may build or improve a commercial building, provided your costs do not exceed $25,000. ***The building or residence must be for your own use or occupancy. It may not be built or substantially improved for sale or lease. If you sell or lease a building you have built or substantially improved yourself within 1 year after the construction is complete, the law will presume that you built or substantially improved it for sale or lease, which is a violation of this exemption.*** *You may not hire an unlicensed person to act as your contractor or to supervise people working on your building. It is your responsibility to make sure that people employed by you have licenses required by state law and by county or municipal licensing ordinances. You may not delegate the responsibility for supervising work to a licensed contractor who is not licensed to perform the work that is being done. Any person working on your building who is not licensed must work under your direct supervision and must be employed by you, which means that you must deduct F.I.C.A. and withholding tax and provide workers' compensation for that employee, all as prescribed by law. Your construction must comply with all applicable laws, ordinances, building Codes, and zoning regulations.*

PROOF OF OWNERSHIP - Prior to a building permit being issued to you, you must submit proof of ownership of the land concerned in the application in the form of a recorded deed, showing you own the property, or a copy of mortgage or warranty deed of the land, or a Dade County tax receipt, statement to contain legal description of property and indicate property is in your name. Legal description and name on document of proof must correspond to the name and legal description on the application.

RESPONSIBILITY - You will be responsible for all work done by your day labor employees, and you must either employ licensed contractors or persons to be paid on an hourly or per diem basis. Anyone contracting (including labor) with you, verbally or in writing, on a fixed fee basis for any work, who is not properly licensed, will be subject to a fine of $500 pursuant to Florida Statute 489.127 (4) (c) and/or imprisonment for up to one year pursuant to Florida statute 489.127.

INSURANCE - You should be advised that if your labor employees cause any damage to persons or property, or if any of your day labor employees are injured on the job, YOU ARE LIABLE. Your regular home insurance policy ordinarily does not cover this type of liability.

WITHHOLDING TAXES - You should be advised to investigate your responsibility for withholding Social Security, Federal and State Unemployment Insurance Taxes from the wages of employees working for you on the proposed construction, and for making returns thereof to the proper agency.

DEMOLITION WORK - In addition to meeting Florida Building Code requirements stated above, you are responsible for disconnecting all utilities, including water, sewer, septic tank, electrical service, gas, telephone, cable TV, etc., prior to commencing demolition. You are also required to obtain a permit from the State of Florida Department of Health and Rehabilitative Services in order to abandon any septic tank that is on the property.

Notice: Separate permits are required for electrical, septic tank abandonment, plumbing, roofing and mechanical work.

I, Jovanny Jimenez the owner of the property described as 200 Esplanade Dr Miami Springs, FL 33166, do hereby certify that I have read the foregoing instructions, and am aware of my responsibilities and liabilities for a building permit for construction work on the above described property. **HAVING READ THE ABOVE STATE LAWS AND REQUIREMENTS, I UNDERSTAND AND AGREE THAT I WILL ABIDE BY SUCH LAWS AND REQUIREMENTS.**

Notary Signature | Property Owner | Date 12/10/21

The foregoing instrument was acknowledged before me this 10 day of December 21 by Jovanny Jimenez

( ) is personally known to me
( ) has produced EMILY MURILLO as identification.

EMILY MURILLO
MY COMMISSION # HH 123670
EXPIRES: April 28, 2025
Bonded Thru Notary Public Underwriters

Notary Public

Cash Register Receipt

City of Miami Springs

Receipt Number
194035

DESCRIPTION	ACCOUNT	QTY	PAID
PermitTRAK			**$6,445.00**
RES21-1143 Address: 200 ESPLANADE DRIVE APN: 05-3118-016-1590			**$6,445.00**
DCA AND DBPR AND CODE			$243.00
CODE COMPLIANCE	145-0000-217-40-00	0	$108.00
DBPR	145-0000-217.60-00	0	$81.00
DCA	145-0000-217-50-00	0	$54.00
MISCELLANEOUS FEES			$100.00
MISCELLANEOUS PERMIT FEE	145-0000-329.09-00	0	$100.00
RESIDENTIAL BUILDING PERMIT FEE			$5,275.00
BUILDING PERMIT FEE	145-0000-322.00-00	0	$5,275.00
SCANNING AND TECHNOLOGY			$727.00
SCANNING	145-0000-220.27-00	0	$187.00
TECHNOLOGY	145-0000-220.26-00	0	$540.00
STRUCTURAL REVIEW			$100.00
RESIDENTIAL REVIEW	145-0000-329.06-00	0	$100.00
TOTAL FEES PAID BY RECEIPT:194035			

Date Paid: Wednesday, May 18, 2022

Paid By: JOVANY JIMENEZ

Cashier: MBM

Pay Method: CHECK 1002

PERMIT ROUTING LOG SHEET

CITY OF MIAMI SPRINGS

Work Site Address 200 Esplanade Dr. Permit No. 21-1143

Owner's Name Ambar Preval Date Received 12/10/21

Contractor's Name H10 Contact Phone No. (786 587-7391

Reviewer	Approved Date	Disapproved Date	Comments: Addition
☑ Zoning $____	CH 12/16/21	CH 12/14/21 REWORK 12/14/21	SURVEY REQUIRED TABULAR SUMMARY IN COMPARATIVE FORMAT REQUIRED SEE SAMPLE DATA SHEET ATTACHED.
☑ Mechanical $____	RM 2.17.22		
☑ Electrical $____	OK MP 4/21/22	MP 2/16/22	Missing Receptacle's to Comply with NEC 210.52 SEE MARKINGS
☑ Plumbing $____	EC 02-12-22	EIA 1-19-21 REWORK 2/11/22	① W/MACHINE WET-VENT NOT TO CODE ② SHOW WATER HEATER DETAIL & LOCATION ON PLANS ③ SEE P-1 REDMARKS ON PLAN ③ PLEASE DON'T REMOVE REVIEW PAGE.
☐ Public Works $____		5/4/22 REWORK 05/05/22 4/19/22	
☑ Structural $____	OK	REWORK 04-12-2022	Provide Structural Calculation For complete review & see Plans
☑ Building ☐ Roofing $____	MP 5/12/22	4/19/22 REWORK 4/19/22 MP 5/17/22 REWORK 05/05/22	Provide Job cost. @ Further compliance w/flood may be required. Further comments may follow. SEE OTHER SIDE →
Building Specialist (Comments)	Jovani took set of plans on 01-31-2022		

3/22/22: Ambar took BOTH sets

04/26/22 - Jovany Jimenez took both sets of plans.

CITY OF MIAMI SPRINGS
BUILDING DEPARTMENT

MAR 09 2022

RECEIVED

Jovany Jimenez
Florida
U.S.A

ESTIMATE

 # EST-420212

Bill To
Jovany Jimenez

Estimate Date : 07 Mar 2022

#	Item & Description	Qty	Rate	Amount
1	New Roof	1.00	35,000.00	35,000.00
2	New Addition to house	1.00	5,000.00	5,000.00
3	Bathroom Three Remodel	1.00	10,000.00	10,000.00
4	Flooring & Tiles	1.00	14,000.00	14,000.00
5	Raise Floor	1.00	5,000.00	5,000.00
6	Outdoor terrace - Columns and finishes	1.00	3,000.00	3,000.00
7	Wall, and ceiling	1.00	10,000.00	10,000.00
8	interior and exterior Painting	1.00	5,000.00	5,000.00
9	~~Plumbing~~	1.00	8,000.00	8,000.00
10	~~Electric - Replace everything~~	1.00	8,000.00	8,000.00
11	~~Install windows and Doors~~	1.00	8,000.00	8,000.00
12	Dispose of Trash	1.00	700.00	700.00
			Sub Total	111,700.00
			Total	**$111,700.00**

Notes

Looking forward to your business.

POWERED BY ZOHO

CITY OF MIAMI SPRINGS
201 Westward Drive,
Miami Springs, FL 33166

AFFIDAVIT OF COMPLIANCE

I _____, the owner of **200 N ESPLANADE DR** understand that I may not receive a final inspection on any new permits until all the expired permits or cases below are addressed in full.

Permit/Code Compliance Case No.	Description
BP03-01016	EXPIRED PERMIT: WINDOWS & DOORS HOMEOWNER
BP04-00606	EXPIRED PERMIT: SLABS HOMEOWNER

I as the owner understand that the listed permits and code compliance cases above are open and might delay me from receiving any final inspections on any new permit applications under my address. I will be addressing the permit(s) and/or code compliance case(s) within the six months of any newly issued permit.

OWNER

PRINT NAME: _____

SIGNATURE: _____

STATE OF FLORIDA)
COUNTY OF MIAMI-DADE)
SWORN TO AND SUBSCRIBED BEFORE ME
THIS _____ DAY OF _____, 20_____
BY _____

NOTARY SIGNATURE _____

SEAL:

Guillermo Ramon Gonzalez RA.

9000 SW. 168th Avenue.
Miami, Florida 33186
Telephone: (305) 484-8171

REWORK

Miami Springs Building Department
201 Westward Drive
Miami Springs, Florida 33166

April 29, 2022

Owner: Ambar Preval
Project Address: 200 N. Esplanade Drive Miami Springs, Florida 33166
Application Number: 21-1143

Response Sheet To Building Dept. Comments

1. **Structural:** Mr. Rodriquez, Please see Attached structural calculations. The Idea for these calculations is to calculate the new walls, footings and beams and to make sure that existing walls are reinforced properly when adding the 2' height over existing concrete beams as shown on the plans and section B on A-5.
2. Please see special inspector form that has been attached to each set of plans.
3. Please see certification letter now attached to both sets of plans.
4. The reinforced masonry calculations are in calculations. Also please see sheet A-2 for new tie down reinforcement at existing front walls.
5. The roof diagram with zones is on revised sheet A-6. Also for your comment#9 is the revised note for terrace plywood ceiling.
6. Please see beam detail on bottom left of sheet A-5, where it shows compliance with ACI 318-14.
7. Please see the soil statement notes #1 & #2 on top of sheet A-2. The wording is arranged differently but it says the same as in your comment #7.
8. Please see the roof strap NOAs have been submitted and are attached to each set of plans. Also on top center of sheet A-5 is a gravity & uplift legend with specs.
9. See revised terrace section-B on sheet A-6 for ceiling plywood backing.
10. Please see new full wall section-A on A-2 & Section B on sheet A-6. & SECT.-B ON A-5
11. See this response sheet.
12. **Building:** revised sheet D-1 to show all areas affected by raising the floor slab. Also revised scope of work note. There is no overhead electrical line. It is underground service to nearby pole (sw.) by adjacent alley area, see site plan. See flood criteria notes on SP-1/D-1 & A-2. See window schedule on sheet A-4 for SHGC. Window & door NOAS under separate permit. Shower enclosure type & specs (note) is on sheet A-1 on floor plan next to new bath for master bedroom. Shower detail is on sheet P-1. See precast lintel noas attached.

NOTE: SEE REINFORCED MASONRY AT REAR OF STRUCTURAL CALCS.

Respectfully,

RA.# 13960
License Number



Signature, Date
Guillermo Ramon Gonzalez

Guillermo Ramon Gonzalez RA

9000 SW. 168th Ave. Miami, Florida 33196
Telephone: (305) 484-8171

REWORK

Miami Springs Building Department
201 Westward Drive
Miami Springs, Florida 33166

April 29, 2022

Owner: Ambar Preval
Project Address: 200 N. Esplanade Drive Miami Springs, Florida 33166
Application Number: 21-1143

Architect's Certification

I, Guillermo Ramon Gonzalez, certify that These new alterations and structural modifications will not affect the structural integrity of the existing building and it's structural members as per 2020-7th Edition (Existing buildings 907).

Thus I hereby certify that all work including the items mentioned above will be functional and in accordance with the approved plans and "F.B.C." 2020 -7th Edition.

Respectfully.

RA.# 13960
License Number

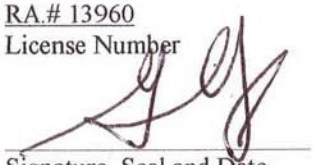

Signature, Seal and Date
Guillermo Ramon Gonzalez

OFFICE COPY
CITY OF MIAMI SPRINGS

MIAMI-DADE COUNTY

MIAMI-DADE COUNTY
PRODUCT CONTROL SECTION
11805 SW 26 Street, Room 208
Miami, Florida 33175-2474
T (786) 315-2590 F (786) 315-2599
www.miamidade.gov/economy

DEPARTMENT OF REGULATORY AND ECONOMIC RESOURCES (RER)
BOARD AND CODE ADMINISTRATION DIVISION

CITY OF MIAMI SPRINGS
BUILDING DEPARTMENT

NOTICE OF ACCEPTANCE (NOA)

DEC 10 2021
RECEIVED

Nu-Vue Industries, Inc.
1055 East 29 Street
Hialeah, Florida 33013

SCOPE: This NOA is being issued under the applicable rules and regulations governing the use of construction materials. The documentation submitted has been reviewed and accepted by Miami-Dade County RER-Product Control Section to be used in Miami Dade County and other areas where allowed by the Authority Having Jurisdiction (AHJ).

This NOA shall not be valid after the expiration date stated below. The Miami-Dade County Product Control Section (In Miami Dade County) and/or the AHJ (in areas other than Miami Dade County) reserve the right to have this product or material tested for quality assurance purposes. If this product or material fails to perform in the accepted manner, the manufacturer will incur the expense of such testing and the AHJ may immediately revoke, modify, or suspend the use of such product or material within their jurisdiction. RER reserves the right to revoke this acceptance if it is determined by Miami-Dade County Product Control Section that this product or material fails to meet the requirements of the applicable building code.

This product is approved as described herein and has been designed to comply with the Florida Building Code, including the High Velocity Hurricane Zone.

DESCRIPTION: Series NVTA, NVTAS, NVBH, NVUH, NVRT and NVTH Steel Wood Connectors

APPROVAL DOCUMENT: Drawing No. **NU-2**, titled "NVTA and NVTAS, NVBH 24 and NVUH 26, NVRT and NVTH", sheets 1 through 4 of 4, dated 06/25/2020, prepared by Nu-Vue Industries, Inc., signed and sealed by Vipin N. Tolat, P.E., bearing the Miami-Dade County Product Control revision stamp with the Notice of Acceptance (NOA) number and expiration date by the Miami-Dade County Product Control Section.

MISSILE IMPACT RATING: None

LABELING: A permanent mark with the manufacturer's name, acronym or logo is to be located on each unit. A permanent label with the manufacturer's name or logo, city, state, model/series, and the statement reading 'Miami-Dade County Product Control Approved' is to be located on each packaging carton.

RENEWAL of this NOA shall be considered after a renewal application has been filed and there has been no change in the applicable building code negatively affecting the performance of this product.

TERMINATION of this NOA will occur after the expiration date or if there has been a revision or change in the materials, use, and/or manufacture of the product or process. Misuse of this NOA as an endorsement of any product, for sales, advertising or any other purposes shall automatically terminate this NOA. Failure to comply with any section of this NOA shall be cause for termination and removal of NOA.

ADVERTISEMENT: The NOA number preceded by the words Miami-Dade County, Florida, and followed by the expiration date may be displayed in advertising literature. If any portion of the NOA is displayed, then it shall be done in its entirety.

INSPECTION: A copy of this entire NOA shall be provided to the user by the manufacturer or its distributors and shall be available for inspection at the job site at the request of the Building Official.

This NOA **renews** and **revises NOA # 17-0802.09** and consists of this page 1 and evidence pages E1, E-2 and E3, as well as approval document mentioned above.

The submitted documentation was reviewed by **Carlos M. Utrera, P.E.**

MIAMI-DADE COUNTY APPROVED

NOA No: 20-0519.03
Expiration Date: July 30, 2025
Approval Date: July 30, 2020
Page 1

NOTICE OF ACCEPTANCE: EVIDENCE SUBMITTED

1. EVIDENCE SUBMITTED UNDER PREVIOUS NOAs

A. DRAWINGS

1. Drawing No. **NU-2**, titled "NVTA and NVTAS, NVBH 24 and NVUH 26, NVRT and NVTH", sheets 1 through 4 of 4, dated 04/15/2015, prepared by Nu-Vue Industries, Inc., signed and sealed by Vipin N. Tolat, P.E.

B. TEST *"Submitted under NOA No. 05-0701.04"*

Test reports on wood connectors per ASTM D1761 by Product Testing, Inc., signed and sealed by C. R. Caudel, P.E. and S. E. Black, P.E.

	Report No.	Wood Connector	Direction	Date
1.	PT 02-4073	NVTA	Upward	11/06/02
2.	PT 02-4075	NVTA	Upward	11/07/02
3.	PT 02-4074	NVTA	Upward	11/06/02
4.	PT 02-3938	NVTA	Upward	08/06/02
5.	PT 03-4177	NVRT36	Upward	02/03/03
6.	PT 03-4202	NVRT36-T	Upward	02/19/03
7.	PT 03-4271	NVRT36-T	Upward	03/27/03
8.	PT 03-4270	NVRT24-T	Upward	03/27/03
9.	PT 02-4095	NVUH26	Up & Downward	01/17/03
10.	PT 02-4096	NVBH24	Up &Downward	12/03/02
11.	31-22456.0002	NVTA & NVTAS	Lateral	07/06/02
12.	PT 04-4698	NVTH24	Upward Parallel/Perpendicular	04/15/04
13.	PT 04-5036	NVTH24	Upward Load	12/10/04

C. CALCULATIONS *"Submitted under NOA No. 04-1202.01"*

Report of Design Capacities prepared by Vipin N. Tolat, P.E.

	Product Model	No. of Pages	Date	Signature
1.	NVBM24	7 through 8	05/05/03	V. N. Tolat, P.E
2.	NVRT	9 through 14	05/05/03	V. N. Tolat, P.E.
3.	NVTA & NVTAS	1 through 6	05/05/03	V. N. Tolat, P.E.
4.	NVTA & NVTAS	1 through 14	02/06/03	V. N. Tolat, P.E.
5.	NVRT	15 through 15	07/07/03	V. N. Tolat, P.E.

D. QUALITY ASSURANCE

1. Miami-Dade Department of Regulatory and Economic Resources (RER)

E. MATERIAL CERTIFICATIONS

1. None.

Carlos M. Utrera, P.E.
Product Control Examiner
NOA No: 20-0519.03
Expiration Date: July 30, 2025
Approval Date: July 30, 2020

NOTICE OF ACCEPTANCE: EVIDENCE SUBMITTED

F. STATEMENTS

1. Statement letter of code conformance to 2010 and 5th (2014) edition of the FBC, issued by Vipin N. Tolat, P.E., dated 04/29/2015, signed and sealed by Vipin N. Tolat, P.E.

   "Submitted under NOA No. 04-1202.01"

2. No Financial Interest and code compliance letter issued by Vipin N. Tolat, P.E., on 03/26/2003 signed and sealed by Vipin N. Tolat, P.E.

2. EVIDENCE SUBMITTED UNDER NOA # 17-0802.09

A. DRAWINGS

1. Drawing No. **NU-2**, titled "NVTA and NVTAS, NVBH 24 and NVUH 26, NVRT and NVTH", sheets 1 through 4 of 4, dated 07/17/2017, prepared by Nu-Vue Industries, Inc., signed and sealed by Vipin N. Tolat, P.E.

B. TEST

1. None.

C. CALCULATIONS

1. None.

D. QUALITY ASSURANCE

1. Miami-Dade Department of Regulatory and Economic Resources (RER)

E. MATERIAL CERTIFICATIONS

1. None.

F. STATEMENTS

1. Statement letter of code conformance to the 5th Edition (2014) and 6th Edition (2017) FBC and of no financial interest, issued by Vipin N. Tolat, P.E., dated 07/25/2017, signed and sealed by Vipin N. Tolat, P.E.

Carlos M. Utrera, P.E.
Product Control Examiner
NOA No: 20-0519.03
Expiration Date: July 30, 2025
Approval Date: July 30, 2020

NOTICE OF ACCEPTANCE: EVIDENCE SUBMITTED

3. NEW EVIDENCE SUBMITTED

A. DRAWINGS

1. Drawing No. **NU-2**, titled "NVTA and NVTAS, NVBH 24 and NVUH 26, NVRT and NVTH", sheets 1 through 4 of 4, dated 06/25/2020, prepared by Nu-Vue Industries, Inc., signed and sealed by Vipin N. Tolat, P.E.

B. TEST

1. None.

C. CALCULATIONS

1. Verification calculations for compliance with the ASTM D7147-05 and ASTM D7147-11 prepared by Vipin N. Tolat, P.E. dated 04/28/2020, signed and sealed by Vipin N. Tolat, P.E.

D. QUALITY ASSURANCE

1. Miami-Dade Department of Regulatory and Economic Resources (RER)

E. MATERIAL CERTIFICATIONS

1. None.

F. STATEMENTS

1. Statement letter of code conformance to the 6th Edition (2017) and the 7th Edition (2020) FBC and of no financial interest, issued by Vipin N. Tolat, P.E., dated 06/25/2020, signed and sealed by Vipin N. Tolat, P.E.

Carlos M. Utrera, P.E.
Product Control Examiner
NOA No: 20-0519.03
Expiration Date: July 30, 2025
Approval Date: July 30, 2020

OFFICE COPY
CITY OF MIAMI SPRINGS

MIAMI-DADE COUNTY

MIAMI-DADE COUNTY
PRODUCT CONTROL SECTION
11805 SW 26 Street, Room 208
Miami, Florida 33175-2474
T (786) 315-2590 F (786) 315-2599
www.miamidade.gov/economy

CITY OF MIAMI SPRINGS
BUILDING DEPARTMENT
DEC 10 2021
RECEIVED

DEPARTMENT OF REGULATORY AND ECONOMIC RESOURCES (RER)
BOARD AND CODE ADMINISTRATION DIVISION

NOTICE OF ACCEPTANCE (NOA)

Nu-Vue Industries, Inc.
1055 East 29th Street
Hialeah, FL 33013

SCOPE: This NOA is being issued under the applicable rules and regulations governing the use of construction materials. The documentation submitted has been reviewed and accepted by Miami-Dade County RER-Product Control Section to be used in Miami Dade County and other areas where allowed by the Authority Having Jurisdiction (AHJ).

This NOA shall not be valid after the expiration date stated below. The Miami-Dade County Product Control Section (In Miami Dade County) and/or the AHJ (in areas other than Miami Dade County) reserve the right to have this product or material tested for quality assurance purposes. If this product or material fails to perform in the accepted manner, the manufacturer will incur the expense of such testing and the AHJ may immediately revoke, modify, or suspend the use of such product or material within their jurisdiction. RER reserves the right to revoke this acceptance if it is determined by Miami-Dade County Product Control Section that this product or material fails to meet the requirements of the applicable building code.

This product is approved as described herein and has been designed to comply with the Florida Building Code, including the High Velocity Hurricane Zone.

DESCRIPTION: Series AB, NVSTA, NVHTA, NVTHJ, IKE, NVTT and NVHC-37 Steel Wood Connectors

APPROVAL DOCUMENT: Drawing No. **NU-1**, titled "Truss and Top Plate Anchors", sheets 1 through 4 of 4, dated 08/18/2020, prepared by Nu-Vue Industries, Inc., signed and sealed by Vipin N. Tolat, P.E., bearing the Miami-Dade County Product Control revision stamp with the Notice of Acceptance number and expiration date by the Miami-Dade County Product Control Section.

MISSILE IMPACT RATING: None

LABELING: Each unit shall bear a permanent label with the manufacturer's name or logo, city, state, model/series, and following statement: "Miami-Dade County Product Control Approved", unless otherwise noted herein.

RENEWAL of this NOA shall be considered after a renewal application has been filed and there has been no change in the applicable building code negatively affecting the performance of this product.

TERMINATION of this NOA will occur after the expiration date or if there has been a revision or change in the materials, use, and/or manufacture of the product or process. Misuse of this NOA as an endorsement of any product, for sales, advertising or any other purposes shall automatically terminate this NOA. Failure to comply with any section of this NOA shall be cause for termination and removal of NOA.

ADVERTISEMENT: The NOA number preceded by the words Miami-Dade County, Florida, and followed by the expiration date may be displayed in advertising literature. If any portion of the NOA is displayed, then it shall be done in its entirety.

INSPECTION: A copy of this entire NOA shall be provided to the user by the manufacturer or its distributors and shall be available for inspection at the job site at the request of the Building Official.

This NOA **revises NOA # 18-0312.06** and consists of this page 1 and evidence pages E-1, E-2, E-3 and E-4, as well as approval document mentioned above.

The submitted documentation was reviewed by **Carlos M. Utrera, P.E.**

MIAMI-DADE COUNTY APPROVED

NOA No. 20-0901.05
Expiration Date: May 22, 2023
Approval Date: November 5, 2020
Page 1

NOTICE OF ACCEPTANCE: EVIDENCE SUBMITTED

4. New Evidence Submitted

A. DRAWINGS

1. Drawing No. **NU-1**, titled "Truss and Top Plate Anchors", sheets 1 through 4 of 4, dated 08/18/2020, prepared by Nu-Vue Industries, Inc., signed and sealed by Vipin N. Tolat, P.E.

B. TESTS

1. None.

C. CALCULATIONS

1. None.

D. QUALITY ASSURANCE

1. Miami-Dade Department of Regulatory and Economic Resources (RER)

E. MATERIAL CERTIFICATIONS

1. None.

F. STATEMENTS

1. Statement letter of code conformance to the 6th Edition (2017) and 7th Edition (2020) FBC and of no financial interest, dated 08/18/2020, signed and sealed by Vipin N. Tolat, P.E.

Carlos M. Utrera, P.E.
Product Control Examiner
NOA No. 20-0901.05
Expiration Date: May 22, 2023
Approval Date: November 5, 2020

OFFICE COPY
CITY OF MIAMI SPRINGS

MIAMI-DADE COUNTY
PRODUCT CONTROL SECTION
11805 SW 26 Street, Room 208
Miami, Florida 33175-2474
T (786) 315-2590 F (786) 315-2599
www.miamidade.gov/economy

DEPARTMENT OF REGULATORY AND ECONOMIC RESOURCES (RER)
BOARD AND CODE ADMINISTRATION DIVISION

NOTICE OF ACCEPTANCE (NOA)

CITY OF MIAMI SPRINGS
BUILDING DEPARTMENT
DEC 10 2021
RECEIVED

Rheem Sales Company, Inc.
5600 Old Greenwood Rd.
Fort Smith, AR 72917

SCOPE:

This NOA is being issued under the applicable rules and regulations governing the use of construction materials. The documentation submitted has been reviewed and accepted by Miami-Dade County RER-Product Control Section to be used in Miami-Dade County and other areas where allowed by the Authority Having Jurisdiction (AHJ).

This NOA shall not be valid after the expiration date stated below. The Miami-Dade County Product Control Section (In Miami-Dade County) and/ or the AHJ (in areas other than Miami-Dade County) reserve the right to have this product or material tested for quality assurance purposes. If this product or material fails to perform in the accepted manner, the manufacturer will incur the expense of such testing and the AHJ may immediately revoke, modify, or suspend the use of such product or material within their jurisdiction. RER reserves the right to revoke this acceptance if it is determined by Miami-Dade County Product Control Section that this product or material fails to meet the requirements of the applicable building code.

This product is approved as described herein and has been designed to comply with the Florida Building Code, including the High Velocity Hurricane Zone.

DESCRIPTION: Mechanical Unit Steel and Aluminum Tie-Down Clips for Grade and Rooftop Applications

APPROVAL DOCUMENT: Drawing No. **20-28800**, titled "Wind Load Certification of Mechanical Unit Cabinetry and Steel/ Aluminum Tie-Down Clips: At Grade and Roof Mounted Applications", sheets 1 through 7 of 7, dated 05/14/2015, revised on 10/19/2020, prepared by Engineering Express, signed and sealed by Frank L. Bennardo, P.E., bearing the Miami-Dade County Product Control revision stamp with the Notice of Acceptance number and expiration date by the Miami-Dade County Product Control Section.

MISSILE IMPACT RATING: None

LABELING: Each unit shall bear a permanent label with the manufacturer's name or logo, city, state, model/ series, and following statement: "Miami-Dade County Product Control Approved", unless otherwise noted herein.

RENEWAL of this NOA shall be considered after a renewal application has been filed and there has been no change in the applicable building code negatively affecting the performance of this product.

TERMINATION of this NOA will occur after the expiration date or if there has been a revision or change in the materials, use, and/ or manufacture of the product or process. Misuse of this NOA as an endorsement of any product, for sales, advertising or any other purposes shall automatically terminate this NOA. Failure to comply with any section of this NOA shall be cause for termination and removal of NOA.

ADVERTISEMENT: The NOA number preceded by the words Miami-Dade County, Florida, and followed by the expiration date may be displayed in advertising literature. If any portion of the NOA is displayed, then it shall be done in its entirety.

INSPECTION: A copy of this entire NOA shall be provided to the user by the manufacturer or its distributors and shall be available for inspection at the job site at the request of the Building Official.

This NOA **renews and revises NOA # 18-0719.07** and consists of this page 1 and evidence pages E-1, E-2, E-3 and E-4, as well as approval document mentioned above.

The submitted documentation was reviewed by **Carlos M. Utrera, P.E.**

MIAMI-DADE COUNTY APPROVED

NOA No. 20-1102.09
Expiration Date: February 25, 2026
Approval Date: March 4, 2021
Page 1

NOTICE OF ACCEPTANCE: EVIDENCE SUBMITTED

1. Evidence submitted under previous NOAs

A. DRAWINGS *"Submitted under NOA # 15-0903.08"*

1. Drawing No. **15-2543GA** and **15-2564RE**, titled "Wind Load Certification of Mechanical Unit Cabinetry and Steel/Aluminum Tie-Down Clips: At Grade and Roof Mounted Applications", sheets 1 through 7 of 7, dated 05/14/2015, revised on 11/20/2015, prepared by Engineering Express, signed and sealed by Frank L. Bennardo, P.E.

B. TESTS *"Submitted under NOA # 15-0903.08"*

1. Test report on Uniform Static Air Pressure Test per FBC, TAS 202-94 along with marked-up drawings and installation diagram of Rheem RA Series Mechanical Units, prepared by American Test Lab of South Florida, Test Report No. **0323.01-15**, dated 05/18/2015, signed and sealed by Stephen W. Warter, P.E.

C. CALCULATIONS *"Submitted under NOA # 15-0903.08"*

1. Anchorage calculations prepared by Engineering Express, dated 11/20/2015, signed and sealed by Frank L. Bennardo, P.E.

D. QUALITY ASSURANCE

1. Miami-Dade Department of Regulatory and Economic Resources (RER)

E. MATERIAL CERTIFICATIONS

1. None.

F. STATEMENT *"Submitted under NOA # 15-0903.08"*

1. Statement letter of code conformance to the 5th edition (2014) FBC issued by Engineering Express, dated 08/24/2015, signed and sealed by Frank L. Bennardo, P.E.
2. Statement letter of no financial interest issued by Engineering Express, dated 11/20/2015, signed and sealed by Frank L. Bennardo, P.E.
3. Distributor agreement dated 11/12/2015.

Carlos M. Utrera, P.E.
Product Control Examiner
NOA No. 20-1102.09
Expiration Date: February 25, 2026
Approval Date: March 4, 2021

NOTICE OF ACCEPTANCE: EVIDENCE SUBMITTED

2. Evidence submitted under NOA # 18-0321.11

A. DRAWINGS

1. Drawing No. **15-2543GA** and **15-2564RE**, titled "Wind Load Certification of Mechanical Unit Cabinetry and Steel/Aluminum Tie-Down Clips: At Grade and Roof Mounted Applications", sheets 1 through 7 of 7, dated 05/14/2015, revised on 01/12/2018, prepared by Engineering Express, signed and sealed by Frank L. Bennardo, P.E.

B. TESTS

1. None.

C. CALCULATIONS

1. None.

D. QUALITY ASSURANCE

1. Miami-Dade Department of Regulatory and Economic Resources (RER)

E. MATERIAL CERTIFICATIONS

1. None.

F. STATEMENTS

1. Statement letter of code conformance to the 6th Edition (2017) FBC issued by Engineering Express, dated 03/19/2018, signed and sealed by Frank L. Bennardo, P.E.

Carlos M. Utrera, P.E.
Product Control Examiner
NOA No. 20-1102.09
Expiration Date: February 25, 2026
Approval Date: March 4, 2021

NOTICE OF ACCEPTANCE: EVIDENCE SUBMITTED

3. Evidence submitted under NOA # 18-0719.07

A. DRAWINGS

1. Drawing No. Drawing No. **15-2543GA** through **15-2543GD** and **15-2564RE**, titled "Wind Load Certification of Mechanical Unit Cabinetry and Steel/ Aluminum Tie-Down Clips: At Grade and Roof Mounted Applications", sheets 1 through 7 of 7, dated 05/14/2015, revised on 01/12/2018, prepared by Engineering Express, signed and sealed by Frank L. Bennardo, P.E. on 07/17/2018.

B. TESTS

1. None.

C. CALCULATIONS

1. None.

D. QUALITY ASSURANCE

1. Miami-Dade Department of Regulatory and Economic Resources (RER)

E. MATERIAL CERTIFICATIONS

1. None.

F. STATEMENTS

2. Models removal request, dated 07/17/2018, signed and sealed by Frank L. Bennardo, P.E.

Carlos M. Utrera, P.E.
Product Control Examiner
NOA No. 20-1102.09
Expiration Date: February 25, 2026
Approval Date: March 4, 2021

NOTICE OF ACCEPTANCE: EVIDENCE SUBMITTED

4. New evidence submitted

A. DRAWINGS

1. Drawing No. **20-28800**, titled "Wind Load Certification of Mechanical Unit Cabinetry and Steel/ Aluminum Tie-Down Clips: At Grade and Roof Mounted Applications", sheets 1 through 7 of 7, dated 05/14/2015, revised on 10/19/2020, prepared by Engineering Express, signed and sealed by Frank L. Bennardo, P.E.

B. TESTS

1. None.

C. CALCULATIONS

1. None.

D. QUALITY ASSURANCE

1. Miami-Dade Department of Regulatory and Economic Resources (RER)

E. MATERIAL CERTIFICATIONS

1. None.

F. STATEMENTS

1. Statement letter of code conformance to the 7th edition (2020) FBC issued by Engineering Express, dated 10/19/2020, signed and sealed by Frank L. Bennardo, P.E.
2. Statement letter of no financial interest issued by Engineering Express, dated 10/19/2020, signed and sealed by Frank L. Bennardo, P.E.



Carlos M. Utrera, P.E.
Product Control Examiner
NOA No. 20-1102.09
Expiration Date: February 25, 2026
Approval Date: March 4, 2021

CITY OF MIAMI SPRINGS

BUILDING DEPARTMENT
201 Westward Drive, Second Floor
Miami Springs, FL 33166
Office: 305-805-5030 Fax: 305-805-5036
www.miamisprings-fl.gov

NOTICE TO CITY OF MIAMI SPRINGS BUILDING DEPARTMENT OF EMPLOYMENT AS SPECIAL INSPECTOR UNDER THE FLORIDA BUILDING CODE.

I (We) have been retained by JAMBAR PREVAL to perform special inspector services under the **Florida Building Code** ~~2017~~ 2020-7th Edition at the ADDITION & REMODELING to RES project on the below listed structure as of Dec 20 - 2021 (date). I am a registered Architect/Professional Engineer licensed in the State of Florida.

Permit Number: PENDING

OFFICE COPY
CITY OF MIAMI SPRINGS

CITY OF MIAMI SPRINGS
BUILDING DEPARTMENT
DEC 10 2021
RECEIVED

- ☐ Special Inspector for Piling, **FBC 1822.1.20 (R4404.6.1.20)**
- ☒ Special Inspector for Trusses > 35 ft. long or 6 ft. high, **FBC 2319.17.2.4.2 (R4409.6.17.2.4.2)**
- ☒ Special Inspector for Reinforced Masonry, **FBC 2122.4 (R4407.5.4)**
- ☐ Special Inspector for Steel Framing, **FBC 2218.2 (R4408.5.2)**
- ☒ Special Inspector for Soil Compaction, **FBC 1820.3.1 (R4404.4.3.1)**
- ☐ Special Inspector for Precast Attachments, **FBC 1927.12.2 (R4405.9.12)**
- ☐ Special Inspector for Roofing Applications, Lt. Weight. Insul.Conc. **FBC 1917.2 (R4405.12.2)**
- ☐ Other _____

Note: Only the marked boxes apply.
The following individual(s) employed by this firm or myself are authorized representative to perform inspection*

1. Guillermo R. Gonzalez 2. _____
3. _____ 4. _____

***Special inspectors utilizing authorized representatives shall insure the authorized representative is qualified by education or licensure to perform the duties assign by Special Inspector. The qualifications shall include licensure as a professional engineer or architect: graduation from an engineering education program in civil or structural engineering; graduation from an architectural education program; successful completion of the NCEES Fundamentals Examination; or registration as building inspector or general contractor.**

I (we) will notify the City of Miami Springs Building Department of any changes regarding authorized personnel performing inspection services.

I (we) understand that a Special Inspector inspection log for each building must be displayed in a convenient location on the site for reference by the City of Miami Springs Building Department Inspector. All mandatory inspections, as required by the Florida Building Code, must be performed by the City of Miami Springs Building Department. Inspections performed by the Special Inspector hired by the owner are in addition to the mandatory inspections performed by the department. Further, upon completion of work under each Building Permit, I will submit to the Building Inspector at the time of the final inspection the completed inspection log form and a sealed statement indicating that, to the best of my knowledge, belief and professional judgment those portions of the project outlined above meet the intent of the Florida Building Code and are in substantial accordance with the approval plans.

Engineer/Architect
Signed and Sealed

Engineer/Architect
Guillermo R. Gonzalez RA 13960
Print Name

Date: 12/8/21 Address: 13400 SW 134 AVE Miami FL 33186

Guillermo Ramon Gonzalez RA.

9000 SW.168th Avenue.
Miami, Florida 33186
Telephone: (305) 484-8171

Miami Springs Building Department
201 Westward Drive
Miami Springs, Florida 33166

March 22, 2022

Owner: Ambar Preval
Project Address: 200 N. Esplanade Drive Miami Springs, Florida 33166
Application Number: 21-1143

Response Sheet To Building Dept. Comments

1. **Structural:** Dear Sir, Please see Attached structural calculations.
2. **Building:** revised sheet D-1 to show all areas affected by raising the floor slab. Also revised scope of work note. There is no overhead electrical line. It is underground service to nearby pole or transf. (sw.) by adjacent alley area, see site plan for electric meter location.
   See flood criteria notes on SP-1/D-1 & A-2. See window schedule on sheet A-4 for SHGC. Window & door NOAS under separate permit, they will be submitted at a later date not part of this permit. Shower enclosure type & specs (note) is on sheet A-1 on floor plan next to new bath for master bedroom. Shower detail is on sheet P-1. See precast lintel noas attached. See detail-E on A-4 for new windows/doors to existing tie beam connection. Also see detail-C on A-6 for new front concrete steps. See flood criteria Note on SP-1 & A-2.
3. **Electrical:** See revised sheet E-1 for additional outlets as per comments.

Respectfully,

RA.# 13960
License Number

4-7-22
Signature, Date
Guillermo Ramon Gonzalez

Description

Final Loads & Moments

Wall Weight moment @ Mid Ht	290.00 lbs	Wind Moment @ Mid Ht	9,241.50 in-#
		Seismic Moment @ Mid Ht	0.00 in-#
Dead Load Moment @ Top of Wall	0.00 in-#		
Dead Load Moment @ Mid Ht	0.00 in-#	Total Dead Load	0.00 lbs
		Total Live Load	0.00 lbs
Live Load Moment @ Top of Wall	0.00 in-#		
LiveLoad Moment @ Mid Ht	0.00 in-#		

Maximum Allow Moment for Applied Axial Load = 9,636.44 in-#
Maximum Allow Axial Load for Applied Moment = 19,430.63 lbs

MIAMI-DADE COUNTY
DEPARTMENT OF REGULATORY AND ECONOMIC RESOURCES (RER)
BOARD AND CODE ADMINISTRATION DIVISION

MIAMI-DADE COUNTY
PRODUCT CONTROL SECTION
11805 SW 26 Street, Room 208
Miami, Florida 33175-2474
T (786) 315-2590 F (786) 315-2599
www.miamidade.gov/economy

NOTICE OF ACCEPTANCE (NOA)

Cast-Crete USA, LLC
6324 County Road 579
Seffner, Florida 33584

SCOPE:
This NOA is being issued under the applicable rules and regulations governing the use of construction materials. The documentation submitted has been reviewed and accepted by Miami-Dade County RER- Product Control Section to be used in Miami Dade County and other areas where allowed by the Authority Having Jurisdiction (AHJ).

This NOA shall not be valid after the expiration date stated below. The Miami-Dade County Product Control Section (In Miami Dade County) and/or the AHJ (in areas other than Miami Dade County) reserve the right to have this product or material tested for quality assurance purposes. If this product or material fails to perform in the accepted manner, the manufacturer will incur the expense of such testing and the AHJ may immediately revoke, modify, or suspend the use of such product or material within their jurisdiction. RER reserves the right to revoke this acceptance, if it is determined by Miami-Dade County Product Control Section that this product or material fails to meet the requirements of the applicable building code.

This product is approved as described herein, and has been designed to comply with the High Velocity Hurricane Zone of the Florida Building Code.

DESCRIPTION: "Cast-Crete" 8 inch High Strength Precast and Pre-stressed Concrete Lintels

APPROVAL DOCUMENT: Drawing No. FD8, titled "Cast-Crete 8" Lintel Fabrication Details", sheets 1 through 3 of 3, prepared by Craig Parrino, P.E., dated June 7, 1996, last revision dated June 12, 2014, signed and sealed by Craig Parrino, P.E., on January 22, 2019, bearing the Miami-Dade County Product Control Revision stamp with the Notice of Acceptance number and the expiration date by the Miami-Dade County Product Control Section.

MISSILE IMPACT RATING: Large and Small Missile Impact Resistant

LABELING: Each lintel shall bear a permanent label with the manufacturer's name or logo and the Miami-Dade County logo.

RENEWAL of this NOA shall be considered after a renewal application has been filed and there has been no change in the applicable building code negatively affecting the performance of this product.

TERMINATION of this NOA will occur after the expiration date or if there has been a revision or change in the materials, use, and/or manufacture of the product or process. Misuse of this NOA as an endorsement of any product, for sales, advertising or any other purposes shall automatically terminate this NOA. Failure to comply with any section of this NOA shall be cause for termination and removal of NOA.

ADVERTISEMENT: The NOA number preceded by the words Miami-Dade County, Florida, and followed by the expiration date may be displayed in advertising literature. If any portion of the NOA is displayed, then it shall be done in its entirety.

INSPECTION: A copy of this entire NOA shall be provided to the user by the manufacturer or its distributors and shall be available for inspection at the job site at the request of the Building Official.

This NOA **revises NOA # 19-0130.13** and consists of this page 1, evidence submitted pages E-1, E-2, E-3, E-4, E-5, E-6 & E-7 as well as approval document mentioned above.
The submitted documentation was reviewed by **Helmy A. Makar, P.E., M.S.**

MIAMI-DADE COUNTY APPROVED

Helmy A. Makar
08/20/2020

NOA No. 20-0630.16
Expiration Date: 05/21/2022
Approval Date: 08/20/2020
Page 1

Cast-Crete USA, LLC

NOTICE OF ACCEPTANCE: EVIDENCE SUBMITTED

1. EVIDENCE SUBMITTED UNDER PREVIOUS APPROVAL #96-0613.01

A. DRAWINGS

1. *Drawing No. FD8, titled "Cast-Crete 8" Lintel Fabrication Details", prepared by Craig Parrino, P.E., dated 06/07/96, revision #1 dated 11/08/96, sheet 1 of 1, and Drawing No. LT8, titled "Cast-Crete 8" Lintel Safe Load Tables", prepared by Craig Parrino, P.E., dated 06/07/97, revision #4 dated 04/28/98, sheet 1 of 1, both drawings signed and sealed by Craig Parrino, P.E.*

B. TESTS

1. *Test report on flexural testing on Precast and Pre-stressed Concrete Lintels Filled Models, total of (36) concrete lintel specimens, per ASTM E-529-94, prepared by Applied Research Laboratories, Report No. 29702B, dated 07/30/97, signed and sealed by Christopher A. Hamon, P.E.*

C. CALCULATIONS

1. *Calculations for Cast-Crete 8-inch Lintels, dated 06/06/96, 349 pages, prepared by Craig Parrino, P.E., signed and sealed by Craig Parrino, P.E.*
2. *Calculations for Cast-Crete 8-inch Lintels, dated 11/11/96, 45 pages, prepared by Craig Parrino, P.E., signed and sealed by Craig Parrino, P.E.*

D. MATERIAL CERTIFICATIONS

1. *Mill Certified Inspection Report Silo #4 dated April 1996 for cement by Southdown Brooksville Cement Laboratory.*
2. *Mill Certified Inspection Report #20-8275 dated 06/20/95 for pre-stressing strand by The Crispin Company.*
3. *Mill Certified Inspection Report #20-8345 dated 11/13/95 for pre-stressing strand by The Crispin Company.*
4. *Mill Certified Inspection Report #2111-078240 dated 04/25/96 for #3 rebar by Ameristeel.*
5. *Mill Certified Inspection Report #84-M19614 dated 02/29/96 for #5 rebar by Birmingham Steel Corp.*
6. *Mill Certified Inspection Report #58-A66332 dated 01/28/96 for #4 rebar by Birmingham Steel Corp.*
7. *Mill Certified Inspection Report #84-M20749 dated 04/05/96 for #5 rebar by Birmingham Steel Corp.*
8. *Mill Certified Inspection Report #84-M19805 dated 03/06/96 for #4 rebar by Birmingham Steel Corp.*
9. *Mill Certified Inspection Report #84-M21208 dated 04/21/96 for #4 rebar by Birmingham Steel Corp.*
10. *Mill Certified Inspection Report #84-M20652 dated 04/03/96 for #5 rebar by Birmingham Steel Corp.*

Helmy A. Makar, P.E., M.S.
Product Control Section Supervisor
NOA No. 20-0630.16
Expiration Date: 05/21/2022
Approval Date: 08/20/2020

11. *Mill Certified Inspection Report #84-M20749 dated 04/05/96 for #5 rebar by Birmingham Steel Corp.*
12. *Quality Control Manual for Cast-Crete Machine Made Precast Lintels dated 05/14/96.*
13. *Quality Control Manual for Pre-stressed Products dated 03/20/95.*

2. EVIDENCE SUBMITTED UNDER PREVIOUS APPROVAL #01-0209.03

A. DRAWINGS

1. *None.*

B. TESTS

1. *None.*

C. CALCULATIONS

1. *None.*

D. MATERIAL CERTIFICATIONS

1. *None.*

3. EVIDENCE SUBMITTED UNDER PREVIOUS APPROVAL # 03-0605.05

A. DRAWINGS:

1. *Drawing No. FD8, titled "Cast-Crete 8" Lintel Fabrication Details", sheet 1 of 1, prepared by Craig Parrino, P.E., dated June 7, 1996, revision #2 dated January 28, 2003, and Drawing No. LT8, titled "Cast-Crete 8" Lintel Safe Load Tables", sheets 1 & 2 of 2, prepared by Craig Parrino, P.E., dated June 7, 1996, revision #5 dated March 24, 2003, all drawings are signed and sealed by Craig Parrino, P.E.*

B. TESTS:

1. *Test report on flexural testing on Precast Concrete Lintels Filled Models, total of (12) concrete lintel specimens, per ASTM E-529-94, prepared by Applied Research Laboratories, Report No. 30404B, dated 04/23/03, signed and sealed by Christopher A. Hamon, P.E.*

C. CALCULATIONS:

1. *Calculations for Cast-Crete High Strength Precast and Pre-stressed 8-inch Lintels, dated May 29, 2003, sheets 1.1 through 1.493 and 2.1 through 2.336, prepared by Craig Parrino, P.E., signed and sealed by Craig Parrino, P.E.*

D. MATERIAL CERTIFICATION:

1. *Quality System Manual for Cast-Crete Machine Made Precast Lintels revised on May 01, 2002.*
2. *Cast-Crete Quality System Manual for Pre-stressed Products dated 2002.*

Helmy A. Makar, P.E., M.S.
Product Control Section Supervisor
NOA No. 20-0630.16
Expiration Date: 05/21/2022
Approval Date: 08/20/2020

NOTICE OF ACCEPTANCE: EVIDENCE SUBMITTED

4. EVIDENCE SUBMITTED UNDER PREVIOUS APPROVAL #06-0222.01

A. DRAWINGS

1. *Drawing No. FD8, titled "Cast-Crete 8" Lintel Fabrication Details", sheets 1 through 3 of 3, prepared by Craig Parrino, P.E., dated June 7, 1996, last revision dated February 17, 2006, signed and sealed by Craig Parrino, P.E.*

B. TESTS

1. *None.*

C. CALCULATIONS

1. *None.*

D. QUALITY ASSURANCE

1. *By Miami-Dade Building Code Compliance Office.*

E. MATERIAL CERTIFICATION

1. *None.*

F. OTHER

1. *Letter from Cast-Crete Corporation, dated 02/20/2006, signed by Craig Parrino, P.E.*

5. EVIDENCE SUBMITTED UNDER PREVIOUS APPROVAL # 11-0121.04

A. DRAWINGS

1. *None.*

B. TESTS

1. *None.*

C. CALCULATIONS

1. *None.*

D. QUALITY ASSURANCE

1. *By Miami-Dade Building and Neighborhood Compliance Department (BNC).*

E. MATERIAL CERTIFICATION

1. *None.*

F. OTHER

1. *Letter from Cast-Crete Corporation, dated January 18, 2011, signed by Craig Parrino, P.E., certifying compliance with the Florida Building Code, 2007 Edition.*

Helmy A. Makar, P.E., M.S.
Product Control Section Supervisor
NOA No. 20-0630.16
Expiration Date: 05/21/2022
Approval Date: 08/20/2020

NOTICE OF ACCEPTANCE: EVIDENCE SUBMITTED

6. EVIDENCE SUBMITTED UNDER PREVIOUS APPROVAL #12-0209.13

A. DRAWINGS

1. *Drawing No. FD8, titled "Cast-Crete 8" Lintel Fabrication Details", sheets 1 through 3 of 3, prepared by Craig Parrino, P.E., dated June 7, 1996, last revision dated February 17, 2006, signed and sealed by Craig Parrino, P.E., on March 22, 2012.*

B. TESTS

1. *None.*

C. CALCULATIONS

1. *None.*

D. QUALITY ASSURANCE

1. *By Miami-Dade County Department of Permitting, Environment, and Regulatory Affairs.*

E. MATERIAL CERTIFICATION

1. *None.*

F. OTHER

1. *Letter from Cast-Crete Corporation, dated 02/03/2012, signed and sealed by Craig Parrino, P.E., certifying compliance with the Florida Building Code, 2010 Edition.*

7. EVIDENCE SUBMITTED UNDER PREVIOUS APPROVAL #14-0903.02

A. DRAWINGS

1. *Drawing No. FD8, titled "Cast-Crete 8" Lintel Fabrication Details", sheets 1 through 3 of 3, prepared by Craig Parrino, P.E., dated June 7, 1996, last revision dated June 12, 2014, signed and sealed by Craig Parrino, P.E., on August 19, 2014.*

B. TESTS

1. *None.*

C. CALCULATIONS

1. *Calculations for High Strength Precast and Pre-stressed 8-inch Lintels, dated August 19, 2014, sheets 14.101 through 14.124, prepared, signed, sealed by Craig Parrino, P.E.*

D. QUALITY ASSURANCE

1. *By Miami-Dade County Department of Regulatory and Economic Resources (RER).*

E. MATERIAL CERTIFICATION

1. *None.*

F. OTHER

1. *Letter from Cast-Crete USA, Inc., dated August 19, 2014, signed and sealed by Craig Parrino, P.E., certifying compliance with the Florida Building Code, 2014 Edition.*

Helmy A. Makar, P.E., M.S.
Product Control Section Supervisor
NOA No. 20-0630.16
Expiration Date: 05/21/2022
Approval Date: 08/20/2020

NOTICE OF ACCEPTANCE: EVIDENCE SUBMITTED

8. EVIDENCE SUBMITTED UNDER PREVIOUS APPROVAL #16-0126.03

A. DRAWINGS

1. None.

B. TESTS

1. None.

C. CALCULATIONS

1. None.

D. QUALITY ASSURANCE

1. By Miami-Dade County Department of Regulatory and Economic Resources (RER).

E. MATERIAL CERTIFICATION

1. None.

F. OTHER

1. Letter from Cast-Crete USA, Inc., dated January 13, 2016, signed and sealed by Craig Parrino, P.E., certifying compliance with the Florida Building Code, 2014 Edition.

9. EVIDENCE SUBMITTED UNDER PREVIOUS APPROVAL #17-0227.15

A. DRAWINGS

1. None.

B. TESTS

1. Verification Test report on flexural testing on Precast Concrete Lintels Filled Models, total of (8) concrete lintel specimens, per ASTM E-529-94, prepared by FTL, Report No. 16-0425.08, dated 01/26/17, signed and sealed by Idalmis Ortega, P.E.

C. CALCULATIONS

1. None.

D. QUALITY ASSURANCE

1. By Miami-Dade County Department of Regulatory and Economic Resources (RER).

E. MATERIAL CERTIFICATION

1. None.

Helmy A. Makar, P.E., M.S.
Product Control Section Supervisor
NOA No. 20-0630.16
Expiration Date: 05/21/2022
Approval Date: 08/20/2020

NOTICE OF ACCEPTANCE: EVIDENCE SUBMITTED

10. EVIDENCE SUBMITTED UNDER PREVIOUS APPROVAL #17-0821.19

A. DRAWINGS

1. None.

B. TESTS

1. None.

C. CALCULATIONS

1. None.

D. QUALITY ASSURANCE

1. By Miami-Dade County Department of Regulatory and Economic Resources (RER).

E. MATERIAL CERTIFICATION

1. None.

F. OTHER

1. Letter from Cast-Crete USA, Inc., dated August 08, 2017, signed and sealed by Craig Parrino, P.E., certifying compliance with the Florida Building Code, 2017 Edition.

11. EVIDENCE SUBMITTED UNDER PREVIOUS APPROVAL #19-0130.13

A. DRAWINGS

1. Drawing No. FD8, titled "Cast-Crete 8" Lintel Fabrication Details", sheets 1 through 3 of 3, prepared by Craig Parrino, P.E., dated June 7, 1996, last revision dated June 12, 2014, signed and sealed by Craig Parrino, P.E., on January 22, 2019.

B. TESTS

1. None.

C. CALCULATIONS

1. None.

D. QUALITY ASSURANCE

1. By Miami-Dade County Department of Regulatory and Economic Resources (RER).

E. MATERIAL CERTIFICATION

1. None.

F. OTHER

1. Article of Conversion for a name change.

Helmy A. Makar, P.E., M.S.
Product Control Section Supervisor
NOA No. 20-0630.16
Expiration Date: 05/21/2022
Approval Date: 08/20/2020

NOTICE OF ACCEPTANCE: EVIDENCE SUBMITTED

12. NEW EVIDENCE SUBMITTED

A. DRAWINGS

1. None.

B. TESTS

1. None.

C. CALCULATIONS

1. None.

D. QUALITY ASSURANCE

1. By Miami-Dade County Department of Regulatory and Economic Resources (RER).

E. MATERIAL CERTIFICATION

1. None.

F. OTHER

1. Letter from Cast-Crete USA, Inc., dated August 08, 2017, signed and sealed by Craig Parrino, P.E., certifying compliance with the Florida Building Code, 2017 Edition.

2. Letter from Cast-Crete USA, Inc., dated June 11, 2020, signed and sealed by Craig Parrino, P.E., certifying compliance with the Florida Building Code, 2020 Edition.

Helmy A. Makar, P.E., M.S.
Product Control Section Supervisor
NOA No. 20-0630.16
Expiration Date: 05/21/2022
Approval Date: 08/20/2020

CAST-CRETE® HIGH STRENGTH PRECAST AND PRESTRESSED CONCRETE LINTELS

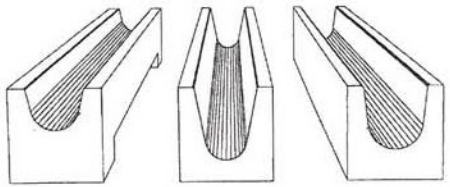

8" PRECAST W/ 2" RECESS DOOR U-LINTEL 8" PRECAST U-LINTEL 8" PRESTRESSED U-LINTEL

PRODUCT REVISED
as complying with the Florida
Building Code
Acceptance No 20-0630.16
Expiration Date 05/21/2022
By Holly A. Mahr
Miami Dade Product Control

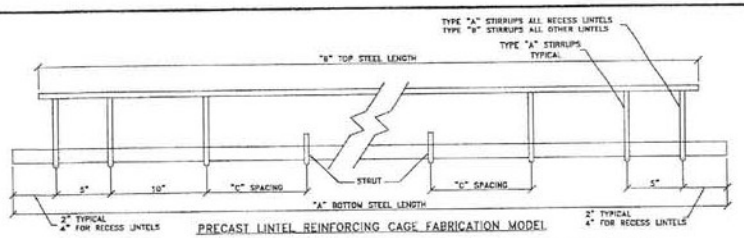

PRECAST LINTEL REINFORCING CAGE FABRICATION MODEL

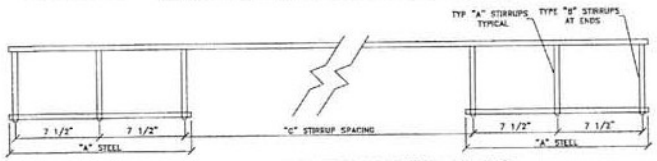

PRESTRESSED LINTEL REINFORCING CAGE FABRICATION MODEL

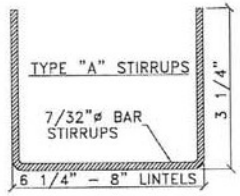

STIRRUP DETAILS
SCALE: N.T.S.

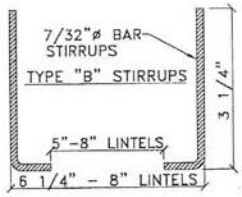

STIRRUP DETAILS
SCALE: N.T.S.

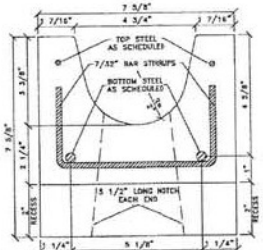

8" PRECAST W/ 2" RECESS DOOR U-LINTEL
SCALE: N.T.S.

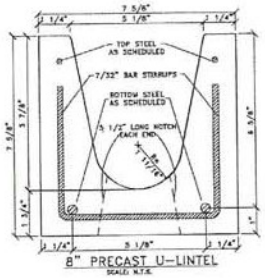

8" PRECAST U-LINTEL
SCALE: N.T.S.

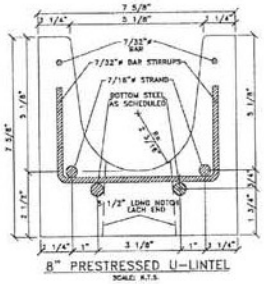

8" PRESTRESSED U-LINTEL
SCALE: N.T.S.

8" PRESTRESSED U-LINTEL DATA TABLE

LINTEL SIZE	VOLUME CY	WEIGHT LBS	"A" STEEL TYPE	"A" STEEL LENGTH	"B" TOP STEEL TYPE	"B" TOP STEEL LENGTH	"C" SPACING	NO. OF STIRRUPS
14'-8"	0.134	542	7/32 BAR	1'-3"	7/32 BAR	14'-6"	4 @ 3'-0"	9
15'-4"	0.140	567	7/32 BAR	1'-3"	7/32 BAR	15'-2"	4 @ 3'-2"	9
17'-4"	0.158	639	7/32 BAR	1'-3"	7/32 BAR	17'-2"	4 @ 3'-8"	9
19'-4"	0.176	713	7/32 BAR	1'-3"	7/32 BAR	19'-2"	4 @ 4'-2"	9
21'-4"	0.194	787	7/32 BAR #4 REBAR @ MIDSPAN	1'-3" 15'-0"	7/32 BAR	21'-2"	5 @ 3'-8 3/4"	10
22'-0"	0.200	811	7/32 BAR #4 REBAR @ MIDSPAN	1'-3" 16'-0"	7/32 BAR	21'-10"	5 @ 3'-10 3/8"	10
24'-0"	0.219	885	7/32 BAR #4 REBAR @ MIDSPAN	1'-3" 18'-0"	7/32 BAR	23'-10"	5 @ 4'-3 1/8"	10

8" PRECAST W/ 2" RECESS DOOR U-LINTEL DATA TABLE

LINTEL SIZE	OVERALL LENGTH	RECESS LENGTH	VOLUME CY	WEIGHT LBS	"A" BOTTOM STEEL TYPE	"A" BOTTOM STEEL LENGTH	"B" TOP STEEL TYPE	"B" TOP STEEL LENGTH	"C" SPACING	NO. OF STRUTS/ STIRRUPS
2'-8"	4'-4"	3'-0"	0.036	146	#3 REBAR	3'-10" PLUS HOOK	7/32 BAR	3'-8"	N/A	4
3'-0"	4'-6"	3'-4"	0.037	150	#3 REBAR	4'-0" PLUS HOOK	7/32 BAR	3'-10"	N/A	4
4'-0"	5'-8"	4'-4"	0.047	190	#3 REBAR	5'-2" PLUS HOOK	7/32 BAR	5'-0"	N/A	6
4'-4"	5'-10"	4'-8"	0.047	190	#3 REBAR	5'-2" PLUS HOOK	7/32 BAR	5'-2"	N/A	6
5'-0"	6'-8"	5'-4"	0.054	219	#4 REBAR	6'-2" PLUS HOOK	#3 REBAR	6'-0"	N/A	6
6'-0"	7'-6"	6'-4"	0.060	243	#4 REBAR	7'-2" PLUS HOOK	#3 REBAR	6'-10"	N/A	6
8'-0"	9'-8"	8'-4"	0.078	316	#4 REBAR	9'-2" PLUS HOOK	#3 REBAR	9'-0"	2'-0"	8

8" PRECAST U-LINTEL DATA TABLE

LINTEL SIZE	VOLUME CY	WEIGHT LBS	"A" BOTTOM STEEL TYPE	"A" BOTTOM STEEL LENGTH	"B" TOP STEEL TYPE	"B" TOP STEEL LENGTH	"C" SPACING	NO. OF STRUTS/ STIRRUPS
3'-6"	0.032	126	#3 REBAR	3'-5"	7/32 BAR	3'-2"	N/A	4
4'-0"	0.037	144	#3 REBAR	3'-11"	7/32 BAR	3'-8"	N/A	4
4'-6"	0.041	162	#3 REBAR	4'-5"	7/32 BAR	4'-2"	N/A	4
5'-4"	0.049	192	#3 REBAR	5'-3"	7/32 BAR	5'-0"	N/A	6
5'-10"	0.054	210	#3 REBAR	5'-9"	7/32 BAR	5'-6"	N/A	6
6'-6"	0.060	234	#4 REBAR	6'-5"	7/32 BAR	6'-2"	N/A	6
7'-6"	0.069	270	#4 REBAR	7'-5"	7/32 BAR	7'-2"	N/A	6
9'-4"	0.086	336	#4 REBAR	9'-3"	#3 REBAR	9'-0"	2'-0"	8
10'-6"	0.096	378	#4 REBAR	10'-5"	#3 REBAR	10'-2"	2'-0"	8
11'-4"	0.104	408	#5 REBAR	11'-3"	#3 REBAR	11'-0"	3'-0"	8
12'-0"	0.110	432	#5 REBAR	11'-11"	#3 REBAR	11'-8"	3'-0"	8
13'-4"	0.122	480	#5 REBAR	13'-3"	#3 REBAR	13'-0"	3'-0"	8
14'-0"	0.129	504	#5 REBAR	13'-11"	#3 REBAR	13'-8"	3'-0"	8

GENERAL NOTES:

1. REINFORCING STEEL: 7/32 BAR ASTM A510; #3, #4, AND #5 REBAR GRADE 60 ASTM A615; 7/16 INCH DIAMETER 270KSI LOW-RELAXATION PRESTRESSING STRAND ASTM A416.
2. CONCRETE STRENGTHS: f'c = 6000 PSI FOR 8" PRESTRESSED LINTELS; f'c = 4000 PSI FOR ALL PRECAST 8 INCH LINTELS.
3. INITIAL PRESTRESS FORCE = 0.70 x fpu.
4. STRIPPING STRENGTH: PRESTRESSED LINTELS = 3500 PSI.
5. NOTE: THE TOTAL NUMBER OF STIRRUPS REQUIRED IS COUNTED STARTING FROM EACH END OF THE REINFORCING CAGE; FOR EXAMPLE – NO. OF STIRRUPS = 4, THEN THE REINFORCING CAGE MODEL SHOWS 2 STIRRUPS FROM EACH END.
6. 2.5 POUNDS OF POLYPROPYLENE FIBERS PER CU.YD. OF CONCRETE MAY BE USED IN LIEU OF PRESTRESSED LINTEL REINFORCING CAGE TO RESIST LIFTING AND HANDLING FORCES.

PRODUCT REVISED
as complying with the Florida
Building Code
Acceptance No 19-0130.13
Expiration Date 05/21/2022
By Holly A. Mahr
Miami Dade Product Control

CRAIG PARRINO, No. 44756, STATE OF FLORIDA, PROFESSIONAL ENGINEER, 1-22-19

CRAIG PARRINO
6324 CR 579
SEFFNER, FL 33584
FL. P.E. LIC. NO. 44756

THIS PROPRIETARY INFORMATION IS PROVIDED FOR PRODUCT APPROVAL. IT IS PROTECTED BY COPYRIGHT LAWS AND CANNOT BE REPRODUCED OR DISTRIBUTED WITHOUT THE PRIOR WRITTEN CONSENT OF CAST-CRETE USA, LLC.

NO.	BY	REVISION	DATE
4	CP	GENERAL REVISION NUMBER ONE	11/08/96
3	TO	GENERAL REVISION NUMBER TWO	1/28/03
2	CP	NAME CHANGE & SYNTHETIC FIBER OPTION	2/17/06
1	CP	GENERAL REVISION	6/12/14
0			

MEMBER OF CMA NATIONAL CONCRETE MASONRY ASSOCIATION

CAST-CRETE® HIGH STRENGTH PRECAST AND PRESTRESSED CONCRETE LINTELS AND SILLS — CAST-CRETE USA, LLC. — 6324 County Road 579, Seffner, Florida 33584, Phone: 813-621-4441

TITLE: CAST-CRETE 8" LINTEL FABRICATION DETAILS

FILE NAME:	DRSUB1-14	DRAWN BY:	CRAIG PARRINO, P.E. – REG. NO. 44756	SCALE:	NOT TO SCALE
DATE:	06/07/96	CHECKED BY:	CRAIG PARRINO, P.E. – REG. NO. 44756	DRAWING No.	F08 SHEET 1 OF 3

SAFE GRAVITY LOADS FOR 8" PRECAST & PRESTRESSED U-LINTELS

CAST-CRETE	SAFE LOAD - POUNDS PER LINEAR FOOT							
TYPE / LENGTH	8U8	8F8-0B	8F12-0B	8F16-0B	8F20-0B	8F24-0B	8F28-0B	8F32-0B
		8F8-1B	8F12-1B	8F16-1B	8F20-1B	8F24-1B	8F28-1B	8F32-1B
3'-6" (42") PRECAST	2231	3069	3719	5163	6607	8054	9502	10951
		3069	4605	6113	7547	8974	10394	11809
4'-0" (48") PRECAST	1965	2561	2751	3820	4890	5961	7034	8107
		2693	4605	6113	7547	8974	10394	11809
4'-6" (54") PRECAST	1599	1969	2110	2931	3753	4576	5400	6224
		2189	4375	6113	7547 (7)	8672	10294	11809
5'-4" (64") PRECAST	1217	1349	1438	1999	2560	3123	3686	4249
		1663	3090	5365	7547 (26)	7342 (16)	8733 (16)	10127 (15)
5'-10" (70") PRECAST	1062	1105	1173	1631	2090	2549	3009	3470
		1451	2622	4360	7168 (43)	6026 (18)	7181 (19)	8328 (28)
6'-6" (78") PRECAST	908	1238	2177	3480	3031	3707	4383	5061
		1238	2177	3480	5381	8360	10394 (27)	8825 (14)
7'-6" (90") PRECAST	743	1011	1729	2632	2205	2698	3191	3685
		1011	1729	2661	3898	5681	8467 (44)	6472 (15)
9'-4" (112") PRECAST	554	699	1160	1625	2564	3486	2818	3302
		752	1245	1843	2564	3486	4705 (37)	6390 (47)
10'-6" (126") PRECAST	475	535	890	1247	2093	2777	2163	2536
		643	1052	1533	2093	2781	3643 (39)	4754 (45)
11'-4" (136") PRECAST	362	582	945	1366	1846	2423	3127	4006
		582	945	1366	1846	2423	3127	4006
12'-0" (144") PRECAST	337	540	873	1254	1684	2193	2805	3552
		540	873	1254	1684	2193	2805	3552
13'-4" (160") PRECAST	296	471	755	1075	1428	1838	2316	2883
		471	755	1075	1428	1838	2316	2883
14'-0" (168") PRECAST	279	424	706	1002	1326	1697	2127	2630
		442	706	1002	1326	1697	2127	2630
14'-8" (176") PRESTRESSED	N.R.	NR	NR	NR	NR	NR	NR	NR
		458	783	1370	1902	2245	2517	2712
15'-4" (184") PRESTRESSED	N.R.	NR	NR	NR	NR	NR	NR	NR
		412	710	1250	1733	2058	2320	2513
17'-4" (208") PRESTRESSED	N.R.	NR	NR	NR	NR	NR	NR	NR
		300	548	950	1326	1609	1849	2047
19'-4" (232") PRESTRESSED	N.R.	NR	NR	NR	NR	NR	NR	NR
		235	420	750	1037	1282	1515	1716
21'-4" (256") PRESTRESSED	N.R.	NR	NR	NR	NR	NR	NR	NR
		180	340	598	845	1114	1359	1468
22'-0" (264") PRESTRESSED	N.R.	NR	NR	NR	NR	NR	NR	NR
		165	315	550	784	1047	1285	1399
24'-0" (288") PRESTRESSED	N.R.	NR	NR	NR	NR	NR	NR	NR
		129	250	450	654	884	1092	1222

(#) THE NUMBERS IN PARENTHESIS ARE PERCENT REDUCTIONS FOR GRADE 40 FIELD ADDED REBAR. SEE GENERAL NOTE NO. 4 ON SHEET 3 OF 3.

SAFE LATERAL LOADS FOR 8" PRECAST & PRESTRESSED U-LINTELS

CAST-CRETE	SAFE LOAD PLF		
TYPE / LENGTH	8U8	8F8	RCMU *
3'-6" (42") PRECAST	1025	1024	1598
4'-0" (48") PRECAST	765	763	1309
4'-6" (54") PRECAST	592	591	1073
5'-4" (64") PRECAST	411	411	745
5'-10" (70") PRECAST	340	339	616
6'-6" (78") PRECAST	507	721	490
7'-6" (90") PRECAST	424	534	363
9'-4" (112") PRECAST	326	512	230
10'-6" (126") PRECAST	284	401	180
11'-4" (136") PRECAST	260	452	154
12'-0" (144") PRECAST	244	402	137
13'-4" (160") PRECAST	217	324	110
14'-0" (168") PRECAST	205	293	100
14'-8" (176") PRESTRESSED	N.R.	284	91
15'-4" (184") PRESTRESSED	N.R.	259	83
17'-4" (208") PRESTRESSED	N.R.	194	64
19'-4" (232") PRESTRESSED	N.R.	148	52
21'-4" (256") PRESTRESSED	N.R.	125	42
22'-0" (264") PRESTRESSED	N.R.	116	40
24'-0" (288") PRESTRESSED	N.R.	91	33

* SEE GENERAL NOTE NO. 18 ON SHEET 3 OF 3.

PRODUCT REVISED
as complying with the Florida
Building Code
Acceptance No. 20-0630.16
Expiration Date 05/21/2022
By Hedy A. Martin
Miami Dade Product Control

SAFE UPLIFT LOADS FOR 8" PRECAST & PRESTRESSED U-LINTELS

CAST-CRETE	SAFE LOAD - POUNDS PER LINEAR FOOT							
TYPE / LENGTH	8F8-1T	8F12-1T	8F16-1T	8F20-1T	8F24-1T	8F28-1T	8F32-1T
	8F8-2T	8F12-2T	8F16-2T	8F20-2T	8F24-2T	8F28-2T	8F32-2T
3'-6" (42") PRECAST	1569	2655	3524	4394	5263	6132	7001
	1569	2655	3524	4394	5263	6132	7001
4'-0" (48") PRECAST	1363	2305	3060	3815	4570	5325	6079
	1363	2305	3060	3815	4570	5325	6079
4'-6" (54") PRECAST	1207	2040	2707	3375	4043	4711	5378
	1207	2040	2707	3375	4043	4711	5378
5'-4" (64") PRECAST	1016	1715 (11)	2276 (4)	2838	3399	3961	4522
	1016	1715	2276	2838	3399	3961	4522
5'-10" (70") PRECAST	909	1567 (16)	2080 (13)	2593 (9)	3107 (6)	3620 (4)	4133 (3)
	929	1567	2080	2593	3107	3620	4133
6'-6" (78") PRECAST	835 (12)	1407 (24)	1868 (21)	2329 (18)	2790 (16)	3251 (14)	3712 (12)
	835	1407	1868	2329	2790	3251	3712
7'-6" (90") PRECAST	727 (22)	1065 (26)	1624 (21)	2025 (28)	2426 (26)	2827 (25)	3228 (24)
	727	1224	1624	2025	2426	2827	3228
9'-4" (112") PRECAST	591	708 (28)	1136 (24)	1474 (24)	1815 (24)	2157 (24)	2500 (24)
	591	862	1318	1643	1969	2294	2619
10'-6" (126") PRECAST	530	575 (24)	916 (23)	1188 (23)	1461 (23)	1736 (23)	2011 (23)
	530	695	1180 (9)	1472 (9)	1763 (7)	2055	2346
11'-4" (136") PRECAST	474	504 (22)	800 (23)	1037 (23)	1274 (23)	1513 (25)	1753 (27)
	494	607	1042 (10)	1372 (11)	1643 (9)	1915 (8)	2187 (8)
12'-0" (144") PRECAST	470 (9)	458 (23)	724 (31)	938 (32)	1153 (32)	1369 (32)	1585 (32)
	470	550	940 (10)	1302 (15)	1560 (13)	1818 (11)	2075 (10)
13'-4" (160") PRECAST	418 (15)	386 (22)	607 (25)	785 (26)	964 (26)	1143 (26)	1323 (26)
	428	460	780 (9)	1159 (21)	1418 (20)	1653 (19)	1887 (17)
14'-0" (168") PRECAST	384 (15)	358 (21)	560 (29)	724 (26)	889 (26)	1054 (26)	1220 (26)
	410	425	717 (9)	1063 (21)	1358 (23)	1582 (25)	1807 (25)
14'-8" (176") PRESTRESSED	239	334 (21)	520 (29)	672 (29)	825 (29)	978 (29)	1131 (29)
	246	395	663 (5)	980 (29)	1303 (29)	1518 (25)	1734 (24)
15'-4" (184") PRESTRESSED	224	313 (29)	486 (29)	627 (29)	769 (29)	911 (29)	1054 (29)
	230	368	616 (8)	908 (29)	1240 (28)	1460 (27)	1668 (26)
17'-4" (208") PRESTRESSED	187	263 (19)	405 (25)	521 (27)	638 (27)	756 (27)	873 (27)
	192	306	506 (8)	740 (19)	1005 (27)	1271 (31)	1473 (31)
19'-4" (232") PRESTRESSED	162	229 (17)	348 (25)	447 (25)	547 (25)	647 (25)	747 (25)
	166	263	429 (9)	623 (19)	841 (24)	1059 (26)	1227 (26)
21'-4" (256") PRESTRESSED	142	204 (16)	307 (25)	393 (23)	480 (23)	568 (24)	655 (24)
	142	232	373 (7)	537 (17)	721 (23)	905 (28)	1048 (28)
22'-0" (264") PRESTRESSED	137	197 (15)	295 (22)	379 (23)	462 (23)	546 (23)	630 (23)
	137	223	358 (9)	513 (17)	688 (24)	863 (28)	999 (28)
24'-0" (288") PRESTRESSED	124	179 (14)	267 (21)	342 (21)	416 (21)	492 (24)	567 (22)
	124	202	319 (7)	455 (16)	606 (23)	757 (28)	907 (28)

(#) THE NUMBERS IN PARENTHESIS ARE PERCENT REDUCTIONS FOR GRADE 40 FIELD ADDED REBAR. SEE GENERAL NOTE NO. 4 ON SHEET 3 OF 3.

PRODUCT REVISED
as complying with the Florida
Building Code
Acceptance No. 19-0130.13
Expiration Date 05/21/2022
By Hedy A. Martin
Miami Dade Product Control

CRAIG PARRINO
6324 CR 579
SEFFNER, FL 33584
FL. P.E. LIC. NO. 44756

CRAIG PARRINO LICENSE No. 44756 STATE OF FLORIDA PROFESSIONAL ENGINEER 1-22-19

SEE GENERAL NOTES – SHEET 3 OF 3

NO.	BY	REVISION	DATE
1	CP	GENERAL REVISION NUMBER ONE	11/08/96
2	CP	RECESS TYPE DESIGNATION	12/30/96
3	CP	8U8 11'-4" THRU 14'-0"	11/08/96
4	CP	GENERAL REVISION	4/28/98
5	CP	GENERAL REVISION	3/24/03
6	CP	NAME CHANGE	2/17/06
7	CP	GENERAL REVISION	6/12/14

MEMBER OF CMA NATIONAL CONCRETE MASONRY ASSOCIATION

CAST-CRETE HIGH STRENGTH PRECAST AND PRESTRESSED CONCRETE LINTELS AND SILLS — CAST-CRETE USA, LLC. 6324 County Road 579 Seffner, Florida 33584 Phone: 813-621-4641

TITLE: CAST-CRETE 8" LINTEL FABRICATION DETAILS

FILE NAME: D8SUBZ-14	DRAWN BY: CRAIG PARRINO, P.E. – REG. NO. 44756	SCALE: NOT TO SCALE
DATE: 06/07/95	CHECKED BY: CRAIG PARRINO, P.E. – REG. NO. 44756	DRAWING No. FD8 SHEET 2 OF 3

SAFE GRAVITY LOADS FOR 8" PRECAST w/ 2" RECESS DOOR U-LINTELS

CAST-CRETE	SAFE LOAD - POUNDS PER LINEAR FOOT							
TYPE / LENGTH	8RU6	8RF6-0B	8RF10-0B	8RF14-0B	8RF18-0B	8RF22-0B	8RF26-0B	8RF30-0B
		8RF6-1B	8RF10-1B	8RF14-1B	8RF18-1B	8RF22-1B	8RF26-1B	8RF30-1B
4'-4" (52") PRECAST	1635	1749	3355	3280	4349	5421	6493	7567
		1891	3699	5206	6639	8060	9479	10893
4'-6" (54") PRECAST	1494	1596	3063	2992	3968	4946	5924	6904
		1756	3699	5206	6639	8060	9479	10893
5'-8" (68") PRECAST	866	920	1770	1716	2277	2839	3402	3966
		1167	2481	4567	6389	8060 (34)	7917 (19)	9311 (19)
5'-10" (70") PRECAST	810	859	1653	1600	2124	2649	3174	3700
		1113	2342	4242	6639 (30)	8060 (31)	7402 (16)	8706 (19)
6'-8" (80") PRECAST	797	901	1825	3120	5048	7747	9448	7360
		901	1825	3120	5048	7915	9479	10893 (32)
7'-6" (90") PRECAST	669	755	1490	2459	3776	5743	7239	5623
		755	1490	2459	3776	5743	8998 (19)	10893 (45)
9'-8" (116") PRECAST	411	466	999	1568	2253	3129	4091	3146
		526	999	1568	2253	3129	4150	5891 (47)

(#) THE NUMBERS IN PARENTHESIS ARE PERCENT REDUCTIONS FOR GRADE 40 FIELD ADDED REBAR. SEE GENERAL NOTE NO. 4

SAFE LATERAL LOADS FOR 8" PRECAST w/ 2" RECESS DOOR U-LINTELS

CAST-CRETE	SAFE LOAD PLF		
TYPE / LENGTH	8RU6	8RF6	RCMU *
4'-4" (52") PRECAST	758	757	1164
4'-6" (54") PRECAST	694	693	1073
5'-8" (68") PRECAST	408	407	655
5'-10" (70") PRECAST	382	381	616
6'-8" (80") PRECAST	595	788	464
7'-6" (90") PRECAST	509	674	363
9'-8" (116") PRECAST	370	490	214

* SEE GENERAL NOTE 18

SAFE UPLIFT LOADS FOR 8" PRECAST w/ 2" RECESS DOOR U-LINTELS

CAST-CRETE	SAFE LOAD - POUNDS PER LINEAR FOOT						
TYPE / LENGTH	8RF6-1T	8RF10-1T	8RF14-1T	8RF18-1T	8RF22-1T	8RF26-1T	8RF30-1T
	8RF6-2T	8RF10-2T	8RF14-2T	8RF18-2T	8RF22-2T	8RF26-2T	8RF30-2T
4'-4" (52") PRECAST	905	1668	2362	3056	3751	4445	5140
	905	1668	2362	3056	3751	4445	5140
4'-6" (54") PRECAST	867	1604	2272	2939	3607	4275	4943
	867	1604	2272	2939	3607	4275	4943
5'-8" (68") PRECAST	675	1269 (16)	1797	2326 (6)	2854 (2)	3382	3911
	675	1269	1797	2326	2854	3382	3911
5'-10" (70") PRECAST	655	1207 (16)	1746 (11)	2259 (7)	2773 (3)	3286 (3)	2799 (1)
	655	1233	1746	2259	2773	3286	2799
6'-8" (80") PRECAST	570	929 (18)	1530 (22)	1980 (15)	2429 (16)	2879 (13)	3329 (14)
	570	1080	1530	1980	2429	2879	3329
7'-6" (90") PRECAST	506	742 (16)	1364 (30)	1765 (27)	2166 (25)	2567 (21)	2968 (23)
	506	898	1364	1765	2166	2567	2968
9'-8" (116") PRECAST	395	468 (15)	884 (32)	1222 (33)	1540 (34)	1859 (34)	2180 (34)
	395	560	1072	1388	1701	2016	2331

(#) THE NUMBERS IN PARENTHESIS ARE PERCENT REDUCTIONS FOR GRADE 40 FIELD ADDED REBAR. SEE GENERAL NOTE NO. 4

GENERAL NOTES

1) Materials:
   - f'c 8" precast lintel = 4000 psi
   - f'c prestressed lintel = 6000 psi
   - f'c grout = 3000 psi with maximum 3/8 inch aggregate
   - concrete masonry units (CMU) per ASTM C90 with minimum net area compressive strength = 1900 psi
   - rebar per ASTM A615 Grade 60
   - prestressing strand per ASTM A416 Grade 270 low relaxation
   - mortar per ASTM C270 Type M or S
2) All safe load tables based on minimum 4 inch nominal bearing.
   Exception: Safe loads for lintel type 8U8 and 8RU6 must be reduced by 20% if bearing length is less than 6 1/2 inches.
3) Provide full mortar bed and head joints.
4) The number in parenthesis indicates the percent reduction for grade 40 field added rebar.
   Example: 7'-6" Lintel 8F32-1B safe gravity load = 6472 (15) w/ 15% reduction → 6472 (.85) = 5501 plf
5) All lintels meet or exceed L/360 deflection.
   Exception: Prestress lintel type 8F8 17'-4" and longer meets or exceeds L/180 deflection.
   Use is limited to conditions meeting the Florida Building Code Sections 1604.3.1 as applicable
6) Shore filled lintels as required.
7) One #7 rebar may be substituted for two #5 rebars.
8) Installation/attachment of lintel must comply with the architectural and/or structural documents.
9) The designer may evaluate concentrated loads from the safe load tables by calculating the maximum resisting moment and shear at d-away from the face of support.
10) N.R. = Not Rated
11) Bottom field added rebar to be located at the bottom of the lintel cavity.
12) Lintels are manufactured with 5-1/2" long notches at the ends to accomodate vertical cell reinforcing and grouting.
13) The exterior surface of lintels installed in exterior concrete masonry walls shall have a coating of stucco applied in accordance with ASTM C-926 or other approved coating.
14) Lintels loaded simultaneously with vertical (gravity or uplift) and horizontal (lateral) loads should be checked for the combined loading with the following equation:

$$\frac{\text{Applied vertical load}}{\text{Safe vertical load}} + \frac{\text{Applied horizontal load}}{\text{Safe horizontal load}} \leq 1.0$$

15) For composite lintel heights not shown, use safe load from next lower height shown.
16) For lintel lengths not shown, use safe load from next longest length shown.
17) Safe loads are superimposed allowable loads.
18) Safe loads based on rational design analysis per ACI 530 and ACI 318
19) Additional lateral load capacity can be obtained by the designer by providing additional reinforced concrete masonry units (RCMU) above the lintel. See sketch below:

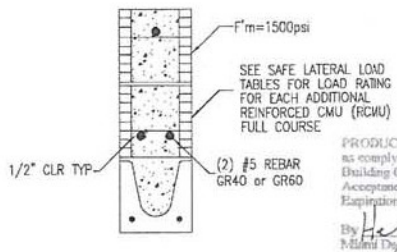

TYPE DESIGNATION

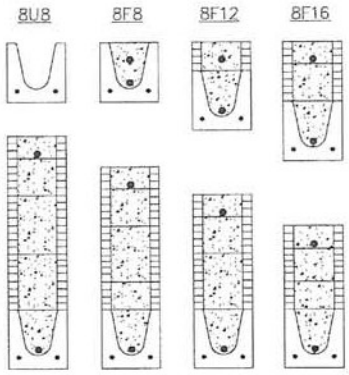

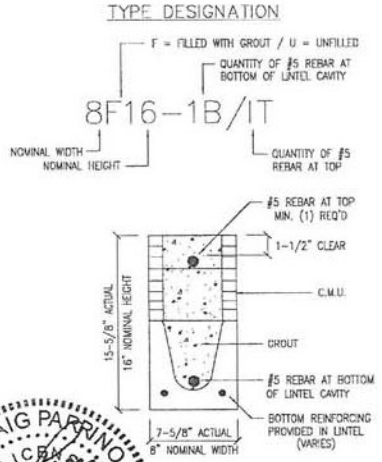

PRODUCT REVISED as complying with the Florida Building Code Acceptance No 20-0630.16 Expiration Date 05/21/2022 By Hedy A. Mahn Miami Dade Product Control

PRODUCT REVISED as complying with the Florida Building Code Acceptance No 19-0130.13 Expiration Date 05/21/2022 By Hedy A. Mahn Miami Dade Product Control

CRAIG PARRINO LIC. No. 44756 STATE OF FLORIDA 1-22-19 PROFESSIONAL ENGINEER

CRAIG PARRINO
6324 CR 579
SEFFNER, FL 33584
FL. P.E. LIC. NO. 44756

NO.	BY	REVISION	DATE
1	CP	GENERAL REVISION NUMBER ONE	11/08/96
2	CP	RECESS TYPE DESIGNATION	12/30/96
3	CP	8U8 11'-4" THRU 14'-0"	11/08/96
4	CP	GENERAL REVISION	4/28/98
5	CP	GENERAL REVISION	3/24/03
6	CP	NAME CHANGE	2/17/06
7	CP	GENERAL REVISION	6/12/14

MEMBER OF NATIONAL CONCRETE MASONRY ASSOCIATION

CAST-CRETE USA, LLC. HIGH STRENGTH PRECAST AND PRESTRESSED CONCRETE LINTELS AND SILLS 6324 County Road 579 Seffner, Florida 33584 Phone: 813-623-4641

TITLE: CAST-CRETE 8" LINTEL FABRICATION DETAILS

FILE NAME: DBSUB3-14	DRAWN BY: CRAIG PARRINO, P.E. - REG. NO. 44756	SCALE: NOT TO SCALE
DATE: 06/07/96	CHECKED BY: CRAIG PARRINO, P.E. - REG. NO. 44756	DRAWING No. FDB SHEET 3 OF 3

STRUCTURAL CALCULATIONS

ADDITION TO RESIDENCE
LOCATED AT
200 N. SPLANADE DRIVE
MIAMI SPRINT, FLORIDA

PREPARED BY:

JOSE L. GUZMAN P.E.
4869 SW 75TH Ave, Miami, FL 33155
Tel.786.338.1082.

March 15, 2022

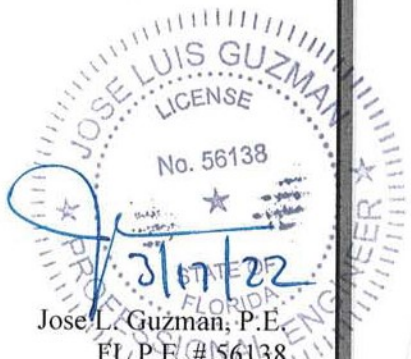

Jose L. Guzman, P.E.
FL P.E. # 56138

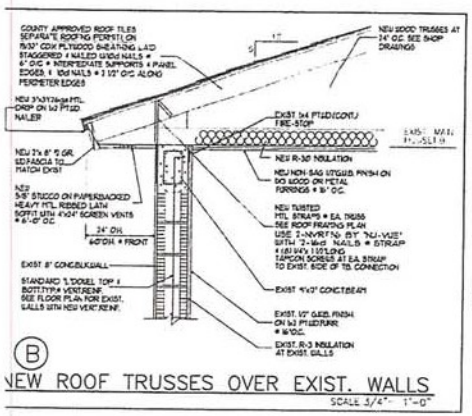

(B)

NEW ROOF TRUSSES OVER EXIST. WALLS

SCALE 3/4"= 1'-0"

GRAVITY & UPLIFT LOADS

A	GRAVITY: 375# NET UPLIFT: 325# USE 2-NVR7346 BY "NU-VUE" WITH 12-16d NAILS @ STRAP @ (8)1/4"x 1 1/2"LONG TAPCON SCREWS AT EA STRAP TO EXIST SIDE OF TB CONNECTION	E	GRAVITY: 3,756# NET UPLIFT: 3,706# USE (1)HURRICANE BRACKET SEE DETAIL SHEET A-3 ALSO USE AT OTHER SIDE
B	GRAVITY: 2,320# (DOUBLE STRAP) NET UPLIFT: 2,450# USE (1)-MAXITAUGE BY "NU-VUE" WITH 12-16d NAILS & 2-STRAPS @ 8-16d NAILS @ BEAT ALSO A 3/8"-Ø BOLT	BB	GRAVITY: 2,320# (DOUBLE STRAP) NET UPLIFT: 2,450# USE 2-NVR7448 BY "NU-VUE" WITH 12-16d NAILS @ EACH STRAP @ (8)1/4"x 1 1/2"LONG TAPCON SCREWS AT EA STRAP TO EXIST SIDE OF TB CONNECTION
C	GRAVITY: 1,120# NET UPLIFT: 1,090# USE 2-NVR7136 BY "NU-VUE" WITH 12-16d NAILS @ STRAP @ (8)1/4"x 1 1/2"LONG TAPCON SCREWS AT EA STRAP TO EXIST SIDE OF TB CONNECTION		
D	GRAVITY: 3,57'0# NET UPLIFT: 3,510# USE (1)SPECIAL BRACKET SEE DETAIL SHEET A-3 ALSO USE AT OTHER SIDE		

I CERTIFY THIS IS BEING DESIGNED TO WITHSTAND 175 MPH WIND SPEED ACCORDING TO ASCE 7-16 AS REQUIRED BY THE FLORIDA BUILDING CODE REVISED 2020 EDITION 7th EDITION

BEAM SCHEDULE:

AT (8'-0") A.F.F.) =8"x12" CONCRETE BEAM WITH 4#5 CONT. & (2) 60° NG BENT BARS AT CORNERS. PROVIDE #3 TIES (4) FROM RNERS AT 12" REM. AT 48"O.C.
L NEW TIE BEAMS TO MATCH EXISTING TB. ELEVATION
1 AT (8'-0") A.F.F.) =8"x12" CONCRETE BEAM WITH 2#5 TOP, 2#5 BOT TH (2) #5 90° LONG BENT BARS AT CORNERS. PROVIDE #3 TIES (4) FROM RNERS AT 3" REM. AT 5 "O.C.

ROOF VENTILATION CALCULATIONS:

OR TRUSS PORTION ONLY
(RIDGE)
OPTIONAL (NOT PROVIDED)
QUIRED 1/150 VENT TO CEILING RATIO
W TRUSS ROOF AREA = 2,950 SQ. FT. "WITH OVERHANG"
950/150 = 19.66 SQ. FT. OF VENTING AREA REQUIRED
SIGN SELECTION: 4"X24" ALUM. SCREEN = 0.66 S.Q. FT.
TA REQ'D. 19.66 S.Q. FT. / 0.66 = 30 PCS.
ROPOSED PROVIDED 32 PCS

FOR WOOD AND FRAMING NOTES SEE SHEET A-3

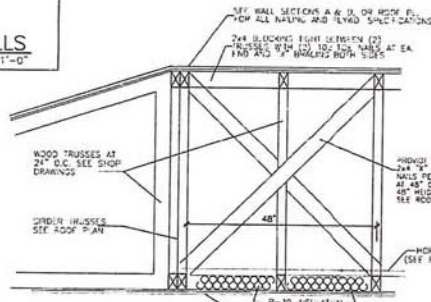

TYP. CROSS BRACING SECTION

SCALE: 3/4"= 1'-0"

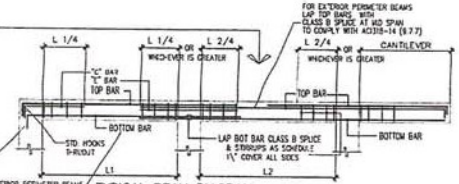

TYPICAL BEAM DIAGRAM

"C" BARS - ARE TOP BARS AT NON-CONTINUOUS ENDS
"L" BARS - ARE TOP BARS OVER RIGHT INTERIOR SUPPORTS
TOP BARS - CALLED FOR AS CONTINUOUS, WHEN SPLICED, SHALL BE SPLICED IN THE MIDDLE THIRD OF THE SPAN

-14 R9.7.7
ERIOR PERIMETER BEAMS
least one-quarter
maximum positive
t reinforcement,
t less than two
r strands, shall
ntinuous. (b)
dinal
cement shall be
d by closed
in accordance
3.7.1.6 or hoops
the clear span of
am.

WOOF TRUSS ROOF DESIGN LOADS:

T.C.L.L.	= 30 P.S.F.
T.C.D.L.	= 15 P.S.F.
B.C.D.L.	= 10 P.S.F.
TOTAL	= 55 P.S.F.

THIS IS A ROOF TRUSS TYPE SYSTEM

NOTE: ROOF TRUSS SHOP DRAWINGS AND ENGINEERING PACKAGE TO BE SUBMITTED AND PROCESSED UNDER A SEPARATE PERMIT.

NOTE ALL NEW ROOFING SYSTEM MATERIALS TO HAVE A VALID N.O.A. PRODUCT APPROVAL & TO BE SUBMITTED FOR REVIEW AT TIME OF ROOFING PERMIT APPLICATION UNDER SEPARATE SUB PERMIT

NOTE ALL EXTERIOR WALL COVERING AND ROOF ASSEMBLIES AND ROOF TOP STRUCTURES SHALL COMPLY WITH HI-VELOCITY HURRICANE ZONE AS PER CHAPTER 44, R4401.1 & R4402.1 OF THE F.B.C. RESIDENTIAL 2020-7th EDITION

NOTE: GENERAL CONTRACTOR TO FIELD VERIFY ALL EXISTING FIELD CONDITIONS & DIMENSIONS WITH ALL PROPOSED NEW CONSTRUCTION PRIOR TO ANY NEW CONSTRUCTION + INSTALLATION OR INSTALLATIONS INCLUDING BUT NOT LIMITED TO NEW TRUSS SIZES PITCH LENGTHS DIMENSIONS ETC

NOTE: FOR ALL STRAPS SPECIFIED SEE SPECS ON PRODUCT APPROVAL ATTACHED ALL STRAPS TO BE 18 GA "SIMPSON" OR APPROVED EQUAL

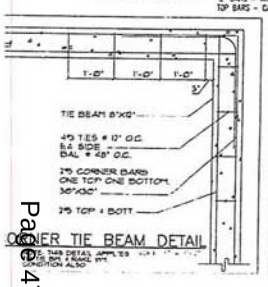

CORNER TIE BEAM DETAIL

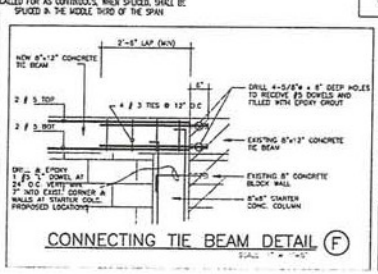

CONNECTING TIE BEAM DETAIL (F)

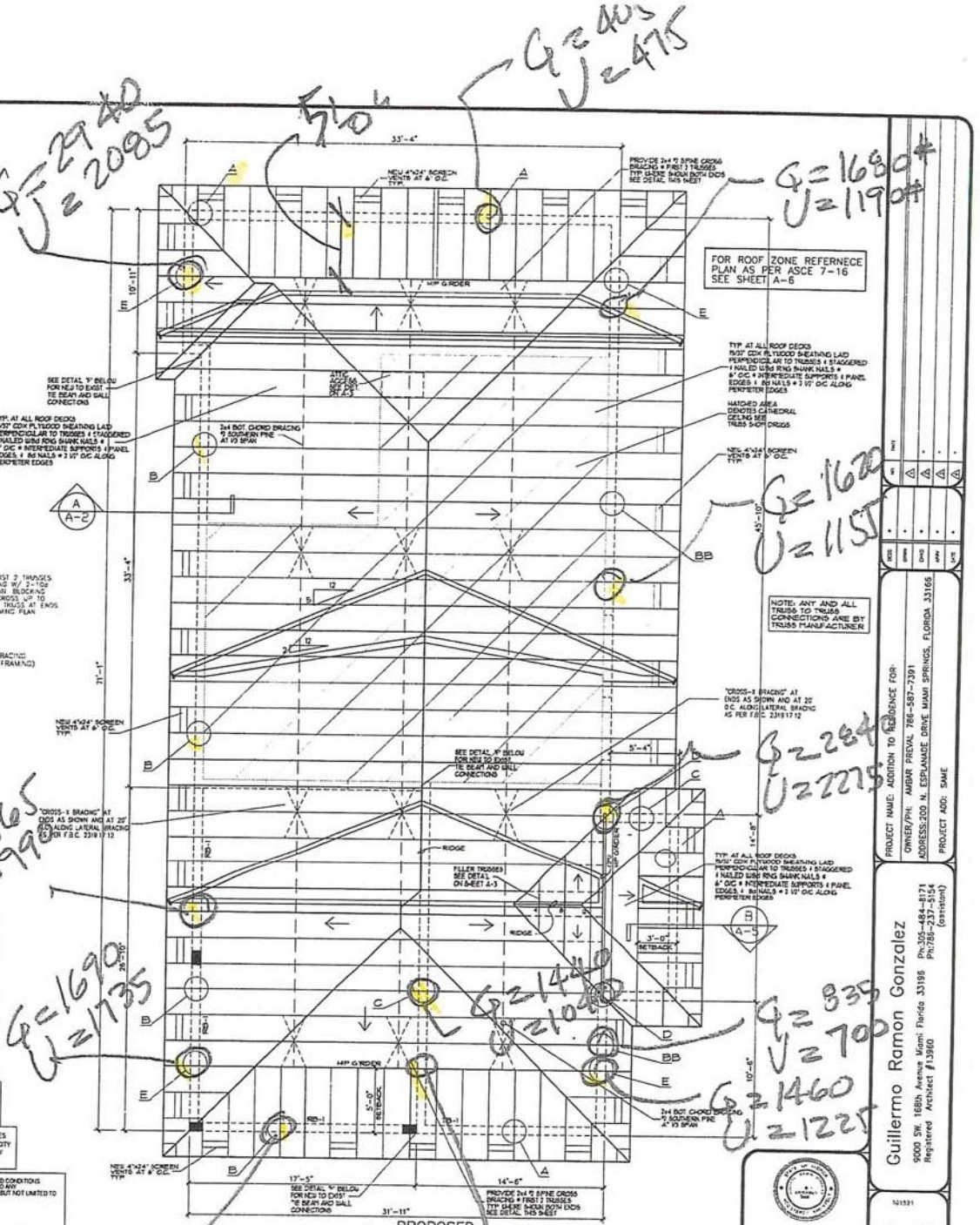

PROJECT NAME: ADDITION TO RESIDENCE FOR:
OWNER/PH#: AMBAR PRIVAL 786-587-7391
ADDRESS: 200 N. ESPLANADE DRIVE MIAMI SPRINGS, FLORIDA 33166
PROJECT ADD: SAME

Guillermo Ramon Gonzalez
9000 SW. 168th Avenue Miami Florida 33196
Registered Architect #13960
Ph:305-484-8171
Ph:786-237-5154 (assistant)

121521

A-5

JOSE GUZMAN P.E.
16581 SW 64 terrace
MIAMI, FLORIDA
786-338-1082
JGUZMANALBA@AOL.COM

JOB _____

SHEET NO. _____ OF _____

CALCULATED BY _____ DATE _____

CHECKED BY _____ DATE _____

SCALE _____

ROOF UPLIFT / GRAVITY.

① (36-10)2 = 52'

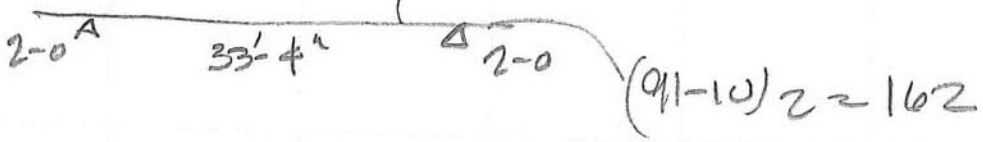

$U = \frac{33.33}{2} \cdot 52 + 162 \times 2 = 1190\#$

$Q = \left(\frac{33.33}{2} + 2\right) 90 = 1680\#$

②



$U = \frac{31.92}{2} \cdot 52 + 162 \times 2 = 1155\#$

$Q = \left(\frac{31.92}{2} + 2\right) 90 = 1620\#$

③

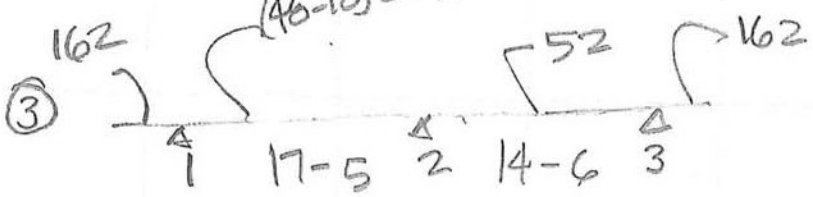

$U_1 = 2 \times 162 + \frac{17.42}{2} \cdot 76 = 990$

$U_2 = \frac{17.42}{2} \times 76 + \frac{14.5}{2} 52 = 1040$

$U_3 = \frac{14.5}{2} \cdot 52 + 2 \times 162 = 700$

JOSE GUZMAN P.E.
16581 SW 64 terrace
MIAMI, FLORIDA
786-338-1082
JGUZMANALBA@AOL.COM

JOB
SHEET NO. OF
CALCULATED BY DATE
CHECKED BY DATE
SCALE

(3) CONT.

$$Q_1 = \left(\frac{17.42}{2} + 2\right) 90 = 965$$

$$Q_2 = \frac{17.5 + 14.5}{2} \cdot 90 = 1440$$

$$Q_3 = \left(\frac{14.5}{2} + 2\right) 90 = 835\ \#$$

(4)

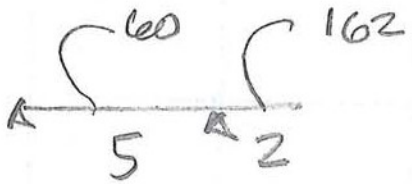

$V\ 2.5 \times 60 + 2 \times 162 = 475$

$Q = 4.5 \times 90 = 405$

(5)

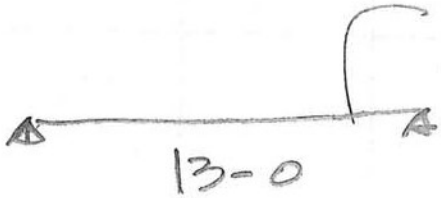

$V = 19.42/2 \times 36 = 350$
$Q = \times 4.5 = 437$

$V = 350 \times 6.5 = 2275\ \#$

$Q = 437 \times 6.5 = 2840\ \#$

JOSE GUZMAN P.E.
16581 SW 64 terrace
MIAMI, FLORIDA
786-338-1082
JGUZMANALBA@AOL.COM

JOB _____

SHEET NO. _____ OF _____

CALCULATED BY _____ DATE _____

CHECKED BY _____ DATE _____

SCALE _____

AT OPEN AREA.

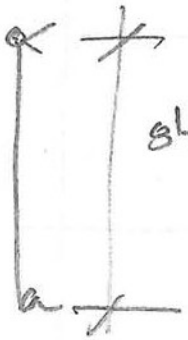

$8'-2 + 0.67 = 8'-10''$

wind load = 61.61

CLOSED AREAS



$8'-10''$ wind load = 49.1 psf

Title :
Dsgnr:
Description :

Job #
Date: 12:58PM, 13 MAR 22

Scope :

Masonry Wall Design

Description

General Information

Code Ref: ACI 530-02

Wall Height	8.83 ft	Seismic Factor	0.0000	f'm	1,500.0 psi
Parapet Height	0.00 ft	Calc of Em = f'm *	900.00	Fs	24,000.0 psi
		Duration Factor	1.000	Special Inspection	
Thickness	8.0 in	Wall Wt Mult.	1.000	Grout @ Rebar Only	
Rebar Size	5			Normal Weight Block	
Rebar Spacing	40 in			Equivalent	
Depth to Rebar	3.810 in @ Center			Solid Thickness	4.700 in

Loads

Uniform Load		Concentric Axial Load		Wind Load	61.610 psf
Dead Load	0.000 #/ft	Dead Load	0.000 #/ft		
Live Load	0.000 #/ft	Live Load	0.000 #/ft		
Load Eccentricity	0.000 in	Roof Load			
Roof Load					

Design Values

E	1,350,000 psi	Rebar Area	0.093 in2	np	0.04370	j	0.91495
n : Es / Em	21.481	Radius of Gyration	2.521 in	k	0.25514	2 / kj	8.56756
Wall Weight	56.000 psf	Moment of Inertia	358.350 in4				

Max Allow Axial Stress = 0.25 f'm (1-(h/140r)^2) * SpInsp — 341.19 psi
Allow Masonry Bending Stress = 0.33 f'm * SpInsp = — 495.00 psi
Allow Steel Bending Stress = — 24,000.00 psi

Load Combination & Stress Details Summary

	Moment in-#	Axial Load lbs	Bending Stresses Steel psi	Bending Stresses Masonry psi	Axial Compression psi
Top of Wall					
DL + LL	0.0	0.0	0.0	0.0	0.00
DL + LL + Wind	0.0	0.0	0.0	0.0	0.00
DL + LL + Seismic	0.0	0.0	0.0	0.0	0.00
Between Base & Top of Wall					
DL + LL	0.0	247.2	0.0	0.0	4.38
DL + LL + Wind	7,205.5	247.2	22,225.7	354.4	4.38
DL + LL + Seismic	0.0	247.2	0.0	0.0	4.38

Summary

8.83ft high wall with 0.00ft parapet, Normal Block w/ 8.00in wall w/ #5 bars at 40.00ino.c. at center

Max. Bending Compressive Stress	358.78	OK
Allowable	495.00	OK
Max. Axial Only Compressive Stress	4.38	psi
Allowable	341.19	OK
Max Steel Bending Stress	22,225.75	psi
Allowable	24,000.00	OK

Description

Final Loads & Moments

Wall Weight moment @ Mid Ht	247.24 lbs	Wind Moment @ Mid Ht	7,205.49 in-#
		Seismic Moment @ Mid Ht	0.00 in-#
Dead Load Moment @ Top of Wall	0.00 in-#		
Dead Load Moment @ Mid Ht	0.00 in-#	Total Dead Load	0.00 lbs
		Total Live Load	0.00 lbs
Live Load Moment @ Top of Wall	0.00 in-#		
LiveLoad Moment @ Mid Ht	0.00 in-#		
Maximum Allow Moment for Applied Axial Load =		7,780.70 in-#	
Maximum Allow Axial Load for Applied Moment =		19,243.18 lbs	

MecaWind v2403

Software Developer: Meca Enterprises Inc., www.meca.biz, Copyright © 2020

Calculations Prepared by:
True
Address
City, State,
Date: Mar 13, 2022
Designer: 0

Calculations Prepared For:
Client: 0
Project #: 0
Location: 0

File Location : H:\0-ALFONSO\AMBER PRIVAL\CLOSED.wnd

Basic Wind Parameters

Wind Load Standard	= ASCE 7-16	Exposure Category	= C
Wind Design Speed	= 175.0 mph	Risk Category	= II
Structure Type	= Building	Building Type	= Enclosed

General Wind Settings

Incl_LF	= Include ASD Load Factor of 0.6 in Pressures	= True
DynType	= Dynamic Type of Structure	= Rigid
Zg	= Altitude (Ground Elevation) above Sea Level	= 0.000 ft
Bdist	= Base Elevation of Structure	= 0.000 ft
SDB	= Simple Diaphragm Building	= True
MWFRSType	= MWFRS Method Selected	= Ch 27 Pt 1

Topographic Factor per Fig 26.8-1

Topo	= Topographic Feature	= None
Kzt	= Topographic Factor	= 1.000

Building Inputs

RoofType:	Building Roof Type	= Hipped	W :	Width Perp to Ridge	= 34.000 ft
L :	Length Along Ridge	= 71.000 ft	EHt :	Eave Height	= 8.500 ft
Hip :	Ridge Hipped Length	= 4.000 ft	RE :	Roof Entry Method	= Slope
Slope :	Slope of Roof	= 5.0 :12	Theta :	Roof Slope	= 22.62 Deg
Par :	Is there a Parapet	= False			

Exposure Constants per Table 26.11-1:

Alpha:	Table 26.11-1 Const	= 9.500	Zg:	Table 26.11-1 Const	= 900.000 ft
At:	Table 26.11-1 Const	= 0.105	Bt:	Table 26.11-1 Const	= 1.000
Am:	Table 26.11-1 Const	= 0.154	Bm:	Table 26.11-1 Const	= 0.650
C:	Table 26.11-1 Const	= 0.200	Eps:	Table 26.11-1 Const	= 0.200

Overhang Inputs:

Std	= Overhangs on all sides are the same	= True
OHType	= Type of Roof Wall Intersections	= Sofit
OH	= Overhang of Roof Beyond Wall	= 2.000 ft

Main Wind Force Resisting System (MWFRS) Calculations per Ch 27 Part 1:

h	= Mean Roof Height above grade	= 12.458 ft
Kh	= Z < 15 ft [4.572 m]--> (2.01 * (15/zg)^(2/Alpha) {Table 26.10-1}	= 0.849
Kzt	= Topographic Factor is 1 since no Topographic feature specified	= 1.000
Kd	= Wind Directionality Factor per Table 26.6-1	= 0.85
Zg	= Elevation above Sea Level	= 0.000 ft
Ke	= Ground Elevation Factor: Ke = e^-(0.0000362*Zg) {Table 26.9-1}	= 1.000
GCPi	= Ref Table 26.13-1 for Enclosed Building	= +/-0.18
RA	= Roof Area	= 2701.43 sq ft
LF	= Load Factor based upon ASD Design	= 0.60
qh	= (0.00256 * Kh * Kzt * Kd * Ke * V^2) * LF	= 33.94 psf
qin	= For Negative Internal Pressure of Enclosed Building use qh*LF	= 33.94 psf
qip	= For Positive Internal Pressure of Enclosed Building use qh*LF	= 33.94 psf

Gust Factor Calculation:

Gust Factor Category I Rigid Structures - Simplified Method		
G1	= For Rigid Structures (Nat. Freq.>1 Hz) use 0.85	= 0.85
Gust Factor Category II Rigid Structures - Complete Analysis		
Zm	= Max(0.6 * Ht, Zmin)	= 15.000 ft
Izm	= Cc * (33 / Zm) ^ 0.167	= 0.228
Lzm	= L * (Zm / 33) ^ Eps	= 427.057
Q	= (1 / (1 + 0.63 * ((B + Ht) / Lzm)^0.63))^0.5	= 0.930

G2	= 0.925*((1+0.7*Izm*3.4*Q)/(1+0.7*3.4*Izm))	
Gust Factor Used in Analysis		= 0.888
G	= Lessor Of G1 Or G2	
		= 0.850

MWFRS Wind Normal to Ridge (Ref Fig 27.3-1)

h	= Mean Roof Height Of Building	= 12.458 ft
RHt	= Ridge Height Of Roof	= 16.417 ft
B	= Horizontal Dimension Of Building Normal To Wind Direction	= 71.000 ft
L	= Horizontal Dimension Of building Parallel To Wind Direction	= 34.000 ft
L/B	= Ratio Of L/B used For Cp determination	= 0.479
h/L	= Ratio Of h/L used For Cp determination	= 0.366
Slope	= Slope of Roof	= 22.62 Deg
OH_Top_+Y	= Overhang Top +Y (Leeward)	= -0.6, -0.6
OH_Top_-Y	= Overhang Top Windward Edge	= 0.18, -0.29
OH_X	= Overhang Top +/-X Coeff (0 to h/2) (0.000 ft to 2.000 ft)	= -0.18, -0.9
OH_X	= Overhang Top +/-X Coeff (0 to h/2) (2.000 ft to 6.229 ft)	= -0.18, -0.9
OH_X	= Overhang Top +/-X Coeff (h/2 to h) (6.229 ft to 12.458 ft)	= -0.18, -0.9
OH_X	= Overhang Top +/-X Coeff (h to 2h) (12.458 ft to 19.000 ft)	= -0.18, -0.5
OH_X	= Overhang Top +/-X Coeff (h to 2h) (19.000 ft to 24.917 ft)	= -0.18, -0.5
OH_X	= Overhang Top +/-X Coeff (>2h) (>24.917 ft)	= -0.18, -0.3
OH_X	= Overhang Top +/-X Coeff (>2h) (>36.000 ft)	= -0.18, -0.3
Roof_LW	= Roof (Leeward)	= -0.6, -0.6
Roof_WW	= Roof (Windward)	= 0.18, -0.29
Roof_X	= Roof +/-X Coeff (0 to h/2) (2.000 ft to 6.229 ft)	= -0.18, -0.9
Roof_X	= Roof +/-X Coeff (h/2 to h) (6.229 ft to 12.458 ft)	= -0.18, -0.9
Roof_X	= Roof +/-X Coeff (h to 2h) (12.458 ft to 24.917 ft)	= -0.18, -0.5
Roof_X	= Roof +/-X Coeff (>2h) (>24.917 ft)	= -0.18, -0.3
Sofit_-Y	= Overhang Sofit -Y	= 0.8, 0.8

Cp_WW	= Windward Wall Coefficient (All L/B Values)	= 0.80
Cp_LW	= Leward Wall Coefficient using L/B	= -0.50
Cp_SW	= Side Wall Coefficient (All L/B values)	= -0.70
GCpn_WW	= Parapet Combined Net Pressure Coefficient (Windward Parapet)	= 1.50
GCpn_LW	= Parapet Combined Net Pressure Coefficient (Leeward Parapet)	= -1.00

Wall Wind Pressures based On Positive Internal Pressure (+GCPi) - Normal to Ridge
All wind pressures include a load factor of 0.6

Elev ft	Kz	Kzt	qz psf	GCPi	Windward Press psf	Leeward Press psf	Side Press psf	Total Press psf	Minimum Pressure* psf
8.50	0.849	1.000	33.94	0.18	16.97	-20.53	-26.30	37.51	9.60

Wall Wind Pressures based on Negative Internal Pressure (-GCPi) - Normal to Ridge
All wind pressures include a load factor of 0.6

Elev ft	Kz	Kzt	qz psf	GCPi	Windward Press psf	Leeward Press psf	Side Press psf	Total Press psf	Minimum Pressure* psf
8.50	0.849	1.000	33.94	-0.18	29.19	-8.32	-14.09	37.51	9.60

Notes Wall Pressures:

Kz	= Velocity Press Exp Coeff	Kzt	= Topographical Factor
qz	= 0.00256*Kz*Kzt*Kd*V^2	GCPi	= Internal Press Coefficient
Side	= qh * G * Cp_SW - qip * +GCPi	Windward	= qz * G * Cp_WW - qip * +GCPi
Leeward	= qh * G * Cp_LW - qip * +GCPi	Total	= Windward Press - Leeward Press

* Minimum Pressure: Para 27.1.5 no less than 9.60 psf (Incl LF) applied to Walls
\+ Pressures Acting TOWARD Surface - Pressures Acting AWAY from Surface

Roof Wind Pressures for Positive & Negative Internal Pressure (+/- GCPi) - Normal to Ridge
All wind pressures include a load factor of 0.6

Roof Var	Start Dist ft	End Dist ft	Cp_min	Cp_max	GCPi	Pressure Pn_min* psf	Pressure Pp_min* psf	Pressure Pn_max psf	Pressure Pp_max psf
OH_Top_+Y	N/A	N/A	-0.600	-0.600	0.180	-11.20	-23.42	-11.20	-23.42
OH_Top_+Y	N/A	N/A	-0.600	-0.600	0.180	-11.20	-23.42	-11.20	-23.42

OH_Top_-Y	N/A	N/A	0.180	-0.290	0.180	11.30	-0.92	-2.26	-14.48
OH_Top_-Y	N/A	N/A	0.180	-0.290	0.180	11.30	-0.92	-2.26	-14.48
OH_X (+X)	0.000	2.000	-0.180	-0.900	0.180	0.92	-11.30	-19.86	-32.07
OH_X (-X)	0.000	2.000	-0.180	-0.900	0.180	0.92	-11.30	-19.86	-32.07
OH_X (+X)	2.000	6.229	-0.180	-0.900	0.180	0.92	-11.30	-19.86	-32.07
OH_X (-X)	2.000	6.229	-0.180	-0.900	0.180	0.92	-11.30	-19.86	-32.07
OH_X (+X)	6.229	12.458	-0.180	-0.900	0.180	0.92	-11.30	-19.86	-32.07
OH_X (-X)	6.229	12.458	-0.180	-0.900	0.180	0.92	-11.30	-19.86	-32.07
OH_X (+X)	12.458	19.000	-0.180	-0.500	0.180	0.92	-11.30	-8.32	-20.53
OH_X (-X)	12.458	19.000	-0.180	-0.500	0.180	0.92	-11.30	-8.32	-20.53
OH_X (+X)	19.000	24.917	-0.180	-0.500	0.180	0.92	-11.30	-8.32	-20.53
OH_X (-X)	19.000	24.917	-0.180	-0.500	0.180	0.92	-11.30	-8.32	-20.53
OH_X (+X)	24.917	36.000	-0.180	-0.300	0.180	0.92	-11.30	-2.55	-14.76
OH_X (-X)	24.917	36.000	-0.180	-0.300	0.180	0.92	-11.30	-2.55	-14.76
OH_X (+X)	36.000	38.000	-0.180	-0.300	0.180	0.92	-11.30	-2.55	-14.76
OH_X (-X)	36.000	38.000	-0.180	-0.300	0.180	0.92	-11.30	-2.55	-14.76
Roof_LW	N/A	N/A	-0.600	-0.600	0.180	-11.20	-23.42	-11.20	-23.42
Roof_WW	N/A	N/A	0.180	-0.290	0.180	11.30	-0.92	-2.26	-14.48
Roof_X (+X)	2.000	6.229	-0.180	-0.900	0.180	0.92	-11.30	-19.86	-32.07
Roof_X (-X)	2.000	6.229	-0.180	-0.900	0.180	0.92	-11.30	-19.86	-32.07
Roof_X (+X)	6.229	12.458	-0.180	-0.900	0.180	0.92	-11.30	-19.86	-32.07
Roof_X (-X)	6.229	12.458	-0.180	-0.900	0.180	0.92	-11.30	-19.86	-32.07
Roof_X (+X)	12.458	24.917	-0.180	-0.500	0.180	0.92	-11.30	-8.32	-20.53
Roof_X (-X)	12.458	24.917	-0.180	-0.500	0.180	0.92	-11.30	-8.32	-20.53
Roof_X (+X)	24.917	36.000	-0.180	-0.300	0.180	0.92	-11.30	-2.55	-14.76
Roof_X (-X)	24.917	36.000	-0.180	-0.300	0.180	0.92	-11.30	-2.55	-14.76
Sofit_-Y	N/A	N/A	0.800	0.800	0.180	29.19	16.97	29.19	16.97

Notes Roof Pressures:
Start Dist = Start Dist from Windward Edge End Dist = End Dist from Windward Edge
Cp_Max = Largest Coefficient Magnitude Cp_Min = Smallest Coefficient Magnitude
Pp_max = qh*G*Cp_max - qip*(+GCPi) Pn_max = qh*G*Cp_max - qin*(-GCpi)
Pp_min* = qh*G*Cp_min - qip*(+GCPi) Pn_min* = qh*G*Cp_min - qin*(-GCPi)
OH = Overhang X = Dir along Ridge Y = Dir Perpendcular to Ridge Z = Vertical
* The smaller uplift pressures due to Cp_Min can become critical when wind is combined with roof live load or snow load; load combinations are given in ASCE 7
+ Pressures Acting TOWARD Surface - Pressures Acting AWAY from Surface

MWFRS Wind Parallel to Ridge (Ref Fig 27.3-1)

h	= Mean Roof Height Of Building	= 12.458 ft
RHt	= Ridge Height Of Roof	= 16.417 ft
B	= Horizontal Dimension Of Building Normal To Wind Direction	= 34.000 ft
L	= Horizontal Dimension Of building Parallel To Wind Direction	= 71.000 ft
L/B	= Ratio Of L/B used For Cp determination	= 2.088
h/L	= Ratio Of h/L used For Cp determination	= 0.175
Slope	= Slope of Roof	= 22.62 Deg
Hip_End	= Hipped End Coeff (0 to h/2) (2.000 ft to 6.229 ft)	= -0.18, -0.9
Hip_End	= Hipped End Coeff (h/2 to h) (6.229 ft to 12.458 ft)	= -0.18, -0.9
Hip_End	= Hipped End Coeff (h to 2h) (12.458 ft to 24.917 ft)	= -0.18, -0.5
Hip_End	= Hipped End Coeff (>2h) (>24.917 ft)	= -0.18, -0.3
Hip_End	= Hipped End Coeff (>2h) (>39.500 ft)	= -0.18, -0.3
OH_Bot	= Sofit (Windward Face Only)	= 0.8, 0.8
OH_Top	= Overhang Top Coeff (0 to h/2) (0.000 ft to 2.000 ft)	= -0.18, -0.9
OH_Top	= Overhang Top Coeff (0 to h/2) (2.000 ft to 6.229 ft)	= -0.18, -0.9
OH_Top	= Overhang Top Coeff (h/2 to h) (6.229 ft to 12.458 ft)	= -0.18, -0.9
OH_Top	= Overhang Top Coeff (h to 2h) (12.458 ft to 24.917 ft)	= -0.18, -0.5
OH_Top	= Overhang Top Coeff (>2h) (>24.917 ft)	= -0.18, -0.3
OH_Top	= Overhang Top Coeff (>2h) (>37.500 ft)	= -0.18, -0.3
OH_Top	= Overhang Top Coeff (>2h) (>73.000 ft)	= -0.18, -0.3
Roof	= Roof Coeff (0 to h/2) (2.000 ft to 6.229 ft)	= -0.18, -0.9
Roof	= Roof Coeff (h/2 to h) (6.229 ft to 12.458 ft)	= -0.18, -0.9
Roof	= Roof Coeff (h to 2h) (12.458 ft to 24.917 ft)	= -0.18, -0.5
Roof	= Roof Coeff (>2h) (>24.917 ft)	= -0.18, -0.3
Cp_WW	= Windward Wall Coefficient (All L/B Values)	= 0.80
Cp_LW	= Leward Wall Coefficient using L/B	= -0.30
Cp_SW	= Side Wall Coefficient (All L/B values)	= -0.70
GCpn_WW	= Parapet Combined Net Pressure Coefficient (Windward Parapet)	= 1.50
GCpn_LW	= Parapet Combined Net Pressure Coefficient (Leeward Parapet)	= -1.00

Wall Wind Pressures based On Positive Internal Pressure (+GCPi) - Parallel to Ridge

Guillermo Ramon Gonzalez RA

9000 SW. 168th Ave. Miami, Florida 33196
Telephone: (305) 484-8171

Miami Springs Building Department
201 Westward Drive
Miami Springs, Florida 33166

October 4, 2023

Owner: Ambar Preval
Project Address: 200 N. Esplanade Drive Miami Springs, Florida 33166
Application Number: 21-1143

Architect's Certification

This is to certify that I, Guillermo Ramon Gonzalez, visited the site and inspected the installation of the following components under the permit number stated above. The methodology utilized consisted in visual inspection performed on site with client & truss installer.

1-The truss placement and installation for trusses over 35' long or 6' high as per CMDC section 8-22 special inspector from.

A- The installation of the trusses was done according to the F.B.C. Truss plates and straps were inspected for proper code compliance and structural integrity. The installations of the trusses and straps reflects what is shown on the approved plans including the nailing and tapcons screws of the straps to the sides of existing tie beams in addition to the embedded straps.

Thus I hereby certify that all work including the items A mentioned above were found to be functional and in accordance with the approved plans and "F.B.C." 2020 -7th Edition.

Respectfully.

RA.# 13960
License Number

Signature, Seal and Date
Guillermo Ramon Gonzalez

Guillermo Ramon Gonzalez RA.

9000 SW. 168th Avenue.
Miami, Florida 33196
Telephone: (305) 484-8171

City of Miami Springs Building Department
201 Westward Drive
Miami Springs, Florida 33166

June 13, 2022

Owner: Ambar Preval
Project Address: 200 N. Esplanade Drive Miami Springs, Florida 33166
Application Number: 21-1143

In Site Bearing Capacity Per F.B.C. 2020-7th Edition

Dear Sir,

I hereby attest that the site has been observed and the foundation conditions are similar to those upon which the designed is based. In site bearing capacity 2000 P.S.F.

If we can be of further service, please call.

Respectfully.

RA.# 13960
License Number

Signature, Seal and Date
Guillermo Ramon Gonzalez

All wind pressures include a load factor of 0.6

Elev ft	Kz	Kzt	qz psf	GCPi	Windward Press psf	Leeward Press psf	Side Press psf	Total Press psf	Minimum Pressure* psf
8.50	0.849	1.000	33.94	0.18	16.97	-14.64	-26.30	31.61	9.60

Wall Wind Pressures based on Negative Internal Pressure (-GCPi) - Parallel to Ridge

All wind pressures include a load factor of 0.6

Elev ft	Kz	Kzt	qz psf	GCPi	Windward Press psf	Leeward Press psf	Side Press psf	Total Press psf	Minimum Pressure* psf
8.50	0.849	1.000	33.94	-0.18	29.19	-2.42	-14.09	31.61	9.60

Notes Wall Pressures:

Kz = Velocity Press Exp Coeff
qz = 0.00256*Kz*Kzt*Kd*V^2
Side = qh * G * Cp_SW - qip * +GCPi
Leeward = qh * G * Cp_LW - qip * +GCPi
Kzt = Topographical Factor
GCPi = Internal Press Coefficient
Windward = qz * G * Cp_WW - qip * +GCPi
Total = Windward Press - Leeward Press
* Minimum Pressure: Para 27.1.5 no less than 9.60 psf (Incl LF) applied to Walls
+ Pressures Acting TOWARD Surface
- Pressures Acting AWAY from Surface

Roof Wind Pressures for Positive & Negative Internal Pressure (+/- GCPi) - Parallel to Ridge

All wind pressures include a load factor of 0.6

Roof Var	Start Dist ft	End Dist ft	Cp_min	Cp_max	GCPi	Pressure Pn_min* psf	Pressure Pp_min* psf	Pressure Pn_max psf	Pressure Pp_max psf
Hip_End (-X)	2.000	6.229	-0.180	-0.900	0.180	0.92	-11.30	-19.86	-32.07
Hip_End (-X)	6.229	12.458	-0.180	-0.900	0.180	0.92	-11.30	-19.86	-32.07
Hip_End (-X)	12.458	24.917	-0.180	-0.500	0.180	0.92	-11.30	-8.32	-20.53
Hip_End (-X)	24.917	35.500	-0.180	-0.300	0.180	0.92	-11.30	-2.55	-14.76
Hip_End (+X)	39.500	73.000	-0.180	-0.300	0.180	0.92	-11.30	-2.55	-14.76
OH_Bot	N/A	N/A	0.800	0.800	0.180	29.19	16.97	29.19	16.97
OH_Top (-X)	0.000	2.000	-0.180	-0.900	0.180	0.92	-11.30	-19.86	-32.07
OH_Top (-X)	0.000	2.000	-0.180	-0.900	0.180	0.92	-11.30	-19.86	-32.07
OH_Top (-X)	0.000	2.000	-0.180	-0.900	0.180	0.92	-11.30	-19.86	-32.07
OH_Top (-X)	0.000	2.000	-0.180	-0.900	0.180	0.92	-11.30	-19.86	-32.07
OH_Top (+Y)	0.000	2.000	-0.180	-0.900	0.180	0.92	-11.30	-19.86	-32.07
OH_Top (-Y)	0.000	2.000	-0.180	-0.900	0.180	0.92	-11.30	-19.86	-32.07
OH_Top (+Y)	2.000	6.229	-0.180	-0.900	0.180	0.92	-11.30	-19.86	-32.07
OH_Top (-Y)	2.000	6.229	-0.180	-0.900	0.180	0.92	-11.30	-19.86	-32.07
OH_Top (+Y)	6.229	12.458	-0.180	-0.900	0.180	0.92	-11.30	-19.86	-32.07
OH_Top (-Y)	6.229	12.458	-0.180	-0.900	0.180	0.92	-11.30	-19.86	-32.07
OH_Top (+Y)	12.458	24.917	-0.180	-0.500	0.180	0.92	-11.30	-8.32	-20.53
OH_Top (-Y)	12.458	24.917	-0.180	-0.500	0.180	0.92	-11.30	-8.32	-20.53
OH_Top (+Y)	24.917	37.500	-0.180	-0.300	0.180	0.92	-11.30	-2.55	-14.76
OH_Top (-Y)	24.917	37.500	-0.180	-0.300	0.180	0.92	-11.30	-2.55	-14.76
OH_Top (+Y)	37.500	73.000	-0.180	-0.300	0.180	0.92	-11.30	-2.55	-14.76
OH_Top (-Y)	37.500	73.000	-0.180	-0.300	0.180	0.92	-11.30	-2.55	-14.76
OH_Top (+X)	73.000	75.000	-0.180	-0.300	0.180	0.92	-11.30	-2.55	-14.76
OH_Top (+X)	73.000	75.000	-0.180	-0.300	0.180	0.92	-11.30	-2.55	-14.76
OH_Top (+X)	73.000	75.000	-0.180	-0.300	0.180	0.92	-11.30	-2.55	-14.76
OH_Top (+X)	73.000	75.000	-0.180	-0.300	0.180	0.92	-11.30	-2.55	-14.76
OH_Top (+Y)	73.000	75.000	-0.180	-0.300	0.180	0.92	-11.30	-2.55	-14.76
OH_Top (-Y)	73.000	75.000	-0.180	-0.300	0.180	0.92	-11.30	-2.55	-14.76
Roof (+Y)	2.000	6.229	-0.180	-0.900	0.180	0.92	-11.30	-19.86	-32.07
Roof (-Y)	2.000	6.229	-0.180	-0.900	0.180	0.92	-11.30	-19.86	-32.07
Roof (+Y)	6.229	12.458	-0.180	-0.900	0.180	0.92	-11.30	-19.86	-32.07
Roof (-Y)	6.229	12.458	-0.180	-0.900	0.180	0.92	-11.30	-19.86	-32.07
Roof (+Y)	12.458	24.917	-0.180	-0.500	0.180	0.92	-11.30	-8.32	-20.53
Roof (-Y)	12.458	24.917	-0.180	-0.500	0.180	0.92	-11.30	-8.32	-20.53
Roof (+Y)	24.917	73.000	-0.180	-0.300	0.180	0.92	-11.30	-2.55	-14.76
Roof (-Y)	24.917	73.000	-0.180	-0.300	0.180	0.92	-11.30	-2.55	-14.76

Notes Roof Pressures:

```
Start Dist = Start Dist from Windward Edge  End Dist = End Dist from Windward Edge
Cp_Max     = Largest Coefficient Magnitude  Cp_Min   = Smallest Coefficient Magnitude
Pp_max     = qh*G*Cp_max - qip*(+GCPi)      Pn_max   = qh*G*Cp_max - qin*(-GCpi)
Pp_min*    = qh*G*Cp_min - qip*(+GCPi)      Pn_min*  = qh*G*Cp_min - qin*(-GCPi)
OH = Overhang   X = Dir along Ridge   Y = Dir Perpendcular to Ridge  Z = Vertical
* The smaller uplift pressures due to Cp_Min can become critical when wind is combined
  with roof live load or snow load;  load combinations are given in ASCE 7
+ Pressures Acting TOWARD Surface          - Pressures Acting AWAY from Surface
```

Components and Cladding (C&C) Calculations per Ch 30 Part 1:

h/W	= Ratio of mean roof height to building width	= 0.366
h/L	= Ratio of mean roof height to building length	= 0.175
h	= Mean Roof Height above grade	= 12.458 ft
Kh	= Z < 15 ft [4.572 m]--> (2.01 * (15/zg)^(2/Alpha) {Table 26.10-1}	= 0.849
Kzt	= Topographic Factor is 1 since no Topographic feature specified	= 1.000
Kd	= Wind Directionality Factor per Table 26.6-1	= 0.85
GCPi	= Ref Table 26.13-1 for Enclosed Building	= +/-0.18
LF	= Load Factor based upon ASD Design	= 0.60
qh	= (0.00256 * Kh * Kzt * Kd * Ke * V^2) * LF	= 33.94 psf
LHD	= Least Horizontal Dimension: Min(B, L)	= 34.000 ft
a1	= Min(0.1 * LHD, 0.4 * h)	= 3.400 ft
a	= Max(a1, 0.04 * LHD, 3 ft [0.9 m])	= 3.400 ft
h/B	= Ratio of mean roof height to least hor dim: h / B	= 0.366

Wind Pressures for C&C Ch 30 Pt 1
All wind pressures include a load factor of 0.6

Description	Zone	Width ft	Span ft	Area sq ft	1/3 Rule	Ref Fig	GCp Max	GCp Min	p Max psf	p Min psf
roof	1	2.000	36.000	432.00	Yes	30.3-2G	0.300	-0.800	16.29	-33.26
roof	2e	2.000	36.000	432.00	Yes	30.3-2G	0.300	-1.000	16.29	-40.05
roof	2r	2.000	36.000	432.00	Yes	30.3-2G	0.300	-1.000	16.29	-40.05
wlf	4	1.000	8.500	24.08	Yes	30.3-1	0.933	-1.033	37.76	-41.16
wlf	5	1.000	8.500	24.08	Yes	30.3-1	0.933	-1.265	37.76	-49.05

```
Area     = Span Length x Effective Width
1/3 Rule = Effective width need not be less than 1/3 of the span length
GCp      = External Pressure Coefficients taken from Figures 30.3-1 through 30.3-7
p        = Wind Pressure:  qh*(GCp - GCpi)  [Eqn 30.3-1]*
* Per Para 30.2.2 the Minimum Pressure for C&C is 9.60 psf [0.460 kPa] {Includes LF}
```

Components and Cladding (C&C) Overhang Calculations per Section 30.9:

h	= Mean Roof Height above grade	= 12.458 ft
Kh	= Z < 15 ft [4.572 m]--> (2.01 * (15/zg)^(2/Alpha) {Table 26.10-1}	= 0.849
Kzt	= Topographic Factor is 1 since no Topographic feature specified	= 1.000
Kd	= Wind Directionality Factor per Table 26.6-1	= 0.85
GCPi	= Ref Table 26.13-1 for Enclosed Building	= +/-0.18
LF	= Load Factor based upon ASD Design	= 0.60
qh	= (0.00256 * Kh * Kzt * Kd * Ke * V^2) * LF	= 33.94 psf

Wind Pressures for C&C per Section 30.9 & Figure 30.3-2
All wind pressures include a load factor of 0.6

Description	Zone	Width ft	Span Length ft	Area sq ft	1/3 Rule	Ref Fig	GCpi +/-	GCp Max	GCp Min	p Max psf	p Min psf
roof	2e_OHS	2.000	2.000	4.00	No	30.3-2G	0.18	0.000	-2.500	9.60	-90.96

```
#_OHS    = Zone # on Overhang w/ Sofit w/ Buildings Internal Pressure (GCPi = +/-0.18)
Area     = Span Length x Effective Width
1/3 Rule = Effective width need not be less than 1/3 of the span length
p        = Wind Pressure:  qh*(GCp - GCpi)*LF  [Eqn 30.3-1]*
* Per Para 30.2.2 the Minimum Pressure for C&C is 9.60 psf [0.460 kPa] {Includes LF}
Values of GCp for overhangs include contributions from both upper and lower surfaces.
```

MecaWind v2403

Software Developer: Meca Enterprises Inc., www.meca.biz, Copyright © 2020

Calculations Prepared by:
True
Address
City, State,
Date: Mar 13, 2022
Designer: 0

Calculations Prepared For:
Client: 0
Project #: 0
Location: 0

File Location : H:\0-ALFONSO\AMBER PRIVAL\OPEN.wnd

Basic Wind Parameters

Wind Load Standard	= ASCE 7-16	Exposure Category	= C
Wind Design Speed	= 175.0 mph	Risk Category	= II
Structure Type	= Building	Building Type	= Partially Enclosed

General Wind Settings

Incl_LF	= Include ASD Load Factor of 0.6 in Pressures	= True
DynType	= Dynamic Type of Structure	= Rigid
Zg	= Altitude (Ground Elevation) above Sea Level	= 0.000 ft
Bdist	= Base Elevation of Structure	= 0.000 ft
SDB	= Simple Diaphragm Building	= True
zi	= Level of highest opening in building or zero to use h	= 0.0 ft
MWFRSType	= MWFRS Method Selected	= Ch 27 Pt 1

Topographic Factor per Fig 26.8-1

Topo	= Topographic Feature	= None
Kzt	= Topographic Factor	= 1.000

Building Inputs

RoofType:	Building Roof Type	= Hipped	W : Width Perp to Ridge		= 34.000 ft
L	: Length Along Ridge	= 71.000 ft	EHt : Eave Height		= 8.500 ft
Hip	: Ridge Hipped Length	= 4.000 ft	RE : Roof Entry Method		= Slope
Slope	: Slope of Roof	= 5.0 :12	Theta : Roof Slope		= 22.62 Deg
Par	: Is there a Parapet	= False			
Aog	: Tot Area of Openings	= 0.00 sq ft	Vi : Unpart Int Volume		= 0.00 ft^3

Exposure Constants per Table 26.11-1:

Alpha:	Table 26.11-1 Const	= 9.500	Zg:	Table 26.11-1 Const	= 900.000 ft
At:	Table 26.11-1 Const	= 0.105	Bt:	Table 26.11-1 Const	= 1.000
Am:	Table 26.11-1 Const	= 0.154	Bm:	Table 26.11-1 Const	= 0.650
C:	Table 26.11-1 Const	= 0.200	Eps:	Table 26.11-1 Const	= 0.200

Overhang Inputs:

Std	= Overhangs on all sides are the same	= True
OHType	= Type of Roof Wall Intersections	= Sofit
OH	= Overhang of Roof Beyond Wall	= 2.000 ft

Main Wind Force Resisting System (MWFRS) Calculations per Ch 27 Part 1:

h	= Mean Roof Height above grade	= 12.458 ft
Kh	= Z < 15 ft [4.572 m]--> (2.01 * (15/zg)^(2/Alpha) {Table 26.10-1}	= 0.849
Kzt	= Topographic Factor is 1 since no Topographic feature specified	= 1.000
Kd	= Wind Directionality Factor per Table 26.6-1	= 0.85
Zg	= Elevation above Sea Level	= 0.000 ft
Ke	= Ground Elevation Factor: Ke = e^-(0.0000362*Zg) {Table 26.9-1}	= 1.000
Ri	= Reduction Factor for Partially Enclosed Large Volume Buildings	= 1.000
GCPi	= Ref Table 26.13-1 for Partially Enclosed Building: 0.55*Ri	= +/-0.55
RA	= Roof Area	= 2701.43 sq ft
LF	= Load Factor based upon ASD Design	= 0.60
qh	= (0.00256 * Kh * Kzt * Kd * Ke * V^2) * LF	= 33.94 psf
qin	= For Negative Internal Pressure of Partially Encl Bldg use qh*LF	= 33.94 psf
qip	= For Positive Internal Pressure no zi entered so use qh*LF	= 33.94 psf

Gust Factor Calculation:

Gust Factor Category I Rigid Structures - Simplified Method		
G1	= For Rigid Structures (Nat. Freq.>1 Hz) use 0.85	= 0.85
Gust Factor Category II Rigid Structures - Complete Analysis		
Zm	= Max(0.6 * Ht, Zmin)	= 15.000 ft
Izm	= Cc * (33 / Zm) ^ 0.167	= 0.228
Lzm	= L * (Zm / 33) ^ Eps	= 427.057
Q	= (1 / (1 + 0.63 * ((B + Ht) / Lzm)^0.63))^0.5	= 0.930
G2	= 0.925*((1+0.7*Izm*3.4*Q)/(1+0.7*3.4*Izm))	= 0.888
Gust Factor Used in Analysis		
G	= Lessor Of G1 Or G2	= 0.850

MWFRS Wind Normal to Ridge (Ref Fig 27.3-1)

h	= Mean Roof Height Of Building	= 12.458 ft
RHt	= Ridge Height Of Roof	= 16.417 ft
B	= Horizontal Dimension Of Building Normal To Wind Direction	= 71.000 ft
L	= Horizontal Dimension Of building Parallel To Wind Direction	= 34.000 ft
L/B	= Ratio Of L/B used For Cp determination	= 0.479
h/L	= Ratio Of h/L used For Cp determination	= 0.366
Slope	= Slope of Roof	= 22.62 Deg
OH_Top_+Y	= Overhang Top +Y (Leeward)	= -0.6, -0.6
OH_Top_-Y	= Overhang Top Windward Edge	= 0.18, -0.29
OH_X	= Overhang Top +/-X Coeff (0 to h/2) (0.000 ft to 2.000 ft)	= -0.18, -0.9
OH_X	= Overhang Top +/-X Coeff (0 to h/2) (2.000 ft to 6.229 ft)	= -0.18, -0.9
OH_X	= Overhang Top +/-X Coeff (h/2 to h) (6.229 ft to 12.458 ft)	= -0.18, -0.9
OH_X	= Overhang Top +/-X Coeff (h to 2h) (12.458 ft to 19.000 ft)	= -0.18, -0.5
OH_X	= Overhang Top +/-X Coeff (h to 2h) (19.000 ft to 24.917 ft)	= -0.18, -0.5
OH_X	= Overhang Top +/-X Coeff (>2h) (>24.917 ft)	= -0.18, -0.3
OH_X	= Overhang Top +/-X Coeff (>2h) (>36.000 ft)	= -0.18, -0.3
Roof_LW	= Roof (Leeward)	= -0.6, -0.6
Roof_WW	= Roof (Windward)	= 0.18, -0.29
Roof_X	= Roof +/-X Coeff (0 to h/2) (2.000 ft to 6.229 ft)	= -0.18, -0.9
Roof_X	= Roof +/-X Coeff (h/2 to h) (6.229 ft to 12.458 ft)	= -0.18, -0.9
Roof_X	= Roof +/-X Coeff (h to 2h) (12.458 ft to 24.917 ft)	= -0.18, -0.5
Roof_X	= Roof +/-X Coeff (>2h) (>24.917 ft)	= -0.18, -0.3
Sofit_-Y	= Overhang Sofit -Y	= 0.8, 0.8
Cp_WW	= Windward Wall Coefficient (All L/B Values)	= 0.80
Cp_LW	= Leward Wall Coefficient using L/B	= -0.50
Cp_SW	= Side Wall Coefficient (All L/B values)	= -0.70
GCpn_WW	= Parapet Combined Net Pressure Coefficient (Windward Parapet)	= 1.50
GCpn_LW	= Parapet Combined Net Pressure Coefficient (Leeward Parapet)	= -1.00

Wall Wind Pressures based On Positive Internal Pressure (+GCPi) - Normal to Ridge
All wind pressures include a load factor of 0.6

Elev ft	Kz	Kzt	qz psf	GCPi	Windward Press psf	Leeward Press psf	Side Press psf	Total Press psf	Minimum Pressure* psf
8.50	0.849	1.000	33.94	0.55	4.41	-33.09	-38.86	37.51	9.60

Wall Wind Pressures based on Negative Internal Pressure (-GCPi) - Normal to Ridge
All wind pressures include a load factor of 0.6

Elev ft	Kz	Kzt	qz psf	GCPi	Windward Press psf	Leeward Press psf	Side Press psf	Total Press psf	Minimum Pressure* psf
8.50	0.849	1.000	33.94	-0.55	41.75	4.24	-1.53	37.51	9.60

Notes Wall Pressures:

Kz	= Velocity Press Exp Coeff	Kzt	= Topographical Factor
qz	= 0.00256*Kz*Kzt*Kd*V^2	GCPi	= Internal Press Coefficient
Side	= qh * G * Cp_SW - qip * +GCPi	Windward	= qz * G * Cp_WW - qip * +GCPi
Leeward	= qh * G * Cp_LW - qip * +GCPi	Total	= Windward Press - Leeward Press

* Minimum Pressure: Para 27.1.5 no less than 9.60 psf (Incl LF) applied to Walls
\+ Pressures Acting TOWARD Surface - Pressures Acting AWAY from Surface

Roof Wind Pressures for Positive & Negative Internal Pressure (+/- GCPi) - Normal to Ridge
All wind pressures include a load factor of 0.6

Roof Var	Start Dist ft	End Dist ft	Cp_min	Cp_max	GCPi	Pressure Pn_min* psf	Pressure Pp_min* psf	Pressure Pn_max psf	Pressure Pp_max psf
OH_Top_+Y	N/A	N/A	-0.600	-0.600	0.550	1.36	-35.98	1.36	-35.98
OH_Top_+Y	N/A	N/A	-0.600	-0.600	0.550	1.36	-35.98	1.36	-35.98
OH_Top_-Y	N/A	N/A	0.180	-0.290	0.550	23.86	-13.47	10.30	-27.03
OH_Top_-Y	N/A	N/A	0.180	-0.290	0.550	23.86	-13.47	10.30	-27.03
OH_X (+X)	0.000	2.000	-0.180	-0.900	0.550	13.47	-23.86	-7.30	-44.63
OH_X (-X)	0.000	2.000	-0.180	-0.900	0.550	13.47	-23.86	-7.30	-44.63
OH_X (+X)	2.000	6.229	-0.180	-0.900	0.550	13.47	-23.86	-7.30	-44.63
OH_X (-X)	2.000	6.229	-0.180	-0.900	0.550	13.47	-23.86	-7.30	-44.63
OH_X (+X)	6.229	12.458	-0.180	-0.900	0.550	13.47	-23.86	-7.30	-44.63
OH_X (-X)	6.229	12.458	-0.180	-0.900	0.550	13.47	-23.86	-7.30	-44.63
OH_X (+X)	12.458	19.000	-0.180	-0.500	0.550	13.47	-23.86	4.24	-33.09
OH_X (-X)	12.458	19.000	-0.180	-0.500	0.550	13.47	-23.86	4.24	-33.09
OH_X (+X)	19.000	24.917	-0.180	-0.500	0.550	13.47	-23.86	4.24	-33.09
OH_X (-X)	19.000	24.917	-0.180	-0.500	0.550	13.47	-23.86	4.24	-33.09

OH_X (+X)	24.917	36.000	-0.180	-0.300	0.550	13.47	-23.86	10.01	-27.32
OH_X (-X)	24.917	36.000	-0.180	-0.300	0.550	13.47	-23.86	10.01	-27.32
OH_X (+X)	36.000	38.000	-0.180	-0.300	0.550	13.47	-23.86	10.01	-27.32
OH_X (-X)	36.000	38.000	-0.180	-0.300	0.550	13.47	-23.86	10.01	-27.32
Roof_LW	N/A	N/A	-0.600	-0.600	0.550	1.36	-35.98	1.36	-35.98
Roof_WW	N/A	N/A	0.180	-0.290	0.550	23.86	-13.47	10.30	-27.03
Roof_X (+X)	2.000	6.229	-0.180	-0.900	0.550	13.47	-23.86	-7.30	-44.63
Roof_X (-X)	2.000	6.229	-0.180	-0.900	0.550	13.47	-23.86	-7.30	-44.63
Roof_X (+X)	6.229	12.458	-0.180	-0.900	0.550	13.47	-23.86	-7.30	-44.63
Roof_X (-X)	6.229	12.458	-0.180	-0.900	0.550	13.47	-23.86	-7.30	-44.63
Roof_X (+X)	12.458	24.917	-0.180	-0.500	0.550	13.47	-23.86	4.24	-33.09
Roof_X (-X)	12.458	24.917	-0.180	-0.500	0.550	13.47	-23.86	4.24	-33.09
Roof_X (+X)	24.917	36.000	-0.180	-0.300	0.550	13.47	-23.86	10.01	-27.32
Roof_X (-X)	24.917	36.000	-0.180	-0.300	0.550	13.47	-23.86	10.01	-27.32
Sofit_-Y	N/A	N/A	0.800	0.800	0.550	41.75	4.41	41.75	4.41

Notes Roof Pressures:
Start Dist = Start Dist from Windward Edge End Dist = End Dist from Windward Edge
Cp_Max = Largest Coefficient Magnitude Cp_Min = Smallest Coefficient Magnitude
Pp_max = qh*G*Cp_max - qip*(+GCPi) Pn_max = qh*G*Cp_max - qin*(-GCPi)
Pp_min* = qh*G*Cp_min - qip*(+GCPi) Pn_min* = qh*G*Cp_min - qin*(-GCPi)
OH = Overhang X = Dir along Ridge Y = Dir Perpendcular to Ridge Z = Vertical
* The smaller uplift pressures due to Cp_Min can become critical when wind is combined with roof live load or snow load; load combinations are given in ASCE 7
+ Pressures Acting TOWARD Surface - Pressures Acting AWAY from Surface

MWFRS Wind Parallel to Ridge (Ref Fig 27.3-1)

h	= Mean Roof Height Of Building	= 12.458 ft
RHt	= Ridge Height Of Roof	= 16.417 ft
B	= Horizontal Dimension Of Building Normal To Wind Direction	= 34.000 ft
L	= Horizontal Dimension Of building Parallel To Wind Direction	= 71.000 ft
L/B	= Ratio Of L/B used For Cp determination	= 2.088
h/L	= Ratio Of h/L used For Cp determination	= 0.175
Slope	= Slope of Roof	= 22.62 Deg
Hip_End	= Hipped End Coeff (0 to h/2) (2.000 ft to 6.229 ft)	= -0.18, -0.9
Hip_End	= Hipped End Coeff (h/2 to h) (6.229 ft to 12.458 ft)	= -0.18, -0.9
Hip_End	= Hipped End Coeff (h to 2h) (12.458 ft to 24.917 ft)	= -0.18, -0.5
Hip_End	= Hipped End Coeff (>2h) (>24.917 ft)	= -0.18, -0.3
Hip_End	= Hipped End Coeff (>2h) (>39.500 ft)	= -0.18, -0.3
OH_Bot	= Sofit (Windward Face Only)	= 0.8, 0.8
OH_Top	= Overhang Top Coeff (0 to h/2) (0.000 ft to 2.000 ft)	= -0.18, -0.9
OH_Top	= Overhang Top Coeff (0 to h/2) (2.000 ft to 6.229 ft)	= -0.18, -0.9
OH_Top	= Overhang Top Coeff (h/2 to h) (6.229 ft to 12.458 ft)	= -0.18, -0.9
OH_Top	= Overhang Top Coeff (h to 2h) (12.458 ft to 24.917 ft)	= -0.18, -0.5
OH_Top	= Overhang Top Coeff (>2h) (>24.917 ft)	= -0.18, -0.3
OH_Top	= Overhang Top Coeff (>2h) (>37.500 ft)	= -0.18, -0.3
OH_Top	= Overhang Top Coeff (>2h) (>73.000 ft)	= -0.18, -0.3
Roof	= Roof Coeff (0 to h/2) (2.000 ft to 6.229 ft)	= -0.18, -0.9
Roof	= Roof Coeff (h/2 to h) (6.229 ft to 12.458 ft)	= -0.18, -0.9
Roof	= Roof Coeff (h to 2h) (12.458 ft to 24.917 ft)	= -0.18, -0.5
Roof	= Roof Coeff (>2h) (>24.917 ft)	= -0.18, -0.3
Cp_WW	= Windward Wall Coefficient (All L/B Values)	= 0.80
Cp_LW	= Leward Wall Coefficient using L/B	= -0.30
Cp_SW	= Side Wall Coefficient (All L/B values)	= -0.70
GCpn_WW	= Parapet Combined Net Pressure Coefficient (Windward Parapet)	= 1.50
GCpn_LW	= Parapet Combined Net Pressure Coefficient (Leeward Parapet)	= -1.00

Wall Wind Pressures based On Positive Internal Pressure (+GCPi) - Parallel to Ridge
All wind pressures include a load factor of 0.6

Elev ft	Kz	Kzt	qz psf	GCPi	Windward Press psf	Leeward Press psf	Side Press psf	Total Press psf	Minimum Pressure* psf
8.50	0.849	1.000	33.94	0.55	4.41	-27.20	-38.86	31.61	9.60

Wall Wind Pressures based on Negative Internal Pressure (-GCPi) - Parallel to Ridge
All wind pressures include a load factor of 0.6

Elev ft	Kz	Kzt	qz psf	GCPi	Windward Press psf	Leeward Press psf	Side Press psf	Total Press psf	Minimum Pressure* psf
8.50	0.849	1.000	33.94	-0.55	41.75	10.14	-1.53	31.61	9.60

Notes Wall Pressures:
Kz = Velocity Press Exp Coeff Kzt = Topographical Factor

```
qz       = 0.00256*Kz*Kzt*Kd*V^2              GCPi     = Internal Press Coefficient
Side     = qh * G * Cp_SW - qip * +GCPi       Windward = qz * G * Cp_WW - qip * +GCPi
Leeward  = qh * G * Cp_LW - qip * +GCPi       Total    = Windward Press - Leeward Press
* Minimum Pressure: Para 27.1.5 no less than 9.60 psf (Incl LF) applied to Walls
+ Pressures Acting TOWARD Surface             - Pressures Acting AWAY from Surface
```

Roof Wind Pressures for Positive & Negative Internal Pressure (+/- GCPi) - Parallel to Ridge
All wind pressures include a load factor of 0.6

Roof Var	Start Dist ft	End Dist ft	Cp_min	Cp_max	GCPi	Pressure Pn_min* psf	Pressure Pp_min* psf	Pressure Pn_max psf	Pressure Pp_max psf
Hip_End (-X)	2.000	6.229	-0.180	-0.900	0.550	13.47	-23.86	-7.30	-44.63
Hip_End (-X)	6.229	12.458	-0.180	-0.900	0.550	13.47	-23.86	-7.30	-44.63
Hip_End (-X)	12.458	24.917	-0.180	-0.500	0.550	13.47	-23.86	4.24	-33.09
Hip_End (-X)	24.917	35.500	-0.180	-0.300	0.550	13.47	-23.86	10.01	-27.32
Hip_End (+X)	39.500	73.000	-0.180	-0.300	0.550	13.47	-23.86	10.01	-27.32
OH_Bot	N/A	N/A	0.800	0.800	0.550	41.75	4.41	41.75	4.41
OH_Top (-X)	0.000	2.000	-0.180	-0.900	0.550	13.47	-23.86	-7.30	-44.63
OH_Top (-X)	0.000	2.000	-0.180	-0.900	0.550	13.47	-23.86	-7.30	-44.63
OH_Top (-X)	0.000	2.000	-0.180	-0.900	0.550	13.47	-23.86	-7.30	-44.63
OH_Top (-X)	0.000	2.000	-0.180	-0.900	0.550	13.47	-23.86	-7.30	-44.63
OH_Top (+Y)	0.000	2.000	-0.180	-0.900	0.550	13.47	-23.86	-7.30	-44.63
OH_Top (-Y)	0.000	2.000	-0.180	-0.900	0.550	13.47	-23.86	-7.30	-44.63
OH_Top (+Y)	2.000	6.229	-0.180	-0.900	0.550	13.47	-23.86	-7.30	-44.63
OH_Top (-Y)	2.000	6.229	-0.180	-0.900	0.550	13.47	-23.86	-7.30	-44.63
OH_Top (+Y)	6.229	12.458	-0.180	-0.900	0.550	13.47	-23.86	-7.30	-44.63
OH_Top (-Y)	6.229	12.458	-0.180	-0.900	0.550	13.47	-23.86	-7.30	-44.63
OH_Top (+Y)	12.458	24.917	-0.180	-0.500	0.550	13.47	-23.86	4.24	-33.09
OH_Top (-Y)	12.458	24.917	-0.180	-0.500	0.550	13.47	-23.86	4.24	-33.09
OH_Top (+Y)	24.917	37.500	-0.180	-0.300	0.550	13.47	-23.86	10.01	-27.32
OH_Top (-Y)	24.917	37.500	-0.180	-0.300	0.550	13.47	-23.86	10.01	-27.32
OH_Top (+Y)	37.500	73.000	-0.180	-0.300	0.550	13.47	-23.86	10.01	-27.32
OH_Top (-Y)	37.500	73.000	-0.180	-0.300	0.550	13.47	-23.86	10.01	-27.32
OH_Top (+X)	73.000	75.000	-0.180	-0.300	0.550	13.47	-23.86	10.01	-27.32
OH_Top (+X)	73.000	75.000	-0.180	-0.300	0.550	13.47	-23.86	10.01	-27.32
OH_Top (+X)	73.000	75.000	-0.180	-0.300	0.550	13.47	-23.86	10.01	-27.32
OH_Top (+X)	73.000	75.000	-0.180	-0.300	0.550	13.47	-23.86	10.01	-27.32
OH_Top (+Y)	73.000	75.000	-0.180	-0.300	0.550	13.47	-23.86	10.01	-27.32
OH_Top (-Y)	73.000	75.000	-0.180	-0.300	0.550	13.47	-23.86	10.01	-27.32
Roof (+Y)	2.000	6.229	-0.180	-0.900	0.550	13.47	-23.86	-7.30	-44.63
Roof (-Y)	2.000	6.229	-0.180	-0.900	0.550	13.47	-23.86	-7.30	-44.63
Roof (+Y)	6.229	12.458	-0.180	-0.900	0.550	13.47	-23.86	-7.30	-44.63
Roof (-Y)	6.229	12.458	-0.180	-0.900	0.550	13.47	-23.86	-7.30	-44.63
Roof (+Y)	12.458	24.917	-0.180	-0.500	0.550	13.47	-23.86	4.24	-33.09
Roof (-Y)	12.458	24.917	-0.180	-0.500	0.550	13.47	-23.86	4.24	-33.09
Roof (+Y)	24.917	73.000	-0.180	-0.300	0.550	13.47	-23.86	10.01	-27.32
Roof (-Y)	24.917	73.000	-0.180	-0.300	0.550	13.47	-23.86	10.01	-27.32

```
Notes Roof Pressures:
Start Dist = Start Dist from Windward Edge  End Dist = End Dist from Windward Edge
Cp_Max     = Largest Coefficient Magnitude  Cp_Min   = Smallest Coefficient Magnitude
Pp_max     = qh*G*Cp_max - qip*(+GCPi)      Pn_max   = qh*G*Cp_max - qin*(-GCpi)
Pp_min*    = qh*G*Cp_min - qip*(+GCPi)      Pn_min*  = qh*G*Cp_min - qin*(-GCPi)
OH = Overhang   X = Dir along Ridge   Y = Dir Perpendcular to Ridge  Z = Vertical
* The smaller uplift pressures due to Cp_Min can become critical when wind is combined
  with roof live load or snow load;  load combinations are given in ASCE 7
+ Pressures Acting TOWARD Surface            - Pressures Acting AWAY from Surface
```

Components and Cladding (C&C) Calculations per Ch 30 Part 1:

```
h/W      = Ratio of mean roof height to building width                          = 0.366
h/L      = Ratio of mean roof height to building length                         = 0.175
h        = Mean Roof Height above grade                                         = 12.458 ft
Kh       = Z < 15 ft [4.572 m]--> (2.01 * (15/zg)^(2/Alpha) (Table 26.10-1)     = 0.849
Kzt      = Topographic Factor is 1 since no Topographic feature specified       = 1.000
Kd       = Wind Directionality Factor per Table 26.6-1                          = 0.85
Ri       = Reduction Factor for Partially Enclosed Large Volume Buildings       = 1.000
GCPi     = Ref Table 26.13-1 for Partially Enclosed Building: 0.55*Ri           = +/-0.55
LF       = Load Factor based upon ASD Design                                    = 0.60
qh       = (0.00256 * Kh * Kzt * Kd * Ke * V^2) * LF                            = 33.94 psf
LHD      = Least Horizontal Dimension:  Min(B, L)                               = 34.000 ft
al       = Min(0.1 * LHD,  0.4 * h)                                             = 3.400 ft
a        = Max(al, 0.04 * LHD, 3 ft [0.9 m])                                    = 3.400 ft
h/B      = Ratio of mean roof height to least hor dim: h / B                    = 0.366
```

Wind Pressures for C&C Ch 30 Pt 1

All wind pressures include a load factor of 0.6

Description	Zone	Width ft	Span ft	Area sq ft	1/3 Rule	Ref Fig	GCp Max	GCp Min	p Max psf	p Min psf
roof	1	2.000	36.000	432.00	Yes	30.3-2G	0.300	-0.800	28.85	-45.82
roof	2e	2.000	36.000	432.00	Yes	30.3-2G	0.300	-1.000	28.85	-52.61
roof	2r	2.000	36.000	432.00	Yes	30.3-2G	0.300	-1.000	28.85	-52.61
wlf	4	1.000	8.500	24.08	Yes	30.3-1	0.933	-1.033	50.32	-53.72
wlf	5	1.000	8.500	24.08	Yes	30.3-1	0.933	-1.265	50.32	-61.61

Area = Span Length x Effective Width
1/3 Rule = Effective width need not be less than 1/3 of the span length
GCp = External Pressure Coefficients taken from Figures 30.3-1 through 30.3-7
p = Wind Pressure: qh*(GCp - GCpi) [Eqn 30.3-1]*
* Per Para 30.2.2 the Minimum Pressure for C&C is 9.60 psf [0.460 kPa] (Includes LF)

Components and Cladding (C&C) Overhang Calculations per Section 30.9:

h	= Mean Roof Height above grade	= 12.458 ft
Kh	= Z < 15 ft [4.572 m]--> (2.01 * (15/zg)^(2/Alpha) (Table 26.10-1)	= 0.849
Kzt	= Topographic Factor is 1 since no Topographic feature specified	= 1.000
Kd	= Wind Directionality Factor per Table 26.6-1	= 0.85
Ri	= Reduction Factor for Partially Enclosed Large Volume Buildings	= 1.000
GCPi	= Ref Table 26.13-1 for Partially Enclosed Building: 0.55*Ri	= +/-0.55
LF	= Load Factor based upon ASD Design	= 0.60
qh	= (0.00256 * Kh * Kzt * Kd * Ke * V^2) * LF	= 33.94 psf

Wind Pressures for C&C per Section 30.9 & Figure 30.3-2
All wind pressures include a load factor of 0.6

Description	Zone	Width ft	Span Length ft	Area sq ft	1/3 Rule	Ref Fig	GCpi +/-	GCp Max	GCp Min	p Max psf	p Min psf
roof	2e_OHS	2.000	2.000	4.00	No	30.3-2G	0.55	0.000	-2.500	9.60	-103.52

#_OHS = Zone # on Overhang w/ Sofit w/ Buildings Internal Pressure (GCPi = +/-0.55)
Area = Span Length x Effective Width
1/3 Rule = Effective width need not be less than 1/3 of the span length
p = Wind Pressure: qh*(GCp - GCpi)*LF [Eqn 30.3-1]*
* Per Para 30.2.2 the Minimum Pressure for C&C is 9.60 psf [0.460 kPa] (Includes LF)
Values of GCp for overhangs include contributions from both upper and lower surfaces.

GENERAL NOTES:

CONCRETE SHALL HAVE 3 000 PSI COMPRESSIVE STRENGTH AT 28 DAYS UNLESS OTHERWISE NOTED (U O N)
ALL REINFORCING STEEL SHALL BE DEFORMED BARS AND SHALL HAVE A MINIMUM YIELD STRENGTH OF 60 000 PSI GRADE 60 AND MEET ASTM A-615 SPECS
ALL STRUCTURAL STEEL SHALL HAVE A MINIMUM YIELD STRENGTH OF 36 000 PSI AND MEET ASTM A-36 SPECS
DROP TIE BEAM OVER DOORS EXTEND 8" PAST OPENING ON BOTH SIDES AND ADD 2 #5 BARS FOR EVERY ADDITIONAL 8" OF BEAM HEIGHT (2 ADDITIONAL BARS MIN)

FOUNDATIONS

SOIL STATEMENT:

THE SOIL AT THIS SITE HAS BEEN OBSERVED BY THE ARCHITECT OR ENGINEER TO BE COMPOSED OF SAND AND ROCKS AND CAN BE CONSIDERED TO HAVE AN ALLOWABLE MINIMUM DESIGN BEARING CAPACITY OF 2 000 P S F (SHOULD ANY OTHER CONDITIONS OR MATERIALS BE ENCOUNTERED IN THE PROCESS OF CONSTRUCTION THE ARCHITECT OR ENGINEER SHALL BE NOTIFIED BEFORE PROCEEDING WITH THE WORK)
ALL BUILDINGS SHALL HAVE PRE-CONSTRUCTION TREATMENT PROTECTION AGAINST SUBTERRANEAN TERMITES AS PER F B C 2020 7th EDITION A CERTIFICATE OF COMPLIANCE SHALL BE ISSUED TO THE BUILDING DEPARTMENT BY THE LICENSED PEST CONTROL COMPANY THAT CONTAINS THE FOLLOWING STATEMENTS " THE BUILDING HAS RECEIVED A COMPLETE TREATMENT FOR THE PREVENTION OF SUBTERRANEAN TERMITES TREATMENT IS IN ACCORDANCE WITH THE RULES AND LAWS ESTABLISHED BY THE FLORIDA DEPARTMENT OF AGRICULTURE AND CONSUMER SERVICES "
AT THE TIME OF CONSTRUCTION THE ARCHITECT OR ENGINEER SHALL SUBMIT TO THE BUILDING OFFICIAL A LETTER ATTESTING THAT THE SITE HAS BEEN OBSERVED AND THAT THE FOUNDATION CONDITIONS ARE SIMILAR TO THOSE UPON WHICH THE DESIGN IS BASED
SOIL AT THE BUILDING AREA SHALL BE VIBRE-ROLLED TO A MIN COMP ACTION OF 2 000 P S F AND MODIFIED PROCTOR DENSITY
CENTERLINE OF FOOTING IS CENTERLINE OF COLUMNS AND BEARING WALLS, UNLESS OTHER WISE NOTED (U O N)
ELEVATION OF TOP OF FOOTING SHALL BE 1'- 0" BELOW THE FINISHED GRADE, U O N
PROVIDE BEND DOWELS AT ALL COLUMNS AND VERTICAL REINFORCEMENT SAME SIZE AND QUANTITY AS REINFORCEMENT

REINFORCING

MINIMUM CLEAR COVER FOR REBARS TO BE AS FOLLOWS
COLUMNS = 1-1/2" TO TIE FOOTINGS = 3" BEAMS = 1-1/2" TO TIE
PEDESTAL - 2" TO TIE SLAB ON FILL = 2" FROM TOP SLABS = 3/4"
ALL REINFORCING SHALL BE HELD SECURELY IN POSITION WITH STANDARD ACCESSORIES
SPLICES IN CONTINUOS TOP REBARS SHALL BE MADE AT MID SPAN, SPLICES IN CONTINUOS BOTTOM REBARS SHALL BE OVER SUPPORT(S)
SPLICES IN REINFORCING WHERE PERMITTED SHALL BE AS FOLLOWS
COLUMN VERT BARS = 30 BAR DIA TEMPERATURE REBARS = 12" MIN
FOOTING DOWELS = 30 BAR DIA = 8" WELDED WIRE MESH = 6"
TENSION SPLICE = CLASS "C" ALL OTHERS = 30 BAR DIA
PROVIDE 2 #5'S 60° LONG BEND BARS AT CORNERS OF BEAMS.

SLAB

4" FIBER STEALTH CONCRETE SLAB 3000 PSI
~~SLAB SHALL BE 2500 PSI CONCRETE (MIN) 4" THICK REINFORCED WITH~~
~~6"X 6"- 10/10 (GAUGE) WELDED WIRE MESH (W W M) ON WELL COMPACTED FILL~~
FILL MATERIAL SHALL BE CLEAN SAND AND ROCK COMPACTED TO 95% OF MAXIMUM DENSITY IN LIFTS NOT TO EXCEED 12" IN DEPTH
PLACE CONCRETE SLABS IN A CHECKERBOARD PATTERN, NO PANEL EXCEEDING 25 FEET OF LENGTH, OR 625 SF IN AREA, OR USE CONTROL JOINTS
ELEVATION TOP OF CONCRETE SLAB SHOWN THUSLY OR MATCH EXISTING ADJACENT FLOOR ELEVATION
WALLS, COLUMNS AND BEAMS, PENETRATING SLAB ON FILL SHALL BE ISOLATED BY 1/2" PRE MOLDED JOINT FILLER, UNLESS OTHERWISE NOTED (U O N)
SLABS SHALL BE PLACED OVER 1 LAYER OF PLASTIC MEMBRANE, SUCH AS 6 MIL VISQUEEN, OR SIMILAR
SLABS ON FILL SHALL BE CURED CONTINUOUSLY FOR 5 DAYS

MASONRY

CONCRETE MASONRY UNITS (CMU), OR "BLOCKS", SHALL CONFORM TO ASTM C-90 SPECS
COMPRESSIVE STRENGTH OF MASONRY UNITS SHALL BE NOT LESS THAN F'M=1500 PSI
ALL BLOCK WALLS SHALL BE LAID IN A FULL BEDDING OF MORTAR, WITH A COMPLETE COVERAGE OF THE BLOCK'S FACE SHELL (HORIZONTALLY) AND MORTAR GROOVES (VERTICALLY) AND REINFORCED WITH #9 TRUSS TYPE JOINT REINFORCEMENT @ EVERY OTHER COURSE (16"O C VERTICALLY)
MORTAR TO BOND BLOCK MASONRY SHALL BE TYPE "M", 2 500 PSI
THE FIRST BLOCK CELL ADJACENT TO ANY OPENING SHALL BE FILLED WITH CONCRETE
THE FIRST BLOCK CELL ADJACENT TO ANY OPENING FROM 3'TO 8'SHALL BE REINFORCED WITH 1- #5 VERTICAL AND BE FILLED WITH 2500 PSI CONCRETE

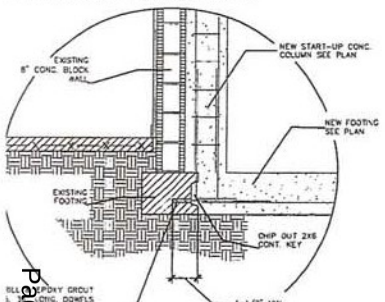

CONN. OF NEW FTG. TO EXIST'G
SCALE : 3/4" = 1'-0"

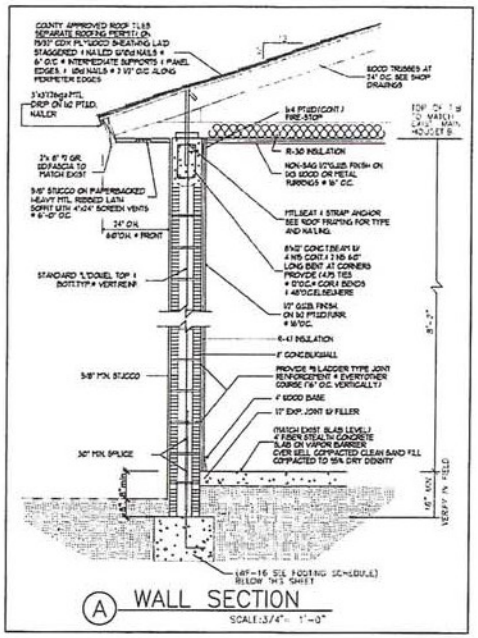

A WALL SECTION
SCALE: 3/4" = 1'-0"

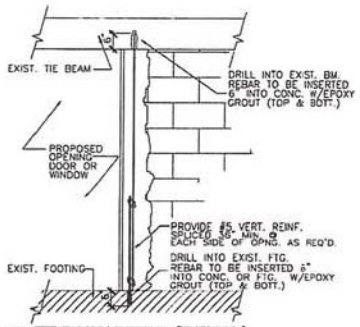

B TIE DOWN DETAIL (TYPICAL) AT EXISTING WALL
SCALE: 3/4" = 1'-0"

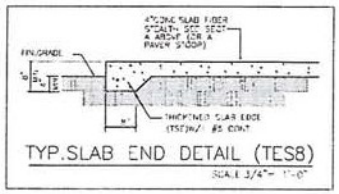

TYP.SLAB END DETAIL (TES8)
SCALE 3/4"= 1'-0"

FOOTING/COLUMN SCHEDULE

MARK	SIZE	TYP.	MIN. REINF.	REINFORCING			
				1	2	3	REMARKS
MF-16	16"	16"	140'-8"	2 #5 CONT.			
C1	8"x 16"	CONCRETE COLUMNS WITH 4 #5 VERT. & #3 TIES @ 8" O.C.					
C2	8"x 8"	CONCRETE COLUMNS WITH 4 #5 VERT. & #3 TIES @ 8" O.C.					
C3	8"x 12"	CONCRETE COLUMNS WITH 4 #5 VERT. & #3 TIES @ 8" O.C.					
MF-4	48"x48"	24"	16"	5 #5	5#5	5#5	5#5
MF-5	60"x60"	24"	12"	7 #5	7#5	7#5	7#5

STEEL INFORMATION N.T.S.

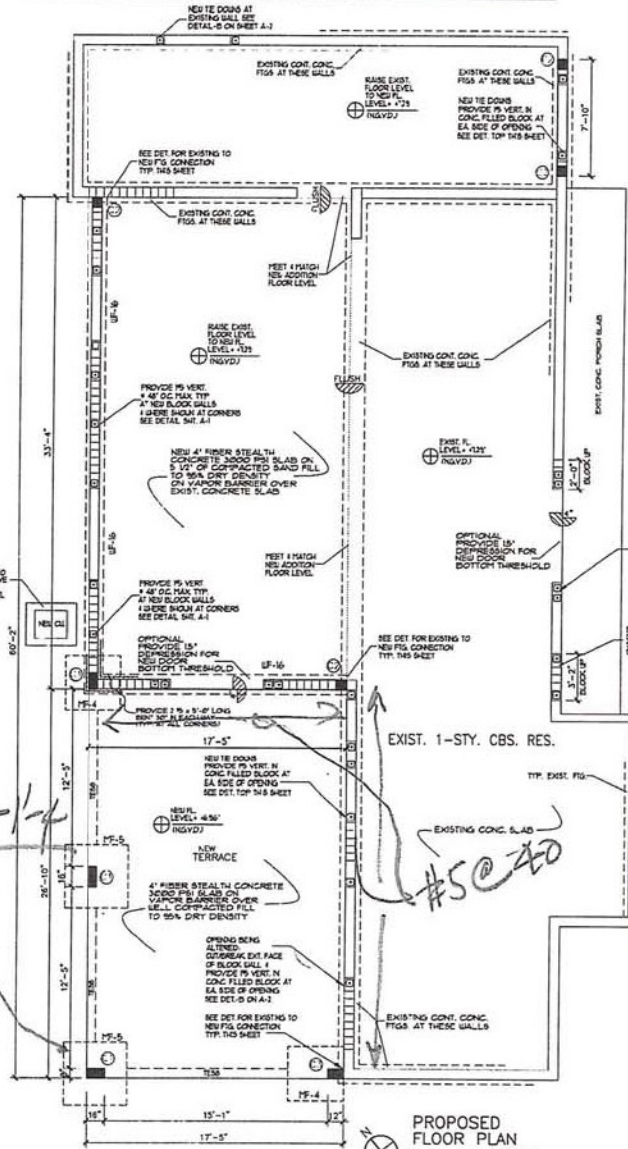

PROPOSED FLOOR PLAN
SCALE: 3/4"=1'-0"

NO.	DATE
1	*
2	*
3	*
4	*
5	*
6	*

PROJECT NAME: ADDITION TO RESIDENCE FOR:
OWNER/PH#: AMBAR PREVAL 786-587-7391
ADDRESS: 200 N. ESPLANADE DRIVE MIAMI SPRINGS, FLORIDA 33166
PROJECT ADD: SAME

Guillermo Ramon Gonzalez
9000 SW. 168th Avenue Miami Florida 33196 Ph:305-484-8171 Ph:786-234-2154 (assistant)
Registered Architect #13960

Guillermo Ramon Gonzalez
R.A. 13960
STATE OF FLORIDA

103321

A-2

JOSE GUZMAN P.E.
16581 SW 64 terrace
MIAMI, FLORIDA
786-338-1082
JGUZMANALBA@AOL.COM

JOB _____

SHEET NO. _____ OF _____

CALCULATED BY _____ DATE _____

CHECKED BY _____ DATE _____

SCALE _____

Footing wind load = 50 psf

Area = $\left(\frac{17.42}{2}+2\right)(12.42+1.33) = 147.3$ SF

$147.3 \times 50 = 7363$ #

CONC BEAM $\frac{8\times12}{144} \times 150 \times (12.42+1.33) = 1373$ #

COL. $\frac{8\times16}{144} \cdot 8.83 \times 150 = 1177$ #

ROOF $10 \text{ psf} \times 147.3 \text{ SF} = 1473$ #

Footing $5\times5\times1.5\times150 = 5625$ #

EARTH/SLAB $5\times5\times0.67\times110 = 1843$

10431

$10431 \times 0.6 = 6258 < 7363$

U.G.

Footing – 1'-4"

$5\times5\times1.33\times110 = 3658$

5625
1373
1177
1473
3658

$13305.5 \times 0.6 = 7983$ OK

MecaWind v240

Software Developer: Meca Enterprises Inc., www.meca.biz, Copyright © 2020

Calculations Prepared by:
Client: 0
Date: May 04, 2022
Designer: 0

Calculations Prepared For:
Project #: 0
Location: 0

File Location : I:\0-ALFONSO\AMBER PRIVAL\CLOSED.wnd

Basic Wind Parameters

Wind Load Standard	= ASCE 7-16	Exposure Category	= C
Wind Design Speed	= 175.0 mph	Risk Category	= II
Structure Type	= Building	Building Type	= Enclosed

General Wind Settings

Incl_LF	= Include ASD Load Factor of 0.6 in Pressures	= True
DynType	= Dynamic Type of Structure	= Rigid
Zg	= Altitude (Ground Elevation) above Sea Level	= 0.000 ft
Bdist	= Base Elevation of Structure	= 0.000 ft
SDB	= Simple Diaphragm Building	= True
MWFRSType	= MWFRS Method Selected	= Ch 27 Pt 1

Topographic Factor per Fig 26.8-1

Topo	= Topographic Feature	= None
Kzt	= Topographic Factor	= 1.000

Building Inputs

RoofType:	Building Roof Type	= Hipped	W :	Width Perp to Ridge	= 34.000 ft
L :	Length Along Ridge	= 71.000 ft	EHt :	Eave Height	= 8.500 ft
Hip :	Ridge Hipped Length	= 4.000 ft	RE :	Roof Entry Method	= Slope
Slope :	Slope of Roof	= 5.0 :12	Theta :	Roof Slope	= 22.62 Deg
Par :	Is there a Parapet	= False			

Exposure Constants per Table 26.11-1:

Alpha:	Table 26.11-1 Const	= 9.500	Zg:	Table 26.11-1 Const	= 900.000 ft
At:	Table 26.11-1 Const	= 0.105	Bt:	Table 26.11-1 Const	= 1.000
Am:	Table 26.11-1 Const	= 0.154	Bm:	Table 26.11-1 Const	= 0.650
C:	Table 26.11-1 Const	= 0.200	Eps:	Table 26.11-1 Const	= 0.200

Overhang Inputs:

Std	= Overhangs on all sides are the same	= True
OHType	= Type of Roof Wall Intersections	= Sofit
OH	= Overhang of Roof Beyond Wall	= 2.000 ft

Main Wind Force Resisting System (MWFRS) Calculations per Ch 27 Part 1:

h	= Mean Roof Height above grade	= 12.458 ft
Kh	= Z < 15 ft [4.572 m]--> (2.01 * (15/zg)^(2/Alpha) {Table 26.10-1}	= 0.849
Kzt	= Topographic Factor is 1 since no Topographic feature specified	= 1.000
Kd	= Wind Directionality Factor per Table 26.6-1	= 0.85
Zg	= Elevation above Sea Level	= 0.000 ft
Ke	= Ground Elevation Factor: Ke = e^-(0.0000362*Zg) {Table 26.9-1}	= 1.000
GCPi	= Ref Table 26.13-1 for Enclosed Building	= +/-0.18
RA	= Roof Area	= 2701.43 sq ft
LF	= Load Factor based upon ASD Design	= 0.60
qh	= (0.00256 * Kh * Kzt * Kd * Ke * V^2) * LF	= 33.94 psf
qin	= For Negative Internal Pressure of Enclosed Building use qh*LF	= 33.94 psf
qip	= For Positive Internal Pressure of Enclosed Building use qh*LF	= 33.94 psf

Gust Factor Calculation:

Gust Factor Category I Rigid Structures - Simplified Method

G1	= For Rigid Structures (Nat. Freq.>1 Hz) use 0.85	= 0.85

Gust Factor Category II Rigid Structures - Complete Analysis

Zm	= Max(0.6 * Ht, Zmin)	= 15.000 ft
Izm	= Cc * (33 / Zm) ^ 0.167	= 0.228
Lzm	= L * (Zm / 33) ^ Eps	= 427.057
B	= Structure Width Normal to Wind	= 71.000 ft
Q	= (1 / (1 + 0.63 * ((B + Ht) / Lzm)^0.63))^0.5	= 0.903
G2	= 0.925*((1+0.7*Izm*3.4*Q)/(1+0.7*3.4*Izm))	= 0.874

Gust Factor Used in Analysis

G	= Lessor Of G1 Or G2	= 0.850

MWFRS Wind Normal to Ridge (Ref Fig 27.3-1)

h	= Mean Roof Height Of Building	= 12.458 ft
RHt	= Ridge Height Of Roof	= 16.417 ft
B	= Horizontal Dimension Of Building Normal To Wind Direction	= 71.000 ft
L	= Horizontal Dimension Of building Parallel To Wind Direction	= 34.000 ft
L/B	= Ratio Of L/B used For Cp determination	= 0.479
h/L	= Ratio Of h/L used For Cp determination	= 0.366
Slope	= Slope of Roof	= 22.62 Deg
OH_Top_+Y	= Overhang Top +Y (Leeward)	= -0.6, -0.6
OH_Top_-Y	= Overhang Top Windward Edge	= 0.18, -0.29
OH_X	= Overhang Top +/-X Coeff (0 to h/2) (0.000 ft to 2.000 ft)	= -0.18, -0.9
OH_X	= Overhang Top +/-X Coeff (0 to h/2) (2.000 ft to 6.229 ft)	= -0.18, -0.9
OH_X	= Overhang Top +/-X Coeff (h/2 to h) (6.229 ft to 12.458 ft)	= -0.18, -0.9
OH_X	= Overhang Top +/-X Coeff (h to 2h) (12.458 ft to 19.000 ft)	= -0.18, -0.5
OH_X	= Overhang Top +/-X Coeff (h to 2h) (19.000 ft to 24.917 ft)	= -0.18, -0.5
OH_X	= Overhang Top +/-X Coeff (>2h) (>24.917 ft)	= -0.18, -0.3
OH_X	= Overhang Top +/-X Coeff (>2h) (>36.000 ft)	= -0.18, -0.3
Roof_LW	= Roof (Leeward)	= -0.6, -0.6
Roof_WW	= Roof (Windward)	= 0.18, -0.29
Roof_X	= Roof +/-X Coeff (0 to h/2) (2.000 ft to 6.229 ft)	= -0.18, -0.9
Roof_X	= Roof +/-X Coeff (h/2 to h) (6.229 ft to 12.458 ft)	= -0.18, -0.9
Roof_X	= Roof +/-X Coeff (h to 2h) (12.458 ft to 24.917 ft)	= -0.18, -0.5
Roof_X	= Roof +/-X Coeff (>2h) (>24.917 ft)	= -0.18, -0.3
Sofit_-Y	= Overhang Sofit -Y	= 0.8, 0.8

Cp_WW	= Windward Wall Coefficient (All L/B Values)	= 0.80
Cp_LW	= Leward Wall Coefficient using L/B	= -0.50
Cp_SW	= Side Wall Coefficient (All L/B values)	= -0.70
GCpn_WW	= Parapet Combined Net Pressure Coefficient (Windward Parapet)	= 1.50
GCpn_LW	= Parapet Combined Net Pressure Coefficient (Leeward Parapet)	= -1.00

Wall Wind Pressures based On Positive Internal Pressure (+GCPi) - Normal to Ridge
All wind pressures include a load factor of 0.6

Elev	Kz	Kzt	qz	GCPi	Windward Press	Leeward Press	Side Press	Total Press	Minimum Pressure*
ft			psf		psf	psf	psf	psf	psf
8.50	0.849	1.000	33.94	0.18	16.97	-20.53	-26.30	37.51	9.60

Wall Wind Pressures based on Negative Internal Pressure (-GCPi) - Normal to Ridge
All wind pressures include a load factor of 0.6

Elev	Kz	Kzt	qz	GCPi	Windward Press	Leeward Press	Side Press	Total Press	Minimum Pressure*
ft			psf		psf	psf	psf	psf	psf
8.50	0.849	1.000	33.94	-0.18	29.19	-8.32	-14.09	37.51	9.60

Notes Wall Pressures:
Kz = Velocity Press Exp Coeff
Kzt = Topographical Factor
qz = 0.00256*Kz*Kzt*Kd*V^2
GCPi = Internal Press Coefficient
Side = qh * G * Cp_SW - qip * +GCPi
Windward = qz * G * Cp_WW - qip * +GCPi
Leeward = qh * G * Cp_LW - qip * +GCPi
Total = Windward Press - Leeward Press
* Minimum Pressure: Para 27.1.5 no less than 9.60 psf (Incl LF) applied to Walls
+ Pressures Acting TOWARD Surface
- Pressures Acting AWAY from Surface

Roof Wind Pressures for Positive & Negative Internal Pressure (+/- GCPi) - Normal to Ridge
All wind pressures include a load factor of 0.6

Roof Var	Start Dist ft	End Dist ft	Cp_min	Cp_max	GCPi	Pressure Pn_min* psf	Pressure Pp_min* psf	Pressure Pn_max psf	Pressure Pp_max psf
OH_Top_+Y	N/A	N/A	-0.600	-0.600	0.180	-11.20	-23.42	-11.20	-23.42
OH_Top_+Y	N/A	N/A	-0.600	-0.600	0.180	-11.20	-23.42	-11.20	-23.42
OH_Top_-Y	N/A	N/A	0.180	-0.290	0.180	11.30	-0.92	-2.26	-14.48

OH_Top_-Y	N/A	N/A	0.180	-0.290	0.180	11.30	-0.92	-2.26	-14.48
OH_X (+X)	0.000	2.000	-0.180	-0.900	0.180	0.92	-11.30	-19.86	-32.07
OH_X (-X)	0.000	2.000	-0.180	-0.900	0.180	0.92	-11.30	-19.86	-32.07
OH_X (+X)	2.000	6.229	-0.180	-0.900	0.180	0.92	-11.30	-19.86	-32.07
OH_X (-X)	2.000	6.229	-0.180	-0.900	0.180	0.92	-11.30	-19.86	-32.07
OH_X (+X)	6.229	12.458	-0.180	-0.900	0.180	0.92	-11.30	-19.86	-32.07
OH_X (-X)	6.229	12.458	-0.180	-0.900	0.180	0.92	-11.30	-19.86	-32.07
OH_X (+X)	12.458	19.000	-0.180	-0.500	0.180	0.92	-11.30	-8.32	-20.53
OH_X (-X)	12.458	19.000	-0.180	-0.500	0.180	0.92	-11.30	-8.32	-20.53
OH_X (+X)	19.000	24.917	-0.180	-0.500	0.180	0.92	-11.30	-8.32	-20.53
OH_X (-X)	19.000	24.917	-0.180	-0.500	0.180	0.92	-11.30	-8.32	-20.53
OH_X (+X)	24.917	36.000	-0.180	-0.300	0.180	0.92	-11.30	-2.55	-14.76
OH_X (-X)	24.917	36.000	-0.180	-0.300	0.180	0.92	-11.30	-2.55	-14.76
OH_X (+X)	36.000	38.000	-0.180	-0.300	0.180	0.92	-11.30	-2.55	-14.76
OH_X (-X)	36.000	38.000	-0.180	-0.300	0.180	0.92	-11.30	-2.55	-14.76
Roof_LW	N/A	N/A	-0.600	-0.600	0.180	-11.20	-23.42	-11.20	-23.42
Roof_WW	N/A	N/A	0.180	-0.290	0.180	11.30	-0.92	-2.26	-14.48
Roof_X (+X)	2.000	6.229	-0.180	-0.900	0.180	0.92	-11.30	-19.86	-32.07
Roof_X (-X)	2.000	6.229	-0.180	-0.900	0.180	0.92	-11.30	-19.86	-32.07
Roof_X (+X)	6.229	12.458	-0.180	-0.900	0.180	0.92	-11.30	-19.86	-32.07
Roof_X (-X)	6.229	12.458	-0.180	-0.900	0.180	0.92	-11.30	-19.86	-32.07
Roof_X (+X)	12.458	24.917	-0.180	-0.500	0.180	0.92	-11.30	-8.32	-20.53
Roof_X (-X)	12.458	24.917	-0.180	-0.500	0.180	0.92	-11.30	-8.32	-20.53
Roof_X (+X)	24.917	36.000	-0.180	-0.300	0.180	0.92	-11.30	-2.55	-14.76
Roof_X (-X)	24.917	36.000	-0.180	-0.300	0.180	0.92	-11.30	-2.55	-14.76
Sofit_-Y	N/A	N/A	0.800	0.800	0.180	29.19	16.97	29.19	16.97

Notes Roof Pressures:
Start Dist = Start Dist from Windward Edge End Dist = End Dist from Windward Edge
Cp_Max = Largest Coefficient Magnitude Cp_Min = Smallest Coefficient Magnitude
Pp_max = qh*G*Cp_max - qip*(+GCPi) Pn_max = qh*G*Cp_max - qin*(-GCpi)
Pp_min* = qh*G*Cp_min - qip*(+GCPi) Pn_min* = qh*G*Cp_min - qin*(-GCPi)
OH = Overhang X = Dir along Ridge Y = Dir Perpendcular to Ridge Z = Vertical
* The smaller uplift pressures due to Cp_Min can become critical when wind is combined with roof live load or snow load; load combinations are given in ASCE 7
+ Pressures Acting TOWARD Surface - Pressures Acting AWAY from Surface

MWFRS Wind Parallel to Ridge (Ref Fig 27.3-1)

h	= Mean Roof Height Of Building	= 12.458 ft
RHt	= Ridge Height Of Roof	= 16.417 ft
B	= Horizontal Dimension Of Building Normal To Wind Direction	= 34.000 ft
L	= Horizontal Dimension Of building Parallel To Wind Direction	= 71.000 ft
L/B	= Ratio Of L/B used For Cp determination	= 2.088
h/L	= Ratio Of h/L used For Cp determination	= 0.175
Slope	= Slope of Roof	= 22.62 Deg
Hip_End	= Hipped End Coeff (0 to h/2) (2.000 ft to 6.229 ft)	= -0.18, -0.9
Hip_End	= Hipped End Coeff (h/2 to h) (6.229 ft to 12.458 ft)	= -0.18, -0.9
Hip_End	= Hipped End Coeff (h to 2h) (12.458 ft to 24.917 ft)	= -0.18, -0.5
Hip_End	= Hipped End Coeff (>2h) (>24.917 ft)	= -0.18, -0.3
Hip_End	= Hipped End Coeff (>2h) (>39.500 ft)	= -0.18, -0.3
OH_Bot	= Sofit (Windward Face Only)	= 0.8, 0.8
OH_Top	= Overhang Top Coeff (0 to h/2) (0.000 ft to 2.000 ft)	= -0.18, -0.9
OH_Top	= Overhang Top Coeff (0 to h/2) (2.000 ft to 6.229 ft)	= -0.18, -0.9
OH_Top	= Overhang Top Coeff (h/2 to h) (6.229 ft to 12.458 ft)	= -0.18, -0.9
OH_Top	= Overhang Top Coeff (h to 2h) (12.458 ft to 24.917 ft)	= -0.18, -0.5
OH_Top	= Overhang Top Coeff (>2h) (>24.917 ft)	= -0.18, -0.3
OH_Top	= Overhang Top Coeff (>2h) (>37.500 ft)	= -0.18, -0.3
OH_Top	= Overhang Top Coeff (>2h) (>73.000 ft)	= -0.18, -0.3
Roof	= Roof Coeff (0 to h/2) (2.000 ft to 6.229 ft)	= -0.18, -0.9
Roof	= Roof Coeff (h/2 to h) (6.229 ft to 12.458 ft)	= -0.18, -0.9
Roof	= Roof Coeff (h to 2h) (12.458 ft to 24.917 ft)	= -0.18, -0.5
Roof	= Roof Coeff (>2h) (>24.917 ft)	= -0.18, -0.3
Cp_WW	= Windward Wall Coefficient (All L/B Values)	= 0.80
Cp_LW	= Leward Wall Coefficient using L/B	= -0.30
Cp_SW	= Side Wall Coefficient (All L/B values)	= -0.70
GCpn_WW	= Parapet Combined Net Pressure Coefficient (Windward Parapet)	= 1.50
GCpn_LW	= Parapet Combined Net Pressure Coefficient (Leeward Parapet)	= -1.00

Wall Wind Pressures based On Positive Internal Pressure (+GCPi) - Parallel to Ridge
All wind pressures include a load factor of 0.6

Elev ft	Kz	Kzt	qz psf	GCPi	Windward Press psf	Leeward Press psf	Side Press psf	Total Press psf	Minimum Pressure* psf
8.50	0.849	1.000	33.94	0.18	16.97	-14.64	-26.30	31.61	9.60

Wall Wind Pressures based on Negative Internal Pressure (-GCPi) - Parallel to Ridge
All wind pressures include a load factor of 0.6

Elev ft	Kz	Kzt	qz psf	GCPi	Windward Press psf	Leeward Press psf	Side Press psf	Total Press psf	Minimum Pressure* psf
8.50	0.849	1.000	33.94	-0.18	29.19	-2.42	-14.09	31.61	9.60

Notes Wall Pressures:
Kz = Velocity Press Exp Coeff
qz = 0.00256*Kz*Kzt*Kd*V^2
Side = qh * G * Cp_SW - qip * +GCPi
Leeward = qh * G * Cp_LW - qip * +GCPi
Kzt = Topographical Factor
GCPi = Internal Press Coefficient
Windward = qz * G * Cp_WW - qip * +GCPi
Total = Windward Press - Leeward Press
* Minimum Pressure: Para 27.1.5 no less than 9.60 psf (Incl LF) applied to Walls
+ Pressures Acting TOWARD Surface
- Pressures Acting AWAY from Surface

Roof Wind Pressures for Positive & Negative Internal Pressure (+/- GCPi) - Parallel to Ridge
All wind pressures include a load factor of 0.6

Roof Var	Start Dist ft	End Dist ft	Cp_min	Cp_max	GCPi	Pressure Pn_min* psf	Pressure Pp_min* psf	Pressure Pn_max psf	Pressure Pp_max psf
Hip_End (-X)	2.000	6.229	-0.180	-0.900	0.180	0.92	-11.30	-19.86	-32.07
Hip_End (-X)	6.229	12.458	-0.180	-0.900	0.180	0.92	-11.30	-19.86	-32.07
Hip_End (-X)	12.458	24.917	-0.180	-0.500	0.180	0.92	-11.30	-8.32	-20.53
Hip_End (-X)	24.917	35.500	-0.180	-0.300	0.180	0.92	-11.30	-2.55	-14.76
Hip_End (+X)	39.500	73.000	-0.180	-0.300	0.180	0.92	-11.30	-2.55	-14.76
OH_Bot	N/A	N/A	0.800	0.800	0.180	29.19	16.97	29.19	16.97
OH_Top (-X)	0.000	2.000	-0.180	-0.900	0.180	0.92	-11.30	-19.86	-32.07
OH_Top (-X)	0.000	2.000	-0.180	-0.900	0.180	0.92	-11.30	-19.86	-32.07
OH_Top (-X)	0.000	2.000	-0.180	-0.900	0.180	0.92	-11.30	-19.86	-32.07
OH_Top (-X)	0.000	2.000	-0.180	-0.900	0.180	0.92	-11.30	-19.86	-32.07
OH_Top (+Y)	0.000	2.000	-0.180	-0.900	0.180	0.92	-11.30	-19.86	-32.07
OH_Top (-Y)	0.000	2.000	-0.180	-0.900	0.180	0.92	-11.30	-19.86	-32.07
OH_Top (+Y)	2.000	6.229	-0.180	-0.900	0.180	0.92	-11.30	-19.86	-32.07
OH_Top (-Y)	2.000	6.229	-0.180	-0.900	0.180	0.92	-11.30	-19.86	-32.07
OH_Top (+Y)	6.229	12.458	-0.180	-0.900	0.180	0.92	-11.30	-19.86	-32.07
OH_Top (-Y)	6.229	12.458	-0.180	-0.900	0.180	0.92	-11.30	-19.86	-32.07
OH_Top (+Y)	12.458	24.917	-0.180	-0.500	0.180	0.92	-11.30	-8.32	-20.53
OH_Top (-Y)	12.458	24.917	-0.180	-0.500	0.180	0.92	-11.30	-8.32	-20.53
OH_Top (+Y)	24.917	37.500	-0.180	-0.300	0.180	0.92	-11.30	-2.55	-14.76
OH_Top (-Y)	24.917	37.500	-0.180	-0.300	0.180	0.92	-11.30	-2.55	-14.76
OH_Top (+Y)	37.500	73.000	-0.180	-0.300	0.180	0.92	-11.30	-2.55	-14.76
OH_Top (-Y)	37.500	73.000	-0.180	-0.300	0.180	0.92	-11.30	-2.55	-14.76
OH_Top (+X)	73.000	75.000	-0.180	-0.300	0.180	0.92	-11.30	-2.55	-14.76
OH_Top (+X)	73.000	75.000	-0.180	-0.300	0.180	0.92	-11.30	-2.55	-14.76
OH_Top (+X)	73.000	75.000	-0.180	-0.300	0.180	0.92	-11.30	-2.55	-14.76
OH_Top (+X)	73.000	75.000	-0.180	-0.300	0.180	0.92	-11.30	-2.55	-14.76
OH_Top (+Y)	73.000	75.000	-0.180	-0.300	0.180	0.92	-11.30	-2.55	-14.76
OH_Top (-Y)	73.000	75.000	-0.180	-0.300	0.180	0.92	-11.30	-2.55	-14.76
Roof (+Y)	2.000	6.229	-0.180	-0.900	0.180	0.92	-11.30	-19.86	-32.07
Roof (-Y)	2.000	6.229	-0.180	-0.900	0.180	0.92	-11.30	-19.86	-32.07
Roof (+Y)	6.229	12.458	-0.180	-0.900	0.180	0.92	-11.30	-19.86	-32.07
Roof (-Y)	6.229	12.458	-0.180	-0.900	0.180	0.92	-11.30	-19.86	-32.07
Roof (+Y)	12.458	24.917	-0.180	-0.500	0.180	0.92	-11.30	-8.32	-20.53
Roof (-Y)	12.458	24.917	-0.180	-0.500	0.180	0.92	-11.30	-8.32	-20.53
Roof (+Y)	24.917	73.000	-0.180	-0.300	0.180	0.92	-11.30	-2.55	-14.76
Roof (-Y)	24.917	73.000	-0.180	-0.300	0.180	0.92	-11.30	-2.55	-14.76

Notes Roof Pressures:
Start Dist = Start Dist from Windward Edge End Dist = End Dist from Windward Edge

```
Cp_Max      = Largest Coefficient Magnitude  Cp_Min    = Smallest Coefficient Magnitude
Pp_max      = qh*G*Cp_max - qip*(+GCPi)      Pn_max    = qh*G*Cp_max - qin*(-GCpi)
Pp_min*     = qh*G*Cp_min - qip*(+GCPi)      Pn_min*   = qh*G*Cp_min - qin*(-GCPi)
OH = Overhang   X = Dir along Ridge   Y = Dir Perpendcular to Ridge  Z = Vertical
* The smaller uplift pressures due to Cp_Min can become critical when wind is combined
  with roof live load or snow load;  load combinations are given in ASCE 7
+ Pressures Acting TOWARD Surface          - Pressures Acting AWAY from Surface
```

```
Components and Cladding (C&C) Calculations per Ch 30 Part 1:
h/W       = Ratio of mean roof height to building width                          = 0.366
h/L       = Ratio of mean roof height to building length                         = 0.175
h         = Mean Roof Height above grade                                         = 12.458 ft
Kh        = Z < 15 ft [4.572 m]--> (2.01 * (15/zg)^(2/Alpha) {Table 26.10-1}= 0.849
Kzt       = Topographic Factor is 1 since no Topographic feature specified  = 1.000
Kd        = Wind Directionality Factor per Table 26.6-1                          = 0.85
GCPi      = Ref Table 26.13-1 for Enclosed Building                              = +/-0.18
LF        = Load Factor based upon ASD Design                                    = 0.60
qh        = (0.00256 * Kh * Kzt * Kd * Ke * V^2) * LF                            = 33.94 psf
LHD       = Least Horizontal Dimension:  Min(B, L)                               = 34.000 ft
a1        = Min(0.1 * LHD,  0.4 * h)                                             = 3.400 ft
a         = Max(a1, 0.04 * LHD, 3 ft [0.9 m])                                    = 3.400 ft
h/B       = Ratio of mean roof height to least hor dim: h / B                    = 0.366
```

Wind Pressures for C&C Ch 30 Pt 1
All wind pressures include a load factor of 0.6

Description	Zone	Width	Span	Area	1/3 Rule	Ref Fig	GCp Max	GCp Min	p Max	p Min
ft		ft	ft	sq ft					psf	psf
roof	1	2.000	36.000	432.00	Yes	30.3-2G	0.300	-0.800	16.29	-33.26
roof	2e	2.000	36.000	432.00	Yes	30.3-2G	0.300	-1.000	16.29	-40.05
roof	2r	2.000	36.000	432.00	Yes	30.3-2G	0.300	-1.000	16.29	-40.05
wlf	4	1.000	10.000	33.33	Yes	30.3-1	0.908	-1.008	36.92	-40.31
wlf	5	1.000	10.000	33.33	Yes	30.3-1	0.908	-1.215	36.92	-47.36

```
Area     = Span Length x Effective Width
1/3 Rule = Effective width need not be less than 1/3 of the span length
GCp      = External Pressure Coefficients taken from Figures 30.3-1 through 30.3-7
p        = Wind Pressure:  qh*(GCp - GCpi)  [Eqn 30.3-1]*
* Per Para 30.2.2 the Minimum Pressure for C&C is 9.60 psf [0.460 kPa] {Includes LF}
```

```
Components and Cladding (C&C) Overhang Calculations per Section 30.9:
h         = Mean Roof Height above grade                                         = 12.458 ft
Kh        = Z < 15 ft [4.572 m]--> (2.01 * (15/zg)^(2/Alpha) {Table 26.10-1}= 0.849
Kzt       = Topographic Factor is 1 since no Topographic feature specified  = 1.000
Kd        = Wind Directionality Factor per Table 26.6-1                          = 0.85
GCPi      = Ref Table 26.13-1 for Enclosed Building                              = +/-0.18
LF        = Load Factor based upon ASD Design                                    = 0.60
qh        = (0.00256 * Kh * Kzt * Kd * Ke * V^2) * LF                            = 33.94 psf
```

Wind Pressures for C&C per Section 30.9 & Figure 30.3-2
All wind pressures include a load factor of 0.6

Description	Zone	Width	Span Length	Area	1/3 Rule	Ref Fig	GCpi +/-	GCp Max	GCp Min	p Max	p Min
ft		ft	ft	sq ft						psf	psf
roof	2e_OHS	2.000	2.000	4.00	No	30.3-2G	0.18	0.000	-2.500	9.60	-90.96

```
#_OHS    = Zone # on Overhang w/ Sofit w/ Buildings Internal Pressure (GCPi = +/-0.18)
Area     = Span Length x Effective Width
1/3 Rule = Effective width need not be less than 1/3 of the span length
p        = Wind Pressure:  qh*(GCp - GCpi)*LF  [Eqn 30.3-1]*
* Per Para 30.2.2 the Minimum Pressure for C&C is 9.60 psf [0.460 kPa] {Includes LF}
Values of GCp for overhangs include contributions from both upper and lower surfaces.
```

Description

General Information

Code Ref: ACI 530-02

Wall Height	10.00 ft	Seismic Factor	0.0000	f'm	1,500.0 psi
Parapet Height	0.00 ft	Calc of Em = f'm *	900.00	Fs	24,000.0 psi
		Duration Factor	1.000	Special Inspection	
Thickness	8.0 in	Wall Wt Mult.	1.000	Grout @ Rebar Only	
Rebar Size	5			Normal Weight Block	
Rebar Spacing	32 in			Equivalent	
Depth to Rebar	3.810 in @ Center			Solid Thickness	4.900 in

Loads

Uniform Load		Concentric Axial Load		Wind Load	61.610 psf
Dead Load	0.000 #/ft	Dead Load	0.000 #/ft		
Live Load	0.000 #/ft	Live Load	0.000 #/ft		
Load Eccentricity	0.000 in	Roof Load			
Roof Load					

Design Values

E	1,350,000 psi	Rebar Area	0.116 in2	np	0.05462	j	0.90654
n : Es / Em	21.481	Radius of Gyration	2.487 in	k	0.28038	2 / kj	7.86864
Wall Weight	58.000 psf	Moment of Inertia	363.660 in4				

Max Allow Axial Stress = 0.25 f'm (1-(h/140r)^2) * SpInsp	330.45 psi
Allow Masonry Bending Stress = 0.33 f'm * SpInsp =	495.00 psi
Allow Steel Bending Stress =	24,000.00 psi

Load Combination & Stress Details Summary

	Moment	Axial Load	Bending Stresses Steel	Bending Stresses Masonry	Axial Compression
Top of Wall	in-#	lbs	psi	psi	psi
DL + LL	0.0	0.0	0.0	0.0	0.00
DL + LL + Wind	0.0	0.0	0.0	0.0	0.00
DL + LL + Seismic	0.0	0.0	0.0	0.0	0.00
Between Base & Top of Wall					
DL + LL	0.0	290.0	0.0	0.0	4.93
DL + LL + Wind	9,241.5	290.0	23,016.4	417.5	4.93
DL + LL + Seismic	0.0	290.0	0.0	0.0	4.93

Summary

10.00ft high wall with 0.00ft parapet, Normal Block w/ 8.00in wall w/ #5 bars at 32.00ino.c. at center

Max. Bending Compressive Stress	422.39	OK
Allowable	495.00	OK
Max. Axial Only Compressive Stress	4.93	psi
Allowable	330.45	OK
Max Steel Bending Stress	23,016.38	psi
Allowable	24,000.00	OK

Permit Reviews
City of Miami Springs

Permit Number: RES21-1143

Description: **ADDITION TO RESIDENCE AND OVERALL REMODELING TO EXIST RES.**

Applied: **12/10/2021**
Approved:
Issued:
Finaled:
Site Address: **200 ESPLANADE DRIVE**
City, State Zip Code: **MIAMI SPRINGS, FL 33166**
Status: **PLAN REVIEW**
Applicant: **<NONE>**
Parent Permit:
Owner: **JOVANY JIMENEZ & AMBAR SARA PREVAL**
Parent Project:
Contractor: **<NONE>**

Details:

NO SURVEY SUBMITTED

LIST OF REVIEWS

SENT DATE	RETURNED DATE	DUE DATE	TYPE	CONTACT	STATUS	REMARKS
Review Group: AUTO						
12/10/2021	3/17/2022	12/20/2021	BUILDING	ULISES FERNANDEZ	REWORK REQUIRED	
Notes: PROVIDE JOB COST. FURTHER COMPLIANCE W/ FLOOD MAY BE REQUIRED. FURTHER COMMENTS MAY FOLLOW. 1. PLEASE COORDINATE DEMOLITION PLANS TO SHOW ALL ITEMS BEING REMOVED (EX: INTERIOR PARTITIONS AND KITCHEN). 2. ANY ITEMS TO REMAIN, SHALL REQUIRE DETAIL. 3. ON SITE PLAN, PLEASE SHOW DIRECTION OF POWER SERVICE LINE. 4. ON DEMOLITION PLAN, SHOW THAT EXISTING ROOFING & ROOF STRUCTURE SHALL BE DEMOLISHED. 5. SHOW FLOOD CRITERIA ON PLANS. 6. SHOW SHGC & U FACTOR VALUES ON DOOR SCHEDULE FOR GLASS DOORS. 7. SHOW COMPLIANCE WITH SHOWER ACCESS AS PER FBC R P2708.1.1. 8. PLEASE PROVIDE SHOWER CURB DETAIL & SHOW TYPE OF SHOWER ENCLOSURE. 9. SUBMIT NOA FOR PRECAST LINTEL. 10. NOA'S SHALL BE MARKED/HIGHLIGHTED TO SHOW SELECTED MODEL TYPE & FASTENERS. 11. SEE MARK-UPS ON OFFICE COPY. 12. PROVIDE ANSWER SHEET TO COMMENTS WITH LOCATION OF CORRECTIONS ON DESGIN PROFESSIONAL'S LETTER HEAD.						
12/10/2021	2/17/2022	12/20/2021	ELECTRICAL	MIGUEL MENDEZ	REWORK REQUIRED	
Notes: MISSING RECEPTACKS TO COMPLY WITH NEC210.52 SEE MARKING						
12/10/2021	2/17/2022	12/20/2021	MECHANICAL	RON REGULA	APPROVED	
Notes:						
12/10/2021	2/12/2022	12/20/2021	PLUMBING	ELISEO ARES	APPROVED	
Notes: 1-WASHING MACHINE WET-VENT NOT TO CODE. 2-SHOW WATER HEATER DETAL ANS LOCATION ON PLAN. 3-PLASE DONT REMOVE REVIW PAGE.						

Permit Reviews
City of Miami Springs

12/10/2021		12/20/2021	ROOFING	ULISES FERNANDEZ		
Notes:						
12/10/2021	2/24/2022	12/20/2021	STRUCTURE	MISAEL RODRIGUEZ	REWORK REQUIRED	
Notes: PROVIDE STRUCTURAL CALCULATION FOR COMPLETE REVIEW						
12/10/2021	12/14/2021	12/20/2021	ZONING	CHRISTOPHER HEID	APPROVED	
Notes: SURVEY REQUIRED. TABULAR SUMMARY IN COMPARATIVE FORMAT REQUIRED. SEE SAMPLE DATA SHEET ATTACHED.						

OFFICE COPY
CITY OF MIAMI SPRINGS

CITY OF MIAMI SPRINGS
CITY PLANNER
201 WESTWARD DRIVE
MIAMI SPRINGS, FL 33166
(305)805-5034

CITY OF MIAMI SPRINGS
BUILDING DEPARTMENT
DEC 16 2021
RECEIVED

PROJECT DATA

To be submitted with new construction & additions

	ZONING DISTRICT		
		REQUIRED/ ALLOWED	PROVIDED
	NET LOT AREA	7,500	7,500
	PARKING SPACES	3	4
YARDS	FRONT	30'	15.09' exist. condition approved
	SIDE (CORNER)	15'	35.36' exist. condition approved
	SIDE (INTERIOR)	7.50'	7.67' new condition
	SIDE (INTERIOR)		
AREA CALCULATIONS	REAR	25.0'	13.86' approved to match exist. condition
	MINIMUM FLOOR AREA	1,200	2,374
	HEIGHT	25' to ridge	17'-6" proposed
	FRONT YARD PERVIOUS	1,350 60%	2,606 85%
	MAXIMUM LOT COVERAGE	40%	32%
	MINIMUM LANDSCAPED AREA	30%	57%

C:\Users\Alfonso\AppData\Local\Microsoft\Windows\INetCache\Content.Outlook\GTK249R4\PROJECT DATA.doc

U.S. DEPARTMENT OF HOMELAND SECURITY
Federal Emergency Management Agency
National Flood Insurance Program

CITY OF MIAMI SPRINGS
BUILDING DEPARTMENT

DEC 1 4 2021

RECEIVED

OMB No. 1660-0008
Expiration Date: November 30, 2022

ELEVATION CERTIFICATE

Important: Follow the instructions on pages 1-9.

Copy all pages of this Elevation Certificate and all attachments for (1)community official,(2) insurance agent/company and (3)building owner.

SECTION A - PROPERTY INFORMATION			FOR INSURANCE COMPANY USE
A1. Building Owner's Name Jovany Jimenez and Ambar Sara Preval			Policy Number:
A2. Building Street Address (including Apt., Unit, Suite, and/or Bldg. No.) or P.O. Route and Box No. 200 N. Esplanade Drive			Company NAIC Number:
City Miami Springs	State FLORIDA	ZIP Code 33166	

A3. Property Description (Lot and Block numbers, Tax Parcel Number, Legal Description, etc.)
TAX PARCEL ID: 05-3118-016-1590

A4. Building Use (e.g., Residential, Non-Residential, Addition, Accessory, Etc.) Residential

A5. Lattitude/Longitude: Lat. N 25°49'23.49 Long. W 80°17'9.09 Horizontal Datum: ☐ NAD 1927 ☒ NAD 1983

A6. Attach at least 2 photographs of the building if the Certificate is being used to obtain flood insurance

A7. Building Diagram number 1A

A8. For a building with a crawlspace or enclosure(s):

a) Square footage of crawlspace or enclosure(s) 0 Sq. Ft.

b) No. of permanent flood openings in the crawlspace or enclosure(s) within 1.0 foot above adjacent grade 0

c) Total net area of flood openings in A8.b 0 Sq. in.

d) Engineered flood openings? ☐ Yes ☒ No

A9. For a building with an attached garage:

a) Square footage of attached garage N/A Sq. Ft.

b) No. of permanent flood openings in the attached garage within 1.0 foot above adjacent grade N/A

c) Total net area of flood openings in A9.b N/A Sq. In.

d) Engineered flood openings? ☐ Yes ☒ No

SECTION B - FLOOD INSURANCE RATE MAP (FIRM) INFORMATION

B1. NFIP Community Name & Community Number	B2. County Name	B3. State
MIAMI SPRINGS/ 120653	Miami-Dade County	FLORIDA

B4.Map/Panel Number	B5.Suffix	B6.FIRM Index Date	B7.FIRM Panel Effective /Revised Date	B8.Flood Zone(s)	B9.Base Flood elevation(s) (Zone AO, use base flood depth)
12086C0283	L	09/11/2009	09/11/2009	AH	7.0'

B10.Indicate the source of the Base Flood Elevation (BFE) data or base flood depth entered in item B9:
☐ FIS Profile ☒ FIRM ☐ Community Determined ☐ Other (Describe) _____

B11. Indicate elevation datum used for BFE in Item B9: ☒ NGVD 1929 ☐ NAVD 1988 ☐ Other (Describe) _____

B12.Is the building located in a Costal Barrier Resources System (CBRS) area or Otherwise protected Area (OPA)? ☐ Yes ☒ No
Designation Date N/A ☐ CBRS ☐ OPA

ELEVATION CERTIFICATE

OMB No. 1660-0008

Expiration Date: November 30, 2022

IMPORTANT: In these spaces, copy the corresponding information from Section A.			FOR INSURANCE COMPANY USE
Building Street Address (including Apt., Unit, Suite, and/or Bldg. No.) or P.O. Route and Box No. 200 N. Esplanade Drive			Policy Number:
City Miami Springs	State FLORIDA	ZIP Code 33166	Company NAIC Number:

SECTION C - BUILDING ELEVATION INFORMATION (SURVEY REQUIRED)

C1. Building elevations are based on: ☐ Construction Drawings* ☐ Building Under Construction* ☒ Finished Construction

*A new Elevation Certificate will be required when construction of the building is complete.

C2. Elevations - Zones A1-A30, AE, AH, A (with BFE), VE, V1-V30, V (with BFE), AR, AR/A, AR/AE, AR/A1-A30, AR/AH, AR/AO. Complete items C2.a-h below according to the building diagram specified in item A7. IN Puerto Rico only, enter meters.

Benchmark Utilized: FDOT REAL TIME GPS Vertical Datum: NGVD 1929

Indicate elevation datum used for the elevations in items a) through h) below.

☒ NGVD 1929 ☐ NAVD 1988 ☐ Other/Source: _____

Datum used for building elevations must be the same as that used for the BFE.

		Check the measurement used.
a) Top of bottom floor (Including basement, crawlspace, or enclosure floor)	7 . 29	☒ feet ☐ meters
b) Top of the next highest floor	N/A .	☐ feet ☐ meters
c) Bottom of the lowest horizontal structural member (V Zones only)	N/A .	☐ feet ☐ meters
d) Attached Garage (top of slab)	6 . 56	☒ feet ☐ meters
e) Lowest elevation of machinery or equipment servicing the building (Describe type of equipment and location in Comments)	N/A .	☐ feet ☐ meters
f) Lowest adjacent (finished) grade next to building (LAG)	6 . 38	☒ feet ☐ meters
g) Highest adjacent (finished) grade next to building (HAG)	6 . 47	☒ feet ☐ meters
h) Lowest adjacent grade at lowest elevation of deck or stairs including structural support	N/A .	☐ feet ☐ meters

SECTION D – SURVEYOR, ENGINEER, OR ARCHITECT CERTIFICATION

This certification is to be signed and sealed by a land surveyor, engineer, or architect authorized by law to certify elevation information.
I certify that the information on this Certificate represents my best efforts to interpret the data available. I understand that any false statement may be punishable by fine or imprisonment under 18 U.S. Code, Section 1001.

Were latitude and longitude in Section A provided by a licensed land surveyor? ☐ Yes ☒ No ☐ Check here if attachments.

Certifier's Name	License number	
FERNANDO FERNANDEZ	6765	
Title		
PROFESSIONAL SURVEYOR & MAPPER		
Company Name		
ME LAND SURVEYING		
Address		
10665 SW 190th STREET SUITE 3110		
City	State	ZIP Code
MIAMI	FL	33157



Signature  Date 07/29/2021 Telephone (305) 740-3319

Copy all pages of this Elevation Certificate and all attachments for (1) community official, (2)insurance agent/company, (3) building owner.

Comments (including type of equipment and location, per C2(e), if applicable)
LATITUDE LONGITUDE PER GOOGLE, ATTACHMENTS = BUILDING PICTURES
VERTCON CONVERSION NAVD 1988 TO NGVD 1929= +1.55'
This elevation certificate is for flood insurance rating purposes only and may not be used for building permitting purposes due to measurement precision issues.

ELEVATION CERTIFICATE

OMB No. 1660-0008

Expiration Date: November 30, 2022

IMPORTANT: In these spaces, copy the corresponding information from Section A.			FOR INSURANCE COMPANY USE
Building Street Address (including Apt., Unit, Suite, and/or Bldg. No.) or P.O. Route and Box No. 200 N. Esplanade Drive			Policy Number:
City Miami Springs	State FLORIDA	ZIP Code 33166	Company NAIC Number:

SECTION E - BUILDING ELEVATION INFORMATION (SURVEY NOT REQUIRED)
FOR ZONE AO AND ZONE A (WITHOUT BFE)

For Zones AO and A (without BFE), complete Items E1–E5. If the Certificate is intended to support a LOMA or LOMR-F request, complete Sections A, B,and C. For Items E1–E4, use natural grade, if available. Check the measurement used. In Puerto Rico only, enter meters.

E1. Provide elevation information for the following and check the appropriate boxes to show whether the elevation is above or below the highest adjacent grade (HAG) and the lowest adjacent grade (LAG).

a) Top of bottom floor (including basement, crawlspace, or enclosure) is _____ . _____ ☐ feet ☐ meters ☐ above or ☐ below the HAG

b) Top of bottom floor (including basement, crawlspace, or enclosure) is _____ . _____ ☐ feet ☐ meters ☐ above or ☐ below the LAG

E2. For Building Diagrams 6-9 with permanent flood openings provided in Section A Items 8 and/or 9 (see pages 8-9 of instructions), the next higher floor (elevation C2.b in the diagrams) of the building is _____ . _____ ☐ feet ☐ meters ☐ above or ☐ below the HAG

E3. Attached garage (top of slab) is _____ . _____ ☐ feet ☐ meters ☐ above or ☐ below the HAG

E4. Top of platform of machinery and/or equipment servicing the building is _____ . _____ ☐ feet ☐ meters ☐ above or ☐ below the HAG

E5. Zone AO only: If no flood depth number is available, is the top of the bottom floor elevated in accordance with the community's floodplain management ordinance?

☐ Yes ☐ No ☒ Unknown. The local official must certify this information in Section G.

SECTION F - PROPERTY OWNER (OR OWNER'S REPRESENTATIVE) CERTIFICATION

The property owner or owner's authorized representative who completes Sections A, B, and E for Zone A (without a FEMA-issued or community-issued BFE) or Zone AO must sign here. *The statements in sections A, B, abd E are correct to the best of my knowledge .*

Property Owner's or Owner's Authorized Representative's Name			
Address	City	State	ZIP Code
Signature	Date	Telephone	

Comments

☐ Check here if attachments.

ELEVATION CERTIFICATE

OMB No. 1660-0008

Expiration Date: November 30, 2022

IMPORTANT: In these spaces, copy the corresponding information from Section A.			FOR INSURANCE COMPANY USE
Building Street Address (including Apt., Unit, Suite, and/or Bldg. No.) or P.O. Route and Box No. 200 N. Esplanade Drive			Policy Number:
City Miami Springs	State FLORIDA	ZIP Code 33166	Company NAIC Number:

SECTION G - COMMUNITY INFORMATION (OPTIONAL)

The local official who is authorized by law or ordinance to administer the community's floodplain management ordinance can complete Sections A, B, C (or E), and G of this Elevation Certificate. Complete the applicable item(s) and sign below. Check measurement used in items G8 - G10. In Puerto Rico only, enter meters.

G1. ☐ The information in Section C was taken from other documentation that has been signed and sealed by a licensed surveyor, engineer, or architect who is authorized by law to certify elevation information. (Indicate the source and date of the elevation data in the Comments area below.)

G2. ☐ A community official completed Section E for a building located in Zone A (without a FEMA-issued or community-issued BFE) or Zone AO.

G3. ☐ The following information (Items G4-G10) is provided for community floodplain management purposes.

G4. Permit Number	G5. Date Permit Issued	G6. Date Certificate Of Complicance/Occupancy Issued

G7. This permit has been issued for: ☐ New Construction ☐ Substantial Improvement

G8. Elevation of as-built lowest floor (including basement) of the building: _____ . _____ ☐ feet ☐ meters Datum _____

G9. BFE or (in Zone AO) depth of flooding at the building site: _____ . _____ ☐ feet ☐ meters Datum _____

G10. Community's design flood elevation _____ . _____ ☐ feet ☐ meters Datum _____

Local Official's Name	Title
Community Name	Telephone
Signature	Date

Comments

☐ Check here if attachments.

ELEVATION CERTIFICATE

BUILDING PHOTOGRAPHS
See Instructions for Item A6.

OMB No. 1660-0008
Expiration Date: November 30, 2022

IMPORTANT: In these spaces, copy the corresponding information from Section A.			FOR INSURANCE COMPANY USE
Building Street Address (including Apt., Unit, Suite, and/or Bldg. No.) or P.O. Route and Box No. 200 N. Esplanade Drive			Policy Number:
City Miami Springs	State FLORIDA	ZIP Code 33166	Company NAIC Number:

If using the Elevation Certificate to obtain NFIP flood insurance, affix at least 2 building photographs below according to the instructions for Item A6. Identify all photographs with date taken; "Front View" and "Rear View"; and, if required, "Right Side View" and "Left Side View." When applicable, photographs must show the foundation with representative examples of the flood openings or vents, as indicated in Section A8. If submitting more photographs than will fit on this page, use the Continuation Page.

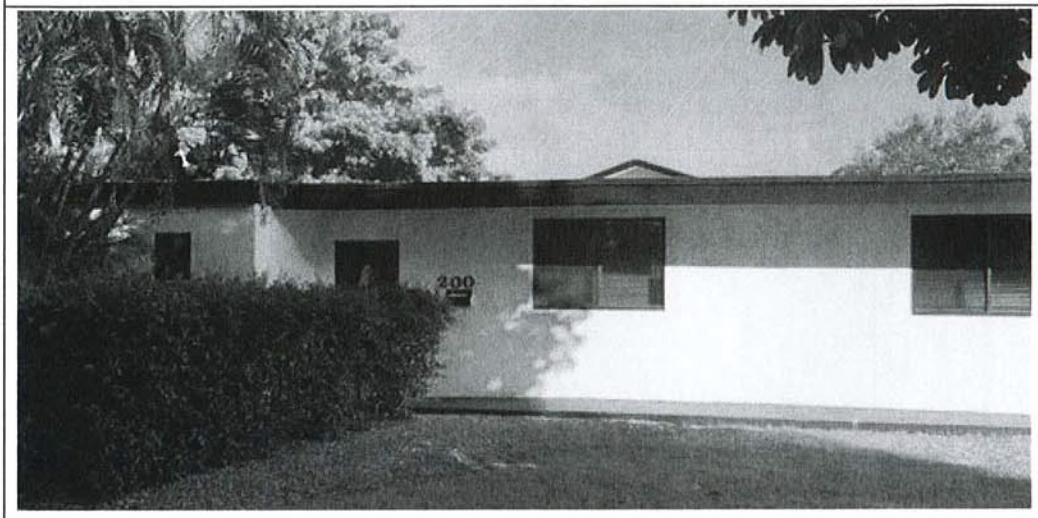

Photo One

Photo One Caption Photo Taken 07/27/2021 "Front View"



Photo Two

Photo Two Caption Photo Taken 07/27/2021 "Rear View"

ELEVATION CERTIFICATE

BUILDING PHOTOGRAPHS
Continuation Page

OMB No. 1660-0008
Expiration Date: November 30, 2022

IMPORTANT: In these spaces, copy the corresponding information from Section A.			FOR INSURANCE COMPANY USE
Building Street Address (including Apt., Unit, Suite, and/or Bldg. No.) or P.O. Route and Box No. 200 N. Esplanade Drive			Policy Number:
City Miami Springs	State FLORIDA	ZIP Code 33166	Company NAIC Number:

If submitting more photographs than will fit on the preceding page, affix the additional photographs below. Identify all photographs with: date taken; "Front View" and "Rear View"; and, if required, "Right Side View" and "Left Side View." When applicable, photographs must show the foundation with representative examples of the flood openings or vents, as indicated in Section A8.

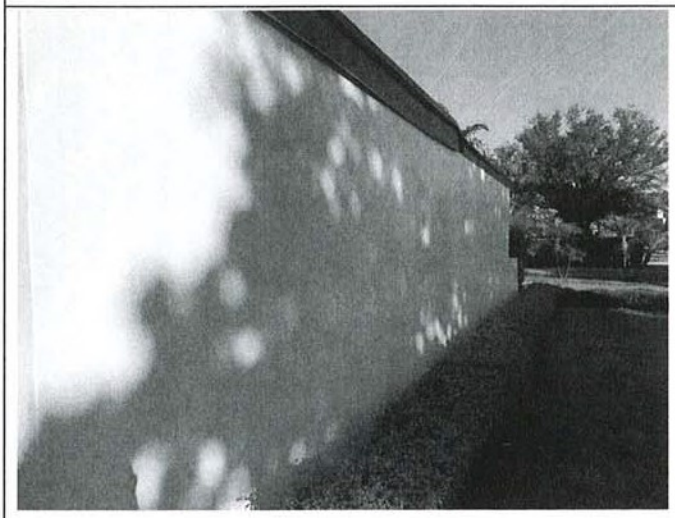

Photo One

Photo One Caption Photo Taken 07/27/2021 "Left View"

Photo Two

Photo Two Caption Photo Taken 07/27/2021 "Right View"

OFFICE COPY
CITY OF MIAMI SPRINGS

CITY OF MIAMI SPRINGS
BUILDING DEPARTMENT
DEC 10 2021
RECEIVED

FORM R405-2020

FLORIDA ENERGY EFFICIENCY CODE FOR BUILDING CONSTRUCTION

Florida Department of Business and Professional Regulation - Residential Performance Method

Project Name:	200 Preval Project	Builder Name:	
Street:	200 N. Esplanade Drive	Permit Office:	Miami Springs Bldg. Dept.
City, State, Zip:	Miami Springs , FL , 33166	Permit Number:	
Owner:	Ambar Preval	Jurisdiction:	232700
Design Location:	FL, Miami	County:	Miami-Dade (Florida Climate Zone 1)

1. New construction or existing	Addition			
2. Single family or multiple family	Attached			
3. Number of units, if multiple family	1			
4. Number of Bedrooms(Bedrms In Addition)	4(2)			
5. Is this a worst case?	No			
6. Conditioned floor area above grade (ft²)	1907			
Conditioned floor area below grade (ft²)	0			
7. Windows(215.0 sqft.)	Description		Area	
a. U-Factor:	Sgl, U=1.30		121.64 ft²	
SHGC:	SHGC=0.50			
b. U-Factor:	Sgl, U=1.20		75.40 ft²	
SHGC:	SHGC=0.45			
c. U-Factor:	Dbl, U=1.20		18.00 ft²	
SHGC:	SHGC=0.45			
Area Weighted Average Overhang Depth:			4.716 ft.	
Area Weighted Average SHGC:			0.478	
8. Skylights			Area	
c. U-Factor:(AVG)	N/A		ft²	
SHGC(AVG):	N/A			
9. Floor Types (1907.0 sqft.)		Insulation	Area	
a. Slab-On-Grade Edge Insulation		R=0.0	1907.00 ft²	
b. N/A		R=	ft²	
c. N/A		R=	ft²	

10. Wall Types(1762.6 sqft.)	Insulation	Area	
a. Concrete Block - Int Insul, Exterior	R=3.0	1300.50 ft²	
b. Concrete Block - Int Insul, Exterior	R=4.1	462.10 ft²	
c. N/A	R=	ft²	
d. N/A	R=	ft²	
11. Ceiling Types (1907.0 sqft.)	Insulation	Area	
a. Under Attic (Vented)	R=19.0	1544.00 ft²	
b. Under Attic (Vented)	R=30.0	363.00 ft²	
c. N/A	R=	ft²	
12. Ducts		R	ft²
a. Sup: Attic, Ret: Main, AH: Main		6	365
13. Cooling systems	kBtu/hr	Efficiency	
a. Central Unit	57.0	SEER:16.00	
14. Heating systems	kBtu/hr	Efficiency	
a. Electric Strip Heat	34.0	COP:1.00	
15. Hot water systems - Replacement equipment			
a. Electric Tankless		Cap: 1 gallons	
		EF: 0.990	
b. Conservation features			
None			
16. Credits		Pstat	

Glass/Floor Area: 0.113

Total Proposed Modified Loads: 77.39

Total Baseline Loads: 80.72

PASS

I hereby certify that the plans and specifications covered by this calculation are in compliance with the Florida Energy Code.

PREPARED BY: _____

DATE: 12-4-21

I hereby certify that this building, as designed, is in compliance with the Florida Energy Code.

OWNER/AGENT: _____

DATE: 12-4-21

Review of the plans and specifications covered by this calculation indicates compliance with the Florida Energy Code. Before construction is completed this building will be inspected for compliance with Section 553.908 Florida Statutes.

BUILDING OFFICIAL: _____

DATE: _____

- **Compliance requires certification by the air handler unit manufacturer that the air handler enclosure qualifies as certified factory-sealed in accordance with R403.3.2.1.**
- **Compliance requires an Air Barrier and Insulation Inspection Checklist in accordance with R402.4.1.1 and this project requires an envelope leakage test report with envelope leakage no greater than 5.00 ACH50 (R402.4.1.2).**
- **Compliance with a proposed duct leakage Qn requires a Duct Leakage Test Report confirming duct leakage to outdoors, tested in accordance with ANSI/RESNET/ICC 380, is not greater than 0.030 Qn for whole house.**

FORM R405-2020

INPUT SUMMARY CHECKLIST REPORT

PROJECT

Title:	200 Preval Project	Bedrooms:	4	Address Type:	Street Address
Building Type:	User	Conditioned Area:	1907	Lot #	1 & 2
Owner Name:	Ambar Preval	Total Stories:	1	Block/Subdivision:	58
# of Units:	1	Worst Case:	No	PlatBook:	17, PG 2
Builder Name:		Rotate Angle:	0	Street:	200 N. Esplanade Drive
Permit Office:	Miami Springs Bldg. Dept.	Cross Ventilation:		County:	Miami-Dade
Jurisdiction:	232700	Whole House Fan:		City, State, Zip:	Miami Springs , FL , 33166
Family Type:	Attached				
New/Existing:	Addition				
Comment:					

CLIMATE

√	Design Location	TMY Site	Design Temp 97.5 %	Design Temp 2.5 %	Int Design Temp Winter	Int Design Temp Summer	Heating Degree Days	Design Moisture	Daily Temp Range
_____	FL, Miami	FL_MIAMI_INTL_AP	51	90	70	75	149.5	56	Low

BLOCKS

Number	Name	Area	Volume
1	Block1	1907	15637.4

SPACES

Number	Name	Area	Volume	Kitchen	Occupants	Bedrooms	Infil ID	Finished	Cooled	Heated
1	Main	1544	12660.8	Yes	3	2	1	Yes	Yes	Yes
2	NewSpace2	363	2976.6	No	2	2	1	No	Yes	Yes

FLOORS

√	#	Floor Type	Space	Perimeter	Perimeter R-Value	Area	Joist R-Value	Tile	Wood	Carpet
_____	1	Slab-On-Grade Edge Insulatio	Main	163 ft	0	1544 ft²	----	0.02	0	0.98
_____	2	Slab-On-Grade Edge Insulatio	NewSpace2	56.5 ft	0	363 ft²	----	0.02	0	0.98

ROOF

√	#	Type	Materials	Roof Area	Gable Area	Roof Color	Rad Barr	Solar Absor.	SA Tested	Emitt	Emitt Tested	Deck Insul.	Pitch (deg)
_____	1	Hip	Composition shingles	2066 ft²	0 ft²	Medium	N	0.96	No	0.9	No	0	22.62

ATTIC

√	#	Type	Ventilation	Vent Ratio (1 in)	Area	RBS	IRCC
_____	1	Full attic	Vented	300	1907 ft²	N	N

FORM R405-2020

INPUT SUMMARY CHECKLIST REPORT

CEILING

√	#	Ceiling Type	Space	R-Value	Ins Type	Area	Framing Frac	Truss Type
_____	1	Under Attic (Vented)	Main	19	Blown	1544 ft²	0.11	Wood
_____	2	Under Attic (Vented)	NewSpace2	30	Blown	363 ft²	0.11	Wood

WALLS

√	#	Ornt	Adjacent To	Wall Type	Space	Cavity R-Value	Width Ft	Width In	Height Ft	Height In	Area	Sheathing R-Value	Framing Fraction	Solar Absor.	Below Grade%
____	1	SW	Exterior	Concrete Block - Int Insul	NewSpace2	4.0999	1	5	8	2	11.6 ft²		0	0.75	0
____	2	NW	Exterior	Concrete Block - Int Insul	NewSpace2	4.0999	10	11	8	2	89.2 ft²		0	0.75	0
____	3	NE	Exterior	Concrete Block - Int Insul	NewSpace2	4.0999	33	4	8	2	272.2 ft²		0	0.75	0
____	4	SE	Exterior	Concrete Block - Int Insul	NewSpace2	4.0999	10	11	8	2	89.2 ft²		0	0.75	0
____	5	SE	Exterior	Concrete Block - Int Insul	Main	3	36	6	8	2	298.1 ft²		0	0.75	0
____	6	NE	Exterior	Concrete Block - Int Insul	Main	3	5	4	8	2	43.6 ft²		0	0.75	0
____	7	SE	Exterior	Concrete Block - Int Insul	Main	3	14	8	8	2	119.8 ft²		0	0.75	0
____	8	SW	Exterior	Concrete Block - Int Insul	Main	3	5	4	8	2	43.6 ft²		0	0.75	0
____	9	SE	Exterior	Concrete Block - Int Insul	Main	3	5	4	8	2	43.6 ft²		0	0.75	0
____	10	SW	Exterior	Concrete Block - Int Insul	Main	3	14	6	8	2	118.4 ft²		0	0.75	0
____	11	NW	Exterior	Concrete Block - Int Insul	Main	3	26	10	8	2	219.1 ft²		0	0.75	0
____	12	SW	Exterior	Concrete Block - Int Insul	Main	3	17	5	8	2	142.2 ft²		0	0.75	0
____	13	NW	Exterior	Concrete Block - Int Insul	Main	3	33	4	8	2	272.2 ft²		0	0.75	0

WINDOWS

Orientation shown is the entered, Proposed orientation.

√	#	Ornt	Wall ID	Frame	Panes	NFRC	U-Factor	SHGC	Imp	Area	Overhang Depth	Overhang Separation	Int Shade	Screening
_____	1	NE	3	Metal	Single (Clear)	Yes	1.2	0.45	Y	18.4 ft²	2 ft 0 in	1 ft 2 in	None	None
_____	2	SE	4	Metal	Single (Clear)	Yes	1.3	0.5	Y	18.4 ft²	2 ft 0 in	1 ft 1 in	None	None
_____	3	SE	5	Metal	Single (Clear)	Yes	1.3	0.5	N	18.0 ft²	2 ft 0 in	1 ft 5 in	None	None
_____	4	SE	5	Metal	Single (Clear)	Yes	1.3	0.5	Y	40.0 ft²	2 ft 0 in	1 ft 1 in	None	None
_____	5	SE	7	Metal	Single (Clear)	Yes	1.3	0.5	N	5.2 ft²	2 ft 0 in	1 ft 5 in	None	None
_____	6	NW	11	Metal	Double (Tinted)	Yes	1.2	0.45	Y	18.0 ft²	10 ft 0 in	1 ft 5 in	None	None
_____	7	NW	11	Metal	Single (Clear)	Yes	1.2	0.45	Y	6.0 ft²	10 ft 0 in	1 ft 5 in	None	None
_____	8	NW	11	Metal	Single (Clear)	Yes	1.2	0.45	Y	9.0 ft²	10 ft 0 in	1 ft 5 in	None	None
_____	9	SW	12	Metal	Single (Clear)	Yes	1.3	0.5	Y	40.0 ft²	10 ft 0 in	1 ft 5 in	None	None
_____	10	NW	13	Metal	Single (Clear)	Yes	1.2	0.45	Y	18.0 ft²	2 ft 0 in	1 ft 5 in	None	None
_____	11	NW	13	Metal	Single (Clear)	Yes	1.2	0.45	Y	24.0 ft²	2 ft 0 in	1 ft 5 in	None	None

INFILTRATION

#	Scope	Method	SLA	CFM 50	ELA	EqLA	ACH	ACH 50
1	Wholehouse	Proposed ACH(50)	.00026	1303.1	71.49	134.22	.1068	5

FORM R405-2020

INPUT SUMMARY CHECKLIST REPORT

HEATING SYSTEM

√	#	System Type	Subtype	Speed	Efficiency	Capacity	Block	Ducts
_____	1	Electric Strip Heat/Replaceme	None		COP:1	34 kBtu/hr	1	sys#1

COOLING SYSTEM

√	#	System Type	Subtype	Subtype	Efficiency	Capacity	Air Flow	SHR	Block	Ducts
_____	1	Central Unit/Replacement for	Split	Singl	SEER: 16	57 kBtu/hr	1710 cfm	0.75	1	sys#1

HOT WATER SYSTEM

√	#	System Type	SubType	Location	EF	Cap	Use	SetPnt	Conservation
_____	1	Electric	Tankless	Main	0.99	1 gal	70 gal	120 deg	None

SOLAR HOT WATER SYSTEM

√	FSEC Cert #	Company Name	System Model #	Collector Model #	Collector Area	Storage Volume	FEF
_____	None	None			ft²		

DUCTS

√	#	--- Supply --- Location	R-Value	Area	--- Return --- Location	Area	Leakage Type	Air Handler	CFM 25 TOT	CFM25 OUT	QN	RLF	HVAC # Heat	Cool
_____	1	Attic	6	365 ft²	Main	90 ft²	Prop. Leak Free	Main	--- cfm	57.2 cfm	0.03	0.50	1	1

TEMPERATURES

Programable Thermostat: Y

Ceiling Fans:

	Jan	Feb	Mar	Apr	May	Jun	Jul	Aug	Sep	Oct	Nov	Dec
Cooling	[ ]	[ ]	[ ]	[ ]	[ ]	[X]	[X]	[X]	[X]	[ ]	[ ]	[ ]
Heating	[X]	[X]	[X]	[ ]	[ ]	[ ]	[ ]	[ ]	[ ]	[ ]	[X]	[X]
Venting	[ ]	[ ]	[X]	[X]	[ ]	[ ]	[ ]	[ ]	[ ]	[X]	[X]	[ ]

Thermostat Schedule: HERS 2006 Reference

Schedule Type		Hours 1	2	3	4	5	6	7	8	9	10	11	12
Cooling (WD)	AM	78	78	78	78	78	78	78	78	80	80	80	80
	PM	80	80	78	78	78	78	78	78	78	78	78	78
Cooling (WEH)	AM	78	78	78	78	78	78	78	78	78	78	78	78
	PM	78	78	78	78	78	78	78	78	78	78	78	78
Heating (WD)	AM	66	66	66	66	66	68	68	68	68	68	68	68
	PM	68	68	68	68	68	68	68	68	68	68	66	66
Heating (WEH)	AM	66	66	66	66	66	68	68	68	68	68	68	68
	PM	68	68	68	68	68	68	68	68	68	68	66	66

MASS

Mass Type	Area	Thickness	Furniture Fraction	Space
Default(8 lbs/sq.ft.	0 ft²	0 ft	0.3	Main
Default(8 lbs/sq.ft.	0 ft²	0 ft	0.3	NewSpace2

2020 - AIR BARRIER AND INSULATION INSPECTION COMPONENT CRITERIA

TABLE 402.4.1.1
AIR BARRIER AND INSULATION INSPECTION COMPONENT CRITERIA [a]

				CHECK
Project Name:	200 Preval Project	Builder Name:		
Street:	200 N. Esplanade Drive	Permit Office:	Miami Springs Bldg. Dept.	
City, State, Zip:	Miami Springs , FL , 33166	Permit Number:		
Owner:	Ambar Preval	Jurisdiction:	232700	
Design Location:	FL, Miami			

COMPONENT	AIR BARRIER CRITERIA	INSULATION INSTALLATION CRITERIA	
General requirements	A continuous air barrier shall be installed in the building envelope. The exterior thermal envelope contains a continuous air barrier. Breaks or joints in the air barrier shall be sealed.	Air-permeable insulation shall not be used as a sealing material.	
Ceiling/attic	The air barrier in any dropped ceiling/soffit shall be aligned with the insulation and any gaps in the air barrier shall be sealed. Access openings, drop down stairs or knee wall doors to unconditioned attic spaces shall be sealed.	The insulation in any dropped ceiling/soffit shall be aligned with the air barrier.	
Walls	The junction of the foundation and sill plate shall be sealed. The junction of the top plate and the top of exterior walls shall be sealed. Knee walls shall be sealed.	Cavities within corners and headers of frame walls shall be insulated by completely filling the cavity with a material having a thermal resistance of R-3 per inch minimum. Exterior thermal envelope insulation for framed walls shall be installed in substantial contact and continuous alignment with the air barrier.	
Windows, skylights and doors	The space between window/door jambs and framing, and skylights and framing shall be sealed.		✓
Rim joists	Rim joists shall include the air barrier.	Rim joists shall be insulated.	
Floors (including above-garage and cantilevered floors)	The air barrier shall be installed at any exposed edge of insulation.	Floor framing cavity insulation shall be installed to maintain permanent contact with the underside of subfloor decking, or floor framing cavity insulation shall be permitted to be in contact with the top side of sheathing, or continuous insulation installed on the underside of floor framing and extends from the bottom to the top of all perimeter floor framing members.	✓
Crawl space walls	Exposed earth in unvented crawl spaces shall be covered with a Class I vapor retarder with overlapping joints taped.	Where provided instead of floor insulation, insulation shall be permanently attached to the crawlspace walls.	
Shafts, penetrations	Duct shafts, utility penetrations, and flue shafts opening to exterior or unconditioned space shall be sealed.		
Narrow cavities		Batts in narrow cavities shall be cut to fit, or narrow cavities shall be filled by insulation that on installation readily conforms to the available cavity spaces.	
Garage separation	Air sealing shall be provided between the garage and conditioned spaces.		
Recessed lighting	Recessed light fixtures installed in the building thermal envelope shall be sealed to the finished surface.	Recessed light fixtures installed in the building thermal envelope shall be air tight and IC rated.	✓
Plumbing and wiring		Batt insulation shall be cut neatly to fit around wiring and plumbing in exterior walls, or insulation that on installation readily conforms to available space shall extend behind piping and wiring.	✓
Shower/tub on exterior wall	The air barrier installed at exterior walls adjacent to showers and tubs shall separate them from the showers and tubs.	Exterior walls adjacent to showers and tubs shall be insulated.	✓
Electrical/phone box on exterior walls	The air barrier shall be installed behind electrical or communication boxes or air-sealed boxes shall be installed.		✓
HVAC register boots	HVAC supply and return register boots that penetrate building thermal envelope shall be sealed to the sub-floor, wall covering or		✓
Concealed sprinklers	When required to be sealed, concealed fire sprinklers shall only be sealed in a manner that is recommended by the manufacturer. Caulking or other adhesive sealants shall not be used to fill voids between fire sprinkler cover plates and walls or ceilings.		

a. In addition, inspection of log walls shall be in accordance with the provisions of ICC-400.

FORM R405-2020

ENERGY PERFORMANCE LEVEL (EPL) DISPLAY CARD

ESTIMATED ENERGY PERFORMANCE INDEX* = 96

The lower the EnergyPerformance Index, the more efficient the home.

200 N. Esplanade Drive, Miami Springs, FL, 33166

1. New construction or existing		Addition
2. Single family or multiple family		Attached
3. Number of units, if multiple family		1
4. Number of Bedrooms		4(2)
5. Is this a worst case?		No
6. Conditioned floor area (ft²)		1907

7. Windows**	Description	Area
a. U-Factor:	Sgl, U=1.30	121.64 ft²
SHGC:	SHGC=0.50	
b. U-Factor:	Sgl, U=1.20	75.40 ft²
SHGC:	SHGC=0.45	
c. U-Factor:	Dbl, U=1.20	18.00 ft²
SHGC:	SHGC=0.45	
d. U-Factor:	N/A	ft²
SHGC:		
Area Weighted Average Overhang Depth:		4.716 ft.
Area Weighted Average SHGC:		0.478

8. Skylights	Description	Area
a. U-Factor(AVG):	N/A	ft²
SHGC(AVG):	N/A	

9. Floor Types	Insulation	Area
a. Slab-On-Grade Edge Insulation	R=0.0	1907.00 ft²
b. N/A	R=	ft²
c. N/A	R=	ft²

10. Wall Type and Insulation	Insulation	Area
a. Concrete Block - Int Insul, Exterior	R=3.0	1300.50 ft²
b. Concrete Block - Int Insul, Exterior	R=4.1	462.10 ft²
c. N/A	R=	ft²
d. N/A	R=	ft²

11. Ceiling Type and insulation level	Insulation	Area
a. Under Attic (Vented)	R=19.0	1544.00 ft²
b. Under Attic (Vented)	R=30.0	363.00 ft²
c. N/A	R=	ft²

12. Ducts, location & insulation level	R	ft²
a. Sup: Attic, Ret: Main, AH: Main	6	365

13. Cooling systems	kBtu/hr	Efficiency
a. Central Unit	57.0	SEER:16.00

14. Heating systems	kBtu/hr	Efficiency
a. Electric Strip Heat	34.0	COP:1.00

15. Hot water systems - Replacement equipment	
a. Electric	Cap: 1 gallons EF: 0.99
b. Conservation features None	
Credits (Performance method)	Pstat

C it's DESIGN STAGE

I certify that this home has complied with the Florida Energy Efficiency Code for Building Construction through the above energy saving features which will be installed (or exceeded) in this home before final inspection. Otherwise, a new EPL Display Card will be completed based on installed Code compliant features.

Builder Signature: _____ Date: 12-4-21

Address of New Home: 200 N. Esplanade Dr. City/FL Zip: Miami Springs FL 33166

*Note: This is not a Building Energy Rating. If your Index is below 70, your home may qualify for energy efficient mortgage (EEM) incentives if you obtain a Florida Energy Rating. For information about the Florida Building Code, Energy Conservation, contact the Florida Building Commission's support staff.

**Label required by Section R303.1.3 of the Florida Building Code, Energy Conservation, if not DEFAULT.

Residential System Sizing Calculation

Summary

Ambar Preval
200 N. Esplanade Drive
Miami Springs, FL 33166

Project Title:
200 Preval Project

12/1/2021

Location for weather data: Miami, FL - Defaults: Latitude(26) Altitude(30 ft.) Temp Range(L)					
Humidity data: Interior RH (50%) Outdoor wet bulb (82F) Humidity difference(57gr.)					
Winter design temperature(MJ8 99%)	52	F	Summer design temperature(MJ8 99%)	112	F
Winter setpoint	70	F	Summer setpoint	75	F
Winter temperature difference	18	F	Summer temperature difference	37	F
Total heating load calculation	**19568**	**Btuh**	**Total cooling load calculation**	**51040**	**Btuh**
Submitted heating capacity	% of calc	Btuh	Submitted cooling capacity	% of calc	Btuh
Total (Electric Strip Heat)	173.8	34000	Sensible (SHR = 0.75)	95.0	42750
			Latent	235.9	14250
			Total	111.7	57000

WINTER CALCULATIONS

Winter Heating Load (for 1907 sqft)

Load component			Load	
Window total	215	sqft	4864	Btuh
Wall total	1548	sqft	4749	Btuh
Door total	0	sqft	0	Btuh
Ceiling total	1907	sqft	1570	Btuh
Floor total	See detail report		4662	Btuh
Infiltration	45	cfm	881	Btuh
Duct loss			2841	Btuh
Subtotal			**19568**	**Btuh**
Ventilation	0	cfm	0	Btuh
TOTAL HEAT LOSS			**19568**	**Btuh**

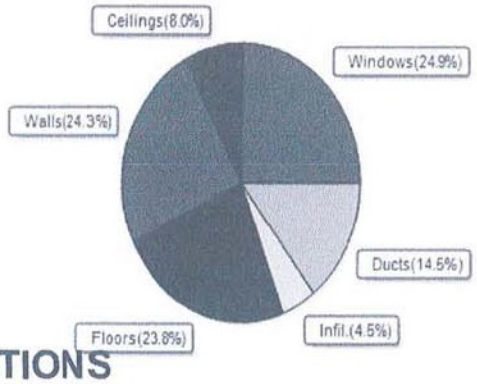

SUMMER CALCULATIONS

Summer Cooling Load (for 1907 sqft)

Load component			Load	
Window total	215	sqft	15072	Btuh
Wall total	1548	sqft	10897	Btuh
Door total	0	sqft	0	Btuh
Ceiling total	1907	sqft	5758	Btuh
Floor total			0	Btuh
Infiltration	33	cfm	1358	Btuh
Internal gain			8150	Btuh
Duct gain			3766	Btuh
Sens. Ventilation	0	cfm	0	Btuh
Blower Load			0	Btuh
Total sensible gain			**45001**	**Btuh**
Latent gain(ducts)			447	Btuh
Latent gain(infiltration)			1293	Btuh
Latent gain(ventilation)			0	Btuh
Latent gain(internal/occupants/other)			4300	Btuh
Total latent gain			**6040**	**Btuh**
TOTAL HEAT GAIN			**51040**	**Btuh**

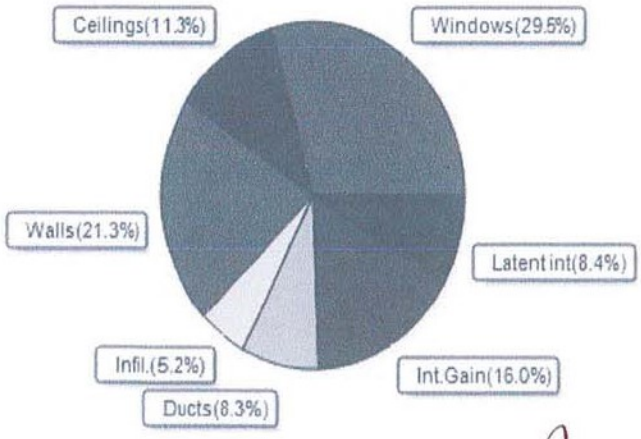

Powered by ACCA MANUAL J

8th Edition

EnergyGauge® System Sizing
PREPARED BY: [signature]
DATE: 12-4-21

EnergyGauge® / USRCZB v7.0.00

System Sizing Calculations - Summer

Residential Load - Room by Room Component Details

Ambar Preval
200 N. Esplanade Drive
Miami Springs, FL 33166

Project Title:
200 Preval Project

12/1/2021

Reference City: Miami, FL Temperature Difference: 37.0F(MJ8 99%) Humidity difference: 57gr.

Component Loads for Room #1: Main

Window	Type* Panes	SHGC	U	InSh	IS	Ornt	Overhang Len	Hgt	Window Area(sqft) Gross	Shaded	Unshaded	HTM Shaded	Unshaded	Load
3	1 NFRC	0.50	1.30	No	No	SE	2.0ft	1.4ft	18.0	13.6	4.4	59	83	1167 Btuh
4	1 NFRC	0.50	1.30	No	No	SE	2.0ft	1.1ft	40.0	15.6	24.4	59	83	2942 Btuh
5	1 NFRC	0.50	1.30	No	No	SE	2.0ft	1.4ft	5.2	5.2	0.0	59	83	309 Btuh
6	2 NFRC	0.45	1.20	No	No	NW	10.0f	1.4ft	18.0	0.0	18.0	54	75	1358 Btuh
7	1 NFRC	0.45	1.20	No	No	NW	10.0f	1.4ft	6.0	0.0	6.0	54	75	453 Btuh
8	1 NFRC	0.45	1.20	No	No	NW	10.0f	1.4ft	9.0	0.0	9.0	54	75	679 Btuh
9	1 NFRC	0.50	1.30	No	No	SW	10.0f	1.4ft	40.0	40.0	0.0	59	83	2357 Btuh
10	1 NFRC	0.45	1.20	No	No	NW	2.0ft	1.4ft	18.0	0.0	18.0	54	75	1358 Btuh
11	1 NFRC	0.45	1.20	No	No	NW	2.0ft	1.4ft	24.0	0.0	24.0	54	75	1810 Btuh
	Window Total								178 (sqft)					12433 Btuh

Walls	Type	U-Value	R-Value Cav/Sheath	Area(sqft)	HTM	Load
5	Concrete Blk,Hollow - Ext	0.18	3.0/0.0	240.1	7.4	1770 Btuh
6	Concrete Blk,Hollow - Ext	0.18	3.0/0.0	43.6	7.4	321 Btuh
7	Concrete Blk,Hollow - Ext	0.18	3.0/0.0	114.5	7.4	845 Btuh
8	Concrete Blk,Hollow - Ext	0.18	3.0/0.0	43.6	7.4	321 Btuh
9	Concrete Blk,Hollow - Ext	0.18	3.0/0.0	43.6	7.4	321 Btuh
10	Concrete Blk,Hollow - Ext	0.18	3.0/0.0	118.4	7.4	873 Btuh
11	Concrete Blk,Hollow - Ext	0.18	3.0/0.0	186.1	7.4	1373 Btuh
12	Concrete Blk,Hollow - Ext	0.18	3.0/0.0	102.2	7.4	754 Btuh
13	Concrete Blk,Hollow - Ext	0.18	3.0/0.0	230.2	7.4	1698 Btuh
	Wall Total			1122 (sqft)		8276 Btuh

Ceilings	Type/Color/Surface	U-Value	R-Value	Area(sqft)	HTM	Load
1	Vented Attic/Light/Shingle	0.049	19.0/0.0	1544.0	3.24	4995 Btuh
	Ceiling Total			1544 (sqft)		4995 Btuh

Floors	Type	R-Value	Size	HTM	Load
1	Slab On Grade	0.0	1544 (ft-perimeter)	0.0	0 Btuh
	Floor Total		1544.0 (sqft)		0 Btuh
				Zone Envelope Subtotal:	25704 Btuh

Infiltration	Type	Wholehouse ACH	Volume(cuft)	Wall Ratio	CFM=	Load
	Natural	0.13	12661	0.73	24.2	985 Btuh

Internal gain	Occupants	Btuh/occupant		Appliance	Load
	3	X 230	+	4600	5290 Btuh
			Sensible Envelope Load:		31978 Btuh
Duct load	Extremely sealed, Supply(R6.0-Attic), Return(R6.0-Cond.)			(DGM of 0.091)	2921 Btuh
				Sensible Zone Load	**34899 Btuh**

Manual J Summer Calculations

Residential Load - Component Details (continued)

Ambar Preval
200 N. Esplanade Drive
Miami Springs, FL 33166

Project Title:
200 Preval Project

Climate:FL_MIAMI_INTL_AP

12/1/2021

Component Loads for Room #2: NewSpace2

Window	Type*					Overhang		Window Area(sqft)			HTM		Load
	Panes	SHGC	U	InSh	IS Ornt	Len	Hgt	Gross	Shaded	Unshaded	Shaded	Unshaded	
1	1 NFRC	0.45,	1.20	No	No NE	2.0ft	1.2ft	18.4	0.0	18.4	54	75	1388 Btuh
2	1 NFRC	0.50,	1.30	No	No SE	2.0ft	1.1ft	18.4	11.5	7.0	59	83	1251 Btuh
	Window Total							37 (sqft)					2639 Btuh

Walls	Type	U-Value	R-Value Cav/Sheath	Area(sqft)	HTM	Load
1	Concrete Blk,Hollow - Ext	0.15	4.1/0.0	11.6	6.2	71 Btuh
2	Concrete Blk,Hollow - Ext	0.15	4.1/0.0	89.2	6.2	549 Btuh
3	Concrete Blk,Hollow - Ext	0.15	4.1/0.0	253.8	6.2	1564 Btuh
4	Concrete Blk,Hollow - Ext	0.15	4.1/0.0	70.8	6.2	436 Btuh
	Wall Total			425 (sqft)		2621 Btuh
Ceilings	Type/Color/Surface	U-Value	R-Value	Area(sqft)	HTM	Load
2	Vented Attic/Light/Shingle	0.032	30.0/0.0	363.0	2.10	763 Btuh
	Ceiling Total			363 (sqft)		763 Btuh
Floors	Type		R-Value	Size	HTM	Load
2	Slab On Grade		0.0	363 (ft-perimeter)	0.0	0 Btuh
	Floor Total			363.0 (sqft)		0 Btuh
				Zone Envelope Subtotal:		6023 Btuh

Infiltration	Type	Wholehouse ACH	Volume(cuft)	Wall Ratio	CFM=	Load
	Natural	0.13	2977	0.27	9.2	373 Btuh
Internal gain		Occupants	Btuh/occupant		Appliance	Load
		2	X 230	+	2400	2860 Btuh
				Sensible Envelope Load:		9256 Btuh
Duct load	Extremely sealed, Supply(R6.0-Attic), Return(R6.0-Cond.)				(DGM of 0.091)	845 Btuh
					Sensible Zone Load	**10102 Btuh**

Manual J Summer Calculations

Residential Load - Component Details (continued)

Ambar Preval
200 N. Esplanade Drive
Miami Springs, FL 33166

Project Title:
200 Preval Project

Climate:FL_MIAMI_INTL_AP

12/1/2021

WHOLE HOUSE TOTALS

	Sensible Envelope Load All Zones	**41235 Btuh**
	Sensible Duct Load	3766 Btuh
	Total Sensible Zone Loads	**45001 Btuh**
	Sensible ventilation	0 Btuh
	Blower	0 Btuh
Whole House	**Total sensible gain**	**45001 Btuh**
Totals for Cooling	Latent infiltration gain (for 57 gr. humidity difference)	1293 Btuh
	Latent ventilation gain	0 Btuh
	Latent duct gain	447 Btuh
	Latent occupant gain (5.0 people @ 200 Btuh per person)	1000 Btuh
	Latent other gain	3300 Btuh
	Latent total gain	**6040 Btuh**
	TOTAL GAIN	**51040 Btuh**

EQUIPMENT

1. Central Unit	#	57000 Btuh

*Key: Window types (Panes - Number and type of panes of glass)
(SHGC - Shading coefficient of glass as SHGC numerical value)
(U - Window U-Factor)
(InSh - Interior shading device: none(No), Blinds(B), Draperies(D) or Roller Shades(R))
- For Blinds: Assume medium color, half closed
For Draperies: Assume medium weave, half closed
For Roller shades: Assume translucent, half closed
(IS - Insect screen: none(N), Full(F) or Half(½))
(Ornt - compass orientation)

Powered by ACCA MANUAL J8

Version 8

System Sizing Calculations - Winter

Residential Load - Room by Room Component Details

Ambar Preval
200 N. Esplanade Drive
Miami Springs, FL 33166

Project Title:
200 Preval Project
Building Type: User

12/1/2021

Reference City: Miami, FL (Defaults) Winter Temperature Difference: 18.0 F (MJ8 99%)

Component Loads for Room #1: Main

Window	Panes/Type	Frame	U	Orientation	Area(sqft) X	HTM=	Load
3	1, NFRC 0.50	Metal	1.30	SE	18.0	23.4	421 Btuh
4	1, NFRC 0.50	Metal	1.30	SE	40.0	23.4	936 Btuh
5	1, NFRC 0.50	Metal	1.30	SE	5.2	23.4	123 Btuh
6	2, NFRC 0.45	Metal	1.20	NW	18.0	21.6	389 Btuh
7	1, NFRC 0.45	Metal	1.20	NW	6.0	21.6	130 Btuh
8	1, NFRC 0.45	Metal	1.20	NW	9.0	21.6	194 Btuh
9	1, NFRC 0.50	Metal	1.30	SW	40.0	23.4	936 Btuh
10	1, NFRC 0.45	Metal	1.20	NW	18.0	21.6	389 Btuh
11	1, NFRC 0.45	Metal	1.20	NW	24.0	21.6	518 Btuh
	Window Total				178.2(sqft)		4036 Btuh

Walls	Type	Ornt.	Ueff.	R-Value (Cav/Sh)	Area X	HTM=	Load
5	Conc Blk,Hollow	- Ext	(0.179)	3.0/0.0	240	3.21	772 Btuh
6	Conc Blk,Hollow	- Ext	(0.179)	3.0/0.0	44	3.21	140 Btuh
7	Conc Blk,Hollow	- Ext	(0.179)	3.0/0.0	115	3.21	368 Btuh
8	Conc Blk,Hollow	- Ext	(0.179)	3.0/0.0	44	3.21	140 Btuh
9	Conc Blk,Hollow	- Ext	(0.179)	3.0/0.0	44	3.21	140 Btuh
10	Conc Blk,Hollow	- Ext	(0.179)	3.0/0.0	118	3.21	381 Btuh
11	Conc Blk,Hollow	- Ext	(0.179)	3.0/0.0	186	3.21	598 Btuh
12	Conc Blk,Hollow	- Ext	(0.179)	3.0/0.0	102	3.21	329 Btuh
13	Conc Blk,Hollow	- Ext	(0.179)	3.0/0.0	230	3.21	740 Btuh
	Wall Total				1122(sqft)		3607 Btuh

Ceilings	Type/Color/Surface	Ueff.	R-Value	Area X	HTM=	Load
1	Vented Attic/L/Shing	(0.049)	19.0/0.0	1544	0.9	1362 Btuh
	Ceiling Total			1544(sqft)		1362Btuh

Floors	Type	Ueff.	R-Value	Size X	HTM=	Load
1	Slab On Grade	(1.180)	0.0	163.0 ft(perim.)	21.2	3462 Btuh
	Floor Total			1544 sqft		3462 Btuh

	Room Envelope Subtotal:	12467 Btuh

Infiltration	Type	Wholehouse ACH	Room Volume	Wall Ratio	CFM=	
	Natural	0.17	12661	0.73	32.3	639 Btuh

Duct load	Extremely sealed, Supply(R6.0-Attic), Return(R6.0-Cond.)	(DLM of 0.170)	2226 Btuh

Room #1	**Sensible Room Subtotal**	**15332 Btuh**

Manual J Winter Calculations

Residential Load - Component Details (continued)

Ambar Preval
200 N. Esplanade Drive
Miami Springs, FL 33166

Project Title:
200 Preval Project
Building Type: User

12/1/2021

Component Loads for Room #2: NewSpace2

Window	Panes/Type	Frame	U	Orientation	Area(sqft) X	HTM=	Load
1	1, NFRC 0.45	Metal	1.20	NE	18.4	21.6	398 Btuh
2	1, NFRC 0.50	Metal	1.30	SE	18.4	23.4	431 Btuh
	Window Total				36.8(sqft)		828 Btuh
Walls	Type	Ornt.	Ueff.	R-Value (Cav/Sh)	Area X	HTM=	Load
1	Conc Blk,Hollow	- Ext	(0.149)	4.1/0.0	12	2.69	31 Btuh
2	Conc Blk,Hollow	- Ext	(0.149)	4.1/0.0	89	2.69	239 Btuh
3	Conc Blk,Hollow	- Ext	(0.149)	4.1/0.0	254	2.69	682 Btuh
4	Conc Blk,Hollow	- Ext	(0.149)	4.1/0.0	71	2.69	190 Btuh
	Wall Total				425(sqft)		1142 Btuh
Ceilings	Type/Color/Surface		Ueff.	R-Value	Area X	HTM=	Load
2	Vented Attic/L/Shing		(0.032)	30.0/0.0	363	0.6	208 Btuh
	Ceiling Total				363(sqft)		208Btuh
Floors	Type		Ueff.	R-Value	Size X	HTM=	Load
2	Slab On Grade		(1.180)	0.0	56.5 ft(perim.)	21.2	1200 Btuh
	Floor Total				363 sqft		1200 Btuh
					Room Envelope Subtotal:		3379 Btuh
Infiltration	Type	Wholehouse	ACH	Room Volume	Wall Ratio	CFM=	
	Natural		0.17	2977	0.27	12.2	242 Btuh
Duct load	Extremely sealed, Supply(R6.0-Attic), Return(R6.0-Cond.)					(DLM of 0.170)	615 Btuh
Room #2				**Sensible Room Subtotal**			**4236 Btuh**

WHOLE HOUSE TOTALS

Totals for Heating	Subtotal Sensible Heat Loss	19568 Btuh
	Ventilation Sensible Heat Loss	0 Btuh
	Total Heat Loss	19568 Btuh

Manual J Winter Calculations

Residential Load - Component Details (continued)

Ambar Preval
200 N. Esplanade Drive
Miami Springs, FL 33166

Project Title:
200 Preval Project
Building Type: User

12/1/2021

EQUIPMENT		
1. Electric Strip Heat		34000 Btuh

Key: Window types - NFRC (Requires U-Factor and Shading coefficient(SHGC) of glass as numerical values)
or - Glass as 'Clear' or 'Tint' (Uses U-Factor and SHGC defaults)
U - (Window U-Factor)
HTM - (ManualJ Heat Transfer Multiplier)

Powered by ACCA MANUAL J8

Version 8

RESIDENTIAL ENERGY CONSERVATION CODE DOCUMENTATION CHECKLIST

Florida Department of Business and Professional Regulation
Simulated Performance Alternative (Performance) Method

Applications for compliance with the 2020 Florida Building Code, Energy Conservation via the Residential Simulated Performance Alternative shall include:

- ☑ *This checklist*
- ☑ *Form R405-2020 report*
- ☑ *Input summary checklist that can be used for field verification (usually four pages/may be greater)*
- ☑ *Energy Performance Level (EPL) Display Card (one page)*
- ☑ *HVAC system sizing and selection based on ACCA Manual S or per exceptions provided in Section R403.7*
- ☑ *Mandatory Requirements (five pages)*

Required prior to CO:

- ☐ *Air Barrier and Insulation Inspection Component Criteria checklist (Table R402.4.1.1 - one page)*
- ☐ *A completed 2020 Envelope Leakage Test Report (usually one page); exception in R402.4 allows dwelling units of R-2 Occupancies and multiple attached single family dwellings to comply with Section C402.5*
  Testing is not required for additions in which the new construction is less than 85% of the thermal envelope. (R402.4.1.2, Florida Energy Code)
- ☐ *If Form R405 duct leakage type indicates anything other than "default leakage", then a completed 2020 Duct Leakage Test Report - Performance Method (usually one page)*

Envelope Leakage Test Report (Blower Door Test)
Residential Prescriptive, Performance or ERI Method Compliance
2020 Florida Building Code, Energy Conservation, 7th Edition

Jurisdiction: 232700	Permit #:

Job Information

Builder:	Community:	Lot: NA
Address: 200 N. Esplanade Drive		
City: Miami Springs	State: FL	Zip: 33166

Air Leakage Test Results *Passing results must meet either the Performance, Prescriptive, or ERI Method*

○ **PRESCRIPTIVE METHOD-**The building or dwelling unit shall be tested and verified as having an air leakage rate of not exceeding 7 air changes per hour at a pressure of 0.2 inch w.g. (50 Pascals) in Climate Zones 1 and 2.

○ **PERFORMANCE or ERI METHOD-**The building or dwelling unit shall be tested and verified as having an air leakage rate of not exceeding the selected ACH(50) value, as shown on Form R405-2020 (Performance) or R406-2020 (ERI), section labeled as infiltration, sub-section ACH50.

ACH(50) specified on Form R405-2020-Energy Calc (Performance) or R406-2020 (ERI): 5.000

_____ (CFM(50)) x 60 ÷ 15637 (Building Volume) = _____ (ACH(50))

☐ **PASS**

☐ When ACH(50) is less than 3, Mechanical Ventilation installation must be verified by building department.

Method for calculating building volume:

○ Retrieved from architectural plans

● Code software calculated

○ Field measured and calculated

R402.4.1.2 Testing. Testing shall be conducted in accordance with ANSI/RESNET/ICC 380 and reported at a pressure of 0.2 inch w.g. (50 Pascals). Testing shall be conducted by either individuals as defined in Section 553.993(5) or (7), *Florida Statues.*or individuals licensed as set forth in Section 489.105(3)(f), (g), or (i) or an approved third party. A written report of the results of the test shall be signed by the party conducting the test and provided to the*code official*. Testing shall be performed at any time after creation of all penetrations of the *building thermal envelope.*

During testing:
1. Exterior windows and doors, fireplace and stove doors shall be closed, but not sealed, beyond the intended weatherstripping or other infiltration control measures.
2. Dampers including exhaust, intake, makeup air, back draft and flue dampers shall be closed, but not sealed beyond intended infiltration control measures.
3. Interior doors, if installed at the time of the test, shall be open.
4. Exterior doors for continuous ventilation systems and heat recovery ventilators shall be closed and sealed.
5. Heating and cooling systems, if installed at the time of the test, shall be turned off.
6. Supply and return registers, if installed at the time of the test, shall be fully open.

Testing Company

Company Name: _____ Phone: _____

I hereby verify that the above Air Leakage results are in accordance with the 2020 7th Edition Florida Building Code Energy Conservation requirements according to the compliance method selected above.

Signature of Tester: _____ Date of Test: _____

Printed Name of Tester: _____

License/Certification #: _____ Issuing Authority: _____

Duct Leakage Test Report

Residential Prescriptive, Performance or ERI Method Compliance
2020 Florida Building Code, Energy Conservation, 7th Edition

Jurisdiction: 232700	Permit #:

Job Information

Builder:	Community:	Lot: NA
Address: 200 N. Esplanade Drive		
City: Miami Springs	State: FL	Zip: 33166

Duct Leakage Test Results

System 1	_____	cfm25
System 2	_____	cfm25
System 3	_____	cfm25
Sum of others	_____	cfm25
Total of all	_____	cfm25

_____ (Total of all systems) ÷ 1907 (Total Conditioned Square Footage) = _____ Qn

☐ **PASS** ☐ **FAIL**

○ **Prescriptive Method** cfm25 (Total)

To qualify as "substantially leak free" Qn Total must be less than or equal to 0.04 if air handler unit is installed. If air handler unit is not installed, Qn Total must be less than or equal to 0.03. This testing method meets the requirements in accordance with Section R403.3.3.

Is the air handler unit installed during testing? ☐ YES ($\leq \frac{.04}{Qn}$) ☐ NO ($\leq \frac{.03}{Qn}$)

○ **Performance/ERI Method** cfm25 (Out or Total)

To qualify using this method, Qn must not be greater than the proposed duct leakage Qn specified on Form R405-2020 or R406-2020.

Leakage Type selected on Form R405-2020 (EnergyCalc) or R406-2020	*Qn specified on Form R405-2020 (EnergyCalc) or R406-2020*
Proposed Leak Free	0.03

Duct tightness shall be verified by testing in accordance with ANSI/RESNET/ICC380 by either individuals as defined in Section 553.993(5) or (7), Florida Statutes, or individuals licensed as set forth in Section 489.105(3)(f), (g) or (i), Florida Statutes.

Testing Company

Company Name: _____ Phone: _____

I hereby verify that the above duct leakage testing results are in accordance with the Florida Building Code requirements with the selected compliance path as stated above, either the Prescriptive Method or Performance Method.

Signature of Tester: _____ Date of Test: _____

Printed Name of Tester: _____

License/Certification #: _____ Issuing Authority: _____

Florida Building Code, Energy Conservation, 7th Edition (2020)
Mandatory Requirements for Residential Performance, Prescriptive and ERI Methods

ADDRESS:	200 N. Esplanade Drive Miami Springs , FL , 33166	Permit Number:

MANDATORY REQUIREMENTS - See individual code sections for full details.

SECTION R401 GENERAL

☑ **R401.3 Energy Performance Level (EPL) display card (Mandatory).** The building official shall require that an energy performance level (EPL) display card be completed and certified by the builder to be accurate and correct before final approval of the building for occupancy. Florida law (Section 553.9085, Florida Statutes) requires the EPL display card to be included as an addendum to each sales contract for both presold and nonpresold residential buildings. The EPL display card contains information indicating the energy performance level and efficiencies of components installed in a dwelling unit. The building official shall verify that the EPL display card completed and signed by the builder accurately reflects the plans and specifications submitted to demonstrate code compliance for the building. A copy of the EPL display card can be found in Appendix RD.

SECTION R402 BUILDING THERMAL ENVELOPE

☑ **R402.4 Air leakage (Mandatory).** The building thermal envelope shall be constructed to limit air leakage in accordance with the requirements of Sections R402.4.1 through R402.4.5.

Exception: Dwelling units of R-2 Occupancies and multiple attached single family dwellings shall be permitted to comply with Section C402.5.

☐ **R402.4.1 Building thermal envelope.**The building thermal envelope shall comply with Sections R402.4.1.1 and R402.4.1.2. The sealing methods between dissimilar materials shall allow for differential expansion and contraction.

☐ **R402.4.1.1 Installation.** The components of the building thermal envelope as listed in Table R402.4.1.1 shall be installed in accordance with the manufacturer's instructions and the criteria listed in Table R402.4.1.1, as applicable to the method of construction. Where required by the code official, an approved third party shall inspect all components and verify compliance.

☐ **R402.4.1.2 Testing.** The building or dwelling unit shall be tested and verified as having an air leakage rate not exceeding seven air changes per hour in Climate Zones 1 and 2, and three air changes per hour in Climate Zones 3 through 8. Testing shall be conducted in accordance with ANSI/RESNET/ICC 380 and reported at a pressure of 0.2 inch w.g. (50 pascals). Testing shall be conducted by either individuals as defined in Section 553.993(5) or (7), Florida Statutes, or individuals licensed as set forth in Section 489.105(3)(f), (g) or (i) or an approved third party. A written report of the results of the test shall be signed by the party conducting the test and provided to the code official. Testing shall be performed at any time after creation of all penetrations of the building thermal envelope.

Exception: Testing is not required for additions, alterations, renovations, or repairs, of the building thermal envelope of existing buildings in which the new construction is less than 85 percent of the building thermal envelope.

During testing:
1. Exterior windows and doors, fireplace and stove doors shall be closed, but not sealed, beyond the intended weatherstripping or other infiltration control measures.
2. Dampers including exhaust, intake, makeup air, backdraft and flue dampers shall be closed, but not sealed beyond intended infiltration control measures.
3. Interior doors, if installed at the time of the test, shall be open.
4. Exterior doors for continuous ventilation systems and heat recovery ventilators shall be closed and sealed.
5. Heating and cooling systems, if installed at the time of the test, shall be turned off.
6. Supply and return registers, if installed at the time of the test, shall be fully open.

☐ **R402.4.2 Fireplaces.** New wood-burning fireplaces shall have tight-fitting flue dampers or doors, and outdoor combustion air. Where using tight-fitting doors on factory-built fireplaces listed and labeled in accordance with UL 127, the doors shall be tested and listed for the fireplace. Where using tight-fitting doors on masonry fireplaces, the doors shall be listed and labeled in accordance with UL 907.

☑ **R402.4.3 Fenestration air leakage.** Windows, skylights and sliding glass doors shall have an air infiltration rate of no more than 0.3 cfm per square foot (1.5 L/s/m2), and swinging doors no more than 0.5 cfm per square foot (2.6 L/s/m2), when tested according to NFRC 400 or AAMA/ WDMA/CSA 101/I.S.2/A440 by an accredited, independent laboratory and listed and labeled by the manufacturer.

Exception: Site-built windows, skylights and doors.

MANDATORY REQUIREMENTS - (Continued)

☐ **R402.4.4 Rooms containing fuel-burning appliances.** In Climate Zones 3 through 8, where open combustion air ducts provide combustion air to open combustion fuel burning appliances, the appliances and combustion air opening shall be located outside the building thermal envelope or enclosed in a room, isolated from inside the thermal envelope. Such rooms shall be sealed and insulated in accordance with the envelope requirements of Table R402.1.2, where the walls, floors and ceilings shall meet not less than the basement wall R-value requirement. The door into the room shall be fully gasketed and any water lines and ducts in the room insulated in accordance with Section R403. The combustion air duct shall be insulated where it passes through conditioned space to a minimum of R-8.

Exceptions:

1. Direct vent appliances with both intake and exhaust pipes installed continuous to the outside.
2. Fireplaces and stoves complying with Section R402.4.2 and Section R1006 of the Florida Building Code, Residential.

☑ **R402.4.5 Recessed lighting.** Recessed luminaires installed in the building thermal envelope shall be sealed to limit air leakage between conditioned and unconditioned spaces. All recessed luminaires shall be IC-rated and labeled as having an air leakage rate not more than 2.0 cfm (0.944 L/s) when tested in accordance with ASTM E283 at a 1.57 psf (75 Pa) pressure differential. All recessed luminaires shall be sealed with a gasket or caulk between the housing and the interior wall or ceiling covering.

SECTION R403 SYSTEMS

R403.1 Controls.

☑ **R403.1.1 Thermostat provision (Mandatory).** At least one thermostat shall be provided for each separate heating and cooling system.

☐ **R403.1.3 Heat pump supplementary heat (Mandatory).** Heat pumps having supplementary electric-resistance heat shall have controls that, except during defrost, prevent supplemental heat operation when the heat pump compressor can meet the heating load.

☑ **R403.3.2 Sealing (Mandatory)** All ducts, air handlers, filter boxes and building cavities that form the primary air containment passageways for air distribution systems shall be considered ducts or plenum chambers, shall be constructed and sealed in accordance with Section C403.2.9.2 of the Commercial Provisions of this code and shall be shown to meet duct tightness criteria below.

Duct tightness shall be verified by testing in accordance with ANSI/RESNET/ICC 380 by either individuals as defined in Section 553.993(5) or (7), Florida Statutes, or individuals licensed as set forth in Section 489.105(3)(f), (g) or (i), Florida Statutes, to be "substantially leak free" in accordance with Section R403.3.3.

☑ **R403.3.2.1 Sealed air handler.** Air handlers shall have a manufacturer's designation for an air leakage of no more than 2 percent of the design airflow rate when tested in accordance with ASHRAE 193.

☐ **R403.3.3 Duct testing (Mandatory).** Ducts shall be pressure tested to determine air leakage by one of the following methods:

1. Rough-in test: Total leakage shall be measured with a pressure differential of 0.1 inch w.g. (25 Pa) across the system, including the manufacturer's air handler enclosure if installed at the time of the test. All registers shall be taped or otherwise sealed during the test.
2. Postconstruction test: Total leakage shall be measured with a pressure differential of 0.1 inch w.g. (25 Pa) across the entire system, including the manufacturer's air handler enclosure. Registers shall be taped or otherwise sealed during the test.

Exceptions:

1. A duct air leakage test shall not be required where the ducts and air handlers are located entirely within the building thermal envelope.
2. *Duct testing is not mandatory for buildings complying by Section 405 of this code. Duct leakage testing is required for Section R405 compliance where credit is taken for leakage, and a duct air leakage Qn to the outside of less than 0.080 (where Qn = duct leakage to the outside in cfm per 100 square feet of conditioned floor area tested at 25 Pascals) is indicated in the compliance report for the proposed design.*

A written report of the results of the test shall be signed by the party conducting the test and provided to the code official.

☐ **R403.3.5 Building cavities (Mandatory).** Building framing cavities shall not be used as ducts or plenums.

☑ **R403.4 Mechanical system piping insulation (Mandatory).** Mechanical system piping capable of carrying fluids above 105°F (41°C) or below 55°F (13°C) shall be insulated to a minimum of R-3.

☑ **R403.4.1 Protection of piping insulation.** Piping insulation exposed to weather shall be protected from damage, including that caused by sunlight, moisture, equipment maintenance and wind, and shall provide shielding from solar radiation that can cause degradation of the material. Adhesive tape shall not be permitted.

☐ **R403.5.1 Heated water circulation and temperature maintenance systems (Mandatory).** If heated water circulation systems are installed, they shall be in accordance with Section R403.5.1.1. Heat trace temperature maintenance systems shall be in accordance with Section R403.5.1.2. Automatic controls, temperature sensors and pumps shall be accessible. Manual controls shall be readily accessible.

☐ **R403.5.1.1 Circulation systems.** Heated water circulation systems shall be provided with a circulation pump. The system return pipe shall be a dedicated return pipe or a cold water supply pipe. Gravity and thermosiphon circulation systems shall be prohibited. Controls for circulating hot water system pumps shall start the pump based on the identification of a demand for hot water within the occupancy. The controls shall automatically turn off the pump when the water in the circulation loop is at the desired temperature and when there is no demand for hot water.

☐ **R403.5.1.2 Heat trace systems.** Electric heat trace systems shall comply with IEEE 515.1 or UL 515. Controls for such systems shall automatically adjust the energy input to the heat tracing to maintain the desired water temperature in the piping in accordance with the times when heated water is used in the occupancy.

MANDATORY REQUIREMENTS - (Continued)

☐ **R403.5.5 Heat traps (Mandatory).** Storage water heaters not equipped with integral heat traps and having vertical pipe risers shall have heat traps installed on both the inlets and outlets. External heat traps shall consist of either a commercially available heat trap or a downward and upward bend of at least 3 ½ inches (89 mm) in the hot water distribution line and cold water line located as close as possible to the storage tank.

R403.5.6 Water heater efficiencies (Mandatory).

☑ **R403.5.6.1.1 Automatic controls.** Service water-heating systems shall be equipped with automatic temperature controls capable of adjustment from the lowest to the highest acceptable temperature settings for the intended use. The minimum temperature setting range shall be from 100°F to 140°F (38°C to 60°C).

☑ **R403.5.6.1.2 Shut down.** A separate switch or a clearly marked circuit breaker shall be provided to permit the power supplied to electric service systems to be turned off. A separate valve shall be provided to permit the energy supplied to the main burner(s) of combustion types of service water-heating systems to be turned off.

☑ **R403.5.6.2 Water-heating equipment.** Water-heating equipment installed in residential units shall meet the minimum efficiencies of Table C404.2 in Chapter 4 of the Florida Building Code, Energy Conservation, Commercial Provisions, for the type of equipment installed. Equipment used to provide heating functions as part of a combination system shall satisfy all stated requirements for the appropriate water-heating category. Solar water heaters shall meet the criteria of Section R403.5.6.2.1.

☐ **R403.5.6.2.1 Solar water-heating systems.** Solar systems for domestic hot water production are rated by the annual solar energy factor of the system. The solar energy factor of a system shall be determined from the Florida Solar Energy Center Directory of Certified Solar Systems. Solar collectors shall be tested in accordance with ISO Standard 9806, Test Methods for Solar Collectors, and SRCC Standard TM-1, Solar Domestic Hot Water System and Component Test Protocol. Collectors in installed solar water-heating systems should meet the following criteria:

1. Be installed with a tilt angle between 10 degrees and 40 degrees of the horizontal; and
2. Be installed at an orientation within 45 degrees of true south.

☑ **R403.6 Mechanical ventilation (Mandatory).** The building shall be provided with ventilation that meets the requirements of the Florida Building Code, Residential, or Florida Building Code, Mechanical, as applicable, or with other approved means of ventilation including: Natural, Infiltration or Mechanical means. Outdoor air intakes and exhausts shall have automatic or gravity dampers that close when the ventilation system is not operating.

☐ **R403.6.1 Whole-house mechanical ventilation system fan efficacy.** When installed to function as a whole-house mechanical ventilation system, fans shall meet the efficacy requirements of Table R403.6.1.

Exception: Where an air handler that is integral to tested and listed HVAC equipment is used to provide whole-house mechanical ventilation, the air handler shall be powered by an electronically commutated motor.

☑ **R403.6.2 Ventilation air.** Residential buildings designed to be operated at a positive indoor pressure or for mechanical ventilation shall meet the following criteria:

1. The design air change per hour minimums for residential buildings in ASHRAE 62.2, Ventilation for Acceptable Indoor Air Quality, shall be the maximum rates allowed for residential applications.
2. No ventilation or air-conditioning system make-up air shall be provided to conditioned space from attics, crawlspaces, attached enclosed garages or outdoor spaces adjacent to swimming pools or spas.
3. If ventilation air is drawn from enclosed space(s), then the walls of the space(s) from which air is drawn shall be insulated to a minimum of R-11 and the ceiling shall be insulated to a minimum of R-19, space permitting, or R-10 otherwise.

R403.7 Heating and cooling equipment.

☑ **R403.7.1 Equipment sizing (Mandatory).** Heating and cooling equipment shall be sized in accordance with ACCA Manual S based on the equipment loads calculated in accordance with ACCA Manual J or other approved heating and cooling calculation methodologies, based on building loads for the directional orientation of the building. The manufacturer and model number of the outdoor and indoor units (if split system) shall be submitted along with the sensible and total cooling capacities at the design conditions described in Section R302.1. This Code does not allow designer safety factors, provisions for future expansion or other factors that affect equipment sizing. System sizing calculations shall not include loads created by local intermittent mechanical ventilation such as standard kitchen and bathroom exhaust systems. New or replacement heating and cooling equipment shall have an efficiency rating equal to or greater than the minimum required by federal law for the geographic location where the equipment is installed.

TABLE R403.6.1
WHOLE-HOUSE MECHANICAL VENTILATION SYSTEM FAN EFFICACY

FAN LOCATION	AIRFLOW RATE MINIMUM (CFM)	MINIMUM EFFICACY [a] (CFM/WATT)	AIRFLOW RATE MAXIMUM (CFM)
HRV or ERV	Any	1.2 cfm/watt	Any
Range hoods	Any	2.8 cfm/watt	Any
In-line fan	Any	2.8 cfm/watt	Any
Bathroom, utility room	10	1.4 cfm/watt	<90
Bathroom, utility room	90	2.8 cfm/watt	Any

For SI: 1 cfm = 28.3 L/min. a. When tested in accordance with HVI Standard 916

MANDATORY REQUIREMENTS - (Continued)

☑ **R403.7.1.1 Cooling equipment capacity.** Cooling only equipment shall be selected so that its total capacity is not less than the calculated total load but not more than 1.15 times greater than the total load calculated according to the procedure selected in Section R403.7, or the closest available size provided by the manufacturer's product lines. The corresponding latent capacity of the equipment shall not be less than the calculated latent load.
The published value for AHRI total capacity is a nominal, rating-test value and shall not be used for equipment sizing. Manufacturer's expanded performance data shall be used to select cooling-only equipment. This selection shall be based on the outdoor design dry-bulb temperature for the load calculation (or entering water temperature for water-source equipment), the blower CFM provided by the expanded performance data, the design value for entering wet-bulb temperature and the design value for entering dry-bulb temperature.

Design values for entering wet-bulb and dry-bulb temperatures shall be for the indoor dry bulb and relative humidity used for the load calculation and shall be adjusted for return side gains if the return duct(s) is installed in an unconditioned space.

Exceptions:

1. Attached single- and multiple-family residential equipment sizing may be selected so that its cooling capacity is less than the calculated total sensible load but not less than 80 percent of that load.
2. When signed and sealed by a Florida-registered engineer, in attached single- and multiple-family units, the capacity of equipment may be sized in accordance with good design practice.

R403.7.1.2 Heating equipment capacity.

☐ **R403.7.1.2.1 Heat pumps.** Heat pump sizing shall be based on the cooling requirements as calculated according to Section R403.7.1.1, and the heat pump total cooling capacity shall not be more than 1.15 times greater than the design cooling load even if the design heating load is 1.15 times greater than the design cooling load.

☑ **R403.7.1.2.2 Electric resistance furnaces.** Electric resistance furnaces shall be sized within 4 kW of the design requirements calculated according to the procedure selected in Section R403.7.1.

☐ **R403.7.1.2.3 Fossil fuel heating equipment.** The capacity of fossil fuel heating equipment with natural draft atmospheric burners shall not be less than the design load calculated in accordance with Section R403.7.1.

☑ **R403.7.1.3 Extra capacity required for special occasions.** Residences requiring excess cooling or heating equipment capacity on an intermittent basis, such as anticipated additional loads caused by major entertainment events, shall have equipment sized or controlled to prevent continuous space cooling or heating within that space by one or more of the following options:

1. A separate cooling or heating system is utilized to provide cooling or heating to the major entertainment areas.
2. A variable capacity system sized for optimum performance during base load periods is utilized.

☐ **R403.8 Systems serving multiple dwelling units (Mandatory).** Systems serving multiple dwelling units shall comply with Sections C403 and C404 of the Florida Building Code, Energy Conservation—Commercial Provisions in lieu of Section R403.

☐ **R403.9 Snow melt and ice system controls (Mandatory)** Snow- and ice-melting systems, supplied through energy service to the building, shall include automatic controls capable of shutting off the system when the pavement temperature is above 50°F (10°C), and no precipitation is falling and an automatic or manual control that will allow shutoff when the outdoor temperature is above 40°F (4.8°C).

☐ **R403.10 Pools and permanent spa energy consumption (Mandatory).** The energy consumption of pools and permanent spas shall be in accordance with Sections R403.10.1 through R403.10.5.

☑ **R403.10.1 Heaters.** The electric power to heaters shall be controlled by a readily accessible on-off switch that is an integral part of the heater mounted on the exterior of the heater, or external to and within 3 feet (914 mm) of the heater. Operation of such switch shall not change the setting of the heater thermostat. Such switches shall be in addition to a circuit breaker for the power to the heater. Gas-fired heaters shall not be equipped with continuously burning ignition pilots.

☐ **R403.10.2 Time switches.** Time switches or other control methods that can automatically turn off and on according to a preset schedule shall be installed for heaters and pump motors. Heaters and pump motors that have built-in time switches shall be in compliance with this section.

Exceptions:

1. Where public health standards require 24-hour pump operation.
2. Pumps that operate solar- and waste-heat-recovery pool heating systems.
3. Where pumps are powered exclusively from on-site renewable generation.

☐ **R403.10.3 Covers.** Outdoor heated swimming pools and outdoor permanent spas shall be equipped with a vapor-retardant cover on or at the water surface or a liquid cover or other means proven to reduce heat loss.

Exception: Where more than 70 percent of the energy for heating, computed over an operation season, is from site-recovered energy, such as from a heat pump or solar energy source, covers or other vapor-retardant means shall not be required.

☐ **R403.10.4 Gas- and oil-fired pool and spa heaters.** All gas- and oil-fired pool and spa heaters shall have a minimum thermal efficiency of 82 percent for heaters manufactured on or after April 16, 2013, when tested in accordance with ANSI Z 21.56. Pool heaters fired by natural or LP gas shall not have continuously burning pilot lights.

☐ **R403.10.5 Heat pump pool heaters.** Heat pump pool heaters shall have a minimum COP of 4.0 when tested in accordance with AHRI 1160, Table 2, Standard Rating Conditions-Low Air Temperature. A test report from an independent laboratory is required to verify procedure compliance. Geothermal swimming pool heat pumps are not required to meet this standard.

☐ **R403.11 Portable spas (Mandatory).** The energy consumption of electric-powered portable spas shall be controlled by the requirements of APSP-14.

☐ **R403.13 Dehumidifiers (Mandatory** If installed, a dehumidifier shall conform to the following requirements:

1. The minimum rated efficiency of the dehumidifier shall be greater than 1.7 liters/ kWh if the total dehumidifier capacity for the house is less than 75 pints/day and greater than 2.38 liters/kWh if the total dehumidifier capacity for the house is greater than or equal to 75 pints/day.
2. The dehumidifier shall be controlled by a sensor that is installed in a location where it is exposed to mixed house air.
3. Any dehumidifier unit located in unconditioned space that treats air from conditioned space shall be insulated to a minimum of R-2.
4. Condensate disposal shall be in accordance with Section M1411.3.1 of the Florida Building Code, Residential.

☐ **R403.13.1 Ducted dehumidifiers.** Ducted dehumidifiers shall, in addition to conforming to the requirements of Section R403.13, conform to the following requirements:

1. If a ducted dehumidifier is configured with return and supply ducts both connected into the supply side of the cooling system, a backdraft damper shall be installed in the supply air duct between the dehumidifier inlet and outlet duct.
2. If a ducted dehumidifier is configured with only its supply duct connected into the supply side of the central heating and cooling system, a backdraft damper shall be installed in the dehumidifier supply duct between the dehumidifier and central supply duct.
3. A ducted dehumidifier shall not be ducted to or from a central ducted cooling system on the return duct side upstream from the central cooling evaporator coil.
4. Ductwork associated with a dehumidifier located in unconditioned space shall be insulated to a minimum of R-6.

SECTION R404

ELECTRICAL POWER AND LIGHTING SYSTEMS

☑ **R404.1 Lighting equipment (Mandatory).** Not less than 90 percent of the lamps in permanently installed luminaires shall have an efficacy of at least 45 lumens-per-watt or shall utilize lamps with an efficacy of not less than 65 lumens-per-watt.

R404.1.1 Lighting equipment (Mandatory). Fuel gas lighting systems shall not have continuously burning pilot lights.

AHRI CERTIFIED®
www.ahridirectory.org

Eligible for Federal Tax Credit

Certificate of Product Ratings

AHRI Certified Reference Number : 201295251 Date : 11-26-2021 Model Status : Active

Old AHRI Reference Number : 7943715

AHRI Type : RCU-A-CB (Split System: Air-Cooled Condensing Unit, Coil with Blower)

Outdoor Unit Brand Name : RHEEM

Outdoor Unit Model Number (Condenser or Single Package) : RA1660AJ1

Indoor Unit Model Number (Evaporator and/or Air Handler) : RH1V6024STAN

Region : All (AK, AL, AR, AZ, CA, CO, CT, DC, DE, FL, GA, HI, ID, IL, IA, IN, KS, KY, LA, MA, MD, ME, MI, MN, MO, MS, MT, NC, ND, NE, NH, NJ, NM, NV, NY, OH, OK, OR, PA, RI, SC, SD, TN, TX, UT, VA, VT, WA, WV, WI, WY, U.S. Territories)

Region Note : Central air conditioners manufactured prior to January 1, 2015 are eligible to be installed in all regions until June 30, 2016. Beginning July 1, 2016 central air conditioners can only be installed in region(s) for which they meet the regional efficiency requirement.

The manufacturer of this RHEEM product is responsible for the rating of this system combination.

Rated as follows in accordance with the latest edition of AHRI 210/240 with Addendum 1, Performance Rating of Unitary Air-Conditioning & Air-Source Heat Pump Equipment and subject to rating accuracy by AHRI-sponsored, independent, third party testing:

Cooling Capacity (A2) - Single or High Stage (95F), btuh : 57000

SEER : 16.00

EER (A2) - Single or High Stage (95F) : 13.00

†"Active" Model Status are those that an AHRI Certification Program Participant is currently producing AND selling or offering for sale; OR new models that are being marketed but are not yet being produced."Production Stopped" Model Status are those that an AHRI Certification Program Participant is no longer producing BUT is still selling or offering for sale.
Ratings that are accompanied by WAS indicate an involuntary re-rate. The new published rating is shown along with the previous (i.e. WAS) rating.

DISCLAIMER
AHRI does not endorse the product(s) listed on this Certificate and makes no representations, warranties or guarantees as to, and assumes no responsibility for, the product(s) listed on this Certificate. AHRI expressly disclaims all liability for damages of any kind arising out of the use or performance of the product(s), or the unauthorized alteration of data listed on this Certificate. Certified ratings are valid only for models and configurations listed in the directory at www.ahridirectory.org.

TERMS AND CONDITIONS
This Certificate and its contents are proprietary products of AHRI. This Certificate shall only be used for individual, personal and confidential reference purposes. The contents of this Certificate may not, in whole or in part, be reproduced; copied; disseminated; entered into a computer database; or otherwise utilized, in any form or manner or by any means, except for the user's individual, personal and confidential reference.

CERTIFICATE VERIFICATION
The information for the model cited on this certificate can be verified at www.ahridirectory.org, click on "Verify Certificate" link and enter the AHRI Certified Reference Number and the date on which the certificate was issued, which is listed above, and the Certificate No., which is listed at bottom right.

AHRI
AIR-CONDITIONING, HEATING, & REFRIGERATION INSTITUTE
we make life better™

©2021 Air-Conditioning, Heating, and Refrigeration Institute

CERTIFICATE NO.: 132824067030211758

TABLE 3

NVBH 24 BUTTERFLY HANGER

SIZE	PRODUCT CODE	GAUGE	FASTENER SCHEDULE		ALLOWABLE LOADS (lbs.)
			HEADER 8d	JOIST 8d	DOWNWARD GRAVITY LOADS
2x4	NVBH24	18	12	6	1113

Notes:

1. Use all specified fasteners in schedule to achieve values indicated.
2. Values are based on $1\frac{1}{2}$" header and Joist thickness.
3. See General Notes, Sheet 1.

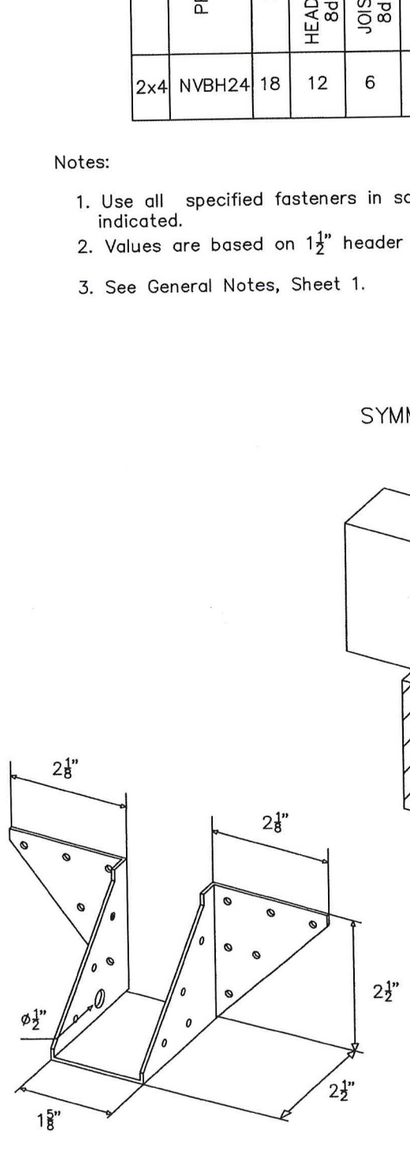

TABLE 4

NVUH 26 JOIST HANGER

SIZE	PRODUCT CODE	GAUGE	FASTENER SCHEDULE		ALLOWABLE LOADS (lbs.)	
			HEADER 16d	JOIST 10d x 1½"	DOWNWARD GRAVITY LOADS	WIND UPLIFT LOAD
2x6	NVUH26	14	20	10	2233	1213

Notes:

1. Use all specified fasteners in schedule to achieve values indicated.
2. Values are based on 3" header thickness and $1\frac{1}{2}$" Joist thickness.
3. See General Notes, Sheet 1.

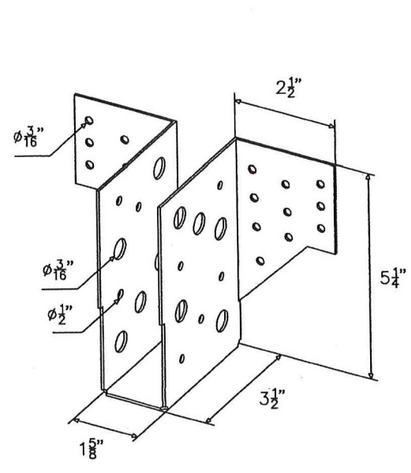

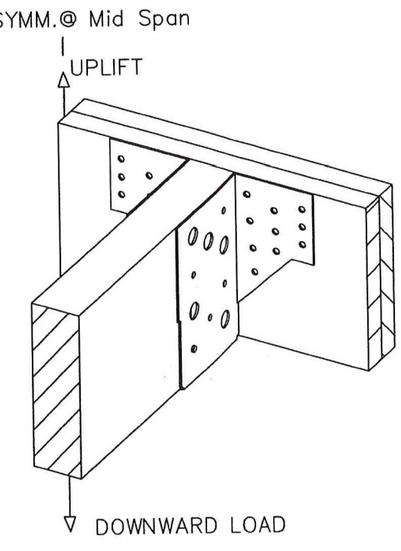

PRODUCT REVISED
as complying with the Florida Building Code
NOA-No. 20-0519.03
Expiration Date 07/30/2025
By
Miami-Dade Product Control

VIPIN N. TOLAT, PE (CIVIL)
FL. REG. # 12847
15123 LANTERN CREEK LANE
HOUSTON, TX 77068

5/7/2020

Nu-Vue Industries, Inc.
1053-1059 East 29 Street
Hialeah, Florida 33013
PHONE: (305) 694-0397
FAX: (305) 694-0398

NVBH 24 AND NVUH 26 HANGERS

DWG #:	Sheet:	Date:	
NU-2	2 of 4	May 5, 2020	

OFFICE COPY
CITY OF MIAMI SPRINGS

CITY OF MIAMI SPRINGS
BUILDING DEPARTMENT
DEC 10 2021
RECEIVED

TABLE 1

Truss Anchors NVTA and Riveted Truss Anchors with Seat NVTAS

H Length (in)	Product Code		Gauge seat	Gauge strap
16	NVTA–16	NVTAS 212	20	14
18	NVTA–18	NVTAS 214	20	14
20	NVTA–20	NVTAS 216	20	14
22	NVTA–22	NVTAS 218	20	14
24	NVTA–24	NVTAS 220	20	14
26	NVTA–26	NVTAS 222	20	14
28	NVTA–28	NVTAS 224	20	14
30	NVTA–30	NVTAS 226	20	14
36	NVTA–36	NVTAS 232	20	14
48	NVTA–48	NVTAS 244	20	14

No. of Fasteners each strap 10d	Maximum Allowable Load (lbs)			
	Uplift Single Strap	Uplift Double Straps	L1 Single & Double Straps	L2 Single & Double Straps
5	757	1514	250	500
6	805	1610	250	500
7	854	1708	250	500
8	902	*1804	250	500
9	951	*1902	250	500
10	999	*1998	250	500
11	1048	*2096	250	500
12	1096	*2192	250	500
13	1145	*2290	250	500
14	1193	*2290	250	500

*Note: For 8 or more nails per strap, use double truss for double straps.

PRODUCT REVISED
as complying with the Florida Building Code
NOA-No. 20-0519.03
Expiration Date 07/30/2025
By
Miami-Dade Product Control

TABLE 2

Truss Anchors NVTA and Riveted Truss Anchors with Seat NVTAS

H Length (in)	Product Code		Gauge seat	Gauge strap
16	NVTA–16	NVTAS 212	20	14
18	NVTA–18	NVTAS 214	20	14
20	NVTA–20	NVTAS 216	20	14
22	NVTA–22	NVTAS 218	20	14
24	NVTA–24	NVTAS 220	20	14
26	NVTA–26	NVTAS 222	20	14
28	NVTA–28	NVTAS 224	20	14
30	NVTA–30	NVTAS 226	20	14
36	NVTA–36	NVTAS 232	20	14
48	NVTA–48	NVTAS 244	20	14

No. of Fasteners each strap 10d x 1.5"	Maximum Allowable Load (lbs)			
	Uplift Single Strap	Uplift Double Straps	L1 Single & Double Straps	L2 Single & Double Straps
5	1032	2236	250	500
6	1127	2254	385	565
7	1136	2272	520	630
8	1144	*2288	520	630
9	1153	*2306	520	630
10	1161	*2322	520	630
11	1170	*2340	520	630
12	1178	*2356	520	630
13	1187	*2374	520	630

*Note: For 8 or more nails per strap, use double truss for double straps.

General Notes:

1. Steel shall conform to ASTM A653, SS grade 33, min. yield 33 ksi, min. tensile strength 45 ksi and min. galvanized coating of G 60 per ASTM A653.

2. Allowable loads and fasteners are based on NDS 2015.

3. Design loads are for S. Pine, specific gravity 0.55. Design loads for other species shall be adjusted per NDS 2015.

4. Allowable uplift loads have been adjusted for load duration factor CD of 1.6. Allowable gravity loads have been adjusted for CD values of 1.0, per NDS 2015. Design loads do not include 33% increase for steel and concrete.

5. Concrete in Tie beams shall be min. of 2500 psi. Concrete Masonry, Grout and mortar in concrete masonry shall be min. of 1500 psi. Concrete masonry shall comply with ASTM C90.

6. Combined load of Uplift, L1 and L2 shall satisfy the following equation.

$$\frac{\text{Actual Uplift}}{\text{Allowable Uplift}} + \frac{\text{Actual L1}}{\text{Allowable L1}} + \frac{\text{Actual L2}}{\text{Allowable L2}} <= 1.0$$

7. Allowable loads are based on 1½" thick wood members unless otherwise noted.

8. All designs Conform to FBC 2017. ASTM D1761 and ASTM D7147.

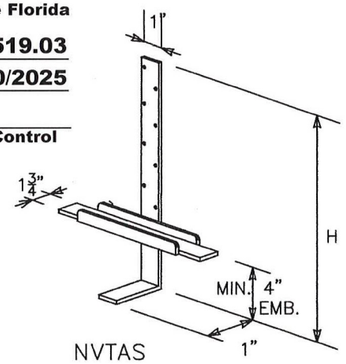

NVTAS

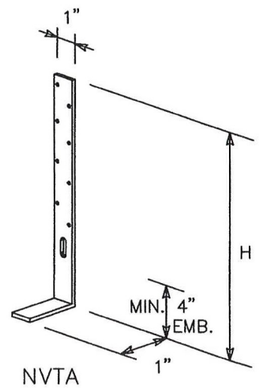

NVTA

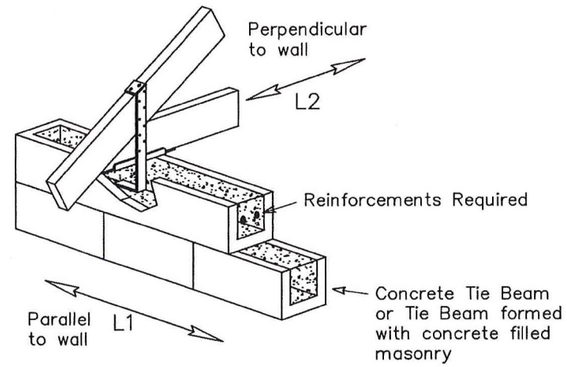

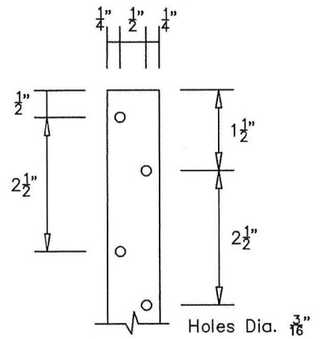

NVTA, NVTAS

VIPIN N. TOLAT, PE (CIVIL)
FL. REG. # 12847
15123 LANTERN CREEK LANE
HOUSTON, TX 77068

5/7/2020

Nu-Vue Industries, Inc.
1053–1059 East 29 Street
Hialeah, Florida 33013
PHONE: (305) 694–0397
FAX: (305) 694–0398

NVTA AND NVTAS TRUSS ANCHORS

DWG #:	Sheet:	Date:	
NU-2	1 of 4	May 5, 2020	

CITY OF MIAMI SPRINGS
BUILDING DEPARTMENT
OFFICE COPY
CITY OF MIAMI SPRINGS
DEC 10 2021
RECEIVED

18 Gauge Angle Clips.

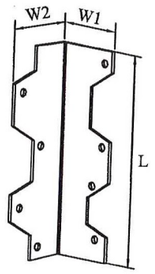

AB-7

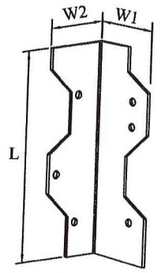

AB-5

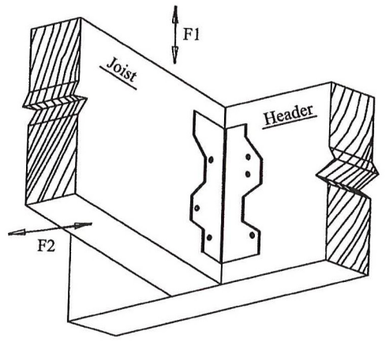

Typical Installation

Product Code	Dimensions (inches)			Fastener Schedule		Alowable Loads (lbs)	
	W1	W2	L	Header	Joist	F1	F2
AB5	1½	2 5/16	5	3-10dx1½"	3-10dx1½"	511	595
AB7	1½	2 5/16	7	4-10dx1½"	4-10dx1½"	582	794

Notes: Nail wider angle leg to Joist and Shorter leg to Header.

GENERAL NOTES:

1. Steel shall conform to ASTM A653, structural grade 33 (Min. yield 33 ksi) and a minimum galvanized coating of G 60 per ASTM A653.

2. Allowable loads are based on National Desing specifications (NDS) for wood construction, 2015/2018 and FBC 2017/2020.

3. Design loads are for Southern Pine species with a specific gravity of 0.55. Allowable loads for other species shall be adjusted accordingly.

4. Common wire nail values are based on NDS 2015/2018, G=0.55 and have been reduced for Penetration Depth factor P/10D.

5. Allowable loads for wind uplift have already been increased by a duration factor of 60% for anchor nail. Load values shown are without 33% steel stress increase.

6. Allowable loads for more than a single connection cannot be added together. A design load which is divided into components in the direction given must be evaluated as follows:

$$\frac{\text{Actual Uplift}}{\text{Allowable Uplift}} + \frac{\text{Actual L1}}{\text{Allowable L1}} + \frac{\text{Actual L2}}{\text{Allowable L2}} <= 1.0$$

7. Allowable loads are based on 1½" thick wood members unless otherwise noted.

8. All tie beams and grouted concrete masonry shall comply with FBC 2017/FBC 2020. Concrete for tie beams and grout and mortar for concrete masonry shall be a minimum of 2500 psi. Concrete masonry shall comply with ASTM C90.

9. All tests have been conducted in accordance with ASTM D-1761 and ASTM D-7147.

PRODUCT REVISED
as complying with the Florida Building Code
NOA-No. 20-0901.05
Expiration Date 05/22/2023
By
Miami-Dade Product Control

VIPIN N. TOLAT, PE (CIVIL)
FL. REG. # 12847
15123 LANTERN CREEK LANE
HOUSTON, TX 77068

8/21/2020

Nu-Vue Industries, Inc.
1053-1059 East 29 Street
Hialeah, Florida 33013
(305) 694-0397
Fax: (305) 694-0398

TRUSS AND TOP PLATE ANCHORS

DWG #:	Sheet:	Date:	Revisions:
NU-1	1 of 4	August 18, 2020	

Deep Seat Truss Anchor.. They are designed to resist lateral and uplift forces. The strap is made of 14 gauge steel and the seats of 20 gauge steel.

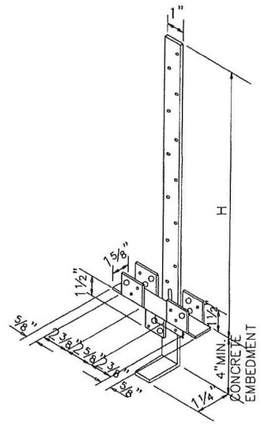

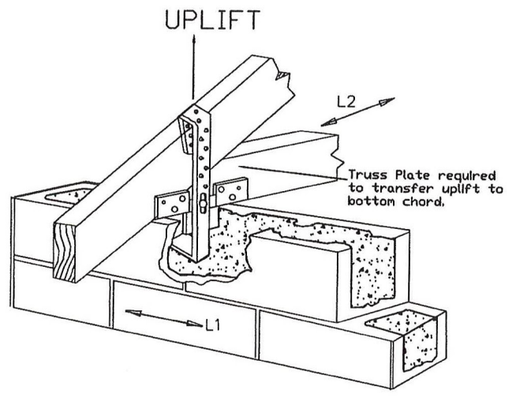

Assembly Product Code	Dimension H (inches)
NVSTA12	12
NVSTA16	16
NVSTA20	20
NVSTA22	22
NVSTA24	24

Total No. of Fasteners in Strap 10d x 1½"	Total No. of Fasteners in 20 GA. Seat 10d x 1½"	Allowable Loads (lbs)		
		Uplift [6]	L1 [6]	L2 [6]
5	6	1046	700	1049
6	6	1141	760	1144
7	6	1236	823	1239
8	6	1331	887	1335
9	6	1426	950	1430

Holden Double Strap Riveted Truss Anchor.. They are designed of 14 gauge steel plates to resist lateral and uplift forces. The seats are made of 20 gauge steel.

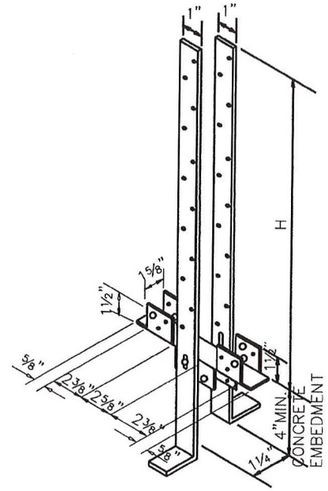

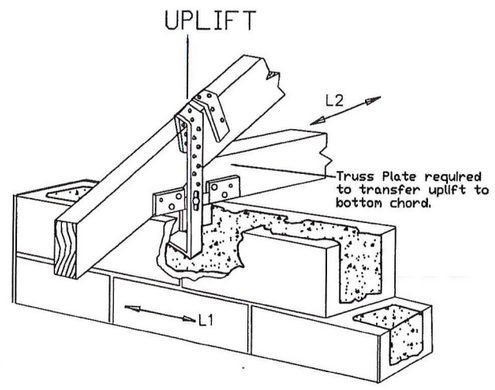

Assembly Product Code	Dimension H (inches)
NVHTA12	12
NVHTA16	16
NVHTA20	20
NVHTA22	22
NVHTA24	24

Total No. of Fasteners in two Straps 10d x 1½"	Total No. of Fasteners in 20 GA. Seat 10d x 1½"	Allowable Loads (lbs)			
		Uplift [6]	Uplift [5]	L1 [6]	L2 [6]
10	6	1506	1766	1050	1450
12	6	1695	1987	1181	1631
14	6	1883	2208	1312	1812
16	6	2071	2429	1444	1994
18	6	2259	2649	1575	2175

Notes:
1. Nails are necessary in straps and seat to achieve, desing loads.
2. See note 6, sheet 1 for combined loading.
3. Nails through chords shall not force the truss plates.
4. For general notes, see sheet 1.
5. For higher uplift loads, concrete shall be 3000 psi.
6. Based on min. 2500 psi concrete.

PRODUCT REVISED
as complying with the Florida Building Code
NOA-No. 20-0901.05
Expiration Date 05/22/2023
By
Miami-Dade Product Control

VIPIN N. TOLAT, PE (CIVIL)
FL. REG. # 12847
15123 LANTERN CREEK LANE
HOUSTON, TX 77068

8/21/2020

Nu-Vue Industries, Inc.
1053-1059 East 29 Street
Hialeah, Florida 33013
(305) 694-0397
Fax: (305) 694-0398

TRUSS AND TOP PLATE ANCHORS

DWG #:	Sheet:	Date:	Revisions:
NU-1	2 of 4	August 18, 2020	

12 Gauge NVTHJ Truss Hip & Jack Hanger

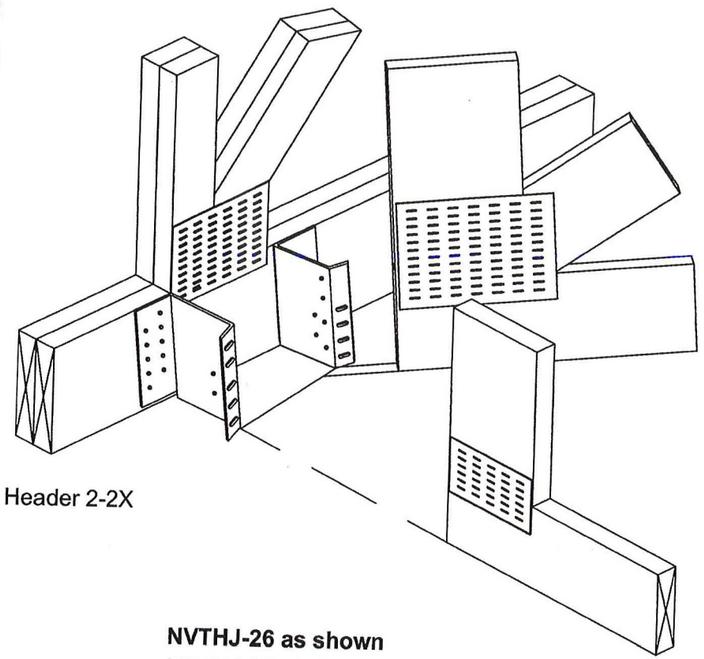

Header 2-2X

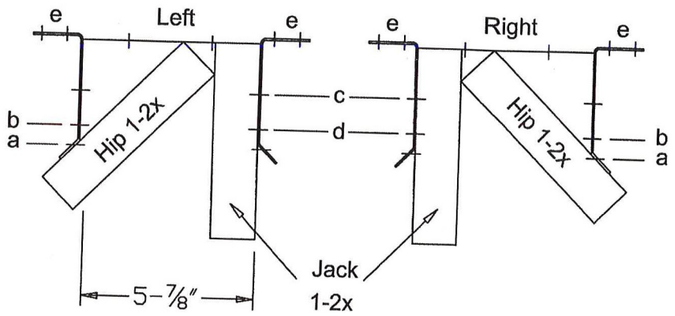

NVTHJ-26 as shown
NVTHJ-28 similar

U.S. Patent No. 4,964,253

Product Code	Allowable Loads (lbs) S. Pine	Nail Schedule						
	Uplift Loads	Header Nails 16d (e)	Hip Nail 10d			Jack Nail 10d		
			a	b	total	c	d	total
NVTHJ26	1478	16	4	3	7	2	3	5
NVTHJ28	1931	20	5	4	9	2	3	5

Note: For 1-2x members
10dx1½" nails can be used

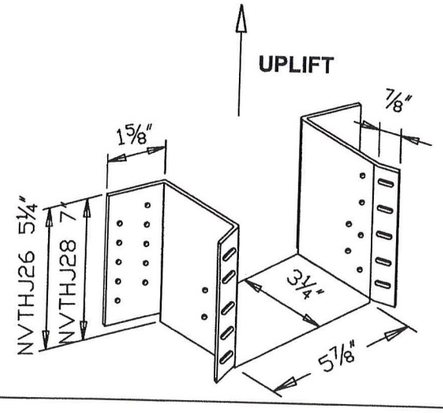

NVTHJ-28 as shown
NVTHJ-26 similar

PRODUCT REVISED
as complying with the Florida Building Code
NOA-No. 20-0901.05
Expiration Date 05/22/2023
By
Miami-Dade Product Control

20G Stud Plate Ties

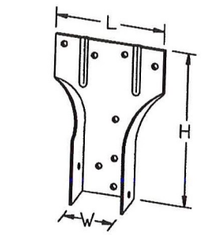

IKE-1
(ISOMETRIC)

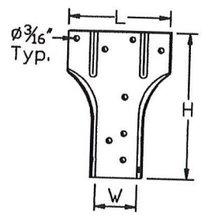

IKE-1

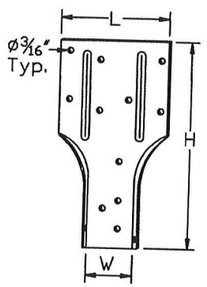

IKE-2

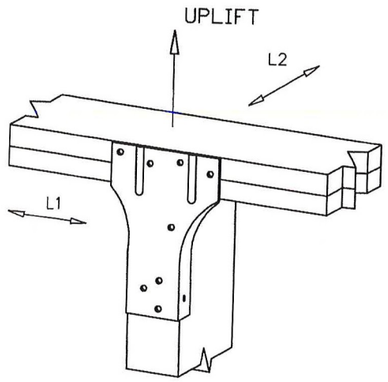

TYPICAL IKE1
INSTALATION

Product Code	Dimensions (inches)			Fasteners		Allowable Loads (lbs)		
	W	H	L	Stud	Plate	Uplift	L1	L2
IKE 1	1½	5	3½	6-10d	4-10d	787	337	337
IKE 2	1½	6⅝	3½	6-10d	7-10d	932	451	318

VIPIN N. TOLAT, PE (CIVIL)
FL. REG. # 12847
15123 LANTERN CREEK LANE
HOUSTON, TX 77068

8/21/2020

Nu-Vue Industries, Inc.
1053-1059 East 29 Street
Hialeah, Florida 33013
(305) 694-0397
Fax: (305) 694-0398

TRUSS AND TOP PLATE ANCHORS

DWG #:	Sheet:	Date:	Revisions:
NU-1	3 of 4	August 18, 2020	

18 Gauge NVTT Sanibel Truss Strap

Product Code	Dimensions (inches)				Fasteners Schedule			Allowable Loads (lbs)	
	W	B	H	L	Truss	Top Plates	Hollow Concrete Masonry	Uplift	L1
NVTT-1	1 9/16	1 3/4	14	13	2-10dx1½"	6-10d	-----	968	543
NVTT-2	1 9/16	1 3/4	14	13	2-10dx1½"	-----	6-¼"Øx1 ½" Tapcons	1584	465

1. 1-10dx1½" nail is placed on each side of the Truss and 3-10dnails in each leg are placed in two top plates.

2. 3-¼"dia. x 1½" long, 1¼" embedment tapcons are placed in each leg and into the hollow concrete masonry. Maintain 2½" edge distance from top of the block and spacing of 3" between the tapcons.

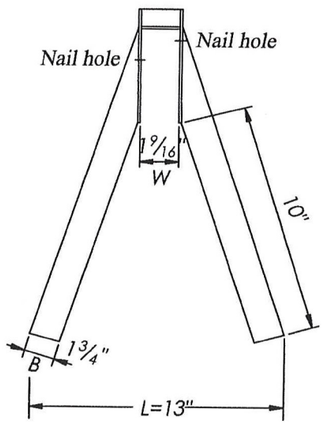

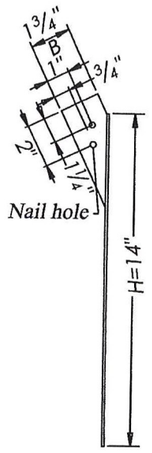

NVTT 1 and 2

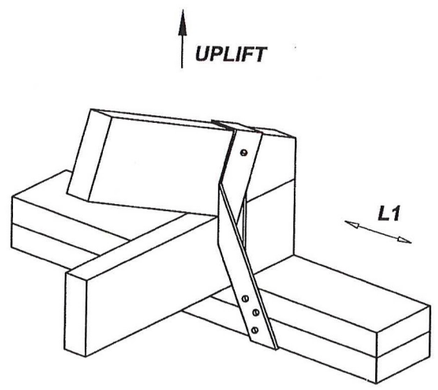

NVTT-1 As Shown
NVTT-2 Similar except concrete masonry with tapcon anchors instead of Wood Plates and nails.

18 Gauge NVHC 37 5WAY Grip Clip (520)

Product Code	Description	Nail Schedule		Allowable Design Loads (lbs)		
		Header or Plate	Joist or Stud	Uplift	L1	L2
NVHC 37	5 Way Clip	16-8d or 16-10d	12-8d or 12-10d	702	560	637

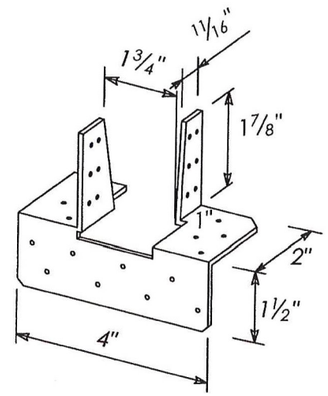

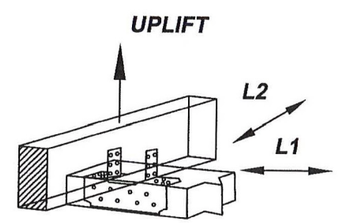

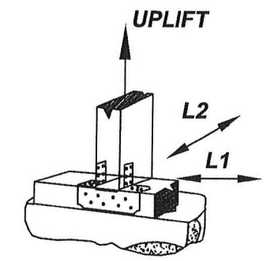

PRODUCT REVISED
as complying with the Florida Building Code
NOA-No. 20-0901.05
Expiration Date 05/22/2023
By
Miami-Dade Product Control

VIPIN N. TOLAT, PE (CIVIL)
FL. REG. # 12847
15123 LANTERN CREEK LANE
HOUSTON, TX 77068

8/21/2020

Nu-Vue Industries, Inc.
1053-1059 East 29 Street
Hialeah, Florida 33013
(305) 694-0397
Fax: (305) 694-0398

TRUSS AND TOP PLATE ANCHORS

DWG #:	Sheet:	Date:	Revisions:
NU-1	4 of 4	August 18, 2020	

TABLE 5

NVRT Flat and Twisted Rafter Ties

Length (in)	Product Code	Gauge
12	NVRT–12	14
16	NVRT–16	14
18	NVRT–18	14
20	NVRT–20	14
22	NVRT–22	14
24	NVRT–24	14
30	NVRT–30	14
36	NVRT–36	14
48	NVRT–48	14

16d Fasteners		Maximum Uplift Load (lbs)	
TOTAL	In each member*	Flat Ties	Twisted Ties
8	4	725	724
10	5	861	860
12	6	998	996
14	7	1135	1132

Notes:

1. Specify "F" for Flat and "T" for Twisted when ordering.
2. Fastener values are based on a minimum $1\frac{1}{2}$" thick wood members.
3. * Indicates no. of nails in each connected wood member.
4. See General Notes, sheet 1.

PRODUCT REVISED
as complying with the Florida Building Code
NOA–No. 20-0519.03
Expiration Date 07/30/2025
By
Miami–Dade Product Control

TABLE 6

NVRT Twisted Rafter Ties to Concrete Tie Beams or Concrete Filled Masonry

Length (in)	Product Code	Gauge
12	NVRT–12	14
16	NVRT–16	14
18	NVRT–18	14
20	NVRT–20	14
22	NVRT–22	14
24	NVRT–24	14
30	NVRT–30	14
36	NVRT–36	14
48	NVRT–48	14

No. of 16d nails to Wood Framing	No. of $\frac{1}{4}$" diameter Tapcons to Concrete	Maximum Uplift Load (lbs)
4	6	722
5	7	856
6	8	991
7	9	1125

Notes:

1. ITW tapcons shall be embedded a minimum of $1\frac{1}{4}$" into concrete tiebeam or tiebeam formed with concrete filled masonry. ITW tapcons shall have a min. edge distance of $2\frac{1}{2}$" and minimum spacing of $1\frac{1}{2}$" as shown.
2. See General Notes, sheet 1.
3. All tapcons must be in the same row spaced at $1\frac{1}{2}$" on centers. Do not use holes in the opposite row. Strap must be long enough to accommodate required tapcons.

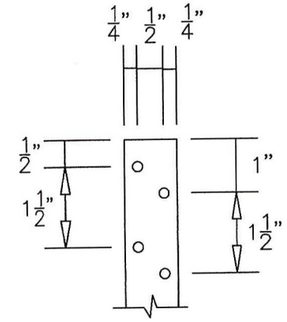

NVRT Anchor
Holes dia. $\frac{3}{16}$"

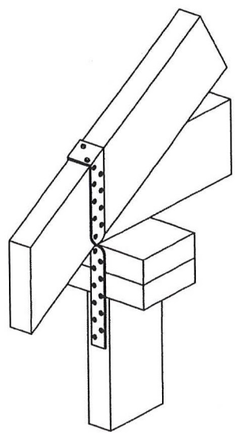

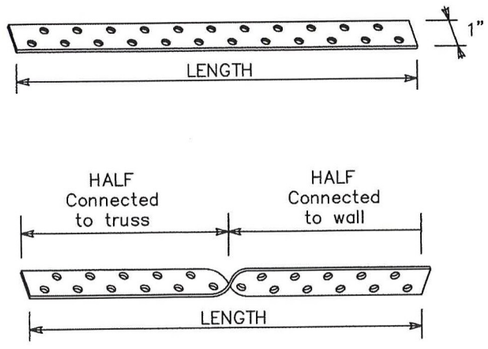

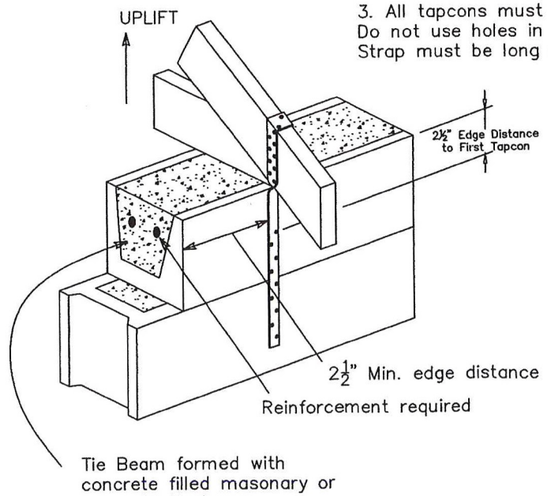

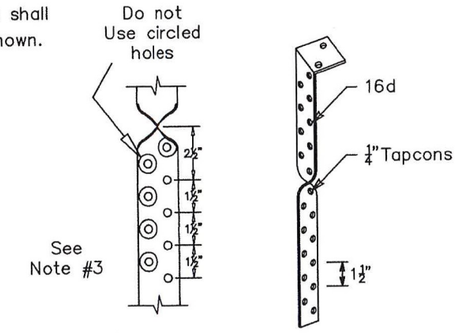

VIPIN N. TOLAT, PE (CIVIL)
FL. REG. # 12847
15123 LANTERN CREEK LANE
HOUSTON, TX 77068

5/7/2020

Nu-Vue Industries, Inc.
1053–1059 East 29 Street
Hialeah, Florida 33013
PHONE: (305) 694–0397
FAX: (305) 694–0398

NVRT FLAT AND TWISTED RAFTER TIES

DWG #:	Sheet:	Date:	
NU-2	3 of 4	May 5, 2020	

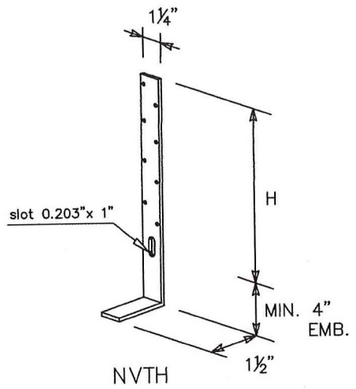

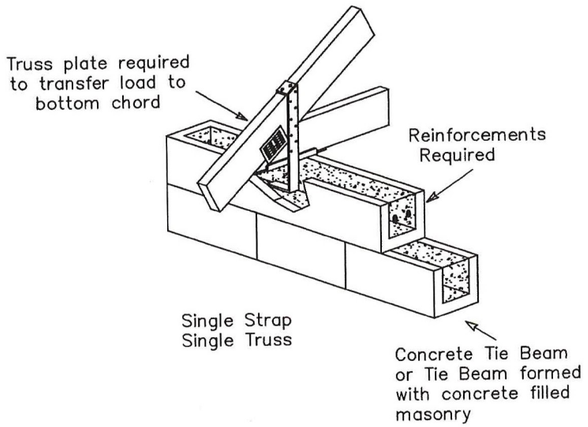

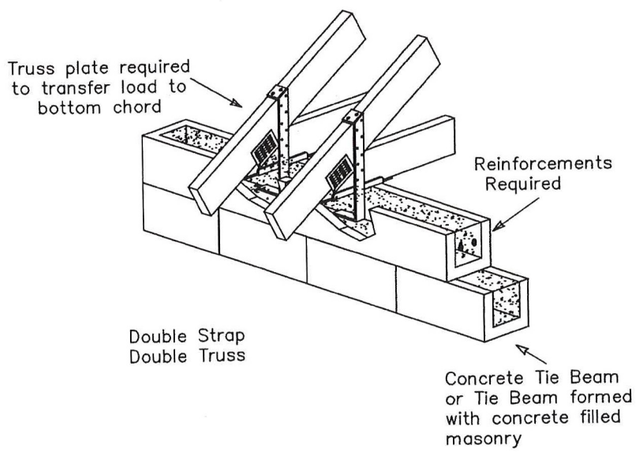

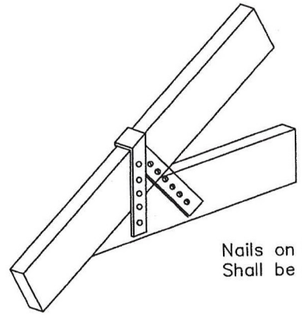

For General Notes, see sheet 1

TABLE 7

Truss Anchors NVTH

H Length (in)	Product Code	Gauge seat	Gauge strap
12	NVTH–16	18	14
14	NVTH–18	18	14
16	NVTH–20	18	14
18	NVTH–22	18	14
20	NVTH–24	18	14
22	NVTH–26	18	14
24	NVTH–28	18	14
26	NVTH–30	18	14
32	NVTH–36	18	14
44	NVTH–48	18	14

No. of Fasteners in each Strap 10d x 1.5"	Maximum Uplift Loads (lbs)	
	Single Strap on Single Truss	Double Straps on Double Truss
5	1032	2064
6	1222	2444
7	1275	2550
8	1329	2658
9	1383	2766
10	1437	2874
11	1490	2980
12	1544	3088
13	1598	3196

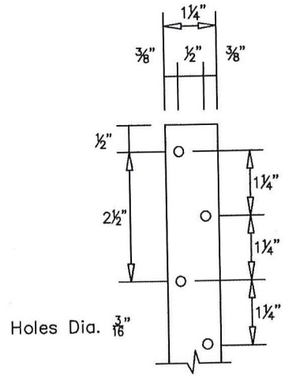

NVTH

PRODUCT REVISED
as complying with the Florida Building Code
NOA-No. 20-0519.03
Expiration Date 07/30/2025
By
Miami-Dade Product Control

VIPIN N. TOLAT, PE (CIVIL)
FL. REG. # 12847
15123 LANTERN CREEK LANE
HOUSTON, TX 77068

5/7/2020

Nu–Vue Industries, Inc.
1053–1059 East 29 Street
Hialeah, Florida 33013
Phone: (305) 694–0397
Fax: (305) 694–0398

NVTH ANCHORS

DWG #:	Sheet:	Date:	Revisions:
NU–2	4 of 4	May 5, 2020	

RHEEM SALES COMPANY, INC.

WIND LOAD CERTIFICATION OF MECHANICAL UNIT CABINETRY AND STEEL/ALUMINUM TIE-DOWN CLIPS: AT GRADE MOUNTED APPLICATIONS

OFFICE COPY
CITY OF MIAMI SPRINGS
BUILDING DEPARTMENT
DEC 10 2021
RECEIVED
OCT 22 2020

FRANK BENNARDO, PE
PE# 0046549 CA# 9885
LICENSE
No 46549
STATE OF

DIGITAL SEAL NOTICE: IF THIS DOCUMENT IS DIGITALLY SIGNED, THIS SHEET IS PART OF A DIGITALLY SIGNED SET. IT SHALL REMAIN IN DIGITAL FORMAT, SHALL BE VERIFIED BY ELECTRONIC MEANS, & PRINTED COPIES OF THIS DOCUMENT ARE NOT CONSIDERED SIGNED AND SEALED.
PRINTED DOCUMENT NOTICE: IF THIS DOCUMENT IS PRINTED & DOESN'T CONTAIN AN ENGINEER'S ORIGINAL SIGNATURE & SEAL, THIS DOCUMENT IS VOID & NOT VALID FOR USE. PHOTOCOPIES ARE NOT PERMITTED FOR USE.

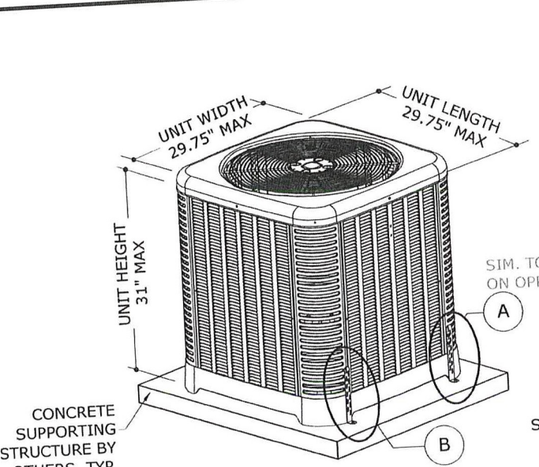

1/1 MECHANICAL UNIT — FRONT ISOMETRIC — N.T.S.

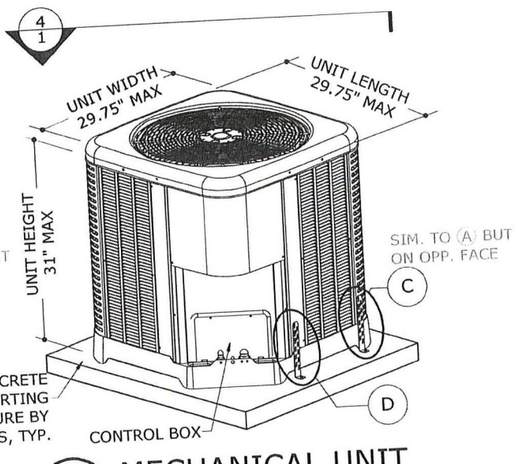

2/1 MECHANICAL UNIT — BACK ISOMETRIC — N.T.S.

THESE ISOMETRICS ARE INTENDED FOR DIAGRAMMATICAL PURPOSES ONLY; ALTERNATE RHEEM UNITS MAY VARY IN APPEARANCE

PRODUCT REVISED
as complying with the Florida Building Code
NOA–No. 20-1102.09
Expiration Date 02/25/2026
By
Miami–Dade Product Control

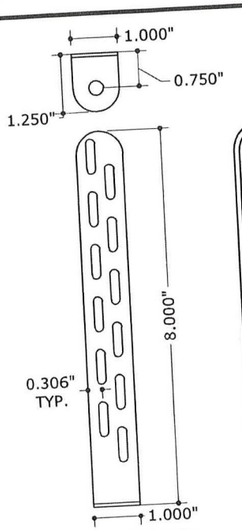

TIE-DOWN BRACKET

MIAMI TECH CLIP: 14GA (0.07") ASTM A653 Fu=90 KSI STEEL (CUTD8) OR 0.080" 5052-H32 ALUMINUM (CUTDA8), MIAMI TECH KIT # RRCUTDSMK OR RRCUTDASMK

APPROVED DESIGN CRITERIA:

ASCE 7 Vult=175 MPH (Vasd-136 MPH), EXPOSURE "C" AT GRADE INSTALLATION ONLY

DESIGN NOTES:

THIS SYSTEM HAS BEEN DESIGNED IN ACCORDANCE WITH ASCE 7 AND THE FLORIDA BUILDING CODE SEVENTH EDITION (2020) FOR USE WITHIN AND OUTSIDE THE HIGH VELOCITY HURRICANE ZONE. THE DESIGN CRITERIA CONSIDERS ASCE 7 SECTION 29 FOR "OTHER STRUCTURES - SOLID FREESTANDING WALLS" INSTALLATIONS AT GRADE. ALL DESIGN VARIABLES ARE IN ACCORDANCE WITH ASCE 7 CHAPTERS 26 & 29.

GENERAL NOTES:

1. THIS SYSTEM HAS BEEN DESIGNED AND SHALL BE FABRICATED IN ACCORDANCE WITH THE REQUIREMENTS OF THE FLORIDA BUILDING CODE SEVENTH EDITION (2020) & ASCE 7. THIS SYSTEM MAY BE USED WITHIN AND OUTSIDE THE HIGH VELOCITY HURRICANE ZONE. THIS DESIGN IS NOT INTENDED TO CERTIFY IMPACT RESISTANCE OF THE MECHANICAL UNIT CABINETRY.
2. NO 33-1/3% INCREASE IN ALLOWABLE STRESS HAS BEEN USED IN THE DESIGN OF THIS SYSTEM.
3. DESIGN & CERTIFICATION OF THE UNIT CABINETRY IS APPROVED THROUGH TEST REPORT#0323.01-15 BY AMERICAN TEST LAB OF SOUTH FLORIDA.
4. ALL DIMENSIONS AND THE MINIMUM WEIGHT (120 LB MINIMUM) OF MECHANICAL UNIT SHALL CONFORM TO LIMITATIONS STATED HEREIN. ALL MECHANICAL SPECIFICATIONS (CLEAR SPACE, TONNAGE, ETC.) SHALL BE AS PER MANUFACTURER RECOMMENDATIONS AND ARE THE EXPRESS RESPONSIBILITY OF THE CONTRACTOR.
5. TAPCONS REFERRED TO HEREIN SHALL BE ITW BUILDEX BRAND, ASTM F593 410 STAINLESS STEEL OR EQUIVALENT ONLY, INSTALLED TO 3000 PSI MIN CONCRETE. SEE ANCHOR SCHEDULE FOR ANCHOR REQUIREMENTS. ALL SHEET METAL SCREWS USED TO FASTEN BRACKETS TO MECHANICAL UNITS SHALL BE #10 (14 MIN THREADS PER INCH) ASTM F593 410 STAINLESS STEEL OR EQUIVALENT ONLY. PROVIDE (5) PITCHES MINIMUM PAST THE THREAD PLANE FOR SHEET METAL SCREWS. ALL FASTENERS SHALL HAVE APPROPRIATE CORROSION PROTECTION TO PREVENT ELECTROLYSIS.
6. ALL CONCRETE SPECIFIED HEREIN IS NOT PART OF THIS CERTIFICATION. AS A MINIMUM, ALL CONCRETE SHALL BE STRUCTURAL CONCRETE 4" MIN. THICK AND SHALL HAVE MINIMUM COMPRESSIVE STRENGTH OF 3000 PSI, UNLESS NOTED OTHERWISE.
7. THE CONTRACTOR IS RESPONSIBLE TO INSULATE ALL MEMBERS FROM DISSIMILAR MATERIALS TO PREVENT ELECTROLYSIS.
8. ELECTRICAL GROUND, WHEN REQUIRED, TO BE DESIGNED & INSTALLED BY OTHERS.
9. THE ADEQUACY OF ANY EXISTING STRUCTURE TO WITHSTAND SUPERIMPOSED LOADS SHALL BE VERIFIED BY THE ONSITE DESIGN PROFESSIONAL AND IS NOT INCLUDED IN THIS CERTIFICATION.EXCEPT AS EXPRESSLY PROVIDED HEREIN, NO ADDITIONAL CERTIFICATIONS OR AFFIRMATIONS ARE INTENDED.
10. THE SYSTEM DETAILED HEREIN IS GENERIC AND DOES NOT PROVIDE INFORMATION FOR A SPECIFIC SITE. FOR SITE CONDITIONS DIFFERENT FROM THE CONDITIONS DETAILED HEREIN, A LICENSED ENGINEER OR REGISTERED ARCHITECT SHALL PREPARE SITE SPECIFIC DOCUMENTS FOR USE IN CONJUNCTION WITH THIS DOCUMENT.
11. WATER-TIGHTNESS OF EXISTING HOST SUBSTRATE SHALL BE THE FULL RESPONSIBILITY OF THE INSTALLING CONTRACTOR. CONTRACTOR SHALL ENSURE THAT ANY REMOVED OR ALTERED WATERPROOFING MEMBRANE IS RESTORED AFTER FABRICATION AND INSTALLATION OF STRUCTURE PROPOSED HEREIN. THIS ENGINEER SHALL NOT BE RESPONSIBLE FOR ANY WATERPROOFING OR LEAKAGE ISSUES WHICH MAY OCCUR AS WATER-TIGHTNESS SHALL BE THE FULL RESPONSIBILITY OF THE INSTALLING CONTRACTOR.
12. FOR AN EXPLANATION OF EXPOSURE CATEGORIES THAT ACCOMPANY THE Vult WIND SPEEDS USED IN THIS DOCUMENT, SEE SECTION 26.7 OF ASCE 7

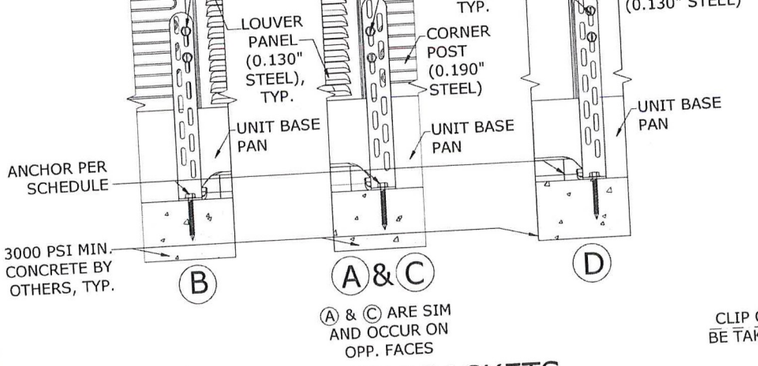

3/1 TIE-DOWN BRACKETS — ELEVATION — N.T.S.

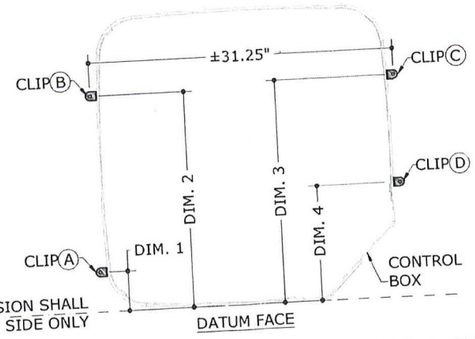

4/1 TIE-DOWN BRACKET LAYOUT — PLAN — N.T.S.

ANCHOR SCHEDULE:

SUBSTRATE	DESCRIPTION
CONCRETE: (4" THICK MIN, 3000 PSI MIN.)	(1)-1/4"Ø STAINLESS STEEL ITW BUILDEX TAPCON, 1¾" FULL EMBED TO CONCRETE, 2½" MIN. EDGE DISTANCE, 3" MIN. SPACING TO ANY ADJACENT ANCHOR.

TIE-DOWN BRACKET OFFSETS:

DIM. 1	4.50" MAX OFFSET FROM DATUM FACE
DIM. 2	24.50" MIN OFFSET FROM DATUM FACE
DIM. 3	25.50" MIN OFFSET FROM DATUM FACE
DIM. 4	13" MAX OFFSET FROM DATUM FACE

VISIT ECALC.IO/28800
FOR SITE SPECIFIC DEVIATIONS & MORE INFORMATION ABOUT THIS DOCUMENT OR SCAN THIS QR CODE
VISIT ENGINEERINGEXPRESS.COM/RHEEM FOR ADDITIONAL PLANS, REPORTS & RESOURCES

ENGINEERING EXPRESS®
CORPORATE OFFICE:
160 SW 12th AVE, SUITE 106
DEERFIELD BEACH, FL 33442
(954) 354-0660 | (866) 396-9999
TEAM@ENGINEERINGEXPRESS.COM
ENGINEERINGEXPRESS.COM

RHEEM SALES COMPANY, INC.
1100 ABERNATHY ROAD SUITE 1400
ATLANTA, GA
(770) 351-3000

MECHANICAL UNIT
STEEL TIE-DOWN CLIPS
FLORIDA BUILDING CODE SEVENTH EDITION (2020)

REMARKS	DRWN	CHKD	DATE
INIT ISSUE	JAC	TSB	05/14/15
2017 FBC UPDATE	LAO	FLB	01/12/18
2020 FBC	CCB	RWN	10/19/20
			-
			-
			-

THIS DOCUMENT IS THE PROPERTY OF ENGINEERING EXPRESS. AND SHALL NOT BE REPRODUCED IN WHOLE OR PART WITHOUT WRITTEN CONSENT OF ENGINEERING EXPRESS. ALTERATIONS, ADDITIONS OR OTHER MARKINGS TO THIS DOCUMENT ARE NOT PERMITTED AND INVALIDATE OUR CERTIFICATION.
COPYRIGHT ENGINEERING EXPRESS®

20-28800GA

SCALE: NTS UNLESS NOTED

1 OF 7

V:\Projects\20-28800 - NOA 18-0712.07 - Wind Load Cert of Mechanical Unit\WP\2020 FBC\40 - 20-28800 - NOA18-0719.07 - DWGp1-4.dwg
10/22/2020 - 3:14pm rickn

RHEEM SALES COMPANY, INC.

WIND LOAD CERTIFICATION OF MECHANICAL UNIT CABINETRY AND STEEL/ALUMINUM TIE-DOWN CLIPS: AT GRADE MOUNTED APPLICATIONS

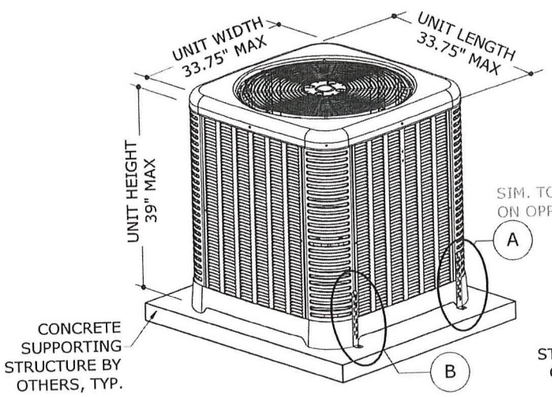

1/1 MECHANICAL UNIT — FRONT ISOMETRIC — N.T.S.

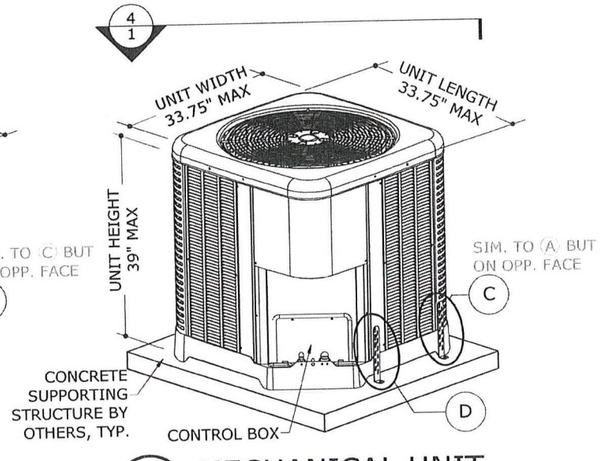

2/1 MECHANICAL UNIT — BACK ISOMETRIC — N.T.S.

THESE ISOMETRICS ARE INTENDED FOR DIAGRAMMATICAL PURPOSES ONLY; ALTERNATE RHEEM UNITS MAY VARY IN APPEARANCE

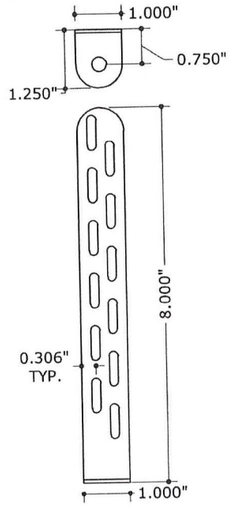

TIE-DOWN BRACKET

MIAMI TECH CLIP: 14GA (0.07")
ASTM A653 Fu=90 KSI STEEL
(CUTD8) OR 0.080" 5052-H32
ALUMINUM (CUTDA8), MIAMI
TECH KIT # RRCUTDSMK OR
RRCUTDASMK

(2)-#10 SMS PER BRACKET FOR UNITS UP TO 35" TALL. (3)-#10 SMS PER BRACKET FOR UNITS UP TO 39" TALL (ONLY (2) SMS SHOWN BELOW)

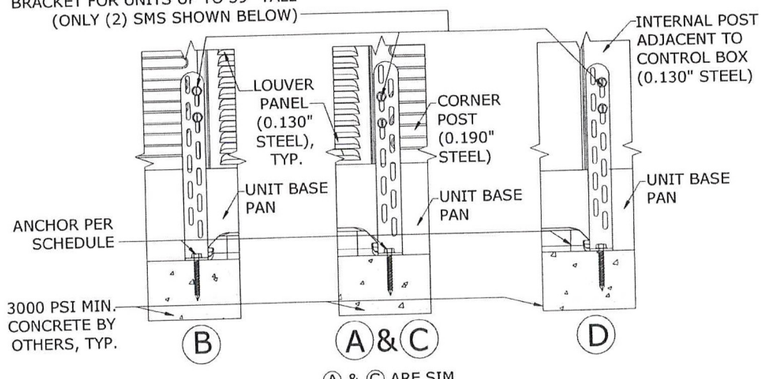

Ⓐ & Ⓒ ARE SIM AND OCCUR ON OPP. FACES

3/1 TIE-DOWN BRACKETS — ELEVATION — N.T.S.

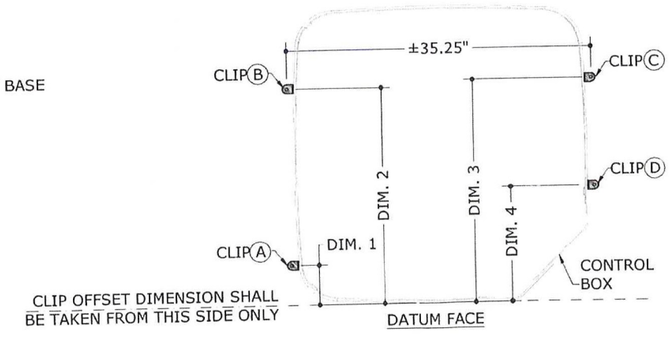

4/1 TIE-DOWN BRACKET LAYOUT — PLAN — N.T.S.

ANCHOR SCHEDULE:

SUBSTRATE	DESCRIPTION
CONCRETE: (4" THICK MIN, 3000 PSI MIN.)	(1)-1/4"Ø STAINLESS STEEL ITW BUILDEX TAPCON, 1¾" FULL EMBED TO CONCRETE, 2½" MIN. EDGE DISTANCE, 3" MIN. SPACING TO ANY ADJACENT ANCHOR.

TIE-DOWN BRACKET OFFSETS:

DIM. 1	4.50" MAX OFFSET FROM DATUM FACE
DIM. 2	28.00" MIN OFFSET FROM DATUM FACE
DIM. 3	29.00" MIN OFFSET FROM DATUM FACE
DIM. 4	13.00" MAX OFFSET FROM DATUM FACE

PRODUCT REVISED
as complying with the Florida Building Code
NOA–No. 20-1102.09
Expiration Date 02/25/2026
By
Miami–Dade Product Control

FRANK BENNARDO, PE
PE# 0046549 CA# 9885
No 46549
OCT 22 2020
STATE OF FLORIDA
PROFESSIONAL ENGINEER

DIGITAL SEAL NOTICE:
IF THIS DOCUMENT IS DIGITALLY SIGNED, THIS SHEET IS PART OF A DIGITALLY SIGNED FILE IT SHALL REMAIN IN DIGITAL FORMAT, SHALL BE VERIFIED BY ELECTRONIC MEANS, & PRINTED COPIES OF THIS DOCUMENT ARE NOT CONSIDERED SIGNED AND SEALED.
PRINTED DOCUMENT NOTICE:
IF THIS DOCUMENT IS PRINTED & DOESN'T CONTAIN AN ENGINEER'S ORIGINAL SIGNATURE & SEAL, THIS DOCUMENT IS VOID & NOT VALID FOR USE. PHOTOCOPIES ARE NOT PERMITTED FOR USE.

ENGINEERING EXPRESS
CORPORATE OFFICE:
160 SW 12th AVE, SUITE 106
DEERFIELD BEACH, FL 33442
(954) 354-0660 | (866) 396-9999
TEAM@ENGINEERINGEXPRESS.COM
ENGINEERINGEXPRESS.COM

RHEEM SALES COMPANY, INC.
1100 ABERNATHY ROAD SUITE 1400
ATLANTA, GA
(770) 351-3000

MECHANICAL UNIT
STEEL TIE-DOWN CLIPS
FLORIDA BUILDING CODE SEVENTH EDITION (2020)

REMARKS	DRWN	CHKD	DATE
INIT ISSUE	JAC	TSB	05/14/15
2017 FBC UPDATE	LAO	FLB	01/12/18
2020 FBC	CCB	RWN	10/19/20
-	-	-	-
-	-	-	-

THIS DOCUMENT IS THE PROPERTY OF ENGINEERING EXPRESS, AND SHALL NOT BE REPRODUCED IN WHOLE OR PART WITHOUT WRITTEN CONSENT OF ENGINEERING EXPRESS. ALTERATIONS, ADDITIONS, OR OTHER MARKINGS TO THIS DOCUMENT ARE NOT PERMITTED AND INVALIDATE OUR CERTIFICATION.
COPYRIGHT ENGINEERING EXPRESS®

20-28800GB
SCALE: NTS UNLESS NOTED
2 OF 7

V:\Projects\20-28800 - NOA 18-0712.07 - Wind Load Cert of Mechanical Unit\WP2020 FBC\40 - 20-28800 - NOA18-0719.07 - DWGp1-4.dwg
10/22/2020 - 3:14pm rickn

RHEEM SALES COMPANY, INC.

WIND LOAD CERTIFICATION OF MECHANICAL UNIT CABINETRY AND STEEL/ALUMINUM TIE-DOWN CLIPS: AT GRADE MOUNTED APPLICATIONS

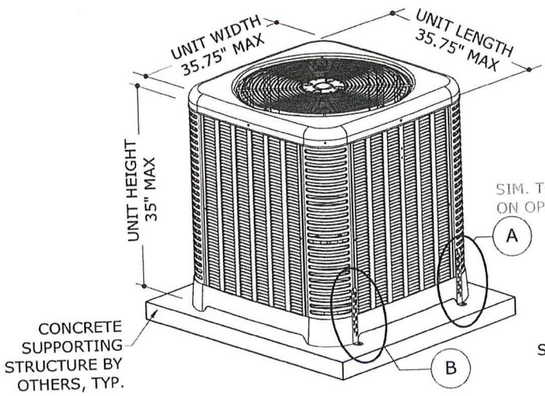

1/1 MECHANICAL UNIT — FRONT ISOMETRIC — N.T.S.

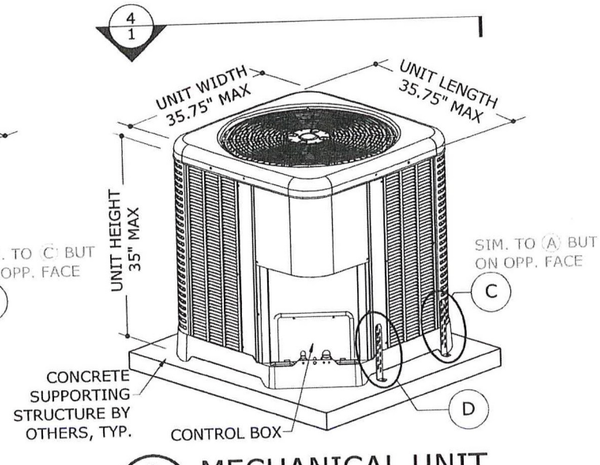

2/1 MECHANICAL UNIT — BACK ISOMETRIC — N.T.S.

THESE ISOMETRICS ARE INTENDED FOR DIAGRAMMATICAL PURPOSES ONLY; ALTERNATE RHEEM UNITS MAY VARY IN APPEARANCE

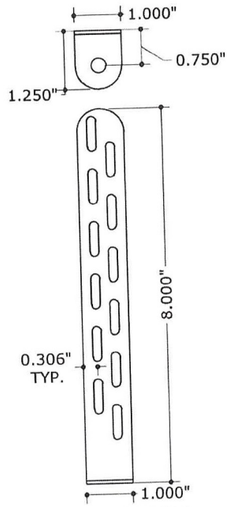

TIE-DOWN BRACKET

MIAMI TECH CLIP: 14GA (0.07") ASTM A653 Fu=90 KSI STEEL (CUTD8) OR 0.080" 5052-H32 ALUMINUM (CUTDA8), MIAMI TECH KIT # RRCUTDSMK OR RRCUTDASMK

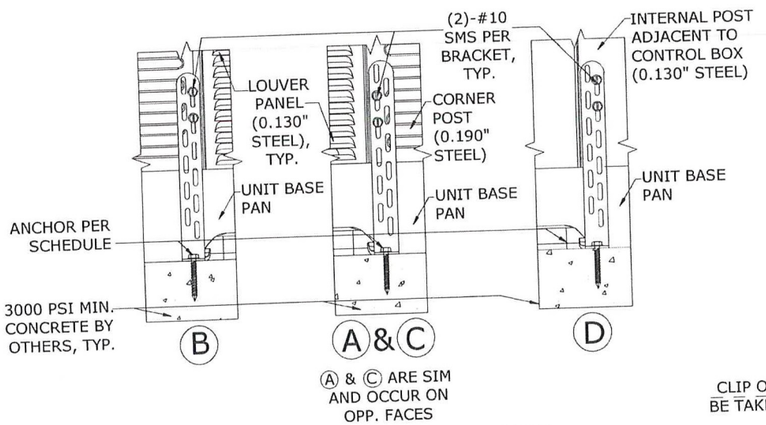

Ⓐ & Ⓒ ARE SIM AND OCCUR ON OPP. FACES

3/1 TIE-DOWN BRACKETS — ELEVATION — N.T.S.

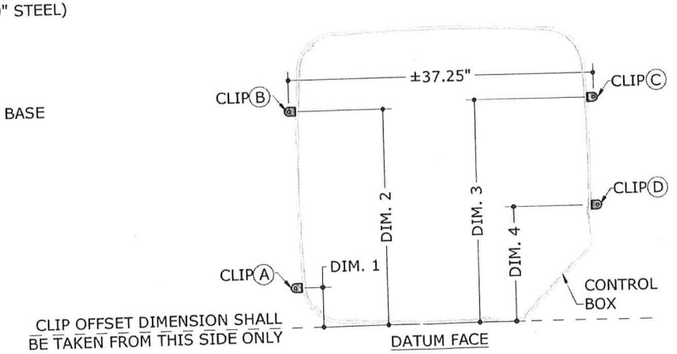

4/1 TIE-DOWN BRACKET LAYOUT — PLAN — N.T.S.

ANCHOR SCHEDULE:

SUBSTRATE	DESCRIPTION
CONCRETE: (4" THICK MIN, 3000 PSI MIN.)	(1)-1/4"Ø STAINLESS STEEL ITW BUILDEX TAPCON, 1¾" FULL EMBED TO CONCRETE, 2½" MIN. EDGE DISTANCE, 3" MIN. SPACING TO ANY ADJACENT ANCHOR.

TIE-DOWN BRACKET OFFSETS:

DIM. 1	4.50" MAX OFFSET FROM DATUM FACE
DIM. 2	30.00" MIN OFFSET FROM DATUM FACE
DIM. 3	31.00" MIN OFFSET FROM DATUM FACE
DIM. 4	13.00" MAX OFFSET FROM DATUM FACE

PRODUCT REVISED
as complying with the Florida Building Code
NOA-No. 20-1102.09
Expiration Date 02/25/2026
By
Miami-Dade Product Control

FRANK BENIARDO, PE
PE# 0046549 CA# 9885
LICENSE No 46549 STATE OF FLORIDA
OCT 22 2020

DIGITAL SEAL NOTICE: IF THIS DOCUMENT IS DIGITALLY SIGNED, THIS SHEET IS PART OF A DIGITALLY SIGNED FILE. IT SHALL REMAIN IN DIGITAL FORMAT, SHALL BE VERIFIED BY ELECTRONIC MEANS, & PRINTED COPIES OF THIS DOCUMENT ARE NOT CONSIDERED SIGNED AND SEALED.
PRINTED DOCUMENT NOTICE: IF THIS DOCUMENT IS PRINTED & DOESN'T CONTAIN AN ENGINEER'S ORIGINAL SIGNATURE & SEAL, THIS DOCUMENT IS VOID & NOT VALID FOR USE. PHOTOCOPIES ARE NOT PERMITTED FOR USE.

ENGINEERING EXPRESS
CORPORATE OFFICE:
160 SW 12th AVE, SUITE 106
DEERFIELD BEACH, FL 33442
(954) 354-0660 | (866) 396-9999
TEAM@ENGINEERINGEXPRESS.COM
ENGINEERINGEXPRESS.COM

RHEEM SALES COMPANY, INC.
1100 ABERNATHY ROAD SUITE 1400
ATLANTA, GA
(770) 351-3000

MECHANICAL UNIT
STEEL TIE-DOWN CLIPS
FLORIDA BUILDING CODE SEVENTH EDITION (2020)

REMARKS	DRWN	CHKD	DATE
INIT ISSUE	JAC	TSB	05/14/15
2017 FBC UPDATE	LAO	FLB	01/12/18
2020 FBC	CCB	RWN	10/19/20
-	-	-	-
-	-	-	-

THIS DOCUMENT IS THE PROPERTY OF ENGINEERING EXPRESS, AND SHALL NOT BE REPRODUCED IN WHOLE OR PART WITHOUT WRITTEN CONSENT OF ENGINEERING EXPRESS. ALTERATIONS, ADDITIONS, OR OTHER MARKINGS TO THIS DOCUMENT ARE NOT PERMITTED AND INVALIDATE EOR CERTIFICATION.
COPYRIGHT ENGINEERING EXPRESS®

20-28800GC

SCALE: NTS UNLESS NOTED

3 OF 7

V:\Projects\20-28800 - NOA 18-0712.07 - Wind Load Cert of Mechanical Unit\WP\2020 FBC\40 - 20-28800 - NOA18-0719.07 - DWGp1-4.dwg
10/22/2020 - 3:14pm rickn

RHEEM SALES COMPANY, INC.

WIND LOAD CERTIFICATION OF MECHANICAL UNIT CABINETRY AND STEEL/ALUMINUM TIE-DOWN CLIPS: AT GRADE MOUNTED APPLICATIONS

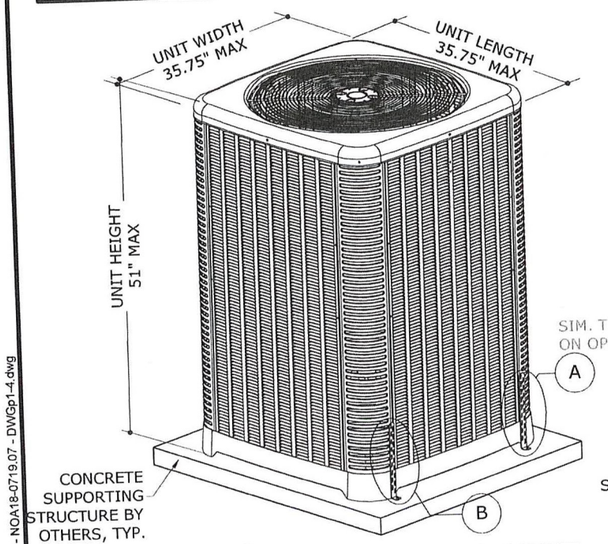

1 / 1 MECHANICAL UNIT
N.T.S. FRONT ISOMETRIC

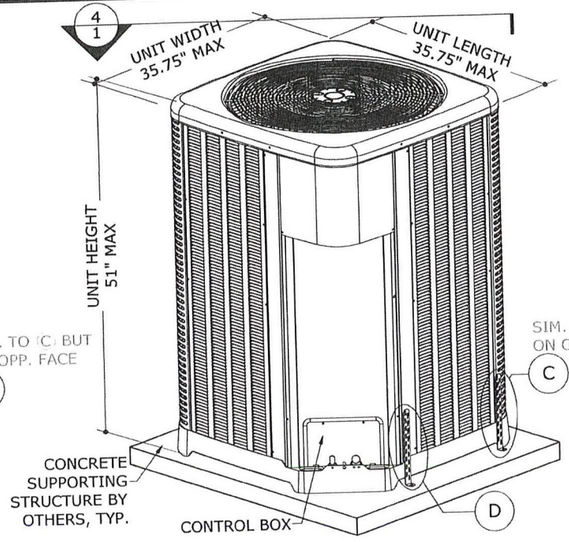

2 / 1 MECHANICAL UNIT
N.T.S. BACK ISOMETRIC

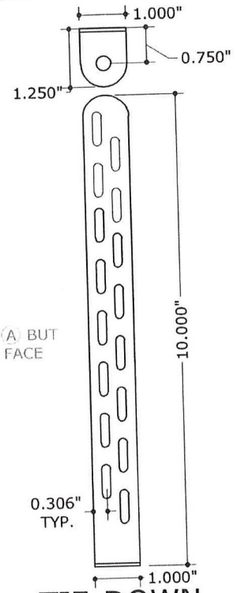

TIE-DOWN BRACKET

MIAMI TECH CLIP: 14GA (0.07") ASTM A653
Fu=90 KSI STEEL (CUTD10) OR 0.080"
5052-H32 ALUMINUM (CUTDA10), MIAMI
TECH KIT # RRCUTDLK OR RRCUTDALK

THESE ISOMETRICS ARE INTENDED FOR DIAGRAMMATICAL PURPOSES ONLY; ALTERNATE RHEEM UNITS MAY VARY IN APPEARANCE

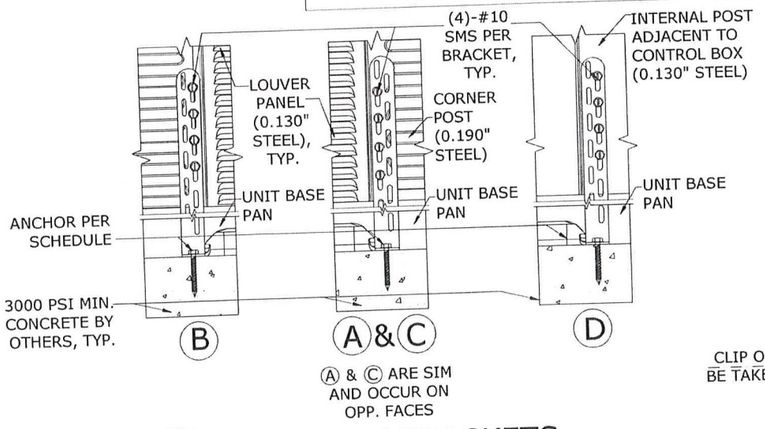

Ⓐ & Ⓒ ARE SIM AND OCCUR ON OPP. FACES

3 / 1 TIE-DOWN BRACKETS
N.T.S. ELEVATION

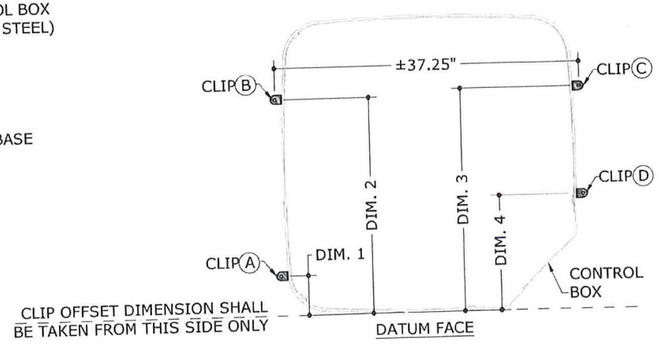

4 / 1 TIE-DOWN BRACKET LAYOUT
N.T.S. PLAN

ANCHOR SCHEDULE:

SUBSTRATE	DESCRIPTION
CONCRETE: (4" THICK MIN, 3000 PSI MIN.)	(1)-1/4"Ø CARBON STEEL SIMPSON STRONG BOLT 2, 1¾" MIN EMBED TO CONCRETE, 3" MIN. EDGE DISTANCE, 3" MIN. SPACING TO ANY ADJACENT ANCHOR.
	(1)-1/4"Ø CARBON STEEL DEWALT WEDGE BOLT+, 2⅛" MIN EMBED TO CONCRETE, 3" MIN. EDGE DISTANCE, 3" MIN. SPACING TO ANY ADJACENT ANCHOR.

SUPPORTING CONCRETE SUBSTRATE DEPTH SHALL BE A MINIMUM 1.5xANCHOR EMBED.
EITHER ANCHOR FROM THIS SCHEDULE MAY BE USED FOR INSTALLATION.

TIE-DOWN BRACKET OFFSETS:

DIM. 1	4.50" MAX OFFSET FROM DATUM FACE
DIM. 2	30.00" MIN OFFSET FROM DATUM FACE
DIM. 3	31.00" MIN OFFSET FROM DATUM FACE
DIM. 4	13.00" MAX OFFSET FROM DATUM FACE

PRODUCT REVISED
as complying with the Florida Building Code
NOA–No. 20-1102.09
Expiration Date 02/25/2026
By
Miami–Dade Product Control

FRANK BENNARDO, PE
PE# 0046549 CA# 9885
LICENSE
No 46549
STATE OF
PROFESSIONAL ENGINEER
OCT 22 2020

DIGITAL SEAL NOTICE:
IF THIS DOCUMENT IS DIGITALLY SIGNED, THIS SHEET IS PART OF A DIGITALLY SIGNED FILE. IT SHALL BE VERIFIED IN DIGITAL FORMAT, SHALL BE VERIFIED BY ELECTRONIC MEANS, & PRINTED COPIES OF THIS DOCUMENT ARE NOT CONSIDERED SIGNED AND SEALED.
PRINTED DOCUMENT NOTICE:
IF THIS DOCUMENT IS PRINTED & DOESN'T CONTAIN AN ENGINEER'S ORIGINAL SIGNATURE & SEAL, THIS DOCUMENT IS VOID & NOT VALID FOR USE. PHOTOCOPIES ARE NOT PERMITTED FOR USE.

ENGINEERING EXPRESS®
CORPORATE OFFICE:
160 SW 12th AVE, SUITE 106
DEERFIELD BEACH, FL 33442
(954) 354-0660 | (866) 396-9999
TEAM@ENGINEERINGEXPRESS.COM
ENGINEERINGEXPRESS.COM

RHEEM SALES COMPANY, INC.
1100 ABERNATHY ROAD SUITE 1400
ATLANTA, GA
(770) 351-3000

MECHANICAL UNIT
STEEL TIE-DOWN CLIPS
FLORIDA BUILDING CODE SEVENTH EDITION (2020)

REMARKS	DRWN	CHKD	DATE
INIT ISSUE	JAC	TSB	05/14/15
2017 FBC UPDATE	LAO	FLB	01/12/18
2020 FBC	CCB	RWN	10/19/20
	-	-	-
	-	-	-
	-	-	-

THIS DOCUMENT IS THE PROPERTY OF ENGINEERING EXPRESS, AND SHALL NOT BE REPRODUCED IN WHOLE OR IN PART WITHOUT WRITTEN CONSENT OF ENGINEERING EXPRESS. ALTERATIONS, ADDITIONS, OR OTHER MARKINGS TO THIS DOCUMENT ARE NOT PERMITTED AND INVALIDATE OUR CERTIFICATION.
COPYRIGHT ENGINEERING EXPRESS®

20-28800GD
SCALE: NTS UNLESS NOTED
4 OF 7

V:\Projects\20-28800 - NOA 18-0712.07 - Wind Load Cert of Mechanical Unit\WP\2020 FBC\140 - 20-28800 - NOA18-0719.07 - DWGp1-4.dwg
10/22/2020 - 3:21pm ricky

RHEEM SALES COMPANY, INC.

WIND LOAD CERTIFICATION OF MECHANICAL UNIT CABINETRY AND STEEL TIE-DOWN CLIPS: ROOF MOUNTED APPLICATIONS

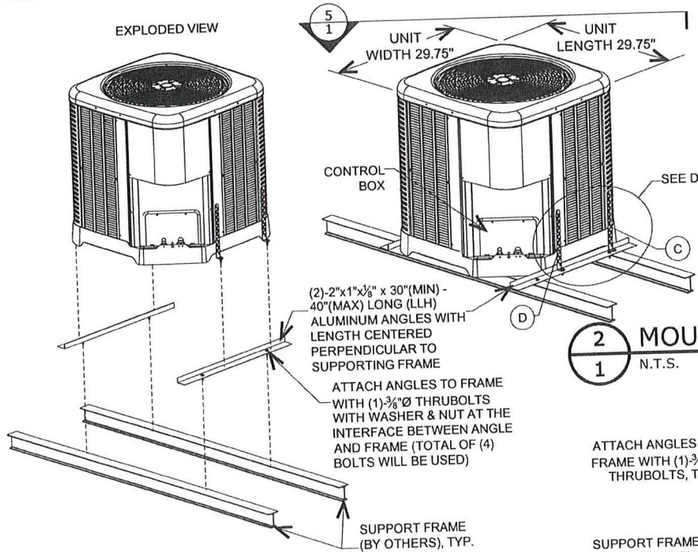

1/1 MOUNT EXPLODED VIEW
N.T.S. FRONT ISOMETRIC

THESE ISOMETRICS ARE INTENDED FOR DIAGRAMMATICAL PURPOSES ONLY; ALTERNATE RHEEM UNITS LISTED VARY IN APPEARANCE

2/1 MOUNT ISOMETRIC VIEW
N.T.S. FRONT ISO / BACK ISO

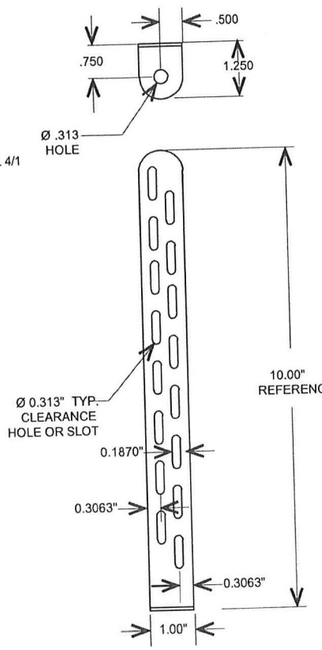

TIE-DOWN CLIP

MIAMI TECH CLIP: 14GA (0.07") ASTM A653 Fu=90 KSI STEEL (CUTD10), MIAMI TECH KIT # RRCUTD30K

3/1 SUPPORT ANGLE
N.T.S. ELEVATION

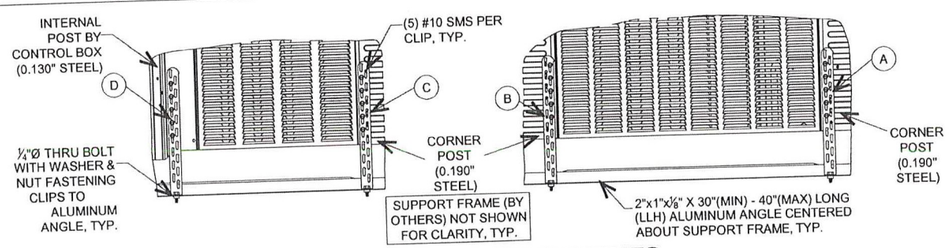

4/1 TIE-DOWN CLIP ATTACHMENTS
N.T.S. ELEVATIONS

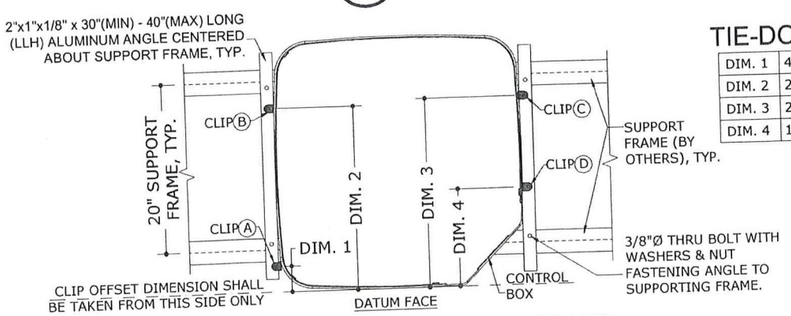

TIE-DOWN CLIP OFFSETS:

DIM. 1	4.50" MAX OFFSET FROM DATUM FACE
DIM. 2	24.50" MIN OFFSET FROM DATUM FACE
DIM. 3	25.25" MIN OFFSET FROM DATUM FACE
DIM. 4	13" MAX OFFSET FROM DATUM FACE

5/1 TIE-DOWN CLIP LAYOUT
N.T.S. PLAN

NOTE: UNIT SHALL BE CENTERED ABOUT THE 20" RAIL TO RAIL SUPPORTING FRAME (BY OTHERS)

PRODUCT REVISED
as complying with the Florida Building Code
NOA–No. 20-1102.09
Expiration Date 02/25/2026
By
Miami-Dade Product Control

VISIT ECALC.IO/28800
FOR SITE SPECIFIC DEVIATIONS & MORE INFORMATION ABOUT THIS DOCUMENT OR SCAN THIS QR CODE
VISIT ENGINEERINGEXPRESS.COM/RHEEM FOR ADDITIONAL PLANS, REPORTS & RESOURCES

APPROVED DESIGN CRITERIA:

APPROVED DESIGN CRITERIA:	
	200 PSF LATERAL WIND LOAD
	100 PSF UPLIFT WIND LOAD (CONCURRENT)

DESIGN NOTES:

SITE-SPECIFIC PRESSURE REQUIREMENTS AS DETERMINED IN ACCORDANCE WITH ASCE 7 AND CHAPTER 16 OF THE FLORIDA BUILDING CODE SHALL BE LESS THAN OR EQUAL TO THE DESIGN PRESSURE CAPACITY VALUES LISTED HEREIN FOR ANY ASSEMBLY AS SHOWN. DESIGN PRESSURE REQUIREMENTS SHALL BE DETERMINED BY A REGISTERED DESIGN PROFESSIONAL ON A JOB-SPECIFIC BASIS IN ACCORDANCE WITH THE GOVERNING CODE.

GENERAL NOTES:

1. THIS SYSTEM HAS BEEN DESIGNED AND SHALL BE FABRICATED IN ACCORDANCE WITH THE REQUIREMENTS OF THE FLORIDA BUILDING CODE SEVENTH EDITION (2020). THIS SYSTEM MAY BE USED WITHIN AND OUTSIDE THE HIGH VELOCITY HURRICANE ZONE. THIS DESIGN IS NOT INTENDED TO CERTIFY IMPACT RESISTANCE OF THE MECHANICAL UNIT CABINETRY.
2. NO 33-1/3% INCREASE IN ALLOWABLE STRESS HAS BEEN USED IN THE DESIGN OF THIS SYSTEM.
3. DESIGN & CERTIFICATION OF THE UNIT CABINETRY IS APPROVED THROUGH TEST REPORT#0323.01-15 BY AMERICAN TEST LAB OF SOUTH FLORIDA.
4. ALL DIMENSIONS AND THE MINIMUM WEIGHT (120 LB MINIMUM) OF MECHANICAL UNIT SHALL CONFORM TO LIMITATIONS STATED HEREIN. ALL MECHANICAL SPECIFICATIONS (CLEAR SPACE, TONNAGE, ETC.) SHALL BE AS PER MANUFACTURER RECOMMENDATIONS AND ARE THE EXPRESS RESPONSIBILITY OF THE CONTRACTOR.
5. ALL SHEET METAL SCREWS USED TO FASTEN CLIPS TO MECHANICAL UNITS SHALL BE #10 (14 MIN THREADS PER INCH) GRADE 5 STEEL OR EQUIVALENT ONLY. BOLTS USED TO FASTEN ALUMINUM ANGLES TO SUPPORTING FRAME (BY OTHERS) SHALL BE ASTM F593 410 STAINLESS STEEL OR EQUIVALENT AND SHALL UTILIZE SAE GRADE WASHERS & NUTS. PROVIDE (5) PITCHES MINIMUM PAST THE THREAD PLANE FOR SHEET METAL SCREWS. ALL FASTENERS SHALL HAVE APPROPRIATE CORROSION PROTECTION TO PREVENT ELECTROLYSIS. ALL FASTENER CONNECTIONS TO ALUMINUM SHALL PROVIDE 2xDIAMETER EDGE DISTANCE.
6. ALUMINUM ANGLES SPECIFIED HEREIN SHALL BE 6061-T6 ALUMINUM ONLY.
7. CONNECTIONS TO THE SUPPORTING FRAME (BY OTHERS) CONSIDER A FRAME MEMBER THAT IS 6061-T6 MIN ALUMINUM WITH A MINIMUM 0.094" THICK FLANGE AT ATTACHMENT POINT. PERFORMANCE OF THE RAIL AS A STRUCTURAL MEMBER TO SUPPORT THE UNIT ASSEMBLY SHALL BE PER SEPARATE CERTIFICATION.
8. THE CONTRACTOR IS RESPONSIBLE TO INSULATE ALL MEMBERS FROM DISSIMILAR MATERIALS TO PREVENT ELECTROLYSIS.
9. ELECTRICAL GROUND, WHEN REQUIRED, TO BE DESIGNED & INSTALLED BY OTHERS.
10. THE ADEQUACY OF ANY EXISTING STRUCTURE TO WITHSTAND SUPERIMPOSED LOADS SHALL BE VERIFIED BY THE ONSITE DESIGN PROFESSIONAL AND IS NOT INCLUDED IN THIS CERTIFICATION.EXCEPT AS EXPRESSLY PROVIDED HEREIN, NO ADDITIONAL CERTIFICATIONS OR AFFIRMATIONS ARE INTENDED.
11. THE SYSTEM DETAILED HEREIN IS GENERIC AND DOES NOT PROVIDE INFORMATION FOR A SPECIFIC SITE. FOR SITE CONDITIONS DIFFERENT FROM THE CONDITIONS DETAILED HEREIN, A LICENSED ENGINEER OR REGISTERED ARCHITECT SHALL PREPARE SITE SPECIFIC DOCUMENTS FOR USE IN CONJUNCTION WITH THIS DOCUMENT.
12. WATER-TIGHTNESS OF EXISTING HOST SUBSTRATE SHALL BE THE FULL RESPONSIBILITY OF THE INSTALLING CONTRACTOR. CONTRACTOR SHALL ENSURE THAT ANY REMOVED OR ALTERED WATERPROOFING MEMBRANE IS RESTORED AFTER FABRICATION AND INSTALLATION OF STRUCTURE PROPOSED HEREIN. THIS ENGINEER SHALL NOT BE RESPONSIBLE FOR ANY WATERPROOFING OR LEAKAGE ISSUES WHICH MAY OCCUR AS WATER-TIGHTNESS SHALL BE THE FULL RESPONSIBILITY OF THE INSTALLING CONTRACTOR.

FRANK BENNARDO, PE
PE# 0046549 CA# 9885
FRANK L. BENNARDO LICENSE No. 46549 STATE OF FLORIDA PROFESSIONAL ENGINEER
OCT 22 2020

DIGITAL SEAL NOTICE: IF THIS DOCUMENT IS DIGITALLY SIGNED, THIS SHEET IS PART OF A DIGITALLY SIGNED FILE. IT SHALL REMAIN IN DIGITAL FORMAT, SHALL BE VERIFIED BY ELECTRONIC MEANS, & PRINTED COPIES OF THIS DOCUMENT ARE NOT CONSIDERED SIGNED AND SEALED.
PRINTED DOCUMENT NOTICE: IF THIS DOCUMENT IS PRINTED & DOESN'T CONTAIN AN ENGINEER'S ORIGINAL SIGNATURE & SEAL, THIS DOCUMENT IS VOID & NOT VALID FOR USE. PHOTOCOPIES ARE NOT PERMITTED FOR USE.

ENGINEERING EXPRESS®
CORPORATE OFFICE:
160 SW 12th AVE, SUITE 106
DEERFIELD BEACH, FL 33442
(954) 354-0660 | (866) 396-9999
TEAM@ENGINEERINGEXPRESS.COM
ENGINEERINGEXPRESS.COM

RHEEM SALES COMPANY, INC.
1100 ABERNATHY ROAD SUITE 1400
ATLANTA, GA
(770) 351-3000

MECHANICAL UNIT
STEEL TIE-DOWN CLIPS
FLORIDA BUILDING CODE SEVENTH EDITION (2020)

REMARKS	DRWN	CHKD	DATE
INIT ISSUE	JAC	TSB	05/14/15
2017 FBC UPDATE	LAO	FLB	01/12/18
2020 FBC	CCB	RWN	10/19/20
	-	-	-
	-	-	-
	-	-	-

THIS DOCUMENT IS THE PROPERTY OF ENGINEERING EXPRESS, AND SHALL NOT BE REPRODUCED IN WHOLE OR PART WITHOUT WRITTEN CONSENT OF ENGINEERING EXPRESS. ALTERATIONS, ADDITIONS OR OTHER MARKINGS TO THIS DOCUMENT ARE NOT PERMITTED, AND INVALIDATE OUR CERTIFICATION.
COPYRIGHT ENGINEERING EXPRESS®

20-28800RE

SCALE: NTS UNLESS NOTED

5 OF 7

V:\Projects\20-28800 - NOA 18-07.12.07 - Wind Load Cert of Mechanical Unit\WP\2020 FBC\40 - 20-28800 - NOA18-07.19.07 - DWG\05-7.dwg
10/22/2020 - 3:25pm rickn

RHEEM SALES COMPANY, INC.

WIND LOAD CERTIFICATION OF MECHANICAL UNIT CABINETRY AND STEEL TIE-DOWN CLIPS: ROOF MOUNTED APPLICATIONS

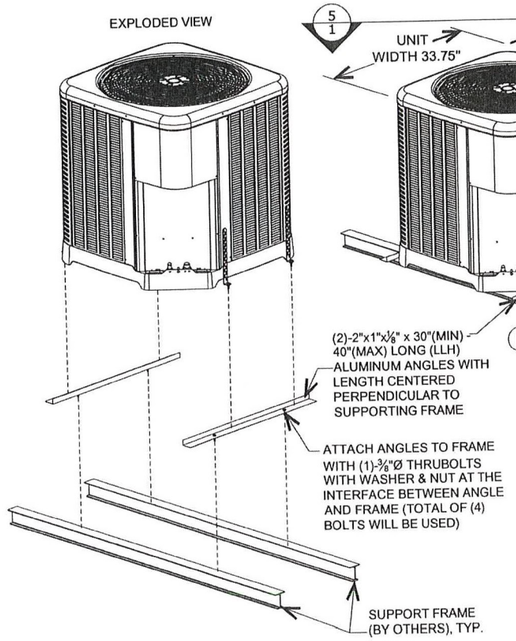

1/1 MOUNT EXPLODED VIEW
N.T.S. FRONT ISOMETRIC

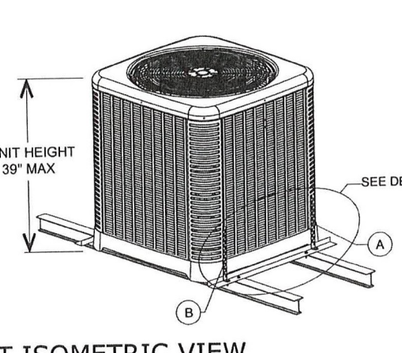

2/1 MOUNT ISOMETRIC VIEW
N.T.S. FRONT ISO / BACK ISO

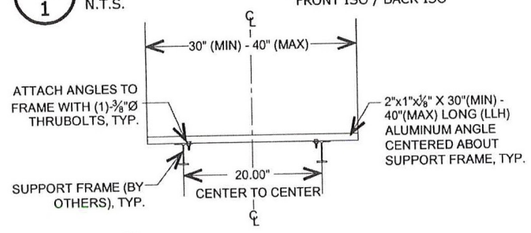

3/1 SUPPORT ANGLE
N.T.S. ELEVATION

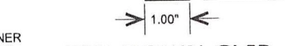

TIE-DOWN CLIP

MIAMI TECH CLIP: 12GA (0.09") ASTM A653 Fu=90 KSI STEEL (CUTD14), MIAMI TECH KIT # RRCUTD34K

THESE ISOMETRICS ARE INTENDED FOR DIAGRAMMATICAL PURPOSES ONLY; ALTERNATE RHEEM UNITS MAY VARY IN APPEARANCE

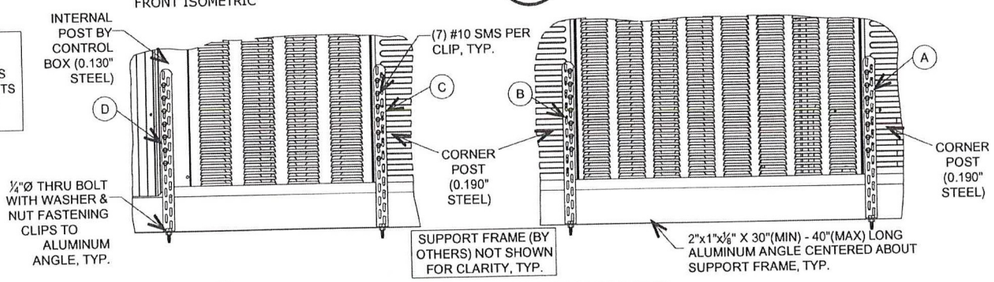

4/1 TIE-DOWN CLIP ATTACHMENTS
N.T.S. ELEVATIONS

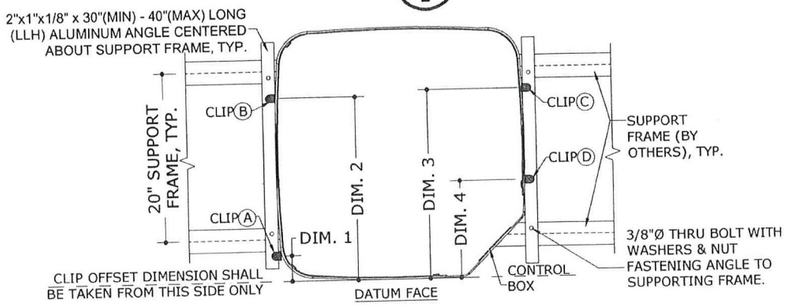

5/1 TIE-DOWN CLIP LAYOUT
N.T.S. PLAN

NOTE: UNIT SHALL BE CENTERED ABOUT THE 20" RAIL TO RAIL SUPPORTING FRAME (BY OTHERS)

TIE-DOWN CLIP OFFSETS:

DIM. 1	4.50" MAX OFFSET FROM DATUM FACE
DIM. 2	28.00" MIN OFFSET FROM DATUM FACE
DIM. 3	29.00" MIN OFFSET FROM DATUM FACE
DIM. 4	13.00" MAX OFFSET FROM DATUM FACE

PRODUCT REVISED
as complying with the Florida Building Code
NOA-No. 20-1102.09
Expiration Date 02/25/2026
By
Miami-Dade Product Control

FRANK BENNARDO, PE
PE # 0046549 CA# 9885
LICENSE 46549 STATE OF FLORIDA PROFESSIONAL ENGINEER
OCT 22 2020

DIGITAL SEAL NOTICE:
IF THIS DOCUMENT IS DIGITALLY SIGNED, THIS SHEET IS PART OF A DIGITALLY SIGNED FILE. IT SHALL REMAIN IN DIGITAL FORMAT, SHALL BE VERIFIED BY ELECTRONIC MEANS. PRINTED COPIES OF THIS DOCUMENT ARE NOT CONSIDERED SIGNED AND SEALED.
PRINTED DOCUMENT NOTICE:
IF THIS DOCUMENT IS PRINTED & DOESN'T CONTAIN AN ENGINEER'S ORIGINAL SIGNATURE & SEAL, THIS DOCUMENT IS VOID & NOT VALID FOR USE. PHOTOCOPIES ARE NOT PERMITTED FOR USE.

ENGINEERING EXPRESS®
CORPORATE OFFICE:
160 SW 12th AVE, SUITE 106
DEERFIELD BEACH, FL 33442
(954) 354-0660 | (866) 396-9999
TEAM@ENGINEERINGEXPRESS.COM
ENGINEERINGEXPRESS.COM

RHEEM SALES COMPANY, INC.
1100 ABERNATHY ROAD SUITE 1400
ATLANTA, GA
(770) 351-3000

MECHANICAL UNIT
STEEL TIE-DOWN CLIPS
FLORIDA BUILDING CODE SEVENTH EDITION (2020)

REMARKS	DRWN	CHKD	DATE
INIT ISSUE	JAC	TSB	05/14/15
2017 FBC UPDATE	LAO	FLB	01/12/18
2020 FBC	CCB	RWN	10/19/20
-	-	-	-
-	-	-	-

THIS DOCUMENT IS THE PROPERTY OF ENGINEERING EXPRESS, AND SHALL NOT BE REPRODUCED IN WHOLE OR PART WITHOUT WRITTEN CONSENT OF ENGINEERING EXPRESS. ALTERATIONS, ADDITIONS, OR OTHER MARKINGS TO THIS DOCUMENT ARE NOT PERMITTED AND INVALIDATE OUR CERTIFICATION.
COPYRIGHT ENGINEERING EXPRESS®

20-28800RE

SCALE: NTS UNLESS NOTED

6 OF 7

V:\Projects\20-28800 - NOA 18-0712.07 - Wind Load Cert of Mechanical Unit\WP\2020 FBC\40 - 20-28800 - NOA18-0719.07 - DWGp5-7.dwg
10/22/2020 - 3:26pm rickn

RHEEM SALES COMPANY, INC.

WIND LOAD CERTIFICATION OF MECHANICAL UNIT CABINETRY AND STEEL TIE-DOWN CLIPS: ROOF MOUNTED APPLICATIONS

EXPLODED VIEW

THESE ISOMETRICS ARE INTENDED FOR DIAGRAMMATICAL PURPOSES ONLY; ALTERNATE RHEEM UNITS MAY VARY IN APPEARANCE

UNIT WIDTH 35.75"

UNIT LENGTH 35.75"

ADD (2) #10 X 3/4 STAINLESS STEEL SCREWS TO CONTROL BOX COVER SIDES (39"-51" TALL MODELS ONLY)

SEE DETAIL 4/1

(2)-3"x3"x¼" x 30"(MIN) - 40"(MAX) LONG ALUMINUM ANGLES WITH LENGTH CENTERED PERPENDICULAR TO SUPPORTING FRAME

ATTACH ANGLES TO FRAME WITH (1)-⅜"Ø THRUBOLTS WITH WASHER & NUT AT THE INTERFACE BETWEEN ANGLE AND FRAME (TOTAL OF (4) BOLTS WILL BE USED)

SUPPORT FRAME (BY OTHERS), TYP.

5/1

1/1 MOUNT EXPLODED VIEW
N.T.S. FRONT ISOMETRIC

UNIT HEIGHT 51" MAX.

SEE DETAIL 4/1

2/1 MOUNT ISOMETRIC VIEW
N.T.S. FRONT ISO / BACK ISO

30" (MIN) - 40" (MAX)

ATTACH ANGLES TO FRAME WITH (1)-⅜"Ø THRUBOLTS. **SEE GENERAL NOTES FOR ADDITIONAL REINFORCING PLATE USED AT THIS LOCATION, TYP.**

3"x3"x¼" x 30"(MIN) - 40"(MAX) LONG ALUMINUM ANGLE CENTERED ABOUT SUPPORT FRAME, TYP.

SUPPORT FRAME (BY OTHERS), TYP.

20.00" MINIMUM CENTER TO CENTER

6/1

3/1 SUPPORT ANGLE
N.T.S. ELEVATION

.500

.750

1.250

Ø .313 HOLE

0.1870"

Ø 0.313"Ø CLEARANCE HOLE OR SLOT

14.00" REFERENCE

0.3063"

0.3063"

1.00"

TIE-DOWN CLIP

MIAMI TECH CLIP: 12GA (0.09") ASTM A653 Fu=90 KSI STEEL (CUTD14), MIAMI TECH KIT # RRCUTD36K

INTERNAL POST BY CONTROL BOX (0.130" STEEL)

(7) #10 SMS PER CLIP, TYP.

CORNER POST (0.190" STEEL)

CORNER POST (0.190" STEEL)

¼"Ø THRU BOLT WITH WASHER & NUT FASTENING CLIPS TO ALUMINUM ANGLE, TYP.

SUPPORT FRAME (BY OTHERS) NOT SHOWN FOR CLARITY, TYP.

3"x3"x¼" X 30"(MIN) - 40"(MAX) LONG ALUMINUM ANGLE CENTERED ABOUT SUPPORT FRAME, TYP.

4/1 TIE-DOWN CLIP ATTACHMENTS
N.T.S. ELEVATIONS

3"x3"x1/8" x 30"(MIN) - 40"(MAX) LONG ALUMINUM ANGLE CENTERED ABOUT SUPPORT FRAME, TYP.

20" SUPPORT FRAME, TYP.

CLIP Ⓐ

CLIP Ⓑ

CLIP Ⓒ

CLIP Ⓓ

DIM. 1

DIM. 2

DIM. 3

DIM. 4

SUPPORT FRAME (BY OTHERS), TYP.

3/8"Ø THRU BOLT WITH WASHERS & NUT FASTENING ANGLE TO SUPPORTING FRAME.

CONTROL BOX

CLIP OFFSET DIMENSION SHALL BE TAKEN FROM THIS SIDE ONLY

DATUM FACE

5/1 TIE-DOWN CLIP LAYOUT
N.T.S. PLAN

NOTE: UNIT SHALL BE CENTERED ABOUT THE 20" RAIL TO RAIL SUPPORTING FRAME (BY OTHERS)

TIE-DOWN CLIP OFFSETS:

DIM. 1	4.50" MAX OFFSET FROM DATUM FACE
DIM. 2	30.00" MIN OFFSET FROM DATUM FACE
DIM. 3	31.00" MIN OFFSET FROM DATUM FACE
DIM. 4	13.00" MAX OFFSET FROM DATUM FACE

3"x3"x¼" ANGLE, TYP.

0.75"

0.125"

0.216" MIN.

1"x3"x¼" REINFORCEMENT PLATE AT THE UNDERSIDE OF THE FLANGE FOR AN OVERALL FLANGE THICKNESS OF 0.216"MIN, TYP.

SUPPORTING FRAME (BY OTHERS), TYP.

6/1 REINFORCING PLATE
6" = 1'-0" SECTION

PRODUCT REVISED
as complying with the Florida Building Code
NOA–No. 20-1102.09
Expiration Date 02/25/2026
By
Miami–Dade Product Control

PE# 0046549 CA# 9885

FRANK V. BENNARDO LICENSE No. 46549 STATE OF FLORIDA PROFESSIONAL ENGINEER OCT 2 2020

DIGITAL SEAL NOTICE: IF THIS DOCUMENT IS DIGITALLY SIGNED, THIS SHEET IS PART OF A DIGITALLY SIGNED FILE. IT SHALL REMAIN IN DIGITAL FORMAT, SHALL BE VERIFIED BY ELECTRONIC MEANS, & PRINTED COPIES OF THIS DOCUMENT ARE NOT CONSIDERED SIGNED AND SEALED.

PRINTED DOCUMENT NOTICE: IF THIS DOCUMENT IS PRINTED & DOESN'T CONTAIN AN ENGINEER'S ORIGINAL SIGNATURE & SEAL, THIS DOCUMENT IS VOID & NOT VALID FOR USE. PHOTOCOPIES ARE NOT PERMITTED FOR USE.

ENGINEERING EXPRESS®
CORPORATE OFFICE:
160 SW 12th AVE, SUITE 106
DEERFIELD BEACH, FL 33442
(954) 354-0660 | (866) 396-9999
TEAM@ENGINEERINGEXPRESS.COM
ENGINEERINGEXPRESS.COM

RHEEM SALES COMPANY, INC.
1100 ABERNATHY ROAD SUITE 1400
ATLANTA, GA
(770) 351-3000

MECHANICAL UNIT
STEEL TIE-DOWN CLIPS
FLORIDA BUILDING CODE SEVENTH EDITION (2020)

REMARKS	DRWN	CHKD	DATE
INIT ISSUE	JAC	TSB	05/14/15
2017 FBC UPDATE	LAO	FLB	01/12/18
2020 FBC	CCB	RWN	10/19/20
	-	-	-
	-	-	-

THIS DOCUMENT IS THE PROPERTY OF ENGINEERING EXPRESS, AND SHALL NOT BE REPRODUCED IN WHOLE OR PART WITHOUT WRITTEN CONSENT OF ENGINEERING EXPRESS. ALTERATIONS, ADDITIONS, OR OTHER MARKINGS TO THIS DOCUMENT ARE NOT PERMITTED AND INVALIDATE OUR CERTIFICATION.

COPYRIGHT ENGINEERING EXPRESS®

20-28800RE

SCALE: NTS UNLESS NOTED

7 OF 7

V:\Projects\20-28800 - NOA 18-0712.07 - Wind Load Cert of Mechanical Unit\WP\2020 FBC\40 - 20-28800 - NOA18-0719.07 - DWG\p5-7.dwg
10/22/2020 - 3:26pm rickn

Ordered By:



Zendegui Law Group
1111 Kane Concourse, Suite 310, Bay Harbor Islands, FL 33154
(305) 579-3333 | Fax (305) 579-3330 | www.gdzlaw.com

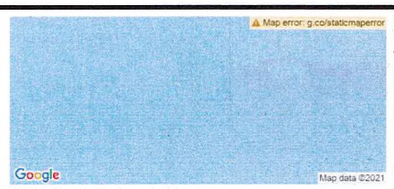



This survey shall not be used for construction/permitting purposes without written consent from the land surveyor who has signed and sealed this survey.

CITY OF MIAMI SPRINGS
BUILDING DEPARTMENT

DEC 14 2021

RECEIVED

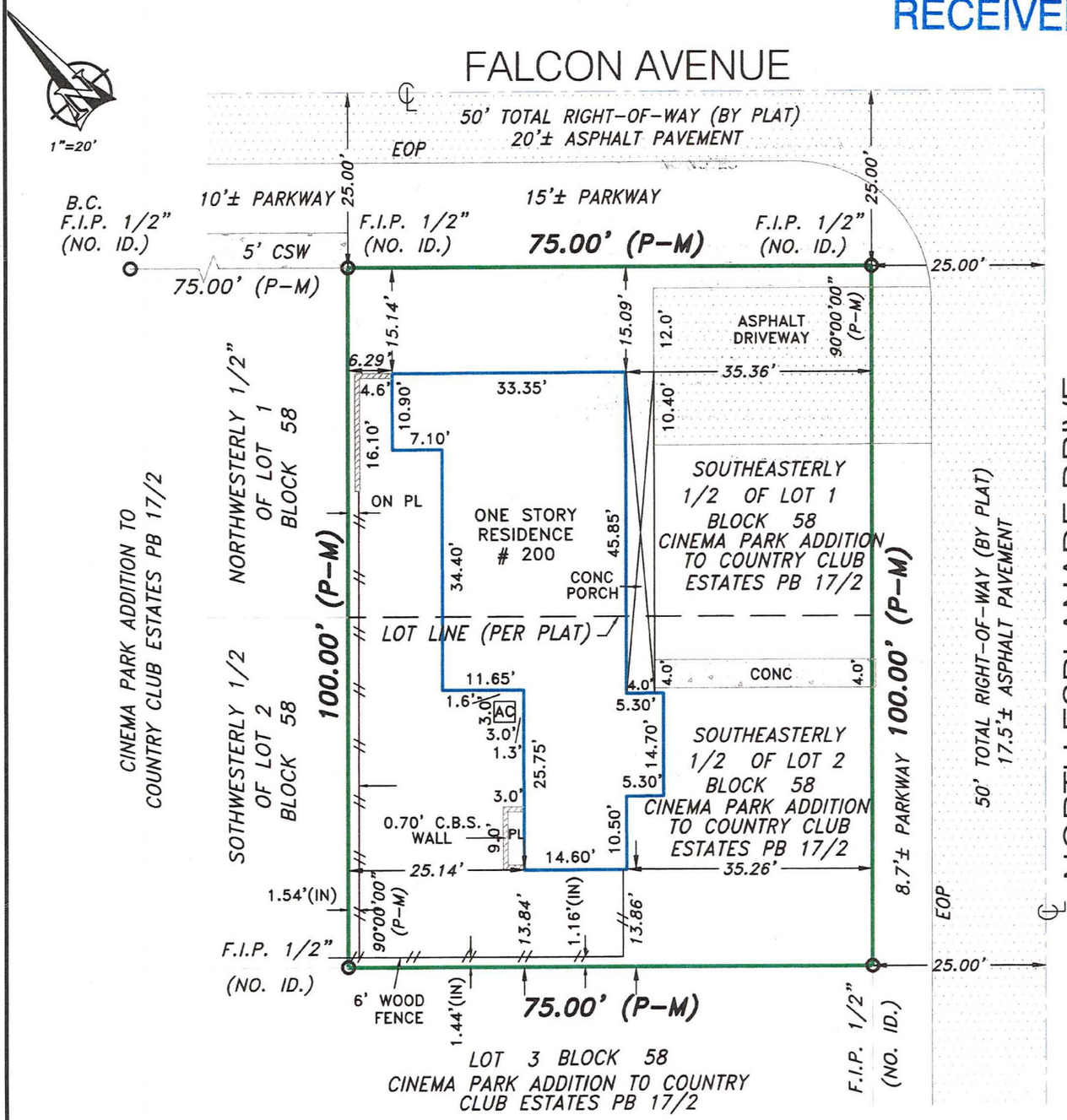

Accepted By: _____

Property Address:
200 N. Esplanade Drive
Miami Springs, FLORIDA 33166

Notes: NO NOTES

SURVEYOR'S CERTIFICATION: I HEREBY CERTIFY THAT THIS BOUNDARDY SURVEY IS A TRUE AND CORRECT REPRESENTATION OF A SURVEY PREPARED UNDER MY DIRECTION. THIS COMPLIES WITH THE MINIMUM TECHNICAL STANDARDS AS SET FORTH BY THE STATE OF FLORIDA BOARD OF PROFESSIONAL LAND SURVEYOR'S IN CHAPTERS 5J-17.051 THROUGH 5J-17.052, FLORIDA ADMNISTRATIVE CODE PURSUANT TO 427 027 FLORIDA STATUTES.

SIGNED _____ FOR THE FIRM
FERNANDO FERNANDEZ
STATE OF FLORIDA P.S.M. NO. 6765

LICENSED SURVEYOR AND MAPPER
NO. 6765
07/29/2021
STATE OF FLORIDA
PROFESSIONAL SURVEYOR AND MAPPER

NOT VALID WHITOUT AN AUTHENTIC ELECTRONIC SIGNATURE AND AUTHENTICATED ELECTRONIC SEAL AND OR THIS MAP IS NOT VALID WITHOUT THE SIGNATURE AND THE ORIGINAL RAISED SEAL OF A LICENSED SURVEYOR AND MAPPER.

M.E. Land Surveying, Inc.
10665 SW 190th Street
Suite 3110
Miami, FL 33157
Phone: (305) 740-3319
Fax: (305) 669-3190
LB#: 7989

ME LAND

Surveyor's Legend

CITY OF MIAMI SPRINGS
BUILDING DEPARTMENT
DEC 14 2021
RECEIVED

	PROPERTY LINE						
	STRUCTURE	FND	FOUND IRON PIPE / PIN AS NOTED ON PLAT	B.R.	BEARING REFERENCE	TEL.	TELEPHONE FACILITIES
	CONC. BLOCK WALL	△	CENTRAL ANGLE OR DELTA			U.P.	UTILITY POLE
X X	CHAIN-LINK FENCE OR WIRE FENCE	LB#	LICENSE # - BUSINESS	R	RADIUS OR RADIAL	E.U.B.	ELECTRIC UTILITY BOX
	WOOD FENCE	LS#	LICENSE # - SURVEYOR	RAD.	RADIAL TIE	SEP.	SEPTIC TANK
	IRON FENCE	CALC	CALCULATED POINT	N.R.	NON RADIAL	D.F.	DRAINFIELD
	EASEMENT	SET	SET PIN	TYP.	TYPICAL	A/C	AIR CONDITIONER
	CENTER LINE	▲	CONTROL POINT	I.R.	IRON ROD	S/W	SIDEWALK
	WOOD DECK	■	CONCRETE MONUMENT	I.P.	IRON PIPE	DWY	DRIVEWAY
	CONCRETE	◒	BENCHMARK	N&D	NAIL & DISK	SCR.	SCREEN
	ASPHALT	ELEV	ELEVATION	PK NAIL	PARKER-KALON NAIL	GAR	GARAGE
	BRICK / TILE	P.T.	POINT OF TANGENCY	D.H.	DRILL HOLE	ENCL.	ENCLOSURE
	WATER	P.C.	POINT OF CURVATURE	Ⓦ	WELL	N.T.S.	NOT TO SCALE
	APPROXIMATE EDGE OF WATER	P.R.M.	PERMANENT REFERENCE MONUMENT		FIRE HYDRANT	F.F.	FINNISHED FLOOR
	COVERED AREA	P.C.C.	POINT OF COMPOUND CURVATURE	Ⓜ M.H.	MANHOLE	T.O.B.	TOP OF BANK
		P.R.C.	POINT OF REVERSE CURVATURE	O.H.L.	OVERHEAD LINES	E.O.W.	EDGE OF WATER
	TREE	P.O.B.	POINT OF BEGINNING	TX	TRANSFORMER	E.O.P	EDGE OF PAVEMENT
	POWER POLE	P.O.C.	POINT OF COMMENCEMENT	CATV	CABLE TV RISER	C.V.G.	CONCRETE VALLEY GUTTER
	CATCH BASIN	P.C.P.	PERMANENT CONTROL POINT	W.M.	WATER METER	B.S.L.	BUILDING SETBACK LINE
C.U.E.	COUNTY UTILITY EASEMENT	M	FIELD MEASURED	P/E	POOL EQUIPMENT	S.T.L.	SURVEY TIE LINE
I.E./E.E.	INGRESS / EGRESS EASEMENT	P	PLATTED MEASUREMENT	CONC.	CONCRETE SLAB	℄	CENTER LINE
U.E.	UTILITY EASEMENT	D	DEED	ESMT	EASEMENT	R/W	RIGHT-OF-WAY
		C	CALCULATED	D.E.	DRAINAGE EASEMENT	P.U.E.	PUBLIC UTILITY EASEMENT
		L.M.E.	LAKE OR LANDSCAPE MAINT. ESMT.	L.B.E.	LANDSCAPE BUFFER EASEMENT	C.M.E.	CANAL MAINTENANCE EASEMENT
		R.O.E.	ROOF OVERHANG EASEMENT	L.A.E.	LIMITED ACCESS EASEMENT	A.E.	ANCHOR EASEMENT

Property Address:

200 N. Esplanade Drive
Miami Springs, FLORIDA 33166

Flood Information:

Community Number: MIAMI SPRINGS/ 120653
Panel Number: 12086C0283
Suffix: L
Date of Firm Index: 09/11/2009
Flood Zone: AH
Base Flood Elevation: 7.0'
Date of Field Work: 07/27/2021
Date of Completion: 07/29/2021

General Notes:

1.) The Legal Description used to perform this survey was supplied by others. This survey does not determine or is not to imply ownership
2.) This survey only shows above ground improvements. Underground utilities, footings, or encroachments are not located on this survey map
3.) The minimum relative distance accuracy for this type of Survey is 1 foot in 10,000 feet. The accuracy obtained by measurement and calculation of closed geometric figures was found to exceed this requirement. Well-identified features as depicted on the Survey Map were measure to an estimated horizontal positional accuracy of 1/10 foot.
4.) If there is a septic tank, well, or drain field on this survey, the location of such items was shown to us by others and the information was not verified.
5.) Examination of the abstract of title will have to be made to determine recorded instruments, if any, affect this property. The lands shown herein were not abstracted for easement or other recorded encumbrances not shown on the plat.
6.) Wall ties are done to the face of the wall.
7.) Fence ownership is not determined.
8.) Bearings referenced to line noted B.R also are assumed.
9.) Dimensions shown are platted and measured unless otherwise shown.
10.) No identification found on property corners unless noted.
11.) Not valid unless sealed with the signing surveyors embossed seal.
12.) Boundary survey means a drawing and/or graphic representation of the survey work performed in the field, could be drawn at a shown scale and/or not to scale.
13.) Elevations if shown are based upon NGVD 1929 unless otherwise noted.
14.) This is a BOUNDARY SURVEY unless otherwise noted.
15.) This survey is exclusive for the use of the parties to whom it is certified. The certifications do not extend to any unnamed parties.
16.) This survey shall not be used for construction/permitting purposes without written consent from the land surveyor who has signed and sealed this survey.

Legal Description:

Southeasterly 1/2 of Lots 1 and 2, Block 58, CINEMA PARK ADDITION TO COUNTRY CLUB ESTATES, according to the plat thereof, as recorded in Plat Book 17, Page 2, of the Public Records of Miami-Dade County, Florida.

Printing Instructions:

While viewing the survey in any PDF Reader, select the File Drop-down and select "Print". Select a color printer, if available; or at least one with 8.5" x 14" (legal) paper.
Select ALL for Print Range, and the # of copies you would like to print out.
Under the "Page Scaling" please make sure you have selected "None".
Do not check the "Auto-rotate and Center" box.
Check the "Choose Paper size by PDF" checkbox, then click OK to print.

Certified To:
Jovany Jimenez and Ambar Sara Preval
Zendegui Law Group, P.A.
Banking Mortgage Services; BMS Corp.and/or Secretary of Housing and Urban Development of Washington
its successors and/or assigns as their interest may appear.

Please copy below for policy preparation purposes only:

This policy does not insure against loss or damage by reason of the following exceptions: Any rights, easements, interests, or claims which may exist by reason of, or reflected by, the following facts shown on the survey prepared by *Fernando Fernandez* *, for M.E. Land Surveying Inc., dated* *07/29/2021* *bearing Job #* *B-99236* :

a. *NO NOTES*

M.E. Land Surveying, Inc.

10665 SW 190th Street, Suite 3110 Miami, FL 33157
Phone: (305) 740-3319
Fax: (305) 669-3190
LB#: 7989

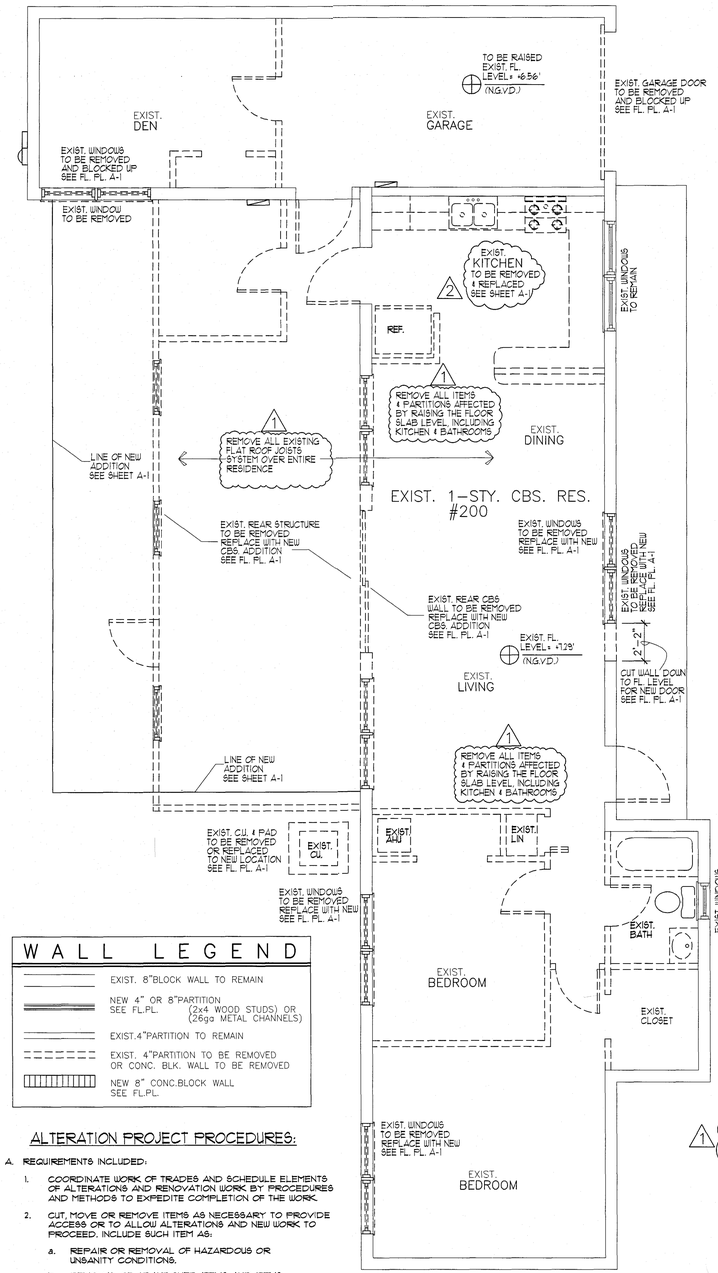

WALL LEGEND

- EXIST. 8"BLOCK WALL TO REMAIN
- NEW 4" OR 8"PARTITION SEE FL.PL. (2x4 WOOD STUDS) OR (26ga METAL CHANNELS)
- EXIST.4"PARTITION TO REMAIN
- EXIST. 4"PARTITION TO BE REMOVED OR CONC. BLK. WALL TO BE REMOVED
- NEW 8" CONC.BLOCK WALL SEE FL.PL.

ALTERATION PROJECT PROCEDURES:

A. REQUIREMENTS INCLUDED:

1. COORDINATE WORK OF TRADES AND SCHEDULE ELEMENTS OF ALTERATIONS AND RENOVATION WORK BY PROCEDURES AND METHODS TO EXPEDITE COMPLETION OF THE WORK.
2. CUT, MOVE OR REMOVE ITEMS AS NECESSARY TO PROVIDE ACCESS OR TO ALLOW ALTERATIONS AND NEW WORK TO PROCEED. INCLUDE SUCH ITEM AS:
   a. REPAIR OR REMOVAL OF HAZARDOUS OR UNSANITY CONDITIONS.
   b. REMOVAL OF ABANDONED ITEMS AND ITEMS SERVING NO USEFUL PURPOSE, SUCH AS ABANDONED PIPING, CONDUIT, AND WIRING.
   c. REMOVAL OF UNSUITABLE OR EXTRAGENEOUS MATERIALS NOT MARKED FOR SALVAGE, SUCH AS ABANDONED EQUIPMENT AND DEBRIS INCLUDING ROTTED WOOD, RUSTED METALS AND DETERIORATED CONCRETE.
3. ALTERATIONS AND CONNECTIONS OF NEW CONTRUCTION TO EXISTING CONSTRUCTION OCCUR AT DUST SENSITIVE AREAS, EXECUTE ALL MEASURES TO COMPLETELY CONTROL AND SEPARATE DUST FROM EXISTING AREA AND EQUIPMENT.

EXIST./DEMO FLOOR PLAN

SCALE: 1/4"=1'-0"

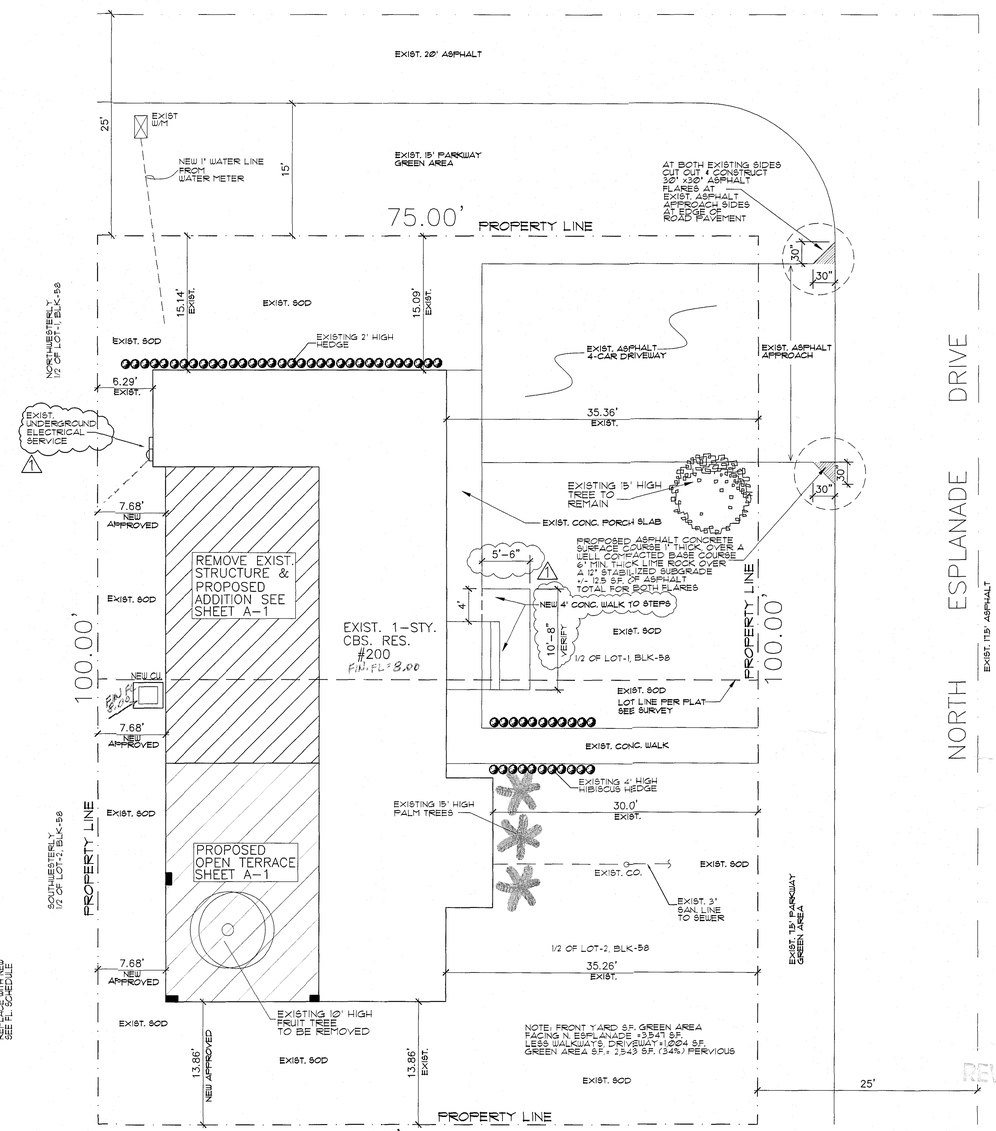

SITE PLAN

SCALE: 1/8"=1'-0"
SEE SURVEY

SCOPE OF WORK:

NOTE: THIS IS A EXISTING RESIDENCE WITH MOST OF IT BEING REMODELED.
ALSO THERE IS A PROPOSED ADDITION BEING ADDED TO THE REAR OF RESIDENCE.
REMOVE AND REPLACE ALL WINDOWS AND EXTERIOR DOORS AT EXISTING RESIDENCE.
REMOVE ALL EXIST. FLAT ROOF AND PROVIDE NEW TRUSS SYSTEM OVER ENTIRE STRUCTURE.
REMOVE ALL EXIST. PARTITIONS AND KITCHEN CABINETS (TO REINSTALL LATER).
REMOVE ALL EXIST. BATHROOMS DUE TO RAISING OF THE FLOOR SLAB. SEE D-1 & A-2
PROVIDE NEW ROOF FINISHES AT EXISTING AND NEW ADDITION UNDER A SEPARATE PERMIT.
ADDITION CONSISTS OF 2 NEW BEDROOMS & 2 NEW BATHROOMS WITH DEN.
REMOVE GARAGE DOOR AND BLOCK UP WITH WINDOW AT FRONT AS SHOWN ON A-1.
RELOCATE CERTAIN WINDOW & DOOR OPENINGS AND BLOCK UP OTHER WALL AREAS.
SEE FLOOR PLAN AND SECTIONS FOR NEW & EXIST. BLOCK WALLS & NEW TIE BEAMS.
PROVIDE NEW CONCRETE STARTER COLUMNS & CONC. BEAMS AS SHOWN ON PLAN.
WITH NEW WINDOWS/DOORS, & VERTICAL REBAR TIE COLUMNS AT NEW WALLS.
SEE PLAN FOR ALL NEW AND EXISTING CONDITIONS BEING ALTERED AND OR MODIFIED.
SEE MECHANICAL WORK AS PART OF THIS PERMIT.
SEE ELECTRICAL WORK AS PART OF THIS PERMIT.
SEE PLUMBING WORK AS PART OF THIS PERMIT.

LEGAL DESCRIPTION: FOLIO#=05-3118-016-1590

SELY 1/2 LOTS 1 & 2, BLOCK 58, OF "CINEMA PARK-COUNTRY CLUB ESTS ADDITION" PLAT BOOK 17, PAGE 2 AS RECORDED 13114-2660 1. OF THE PUBLIC RECORDS OF MIAMI DADE COUNTY.

NOTE: THE ARCHITECT OR ENGINEER OF RECORD IS NOT RESPONSIBLE FOR ANY UNEXPECTED OR UNFORESEEN OR HIDDEN EXISTING CONDITIONS THAT HAVE NOTHING TO DO WITH THE PROPOSED WORK. THESE ISSUES IF ANY WILL BE ADDRESSED SEPARATELY, AND ADDED TO THE SCOPE OF WORK.

NOTE: TRADE CONTRACTOR IS RESPONSIBLE FOR ANY COST EFFECTIVE REVISIONS TO PLANS IF ORIGINAL DESIGN OF APPROVED PLANS ARE NOT FOLLOWED. A DIFFERENT METHOD IN DESIGN MAY BE USED AFTER CONSTRUCTION & PERMIT DOCUMENTS ARE ACTIVE IN FIELD, BUT AGAIN TRADE CONTRACTOR WILL BE RESPONSIBLE FOR ANY INCURRED COSTS DUE TO ANY REQUIRED REVISION WORK ON THE ORIGINAL APPROVED PLANS. ANY AND ALL CHANGES TO PLANS MUST BE APPROVED BY THE ENGINEER OR ARCHITECT OF RECORD & BUILDING DEPT. AND WILL BE BILLED ACCORDINGLY.

CALL 48 HOURS BEFORE YOU DIG IN FLORIDA
IT'S THE LAW
1-800-432-4770
SUNSHINE STATE ONE CALL OF FLORIDA, INC.

1

FLOOD CRITERIA INFO:
FLOOD ZONE= AH
BASE FLOOD ELEVATION 7.0'
NEW FLOOR SLAB ELEVATION 8.0' (N.G.V.D.)
SEE ELEVATION CERTIFICATE ATTACHED.

ENVIRONMENTAL RESOURCES & LANDSCAPING TREES NOTES:

NOTE: (1) FRUIT TREE WILL BE REMOVED DURING CONSTRUCTION.
NOTE: FOR ANYOTHER NEARBY TREES THAT MAY BE AFFECTED BY THE NEW CONSTRUCTION PROTECT EXIST. TREES. PROVIDE 10'-12' BARRIES AROUND TREES TO REMAIN WITH A TEMPORARY PLYWD. PARTITIONS OR SAFETY MESH. ALL DAMAGED PLANT MATERIAL INCLUDING SOD MUST BE RESTORED PRIOR TO FINAL BUILDING INSPECTION.
ALL OTHER EXISTING SHRUBS & HEDGES INCLUDING SOD TO REMAIN AS IS.

DESIGN CRITERIA

CODE EDITION: 2020-7th EDITION FLORIDA BUILDING CODE AS PER CODE REFERENCE STANDARDS CHAPTER 35
CODE REFERENCES: ASCE/SEI 7-16, ACI 318-14, NDS 2018 AWC AF & PA-92, ASTM A615, ASTM D-698, & AITC, AISI S100-16,
MECHANICAL 2020-7th EDITION FLORIDA BUILDING CODE
ELECTRICAL 2020-7th EDITION FLORIDA BUILDING CODE
PLUMBING 2020-7th EDITION FLORIDA BUILDING CODE
NATIONAL ELECTRIC CODE (NEC 2017)
EXISTING BUILDINGS 2020-7th EDITION FLORIDA BUILDING CODE
FLORIDA FIRE PREVENTION CODE 2020 7th Edition
FLORIDA ACCESSIBILITY CODE 2020 7th Edition
ASCE/SEI 7-16 EXPOSURE CONDITION INDICATED=C
CONSTRUCTION TYPE VB UNPROTECTED
OCCUPANCY CLASSIFICATION R-3
ALTERATION LEVEL-3

I CERTIFY THIS IS BEING DESIGNED TO WITHSTAND 175 MPH WIND SPEED ACCORDING TO ASCE 7-16 AS REQUIRED BY THE FLORIDA BUILDING CODE REVISED 2020 EDITION 7th EDITION

ZONING LEGEND

ZONING CLASSIFICATION	SINGLE FAMILY RESIDENTIAL (R-1C) DISTRICT
TOTAL GROSS LOT AREA:	12,500 SQFT.
NET LOT AREA :	12,500 SQFT.
LOT COVERAGE REQUIRED:	40%
LOT COVERAGE PROVIDED	32%
other conc. impervious areas 850 SF. GREEN AREA TO REMAIN 4,275 SF.	34%
EXIST. BUILD'G. FT. PRINT	1,718 SQFT.
NEW ADDITIONAL S.F.	+ 189 SQFT.
EXIST. BEING REMOVED/REMODELED	- 404 SQFT.
TOTAL NEW UNDER A/C AREA S.F.	1,503 SQFT. A/C
NEW OPEN TERRACE S.F.	+ 461 SQFT.
(NEW TOTAL FT. PRINT S.F.)=	2,314 SQFT.

3 PARKING SPACES REQUIRED.
EXIST. CONC. DRIVEWAY FOR 4 CARS AT FRONT YARD.

SETBACKS REQUIRED:	
FRONT	30.00'
INTERIOR SIDE	7.50'
STREET SIDE	15.00'
REAR	25.00'
BETWEEN BUILDINGS	20.00'

SETBACKS PROVIDED:	
FRONT	15.09' EXIST. CONDITION APPV'D.
INTERIOR SIDE	7.61' PROPOSED
STREET SIDE	35.36' EXIST. CONDITION APPV'D.
REAR	13.86' MATCH EXIST. CONDITION APPV'D.
BETWEEN BUILDINGS	N/A

INDEX OF DRAWINGS

SP-1/D-1 SITE PLAN AND EXIST. & DEMO FLOOR PLAN
A-1 PROPOSED FLOOR PLANS, SCHED. & DETS.
A-2 FOUNDATIONS & STRUCTURAL SECTIONS/DETAILS
A-3 WINDOW SCHEDULES & DETAILS
A-4 PROPOSED ELEVATIONS
A-5 ROOF PLAN & STRUCTURAL DETAILS
A-6 ROOF DIAGRAM & OTHER DETAILS, NOTES.
M-1 MECHANICAL SHEET AND SCHEDULES, DETAILS
E-1 ELECTRICAL SHEET AND SCHEDULES, RISERS
P-1 PLUMBING SHEET AND DETAILS.
P-2 PLUMBING SHEET AND DETAILS.

CITY OF MIAMI SPRINGS
APPROVED
FOR PERMIT OF
INSPECTOR
INSPECTOR
DATE

OFFICE COPY
CITY OF MIAMI SPRINGS

SEPARATE PERMIT REQUIRED FOR ROOFING, PLUMBING ELECTRICAL, MECHANICAL, SHUTTERS, WINDOWS, DOORS AND DRIVEWAYS

NO.	DATE
1	2-22-22 REVISED TO RAISE EXIST. FL. LEVEL TO 8.0

DESIG. DRWN. CHKD. APPV. DATE

PROJECT NAME: ADDITION TO RESIDENCE FOR:
OWNER/PH: AMBAR PREVAL 786-587-7391
ADDRESS: 200 N. ESPLANADE DRIVE MIAMI SPRINGS, FLORIDA 33166
PROJECT ADD: SAME

Guillermo Ramon Gonzalez
9000 SW. 168th Avenue Miami Florida 33196 Ph:305-484-8171
Registered Architect #13960 Ph:786-237-5154 (assistant)

STATE OF FLORIDA
GUILLERMO RAMON GONZALEZ
AR0013960
REGISTERED ARCHITECT
Guillermo Ramon Gonzalez
R.A. 13960
STATE OF FLORIDA

101521

SP-1
D-1

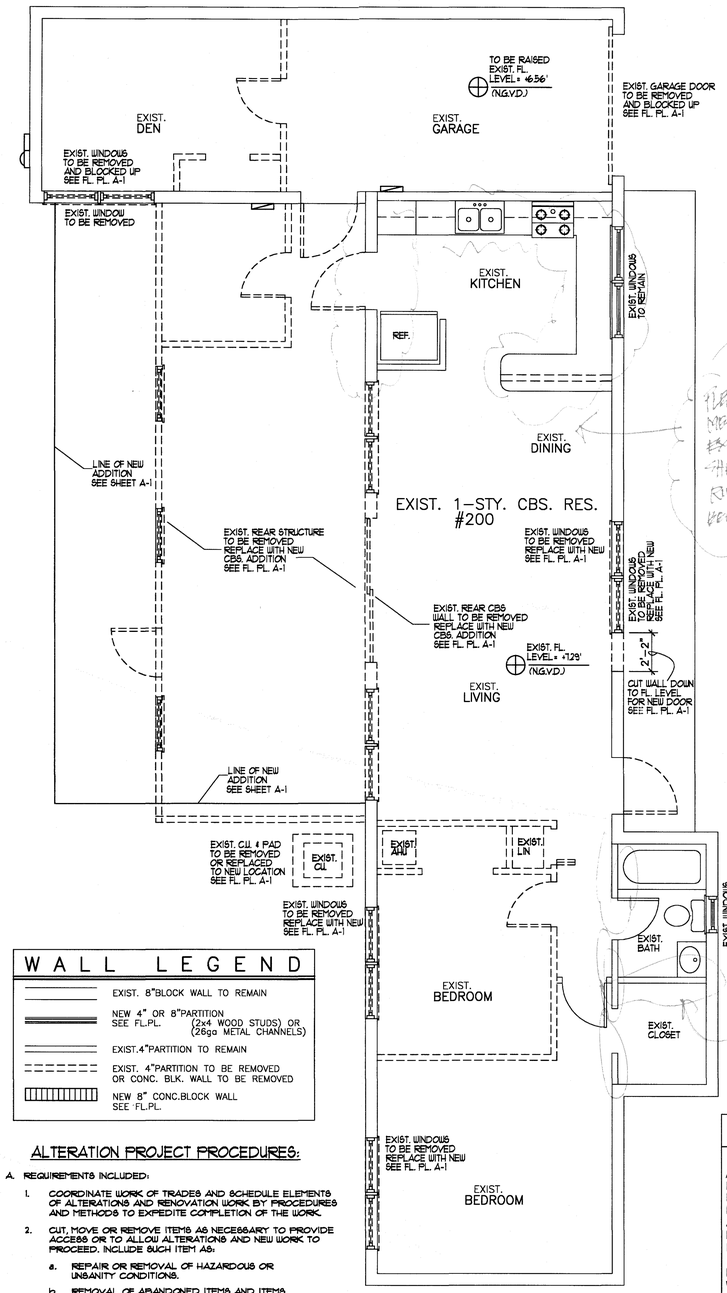

WALL LEGEND

- EXIST. 8"BLOCK WALL TO REMAIN
- NEW 4" OR 8"PARTITION SEE FL.PL. (2x4 WOOD STUDS) OR (26ga METAL CHANNELS)
- EXIST.4"PARTITION TO REMAIN
- EXIST. 4"PARTITION TO BE REMOVED OR CONC. BLK. WALL TO BE REMOVED
- NEW 8" CONC.BLOCK WALL SEE FL.PL.

ALTERATION PROJECT PROCEDURES:

A. REQUIREMENTS INCLUDED:

1. COORDINATE WORK OF TRADES AND SCHEDULE ELEMENTS OF ALTERATIONS AND RENOVATION WORK BY PROCEDURES AND METHODS TO EXPEDITE COMPLETION OF THE WORK.
2. CUT, MOVE OR REMOVE ITEMS AS NECESSARY TO PROVIDE ACCESS OR TO ALLOW ALTERATIONS AND NEW WORK TO PROCEED. INCLUDE SUCH ITEM AS:
   a. REPAIR OR REMOVAL OF HAZARDOUS OR UNSANITY CONDITIONS.
   b. REMOVAL OF ABANDONED ITEMS AND ITEMS SERVING NO USEFUL PURPOSE, SUCH AS ABANDONED PIPING, CONDUIT, AND WIRING.
   c. REMOVAL OF UNSUITABLE OR EXTRAGENEOUS MATERIALS NOT MARKED FOR SALVAGE, SUCH AS ABANDONED EQUIPMENT AND DEBRIS INCLUDING ROTTED WOOD, RUSTED METALS AND DETERIORATED CONCRETE.
3. ALTERATIONS AND CONNECTIONS OF NEW CONTRUCTION TO EXISTING CONSTRUCTION OCCUR AT DUST SENSITIVE AREAS. EXECUTE ALL MEASURES TO COMPLETELY CONTROL AND SEPARATE DUST FROM EXISTING AREA AND EQUIPMENT.

N

EXIST./DEMO FLOOR PLAN

SCALE:1/4"=1'-0"

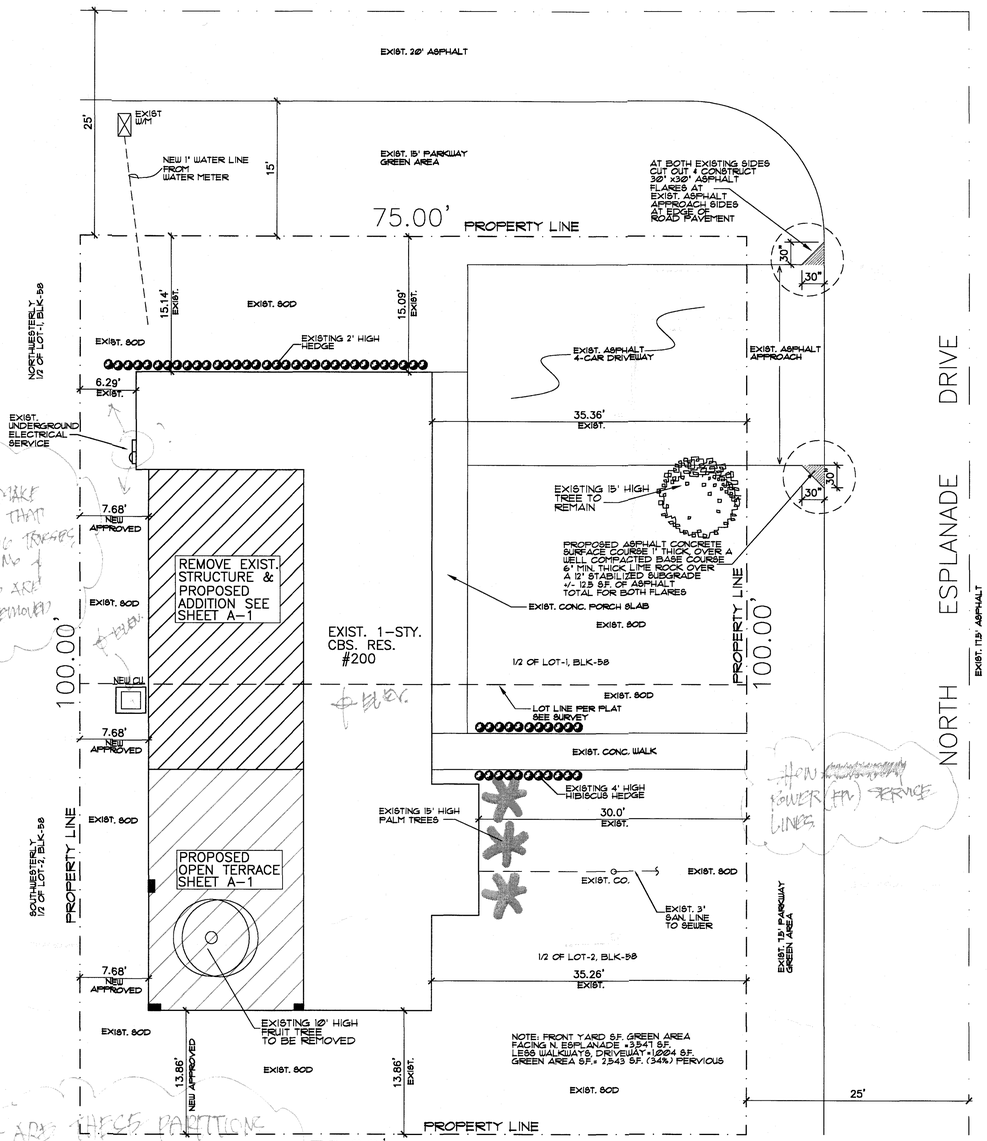

SITE PLAN

SCALE: 1/8"=1'-0"
SEE SURVEY

SCOPE OF WORK:

NOTE: THIS IS A EXISTING RESIDENCE WITH A PORTION OF IT BEING REMODELED.
ALSO THERE IS A PROPOSED ADDITION BEING ADDED TO THE REAR OF RESIDENCE.
REMOVE AND REPLACE ALL WINDOWS AND EXTERIOR DOORS AT EXISTING RESIDENCE.
REMOVE ALL EXIST. FLAT ROOF AND PROVIDE NEW TRUSS SYSTEM OVER ENTIRE STRUCTURE.
PROVIDE NEW ROOF FINISHES AT EXISTING AND NEW ADDITION UNDER A SEPARATE PERMIT.
ADDITION CONSISTS OF 2 NEW BEDROOMS & 2 NEW BATHROOMS WITH DEN.
REMOVE GARAGE DOOR AND BLOCK UP WITH WINDOW AT FRONT AS SHOWN ON A-1.
RELOCATE CERTAIN WINDOW & DOOR OPENINGS AND BLOCK UP OTHER WALL AREAS.
SEE FLOOR PLAN AND SECTIONS FOR NEW & EXIST. BLOCK WALLS & NEW TIE BEAMS.
PROVIDE NEW CONCRETE STARTER COLUMNS & CONC. BEAMS AS SHOWN ON PLAN.
WITH NEW WINDOWS/DOORS, & VERTICAL REBAR TIE COLUMNS AT NEW WALLS.
SEE PLAN FOR ALL NEW AND EXISTING CONDITIONS BEING ALTERED AND OR MODIFIED.
SEE MECHANICAL WORK AS PART OF THIS PERMIT.
SEE ELECTRICAL WORK AS PART OF THIS PERMIT.
SEE PLUMBING WORK AS PART OF THIS PERMIT.

NOTE: THE ARCHITECT OR ENGINEER OF RECORD IS NOT RESPONSIBLE FOR ANY UNEXPECTED OR UNFORESEEN OR HIDDEN EXISTING CONDITIONS THAT HAVE NOTHING TO DO WITH THE PROPOSED WORK. THESE ISSUES IF ANY WILL BE ADDRESSED SEPARATELY, AND ADDED TO THE SCOPE OF WORK.

NOTE: TRADE CONTRACTOR IS RESPONSIBLE FOR ANY COST EFFECTIVE REVISIONS TO PLANS IF ORIGINAL DESIGN OF APPROVED PLANS ARE NOT FOLLOWED. A DIFFERENT METHOD IN DESIGN MAY BE USED AFTER CONSTRUCTION & PERMIT DOCUMENTS ARE ACTIVE IN FIELD, BUT AGAIN TRADE CONTRACTOR WILL BE RESPONSIBLE FOR ANY INCURRED COSTS DUE TO ANY REQUIRED REVISION WORK ON THE ORIGINAL APPROVED PLANS. ANY AND ALL CHANGES TO PLANS MUST BE APPROVED BY THE ENGINEER OR ARCHITECT OF RECORD & BUILDING DEPT. AND WILL BE BILLED ACCORDINGLY.

LEGAL DESCRIPTION: FOLIO#=05-3118-016-1590

SELY 1/2 LOTS 1 & 2, BLOCK 58, OF "CINEMA PARK-COUNTRY CLUB ESTS ADDITION" PLAT BOOK 17, PAGE 2 AS RECORDED 13114-2660 1. OF THE PUBLIC RECORDS OF MIAMI DADE COUNTY.

CALL 48 HOURS BEFORE YOU DIG IN FLORIDA
IT'S THE LAW
1-800-432-4770
SUNSHINE STATE ONE CALL OF FLORIDA, INC.

ENVIRONMENTAL RESOURCES & LANDSCAPING TREES NOTES:

NOTE: (1) FRUIT TREE WILL BE REMOVED DURING CONSTRUCTION.
NOTE: FOR ANYOTHER NEARBY TREES THAT MAY BE AFFECTED BY THE NEW CONSTRUCTION PROTECT EXIST. TREES PROVIDE 10'-12' BARRIES AROUND TREES TO REMAIN WITH A TEMPORARY PLYWD. PARTITIONS OR SAFETY MESH
ALL DAMAGED PLANT MATERIAL INCLUDING SOD MUST BE RESTORED PRIOR TO FINAL BUILDING INSPECTION.
ALL OTHER EXISTING SHRUBS & HEDGES INCLUDING SOD TO REMAIN AS IS.

DESIGN CRITERIA

CODE EDITION: 2020-7th EDITION FLORIDA BUILDING CODE
AS PER CODE REFERENCE STANDARDS CHAPTER 35
CODE REFERENCES: ASCE/SEI 7-16, ACI 318-14, NDS 2018,AWC AF & PA-92, ASTM A615, ASTM D-698, & AITC, AISI S100-16,
MECHANICAL 2020-7th EDITION FLORIDA BUILDING CODE
ELECTRICAL 2020-7th EDITION FLORIDA BUILDING CODE
PLUMBING 2020-7th EDITION FLORIDA BUILDING CODE
NATIONAL ELECTRIC CODE (NEC 2017)
EXISTING BUILDINGS 2020-7th EDITION FLORIDA BUILDING CODE
FLORIDA FIRE PREVENTION CODE 2020 7th Edition
FLORIDA ACCESSIBILITY CODE 2020 7th Edition
ASCE/SEI 7-16 EXPOSURE CONDITION INDICATED=C
CONSTRUCTION TYPE VB UNPROTECTED
OCCUPANCY CLASSIFICATION R-3
ALTERATION LEVEL-3

I CERTIFY THIS IS BEING DESIGNED TO WITHSTAND 175 MPH WIND SPEED ACCORDING TO ASCE 7-16 AS REQUIRED BY THE FLORIDA BUILDING CODE REVISED 2020 EDITION 7th EDITION

ZONING LEGEND

ZONING CLASSIFICATION	SINGLE FAMILY RESIDENTIAL (RS-1C) DISTRICT
TOTAL GROSS LOT AREA:	12500 SQFT.
NET LOT AREA :	7500 SQFT.
LOT COVERAGE REQUIRED:	35%
LOT COVERAGE PROVIDED	32%
other conc. impervious areas 850 S.F. GREEN AREA TO REMAIN 4215 51%	
EXIST. BUILD'G. FT. PRINT	1,718 SQFT.
NEW ADDITIONAL S.F.	+ 189 SQFT.
EXIST. BEING REMOVED/REMODELED	- 404 SQFT.
TOTAL NEW UNDER A/C AREA S.F.	1,901 SQFT. A/C
NEW OPEN TERRACE S.F.	+ 461 SQFT.
(NEW TOTAL FT. PRINT S.F.)=	2,374 SQFT.

3 PARKING SPACES REQUIRED.
EXIST. CONC. DRIVEWAY FOR 4 CARS AT FRONT YARD.

SETBACKS REQUIRED:	
FRONT	30.00'
INTERIOR SIDE	7.50'
STREET SIDE	15.00'
REAR	25.00'
BETWEEN BUILDINGS	20.00'

SETBACKS PROVIDED:	
FRONT	15.09' EXIST. CONDITION APPV'D.
INTERIOR SIDE	7.67' PROPOSED
STREET SIDE	35.36' EXIST. CONDITION APPV'D.
REAR	13.86' MATCH EXIST. CONDITION APPV'D.
BETWEEN BUILDINGS	N/A

INDEX OF DRAWINGS

SP-1/D-1 SITE PLAN AND EXIST. & DEMO FLOOR PLAN
A-1 PROPOSED FLOOR PLANS, SCHED. & DETS.
A-2 FOUNDATIONS & STRUCTURAL SECTIONS/DETAILS
A-3 WINDOW SCHEDULES & DETAILS
A-4 PROPOSED ELEVATIONS
A-5 ROOF PLAN & STRUCTURAL DETAILS
A-6 ROOF DIAGRAM & OTHER DETAILS, NOTES.
M-1 MECHANICAL SHEET AND SCHEDULES, DETAILS
E-1 ELECTRICAL SHEET AND SCHEDULES, RISERS
P-1 PLUMBING SHEET AND DETAILS.
P-2 PLUMBING SHEET AND DETAILS.

OFFICE COPY
CITY OF MIAMI SPRINGS

SEPARATE PERMIT REQUIRED FOR ROOFING, PLUMBING ELECTRICAL, MECHANICAL, SHUTTERS, WINDOWS, DOORS AND DRIVEWAYS

CITY OF MIAMI SPRINGS APPROVED FOR PERMIT ONE

STATE OF FLORIDA — AR0013960 — REGISTERED ARCHITECT
Guillermo Ramon Gonzalez
R.A. 13960
STATE OF FLORIDA

NO.	DATE
1	
2	
3	
4	

DESG	DRWN	CHKD	APPV	DATE

PROJECT NAME: ADDITION TO RESIDENCE FOR:
OWNER/PH: AMBAR PREVAL 786-587-7391
ADDRESS:200 N. ESPLANADE DRIVE MIAMI SPRINGS, FLORIDA 33166
PROJECT ADD: SAME

Guillermo Ramon Gonzalez
9000 SW. 168th Avenue Miami Florida 33196 Ph:305-484-8171
Registered Architect #13960 Ph:786-237-5154 (assistant)

101521

SP-1
D-1

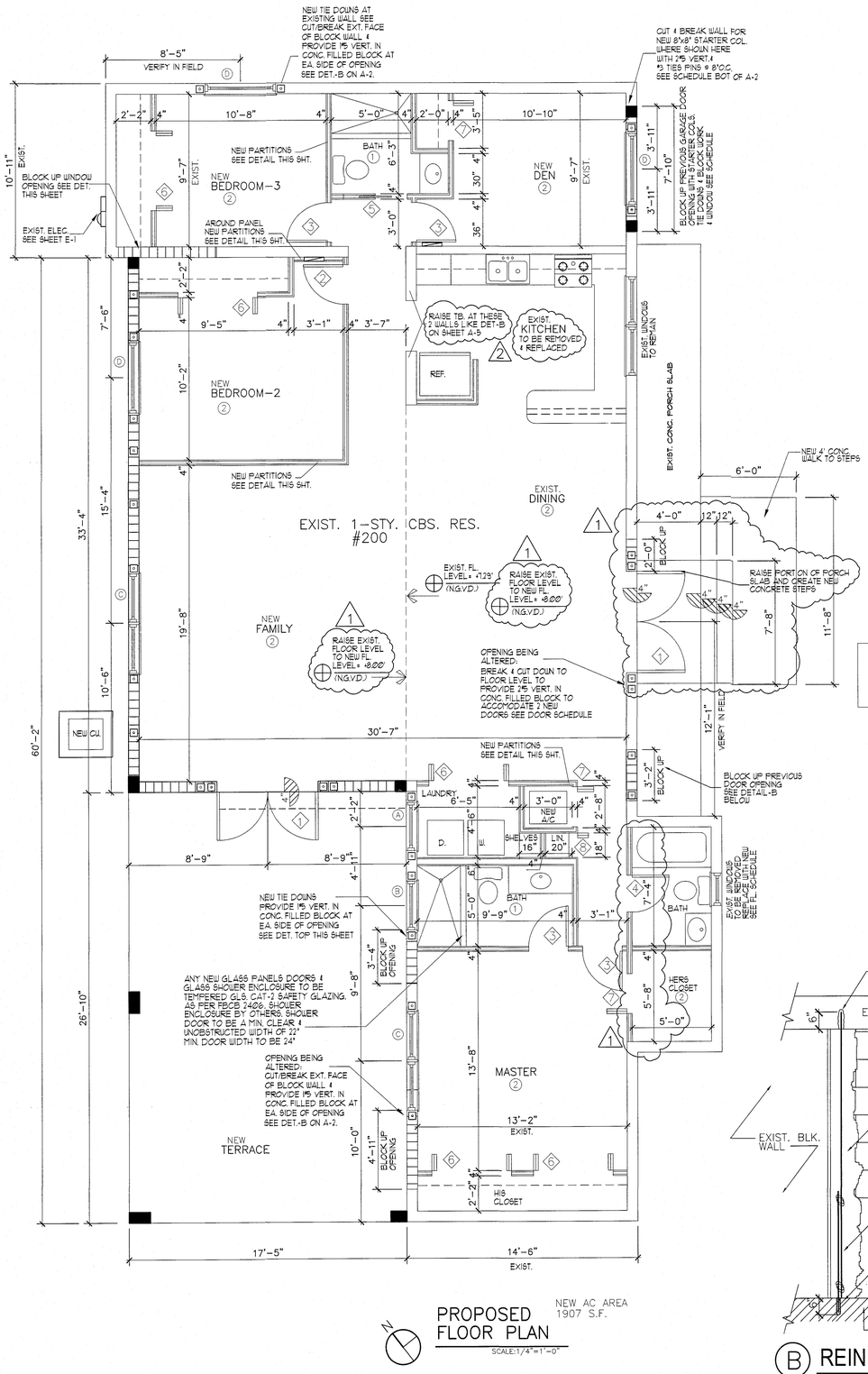

PROPOSED FLOOR PLAN

SCALE:1/4"=1'-0"

WALL LEGEND

- EXIST. 8"BLOCK WALL TO REMAIN
- NEW 4" OR 8"PARTITION (2x4 WOOD STUDS) OR (26ga METAL CHANNELS) SEE FL.PL.
- EXIST. 4"PARTITION TO BE REMOVED OR CONC. BLK. WALL TO BE REMOVED
- NEW 8" CONC.BLOCK WALL SEE FL.PL.

FOR INTRUSSION NOTES SEE SHEET A-6

NOTE: THERE IS NO LEGALIZATION BEING DONE HERE. EXISTING REAR ADDITION IS BEING REMOVED (SEE D-1) ALSO EXISTING GARAGE AT LEFT FRONT OF RESIDENCE BEING CONVERTED TO LIVING AREA.

INTERIOR PARTITION DETAIL

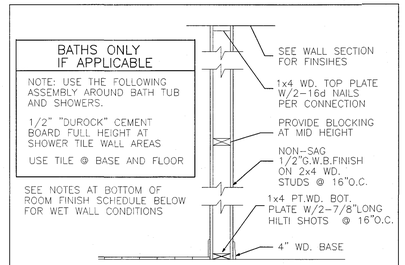

SCALE:3/4"= 1'-0"

NOTE: WALL HUNG PLUMBING FIXTURES /CABINETS: STEEL STUD FRAMING SUPPORTING WALLS HUNG PLUMBING FIXTURES OR CABINETS SHALL BE DOUBLED PER R4411.4.5.1 & SHALL HAVE A HORZ. MEMBER SECURED TO NOT LESS THAN TWO STUDS AS PER R4411.4.51.3 FBC.

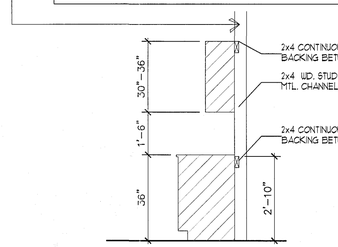

KIT. CABINET DETAIL

SCALE: NTS.

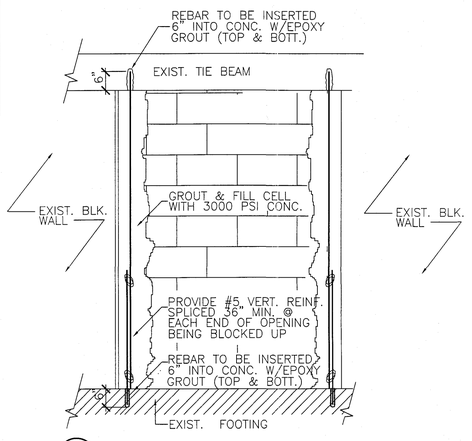

(B) REINF. BLOCK UP DETAIL

SCALE: 3/4" = 1'-0"

THE MODE OF OPERATION SHALL NOT REQUIRE A KEY, TOOL SPECIAL KNOWLEDGE OR EFFORT TO MAKE AVAILABLE THE REQUIRED CLEAR OPENING AND NO PART OF THE OPERATING MECHANISM SHALL BE PLACED HIGHER THAN 54" A.F.F. SIMILAR SPECS APPLY TO ROLLING WINDOW INSTALLATIONS. BELOW DETAIL REQUIREMENTS ALSO APPLIES TO CASEMENT OR SINGLE HUNG WINDOWS

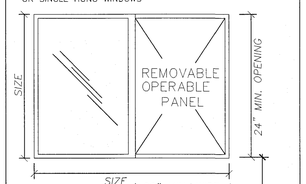

(MIN. AREA 5.7 S.F.)

DETAIL OF EGRESS WINDOW

SCALE:3/4"= 1'-0"

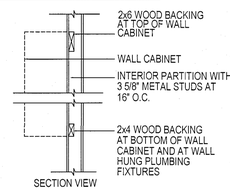

SECTION VIEW

WOOD BACKING DETAIL

SCALE:N.T.S.

- STEEL STUDS SHALL BE A MIN. OF 20 GA. AT WALL HUNG FIXTURE LOCATIONS TO COMPLY W/ 2510.5.1.1 F.B.C. & W/ 2318.1.15 F.B.C.
- A MINIMUM 2x4 HORIZONTAL WOOD MEMBER SECURELY FASTENED TO NOT LESS THAN 2 SUCH STUDS, SHALL BE INSTALLED FOR THE ATTACHMENT OF EACH WALL HUNG PLUMBING FIXTURE, WALL CABINET AND TO ALLOW FUTURE INSTALLATION OF GRAB BARS BEHIND TOILET AND TUB SIDES.

CITY OF MIAMI SPRINGS BUILDING DEPARTMENT
APR 12 2022
RECEIVED
REWORK

FLAME SPREAD INDEX NOTES:

MATERIAL INTERIOR FINISH: NOTE: GROUP R-3 CLASS-C
NOTE: ANY NEW WALL AND CEILING FINISHES INSTALLED, TO HAVE A FLAME SPREAD INDEX 76-200, AND A SMOKE DEVELOPED INDEX OF 0-450 AS PER F.B.C. '17 803.1.1 INTERIOR WALLS & CEILING MATERIALS

NOTE: IF ANY NEW DECORATIVE OR TRIM MATERIALS ARE INSTALLED, THEN TO HAVE A MIN. OF CLASS C FLAME SPREAD INDEX AS ABOVE ALL NEW TILE FLOORING IN BATHROOMS TO COMPLY WITH 804.1 TO 804.4.2 & IN ACCORDANCE NFPA 253 CHAPTER 8 INTERIOR FINISHES

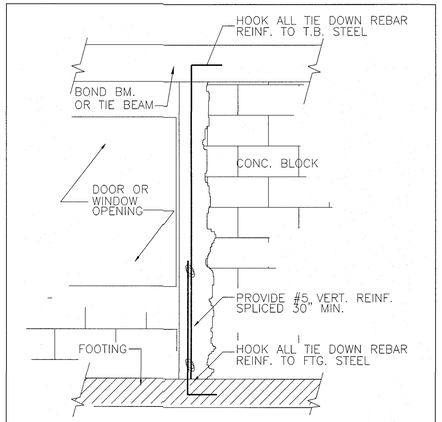

TIE DOWN/COLUMN SPLICE DETAIL (TYPICAL)

AT NEW WALLS SCALE: 3/4" = 1'-0"

I CERTIFY THIS ADDITION TO BE DESIGNED TO WITHSTAND 175 MPH WIND SPEED ACCORDING TO ASCE 7-10 AS REQUIRED BY THE FLORIDA BUILDING CODE REVISED 2020-7th EDITION

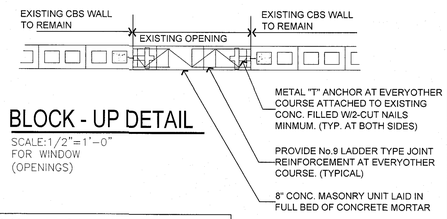

BLOCK - UP DETAIL

SCALE:1/2"=1'-0"
FOR WINDOW (OPENINGS)

ROOM FINISH SCHEDULE

NO.	ROOM NAME	FLOOR	BASE	WALL	CEILING MAT.	CEILING HT.	REMARKS
1	BATHS	TILE	TILE	TILE	O.B. PAINT	8'-2"	FLOOR & BASE IMPERVIOUS
2	ANY OTHER LIVING AREA	TILE	TILE	G.W.B.	W.B. PAINT	8'-2"	
3							

DOOR SCHEDULE

NOTE: OWNER/G.C. TO VERIFY ALL NEW & EXIST. WINDOWS/DOOR SIZES TO BE REMOVED & REPLACED.

GLASS PANELS IN ANY DOORS TO BE TEMPERED GLS. CAT-2 SAFETY GLAZING TO COMPLY WITH 3508.3(D)(3) & 2411.3.1.3 & 2405.2.1 (1) & (2) "FBC"

MARK	TYPE	SIZE W	SIZE H	SIZE T	DESCRIPTION	MATERIAL	FRAME	REMARKS
1		(2)-36"	6'-8"	1 3/8"	FRENCH DOORS	METAL	METAL	ALUM. & GLS. FRENCH DOORS TEMPERED GLS. CAT-2 SEE N.O.A. & PRODUCT APPROVAL IMPACT RESISTANT FRONT DOOR TO BE FROSTED SMOKED/FROST DOOR WITH THRESHOLD
2		32"	6'-8"	1 3/8"	HOLLOW CORE SWING DOOR	WOOD	WOOD	
3		30"	6'-8"	1 3/8"	HOLLOW CORE SWING DOOR	WOOD	WOOD	
4		24"	6'-8"	1 3/8"	HOLLOW CORE SWING DOOR	WOOD	WOOD	
5		30"	6'-8"	1"	POCKET DOOR	WOOD	WOOD	
6		2-30"	6'-8"	1"	BI-FOLD LOUVERED	WOOD	WOOD	LOUVERED (OPTIONAL)
7		30"	6'-8"	1"	BI-FOLD LOUVERED	WOOD	WOOD	LOUVERED (OPTIONAL)
8		18"	6'-8"	1"	BI-FOLD LOUVERED	WOOD	WOOD	LOUVERED (OPTIONAL) OR SWING DOOR
9								

ALL NEW EXTERIOR DOORS TO BE IMPACT RESISTANT
EVERY CLOSET DOOR LATH SHALL BE SUCH THAT CHILDEN CAN OPEN FROM INSIDE CLOSET.
EVERY BATHROOM DOOR SHALL PERMIT THE OPENING OF THE LOCKED DOOR FROM THE OUTSIDE IN AN EMERGENCY. AS PER FBC 420.3.11.2

2 GLS. DRS. U VALUE 1.20
GLS. DRS. shgc U VALUE 0.45

CITY OF MIAMI SPRINGS
APPROVED
FOR PERMIT ONLY
BUILDING INSPECTOR
PLUMBING INSPECTOR
ELECTRICAL INSPECTOR
MECHANICAL INSPECTOR
ZONING
STRUCTURAL

NO.	DATE
1	1-14-22 REVISED TO RAISE EXIST FL. LEVEL TO 8.0
2	3-23-22 REVISED TO COMPLY WITH CITY COMMENTS
3	
4	

DESIG	DRWN	CHKD	APPRV	DATE
.	.	.	.	.

PROJECT NAME: ADDITION TO RESIDENCE FOR:
OWNER/PH: AMBAR PREVAL 786-587-7391
ADDRESS:200 N. ESPLANADE DRIVE MIAMI SPRINGS, FLORIDA 33166
PROJECT ADD: SAME

Guillermo Ramon Gonzalez
9000 SW. 168th Avenue Miami Florida 33196 Ph:305-484-8171
Registered Architect #13960 Ph:786-237-5154 (assistant)

STATE OF FLORIDA GUILLERMO RAMON GONZALEZ AR0013960 REGISTERED ARCHITECT
Guillermo Ramon Gonzalez
R.A. 13960
STATE OF FLORIDA

101521

A-1

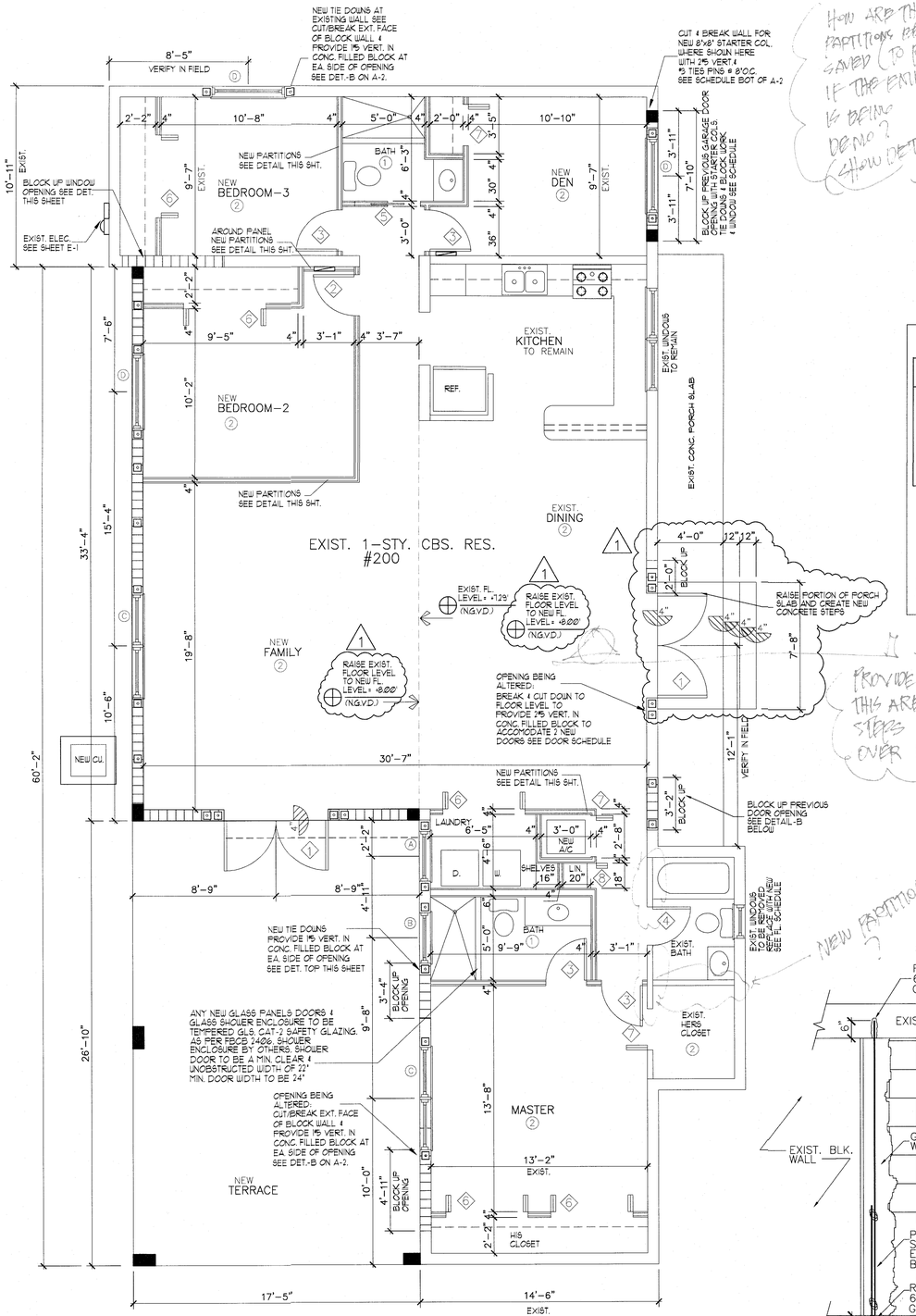

PROPOSED FLOOR PLAN

SCALE:1/4"=1'-0"

How are these partitions being saved (to remain) if the entire roof is being demo? Show detail

Provide section thru this area to show conc. steps and new header over new door.

Note: Provide detail to show how existing conc. headers are being addressed.

WALL LEGEND

- EXIST. 8"BLOCK WALL TO REMAIN
- NEW 4" OR 8"PARTITION SEE FL.PL. (2x4 WOOD STUDS) OR (25ga VERT. CHANNELS)
- EXIST.4"PARTITION TO REMAIN
- EXIST. 4"PARTITION TO BE REMOVED OR CONC. BLK. WALL TO BE REMOVED
- NEW 8" CONC.BLOCK WALL SEE FL.PL.

FOR INTRUSSION NOTES SEE SHEET A-6

NOTE: THERE IS NO LEGALIZATION BEING DONE HERE. EXISTING REAR ADDITION IS BEING REMOVED (SEE D-1) ALSO EXISTING GARAGE AT LEFT FRONT OF RESIDENCE BEING CONVERTED TO LIVING AREA.

THE MODE OF OPERATION SHALL NOT REQUIRE A KEY, TOOL SPECIAL KNOWLEDGE OR EFFORT TO MAKE AVAILABLE THE REQUIRED CLEAR OPENING AND NO PART OF THE OPERATING MECHANISM SHALL BE PLACED HIGHER THAN 54" A.F.F. SIMILAR SPECS APPLY TO ROLLING WINDOW INSTALLATIONS. BELOW DETAIL REQUIREMENTS ALSO APPLIES TO CASEMENT OR SINGLE HUNG WINDOWS

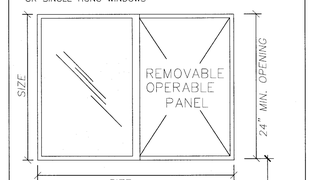

DETAIL OF EGRESS WINDOW

SCALE:3/4"= 1'-0"

BATHS ONLY IF APPLICABLE

NOTE: USE THE FOLLOWING ASSEMBLY AROUND BATH TUB AND SHOWERS.

1/2" "DUROCK" CEMENT BOARD FULL HEIGHT AT SHOWER TILE WALL AREAS

USE TILE @ BASE AND FLOOR

SEE NOTES AT BOTTOM OF ROOM FINISH SCHEDULE BELOW FOR WET WALL CONDITIONS

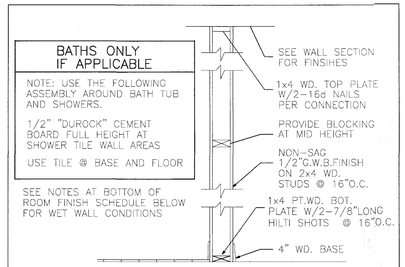

INTERIOR PARTITION DETAIL

SCALE:3/4"= 1'-0"

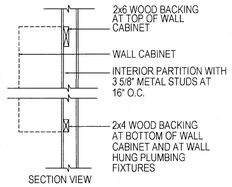

WOOD BACKING DETAIL

SCALE:N.T.S.

- STEEL STUDS SHALL BE A MIN. OF 20 GA. AT WALL HUNG FIXTURE LOCATIONS TO COMPLY W/ 2510.5.1.1 F.B.C. & W/ 2318.1.15 F.B.C.

- A MINIMUM 2x4 HORIZONTAL WOOD MEMBER SECURELY FASTENED TO NOT LESS THAN 2 SUCH STUDS, SHALL BE INSTALLED FOR THE ATTACHMENT OF EACH WALL HUNG PLUMBING FIXTURE, WALL CABINET AND TO ALLOW FUTURE INSTALLATION OF GRAB BARS BEHIND TOILET AND TUB SIDES.

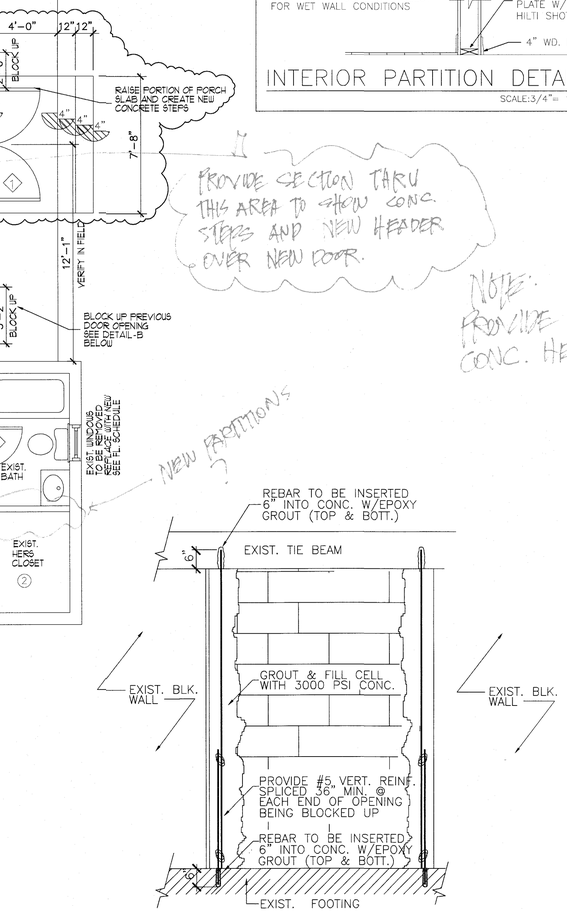

(B) REINF. BLOCK UP DETAIL

SCALE: 3/4" = 1'-0"

FLAME SPREAD INDEX NOTES:

MATERIAL INTERIOR FINISH: NOTE: GROUP R-3 CLASS-C
NOTE: ANY NEW WALL AND CEILING FINISHES INSTALLED, TO HAVE A FLAME SPREAD INDEX 76-200, AND A SMOKE DEVELOPED INDEX OF 0-450 AS PER F.B.C. '17 803.1.1 INTERIOR WALLS & CEILING MATERIALS

NOTE: IF ANY NEW DECORATIVE OR TRIM MATERIALS ARE INSTALLED, THEN TO HAVE A MIN. OF CLASS C FLAME SPREAD INDEX AS ABOVE ALL NEW TILE FLOORING IN BATHROOMS TO COMPLY WITH 804.1 TO 804.4.2 & IN ACCORDANCE NFPA 253 CHAPTER 8 INTERIOR FINISHES

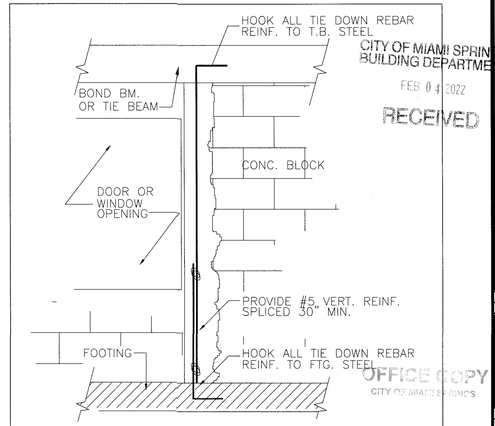

TIE DOWN/COLUMN SPLICE DETAIL (TYPICAL) AT NEW WALLS

SCALE: 3/4" = 1'-0"

CITY OF MIAMI SPRINGS BUILDING DEPARTMENT
FEB 04 2022
RECEIVED

OFFICE COPY
CITY OF MIAMI SPRINGS

I CERTIFY THIS ADDITION TO BE DESIGNED TO WITHSTAND 175 MPH WIND SPEED ACCORDING TO ASCE 7-10 AS REQUIRED BY THE FLORIDA BUILDING CODE REVISED 2020-7th EDITION

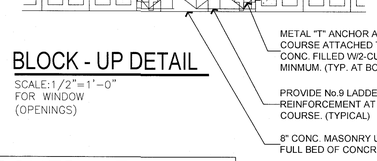

BLOCK - UP DETAIL

SCALE:1/2"=1'-0" FOR WINDOW (OPENINGS)

ROOM FINISH SCHEDULE

NO.	ROOM NAME	FLOOR	BASE	WALL	CEILING MAT.	CEILING HT.	REMARKS
1	BATHS	TILE	TILE	TILE	O.B. PAINT	8'-2"	FLOOR & BASE IMPERVIOUS
2	ANY OTHER LIVING AREA	TILE	TILE	G.W.B.	W.B. PAINT	8'-2"	
3							

NOTE: OWNER/G.C. TO VERIFY ALL NEW & EXIST. WINDOWS/DOOR SIZES TO BE REMOVED & REPLACED

DOOR SCHEDULE

GLASS PANELS IN ANY DOORS TO BE TEMPERED GLS. CAT-2 SAFETY GLAZING TO COMPLY WITH 3508.3(D)(3) & 2411.3.1.3 & 2405.2.1 (1) & (2) "FBC"

MARK	TYPE	SIZE W	SIZE H	SIZE T	DESCRIPTION	MATERIAL	FRAME	REMARKS
1		(2)-36"	6'-8"	1 3/8"	FRENCH DOORS	METAL	METAL	ALUM. & GLS. FRENCH DOORS TEMPERED GLS. CAT-2 SEE N.O.A. & PRODUCT APPROVAL IMPACT RESISTANT FRONT DOOR TO BE FROSTED SMOKED/FROST DOOR WITH THRESHOLD
2		32"	6'-8"	1 3/8"	HOLLOW CORE SWING DOOR	WOOD		
3		30"	6'-8"	1 3/8"	HOLLOW CORE SWING DOOR	WOOD	WOOD	
4		24"	6'-8"	1 3/8"	HOLLOW CORE SWING DOOR	WOOD	WOOD	
5		30"	6'-8"	1"	POCKET DOOR	WOOD	WOOD	
6		2-30"	6'-8"	1"	BI-FOLD LOUVERED	WOOD	WOOD	LOUVERED (OPTIONAL)
7		30"	6'-8"	1"	BI-FOLD LOUVERED	WOOD	WOOD	LOUVERED (OPTIONAL)
8		18"	6'-8"	1"	BI-FOLD LOUVERED	WOOD	WOOD	LOUVERED (OPTIONAL) OR SWING DOOR
9								

ALL NEW EXTERIOR DOORS TO BE IMPACT RESISTANT
EVERY CLOSET DOOR LATH SHALL BE SUCH THAT CHILDEN CAN OPEN FROM INSIDE CLOSET.
EVERY BATHROOM DOOR SHALL PERMIT THE OPENING OF THE LOCKED DOOR FROM THE OUTSIDE IN AN EMERGENCY. AS PER FBC 420.3.11.2

SHGC & U-FACTOR VALUES MISSING FOR GLASS DOORS.

REWORK

CITY OF MIAMI SPRINGS APPROVED FOR PERMIT ONLY

NO.	DATE	
1	1-14-22	REVISED TO RAISE EXIST. FL. LEVEL TO 8.0

PROJECT NAME: ADDITION TO RESIDENCE FOR:
OWNER/PH: AMBAR PREVAL 786-587-7391
ADDRESS:200 N. ESPLANADE DRIVE MIAMI SPRINGS, FLORIDA 33166
PROJECT ADD: SAME

DSGN | DRWN | CHKD | APRV | DATE

Guillermo Ramon Gonzalez
9000 SW. 168th Avenue Miami Florida 33196 Ph:305-484-8171
Registered Architect #13960 Ph:786-237-5154 (assistant)

STATE OF FLORIDA — GUILLERMO RAMON GONZALEZ — AR0013960 — REGISTERED ARCHITECT

Guillermo Ramon Gonzalez
R.A. 13960
STATE OF FLORIDA

101521

A-1

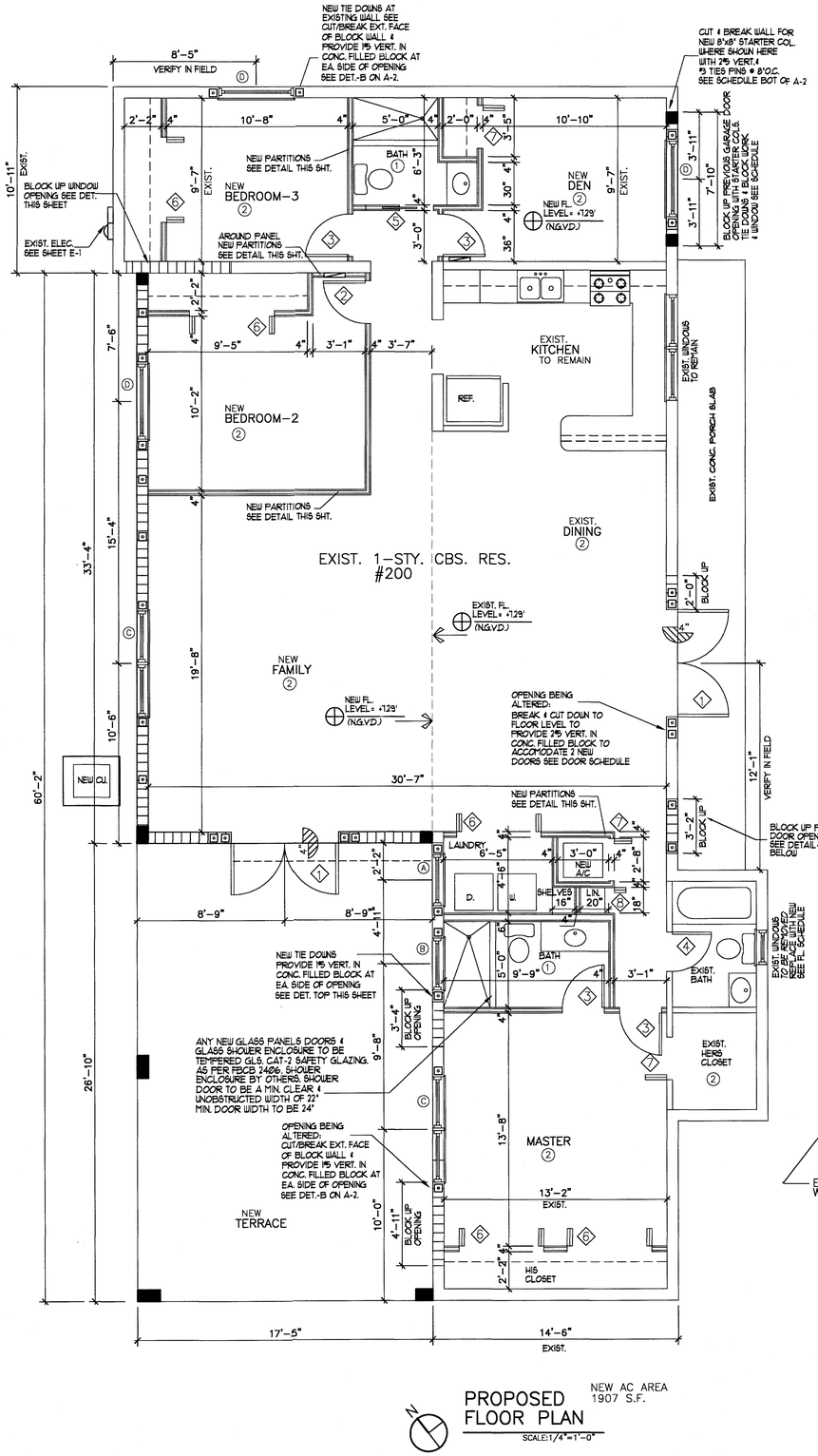

PROPOSED FLOOR PLAN

NEW AC AREA 1907 S.F.

SCALE:1/4"=1'-0"

WALL LEGEND

- EXIST. 8"BLOCK WALL TO REMAIN
- NEW 4" OR 8"PARTITION SEE FL.PL. (2x4 WOOD STUDS) OR (26ga METAL CHANNELS)
- EXIST.4"PARTITION TO REMAIN
- EXIST. 4"PARTITION TO BE REMOVED OR CONC. BLK. WALL TO BE REMOVED
- NEW 8" CONC.BLOCK WALL SEE FL.PL.

FOR INTRUSSION NOTES SEE SHEET A-6

NOTE: THERE IS NO LEGALIZATION BEING DONE HERE. EXISTING REAR ADDITION IS BEING REMOVED (SEE D-1) ALSO EXISTING GARAGE AT LEFT FRONT OF RESIDENCE BEING CONVERTED TO LIVING AREA.

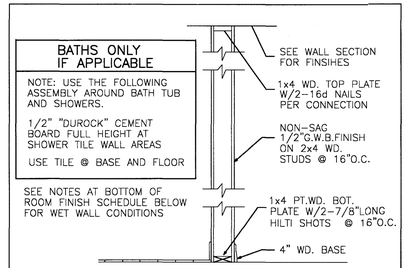

INTERIOR PARTITION DETAIL

SCALE:3/4"= 1'-0"

THE MODE OF OPERATION SHALL NOT REQUIRE A KEY, TOOL SPECIAL KNOWLEDGE OR EFFORT TO MAKE AVAILABLE THE REQUIRED CLEAR OPENING AND NO PART OF THE OPERATING MECHANISM SHALL BE PLACED HIGHER THAN 54" A.F.F. SIMILAR SPECS APPLY TO ROLLING WINDOW INSTALLATIONS. BELOW DETAIL REQUIREMENTS ALSO APPLIES TO CASEMENT OR SINGLE HUNG WINDOWS

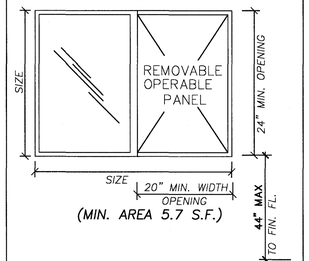

DETAIL OF EGRESS WINDOW

SCALE:3/4"= 1'-0"

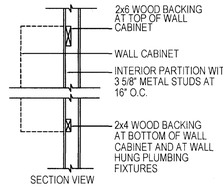

WOOD BACKING DETAIL

SCALE:N.T.S.

- STEEL STUDS SHALL BE A MIN. OF 20 GA. AT WALL HUNG FIXTURE LOCATIONS TO COMPLY W/ 2510.5.1.1 F.B.C. & W/ 2318.1.15 F.B.C.
- A MINIMUM 2x4 HORIZONTAL WOOD MEMBER SECURELY FASTENED TO NOT LESS THAN 2 SUCH STUDS, SHALL BE INSTALLED FOR THE ATTACHMENT OF EACH WALL HUNG PLUMBING FIXTURE, WALL CABINET AND TO ALLOW FUTURE INSTALLATION OF GRAB BARS BEHIND TOILET AND TUB SIDES.

FLAME SPREAD INDEX NOTES:

MATERIAL INTERIOR FINISH: NOTE: GROUP R-3 CLASS-C
NOTE: ANY NEW WALL AND CEILING FINISHES INSTALLED, TO HAVE A FLAME SPREAD INDEX 76-200, AND A SMOKE DEVELOPED INDEX OF 0-450 AS PER F.B.C. '17 803.1.1 INTERIOR WALLS & CEILING MATERIALS

NOTE: IF ANY NEW DECORATIVE OR TRIM MATERIALS ARE INSTALLED, THEN TO HAVE A MIN. OF CLASS C FLAME SPREAD INDEX AS ABOVE ALL NEW TILE FLOORING IN BATHROOMS TO COMPLY WITH 804.1 TO 804.4.2 & IN ACCORDANCE NFPA 253 CHAPTER 8 INTERIOR FINISHES

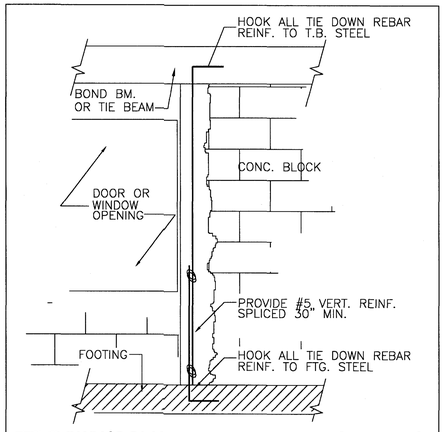

TIE DOWN/COLUMN SPLICE DETAIL (TYPICAL) AT NEW WALLS

SCALE: 3/4" = 1'-0"

I CERTIFY THIS ADDITION TO BE DESIGNED TO WITHSTAND 175 MPH WIND SPEED ACCORDING TO ASCE 7-10 AS REQUIRED BY THE FLORIDA BUILDING CODE REVISED 2020-7th EDITION

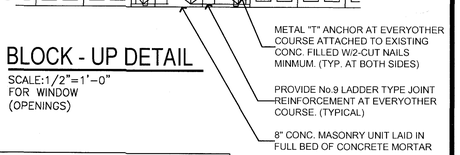

BLOCK - UP DETAIL

SCALE:1/2"=1'-0" FOR WINDOW (OPENINGS)

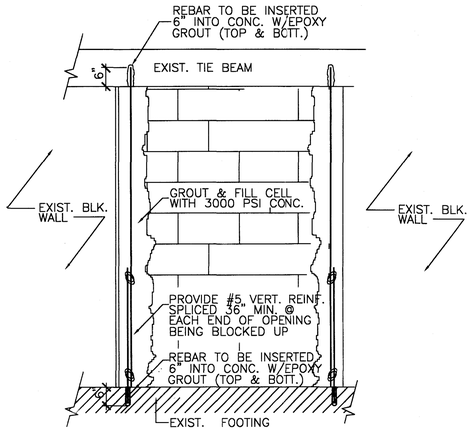

(B) REINF. BLOCK UP DETAIL

SCALE: 3/4" = 1'-0"

ROOM FINISH SCHEDULE

NO.	ROOM NAME	FLOOR	BASE	WALL	CEILING MAT.	CEILING HT.	REMARKS
①	BATHS	TILE	TILE	TILE	O.B. PAINT	8'-2"	FLOOR & BASE IMPERVIOUS
②	ANY OTHER LIVING AREA	TILE	TILE	G.W.B.	W.B. PAINT	8'-2"	
③							

NOTE: OWNER/G.C. TO VERIFY ALL NEW & EXIST. WINDOWS/DOOR SIZES TO BE REMOVED & REPLACED.

DOOR SCHEDULE

GLASS PANELS IN ANY DOORS TO BE TEMPERED GLS. CAT-2 SAFETY GLAZING TO COMPLY WITH 3508.3.2(1)(3) & 2411.3.1.3 & 2405.2.1 (1) & (2) "FBC"

MARK	TYPE	SIZE W	SIZE H	SIZE T	DESCRIPTION	MATERIAL	FRAME	REMARKS
①		(2)-36"	6'-8"	1 3/8"	FRENCH DOORS	METAL	METAL	ALUM. & GLS. FRENCH DOORS TEMPERED GLS. CAT-2 SEE N.O.A. & PRODUCT APPROVAL
②		32"	6'-8"	1 3/8"	HOLLOW CORE SWING DOOR	WOOD		IMPACT RESISTANT FRONT DOOR TO BE FROSTED SMOKED/FROST DOOR WITH THRESHOLD
③		30"	6'-8"	1 3/8"	HOLLOW CORE SWING DOOR	WOOD	WOOD	
④		24"	6'-8"	1 3/8"	HOLLOW CORE SWING DOOR	WOOD	WOOD	
⑤		30"	6'-8"	1"	POCKET DOOR	WOOD	WOOD	
⑥		2-30"	6'-8"	1"	BI-FOLD LOUVERED	WOOD	WOOD	LOUVERED (OPTIONAL)
⑦		30"	6'-8"	1"	BI-FOLD LOUVERED	WOOD	WOOD	LOUVERED (OPTIONAL)
⑧		18"	6'-8"	1"	BI-FOLD LOUVERED	WOOD	WOOD	LOUVERED (OPTIONAL) OR SWING DOOR
⑨								

ALL NEW EXTERIOR DOORS TO BE IMPACT RESISTANT.
EVERY CLOSET DOOR LATH SHALL BE SUCH THAT CHILDEN CAN OPEN FROM INSIDE CLOSET.
EVERY BATHROOM DOOR SHALL PERMIT THE OPENING OF THE LOCKED DOOR FROM THE OUTSIDE IN AN EMERGENCY. AS PER FBC 420.3.11.2

CITY OF MIAMI SPRINGS APPROVED FOR PERMIT ONLY

STATE OF FLORIDA · GUILLERMO RAMON GONZALEZ · AR0023865 · REGISTERED ARCHITECT

Guillermo Ramon Gonzalez
R.A. 13960
STATE OF FLORIDA

NO.	DATE
1	
2	
3	
4	

DESG	DRWN	CHKD	APPV	DATE

PROJECT NAME: ADDITION TO RESIDENCE FOR:
OWNER/PH: AMBAR PREVAL 786-587-7391
ADDRESS:200 N. ESPLANADE DRIVE MIAMI SPRINGS, FLORIDA 33166
PROJECT ADD: SAME

Guillermo Ramon Gonzalez
9000 SW. 168th Avenue Miami Florida 33196 Ph:305-484-8171
Registered Architect #13960 Ph/786-237-7154 (assistant)

101521

A-1

GENERAL NOTES:

1. CONCRETE SHALL HAVE 3,000 PSI COMPRESSIVE STRENGTH AT 28 DAYS, UNLESS OTHERWISE NOTED (U.O.N.)
2. ALL REINFORCING STEEL SHALL BE DEFORMED BARS, AND SHALL HAVE A MINIMUM YIELD STRENGTH OF 60,000 PSI GRADE 60, AND MEET ASTM A-615 SPECS.
3. ALL STRUCTURAL STEEL SHALL HAVE A MINIMUM YIELD STRENGTH OF 36,000 PSI, AND MEET ASTM A-36 SPECS.
4. DROP TIE BEAM OVER DOORS EXTEND 8" PAST OPENING ON BOTH SIDES AND ADD 2-#5 BARS FOR EVERY ADDITIONAL 8" OF BEAM HEIGHT (2 ADDITIONAL BARS MIN.)

FOUNDATIONS

SOIL STATEMENT:

1. THE SOIL AT THIS SITE HAS BEEN OBSERVED BY THE ARCHITECT OR ENGINEER TO BE COMPOSED OF SAND AND ROCKS AND CAN BE CONSIDERED TO HAVE AN ALLOWABLE MINIMUM DESIGN BEARING CAPACITY OF 2,000 P.S.F. (SHOULD ANY OTHER CONDITIONS OR MATERIALS BE ENCOUNTERED IN THE PROCESS OF CONSTRUCTION THE ARCHITECT OR ENGINEER SHALL BE NOTIFIED BEFORE PROCEEDING WITH THE WORK).
   ALL BUILDINGS SHALL HAVE PRE-CONSTRUCTION TREATMENT PROTECTION AGAINST SUBTERRANEAN TERMITES AS PER F.B.C. 2020 7th EDITION. A CERTIFICATE OF COMPLIANCE SHALL BE ISSUED TO THE BUILDING DEPARTMENT BY THE LICENSED PEST CONTROL COMPANY THAT CONTAINS THE FOLLOWING STATEMENTS : " THE BUILDING HAS RECEIVED A COMPLETE TREATMENT FOR THE PREVENTION OF SUBTERRANEAN TERMITES. TREATMENT IS IN ACCORDANCE WITH THE RULES AND LAWS ESTABLISHED BY THE FLORIDA DEPARTMENT OF AGRICULTURE AND CONSUMER SERVICES ".
2. AT THE TIME OF CONSTRUCTION THE ARCHITECT OR ENGINEER SHALL SUBMIT TO THE BUILDING OFFICIAL A LETTER ATTESTING THAT THE SITE HAS BEEN OBSERVED AND THAT THE FOUNDATION CONDITIONS ARE SIMILAR TO THOSE UPON WHICH THE DESIGN IS BASED.
3. SOIL AT THE BUILDING AREA SHALL BE VIBRE-ROLLED TO A MIN. COMP ACTION OF 2,000 P.S.F. AND MODIFIED PROCTOR DENSITY.
4. CENTERLINE OF FOOTING IS CENTERLINE OF COLUMNS AND BEARING WALLS, UNLESS OTHER WISE NOTED (U.O.N.).
5. ELEVATION OF TOP OF FOOTING SHALL BE 1'- 0" BELOW THE FINISHED GRADE, U.O.N.
6. PROVIDE BEND DOWELS AT ALL COLUMNS AND VERTICAL REINFORCEMENT SAME SIZE AND QUANTITY AS REINFORCEMENT.

REINFORCING

1. MINIMUM CLEAR COVER FOR REBARS TO BE AS FOLLOWS:
   COLUMNS = 1-1/2" TO TIE FOOTINGS = 3" BEAMS = 1-1/2" TO TIE
   PEDESTAL = 2" TO TIE SLAB ON FILL = 2" FROM TOP SLABS = 3/4"
2. ALL REINFORCING SHALL BE HELD SECURELY IN POSITION WITH STANDARD ACCESSORIES
3. SPLICES IN CONTINUOS TOP REBARS SHALL BE MADE AT MID SPAN, SPLICES IN CONTINUOS BOTTOM REBARS SHALL BE OVER SUPPORT(S).
4. SPLICES IN REINFORCING, WHERE PERMITTED, SHALL BE AS FOLLOWS:
   COLUMN VERT.BARS = 30 BAR DIA. TEMPERATURE REBARS = 12" MIN.
   FOOTING DOWELS = 30 BAR DIA. + 8" WELDED WIRE MESH = 6"
   TENSION SPLICE = CLASS "C" ALL OTHERS = 30 BAR DIA.
5. PROVIDE 2 N°5 60" LONG BEND BARS AT CORNERS OF BEAMS.

SLAB

4" FIBER STEALTH CONCRETE SLAB 3000 PSI

1. ~~SLAB SHALL BE 2500 PSI CONCRETE (MIN.), 4" THICK, REINFORCED WITH 6"X 6" - 10/10 (GAUGE) WELDED WIRE MESH (W.W.M.);~~ ON WELL COMPACTED FILL.
2. FILL MATERIAL SHALL BE CLEAN SAND AND ROCK COMPACTED TO 95% OF MAXIMUM DENSITY IN LIFTS NOT TO EXCEED 12" IN DEPTH.
3. PLACE CONCRETE SLABS IN A CHECKERBOARD PATTERN, NO PANEL EXCEEDING 25 FEET OF LENGTH, OR 625 SF IN AREA, OR USE CONTROL JOINTS.
4. ELEVATION TOP OF CONCRETE SLAB SHOWN THUSLY; OR MATCH EXISTING ADJACENT FLOOR ELEVATION.
5. WALLS, COLUMNS, AND BEAMS, PENETRATING SLAB ON FILL, SHALL BE ISOLATED BY 1/2" PRE MOLDED JOINT FILLER, UNLESS OTHERWISE NOTED (U.O.N.).
6. SLABS SHALL BE PLACED OVER 1 LAYER OF PLASTIC MEMBRANE, SUCH AS 6 MIL VISQUEEN, OR SIMILAR.
7. SLABS ON FILL SHALL BE CURED CONTINUOUSLY FOR 5 DAYS.

MASONRY

1. CONCRETE MASONRY UNITS (CMU), OR "BLOCKS", SHALL CONFORM TO ASTM C-90 SPECS.
2. COMPRESSIVE STRENGTH OF MASONRY UNITS SHALL BE NOT LESS THAN FM=1500 PSI.
3. ALL BLOCK WALLS SHALL BE LAID IN A FULL BEDDING OF MORTAR, WITH A COMPLETE COVERAGE OF THE BLOCK'S FACE SHELL (HORIZONTALLY) AND MORTAR GROOVES (VERTICALLY). AND REINFORCED WITH #8 TRUSS TYPE JOINT REINFORCEMENT @ EVERY OTHER COURSE (16"O.C.VERTICALLY)
4. MORTAR TO BOND BLOCK MASONRY SHALL BE TYPE "M", 2,500 PSI.
5. THE FIRST BLOCK CELL ADJACENT TO ANY OPENING SHALL BE FILLED WITH CONCRETE.
6. THE FIRST BLOCK CELL ADJACENT TO ANY OPENING FROM 3'TO 8'SHALL BE REINFORCED WITH 1- #5 VERTICAL AND BE FILLED WITH 2500 PSI CONCRETE.

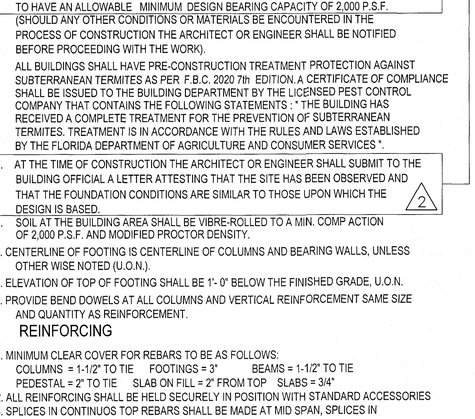

TYP. CONN. OF NEW FTG. TO EXIST'G
SCALE : 3/4" = 1'-0"

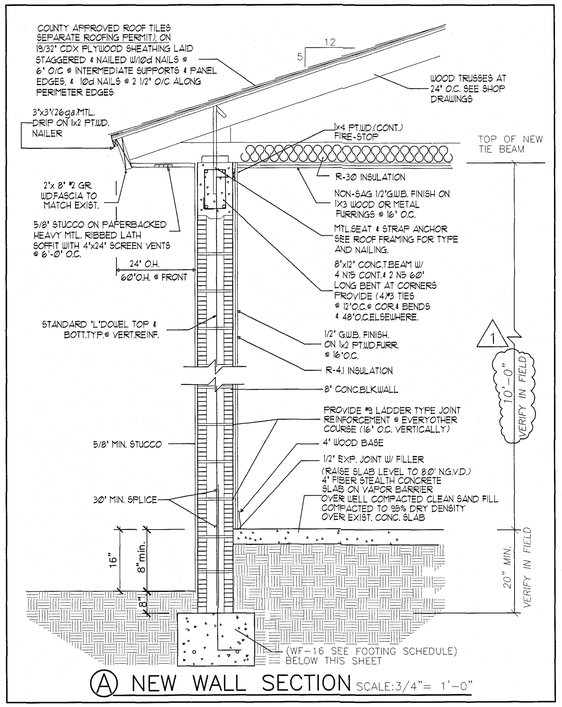

Ⓐ NEW WALL SECTION SCALE:3/4"= 1'-0"

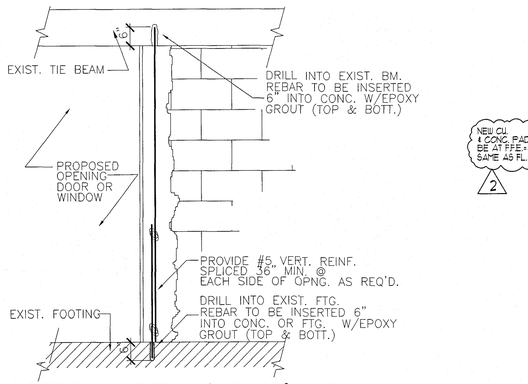

Ⓑ TIE DOWN DETAIL (TYPICAL) AT EXISTING WALL
SCALE: 3/4" = 1'-0"

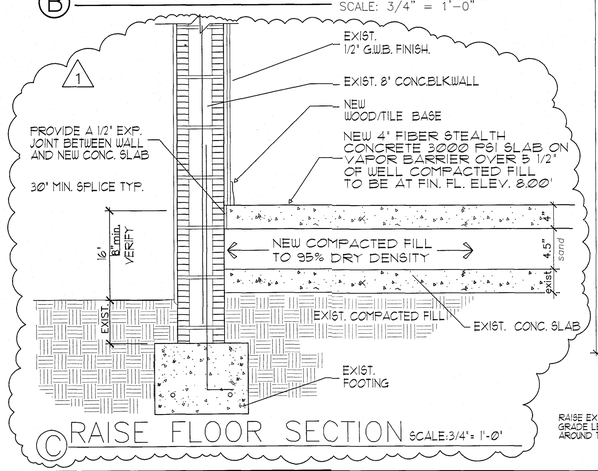

Ⓒ RAISE FLOOR SECTION SCALE:3/4"= 1'-0"

FOOTING/COLUMN SCHEDULE

MARK	SIZE	DEPTH	ELEV TOP FTG	BOTT. REINFORCING A	BOTT. REINFORCING B	TOP REINFORCING C	TOP REINFORCING D	REMARKS
WF-16	16"	16"	+0'-8"	2 #5 CONT.				
C1	8"x 16"	CONCRETE COLUMNS WITH 4#5 VERT. & #3 TIES AT 8" O.C. VERT.						
C2	8"x 8"	CONCRETE STARTER COLUMNS WITH 2#5 VERT.						
C3	8"x 12"	CONCRETE COLUMNS	WITH 4#5 VERT. & #3 TIES AT 8" O.C. VERT.					
MF-4	48"x48"	20"	- 16"	5 #5	5#5	5#5	5#5	
MF-5	60"x60"	20"	- 16"	7 #5	7#5	7#5	7#5	

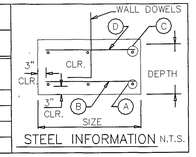

STEEL INFORMATION N.T.S.

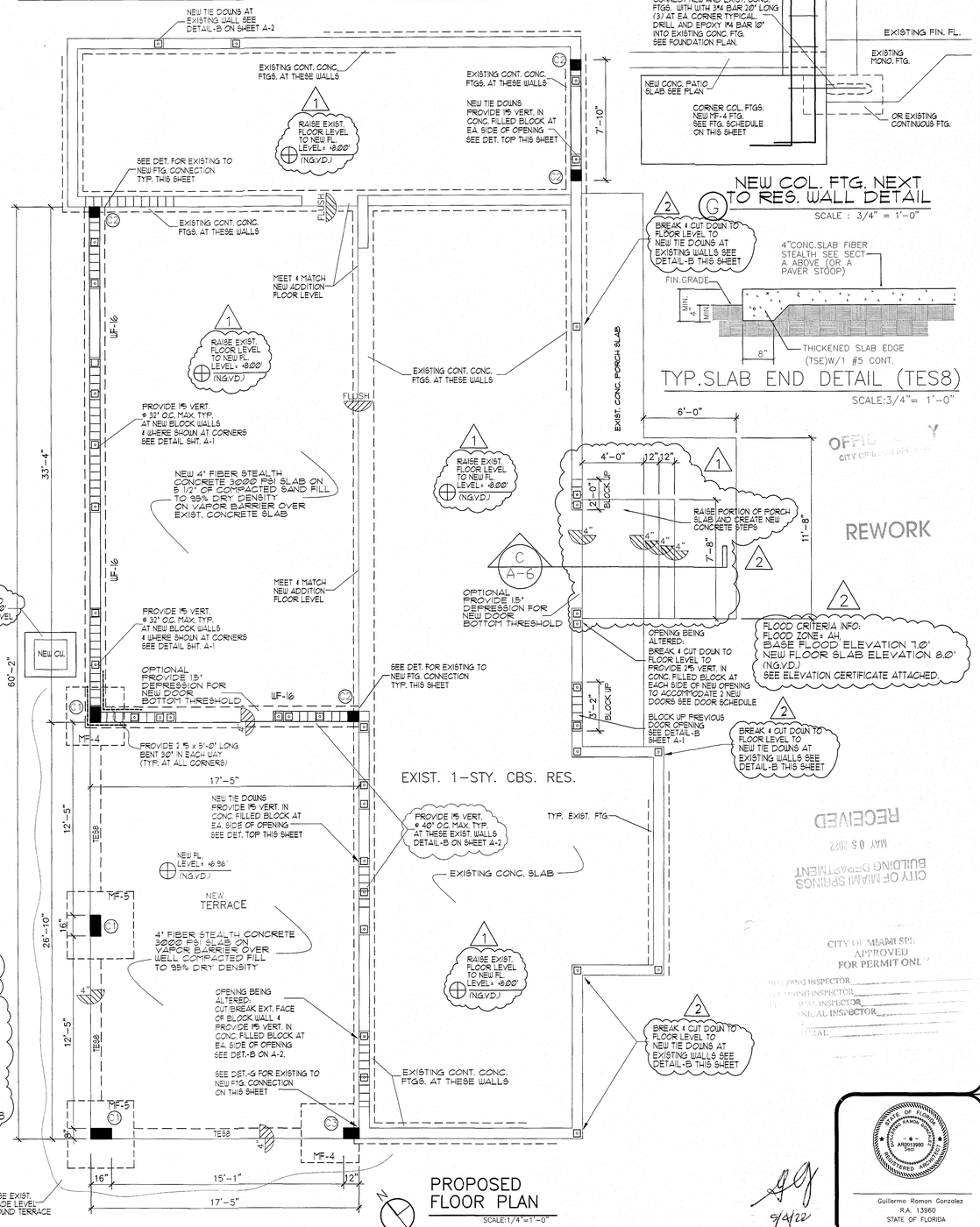

PROPOSED FLOOR PLAN
SCALE:1/4"=1'-0"

NEW COL. FTG. NEXT TO RES. WALL DETAIL

SCALE : 3/4" = 1'-0"

TYP.SLAB END DETAIL (TES8)

SCALE:3/4"= 1'-0"

OFFICIAL COPY
CITY OF MIAMI SPRINGS

RECEIVED
MAY 05 2022
BUILDING DEPARTMENT
CITY OF MIAMI SPRINGS

CITY OF MIAMI SPRINGS
APPROVED
FOR PERMIT ONLY
BUILDING INSPECTOR
PLUMBING INSPECTOR
ELECTRICAL INSPECTOR
MECHANICAL INSPECTOR
FINAL

NO.	DATE
1	1-14-22 REVISED TO RAISE EXIST. FL. LEVEL TO 8.0'
2	3-22-22 REVISED TO SHOW NEW DETAILS.
3	
4	

PROJECT NAME: ADDITION TO RESIDENCE FOR:
OWNER/PH: AMBAR PREVAL 786-587-7391
ADDRESS:200 N. ESPLANADE DRIVE MIAMI SPRINGS, FLORIDA 33166
PROJECT ADD: SAME

Guillermo Ramon Gonzalez
9000 SW. 168th Avenue Miami Florida 33196
Registered Architect #13960
Ph:305-484-8171
Ph:786-237-5154
(assistant)

STATE OF FLORIDA
GUILLERMO RAMON GONZALEZ
AR0013960
REGISTERED ARCHITECT

Guillermo Ramon Gonzalez
R.A. 13960
STATE OF FLORIDA

5/4/22

101521

A-2

GENERAL NOTES:

1. CONCRETE SHALL HAVE 3,000 PSI COMPRESSIVE STRENGTH AT 28 DAYS, UNLESS OTHERWISE NOTED (U.O.N.)
2. ALL REINFORCING STEEL SHALL BE DEFORMED BARS, AND SHALL HAVE A MINIMUM YIELD STRENGTH OF 60,000 PSI GRADE 60, AND MEET ASTM A-615 SPECS.
3. ALL STRUCTURAL STEEL SHALL HAVE A MINIMUM YIELD STRENGTH OF 36,000 PSI, AND MEET ASTM A-36 SPECS.
4. DROP TIE BEAM OVER DOORS EXTEND 8" PAST OPENING ON BOTH SIDES AND ADD 2-#5 BARS FOR EVERY ADDITIONAL 8" OF BEAM HEIGHT (2 ADDITIONAL BARS MIN.)

FOUNDATIONS

SOIL STATEMENT:

1. THE SOIL AT THIS SITE HAS BEEN OBSERVED BY THE ARCHITECT OR ENGINEER TO BE COMPOSED OF SAND AND ROCKS AND CAN BE CONSIDERED TO HAVE AN ALLOWABLE MINIMUM DESIGN BEARING CAPACITY OF 2,000 P.S.F. (SHOULD ANY OTHER CONDITIONS OR MATERIALS BE ENCOUNTERED IN THE PROCESS OF CONSTRUCTION THE ARCHITECT OR ENGINEER SHALL BE NOTIFIED BEFORE PROCEEDING WITH THE WORK).
   ALL BUILDINGS SHALL HAVE PRE-CONSTRUCTION TREATMENT PROTECTION AGAINST SUBTERRANEAN TERMITES AS PER F.B.C. 2020 7th EDITION.A CERTIFICATE OF COMPLIANCE SHALL BE ISSUED TO THE BUILDING DEPARTMENT BY THE LICENSED PEST CONTROL COMPANY THAT CONTAINS THE FOLLOWING STATEMENTS : " THE BUILDING HAS RECEIVED A COMPLETE TREATMENT FOR THE PREVENTION OF SUBTERRANEAN TERMITES. TREATMENT IS IN ACCORDANCE WITH THE RULES AND LAWS ESTABLISHED BY THE FLORIDA DEPARTMENT OF AGRICULTURE AND CONSUMER SERVICES ".
2. AT THE TIME OF CONSTRUCTION THE ARCHITECT OR ENGINEER SHALL SUBMIT TO THE BUILDING OFFICIAL A LETTER ATTESTING THAT THE SITE HAS BEEN OBSERVED AND THAT THE FOUNDATION CONDITIONS ARE SIMILAR TO THOSE UPON WHICH THE DESIGN IS BASED.
3. SOIL AT THE BUILDING AREA SHALL BE VIBRE-ROLLED TO A MIN. COMP ACTION OF 2,000 P.S.F. AND MODIFIED PROCTOR DENSITY.
4. CENTERLINE OF FOOTING IS CENTERLINE OF COLUMNS AND BEARING WALLS, UNLESS OTHER WISE NOTED (U.O.N.).
5. ELEVATION OF TOP OF FOOTING SHALL BE 1'- 0" BELOW THE FINISHED GRADE, U.O.N.
6. PROVIDE BEND DOWELS AT ALL COLUMNS AND VERTICAL REINFORCEMENT SAME SIZE AND QUANTITY AS REINFORCEMENT.

REINFORCING

1. MINIMUM CLEAR COVER FOR REBARS TO BE AS FOLLOWS:
   COLUMNS = 1-1/2" TO TIE   FOOTINGS = 3"   BEAMS = 1-1/2" TO TIE
   PEDESTAL = 2" TO TIE   SLAB ON FILL = 2" FROM TOP   SLABS = 3/4"
2. ALL REINFORCING SHALL BE HELD SECURELY IN POSITION WITH STANDARD ACCESSORIES
3. SPLICES IN CONTINUOS TOP REBARS SHALL BE MADE AT MID SPAN, SPLICES IN CONTINUOS BOTTOM REBARS SHALL BE OVER SUPPORT(S).
4. SPLICES IN REINFORCING, WHERE PERMITTED, SHALL BE AS FOLLOWS:
   COLUMN VERT.BARS = 30 BAR DIA.   TEMPERATURE REBARS = 12" MIN.
   FOOTING DOWELS = 30 BAR DIA. + 8"   WELDED WIRE MESH = 6"
   TENSION SPLICE = CLASS "C"   ALL OTHERS = 30 BAR DIA.
5. PROVIDE 2 N°5 60" LONG BEND BARS AT CORNERS OF BEAMS.

SLAB

4" FIBER STEALTH CONCRETE SLAB 3000 PSI

1. ~~SLAB SHALL BE 2500 PSI CONCRETE (MIN.), 4" THICK, REINFORCED WITH 6"X 6" - 10/10 (GAUGE) WELDED WIRE MESH (W.W.M.),~~ ON WELL COMPACTED FILL.
2. FILL MATERIAL SHALL BE CLEAN SAND AND ROCK COMPACTED TO 95% OF MAXIMUM DENSITY IN LIFTS NOT TO EXCEED 12" IN DEPTH.
3. PLACE CONCRETE SLABS IN A CHECKERBOARD PATTERN, NO PANEL EXCEEDING 25 FEET OF LENGTH, OR 625 SF IN AREA, OR USE CONTROL JOINTS.
4. ELEVATION TOP OF CONCRETE SLAB SHOWN THUSLY; OR MATCH EXISTING ADJACENT FLOOR ELEVATION.
5. WALLS, COLUMNS, AND BEAMS, PENETRATING SLAB ON FILL, SHALL BE ISOLATED BY 1/2" PRE MOLDED JOINT FILLER, UNLESS OTHERWISE NOTED (U.O.N.).
6. SLABS SHALL BE PLACED OVER 1 LAYER OF PLASTIC MEMBRANE, SUCH AS 6 MIL VISQUEEN, OR SIMILAR.
7. SLABS ON FILL SHALL BE CURED CONTINUOUSLY FOR 5 DAYS.

MASONRY

1. CONCRETE MASONRY UNITS (CMU), OR "BLOCKS", SHALL CONFORM TO ASTM C-90 SPECS.
2. COMPRESSIVE STRENGTH OF MASONRY UNITS SHALL BE NOT LESS THAN FM=1500 PSI.
3. ALL BLOCK WALLS SHALL BE LAID IN A FULL BEDDING OF MORTAR, WITH A COMPLETE COVERAGE OF THE BLOCK'S FACE SHELL (HORIZONTALLY) AND MORTAR GROOVES (VERTICALLY). AND REINFORCED WITH #8 TRUSS TYPE JOINT REINFORCEMENT @ EVERY OTHER COURSE (16"O.C.VERTICALLY)
4. MORTAR TO BOND BLOCK MASONRY SHALL BE TYPE "M", 2,500 PSI.
5. THE FIRST BLOCK CELL ADJACENT TO ANY OPENING SHALL BE FILLED WITH CONCRETE.
6. THE FIRST BLOCK CELL ADJACENT TO ANY OPENING FROM 3'TO 8'SHALL BE REINFORCED WITH 1- #5 VERTICAL AND BE FILLED WITH 2500 PSI CONCRETE.

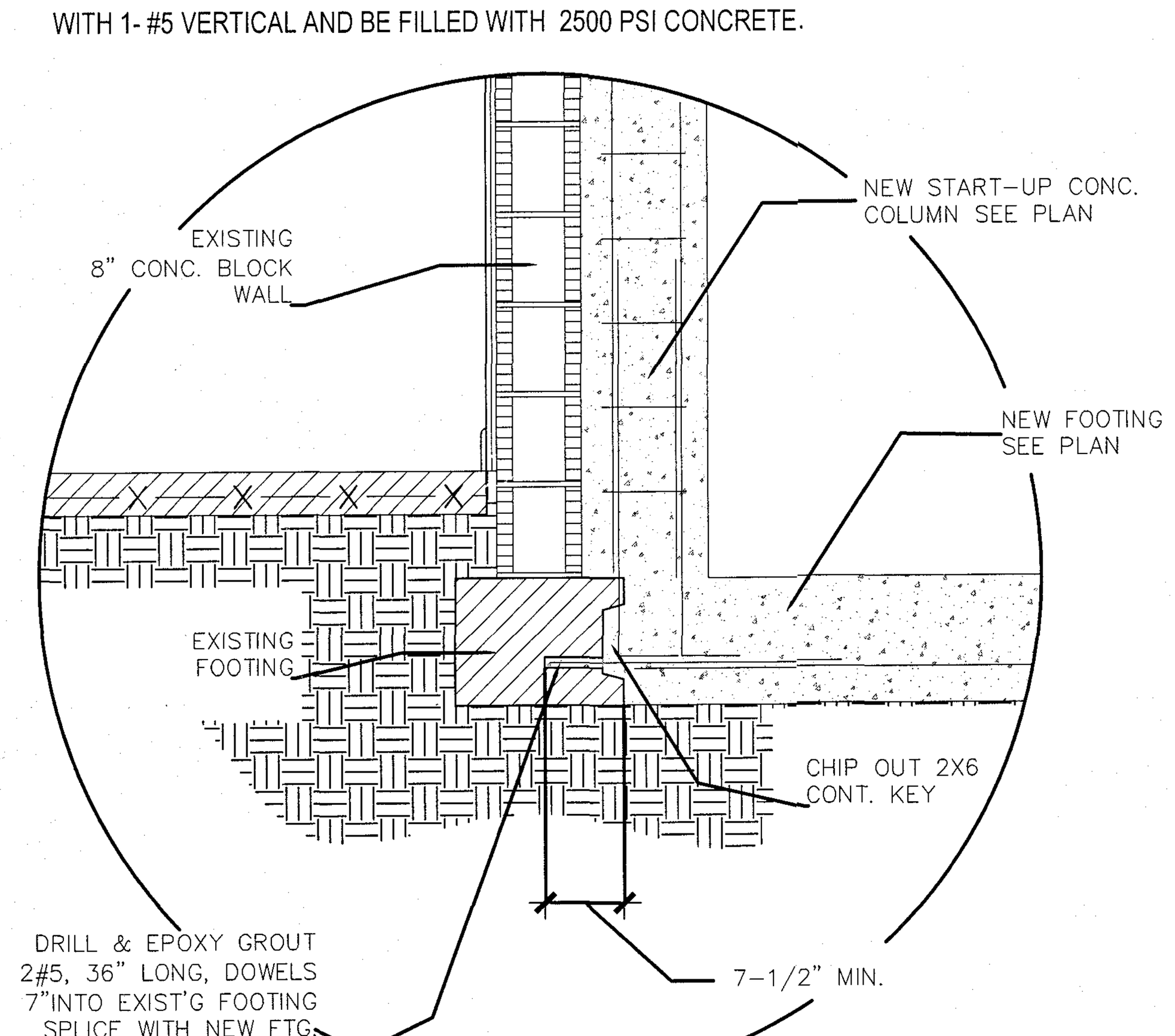

TYP. CONN. OF NEW FTG. TO EXIST'G
SCALE : 3/4" = 1'-0"

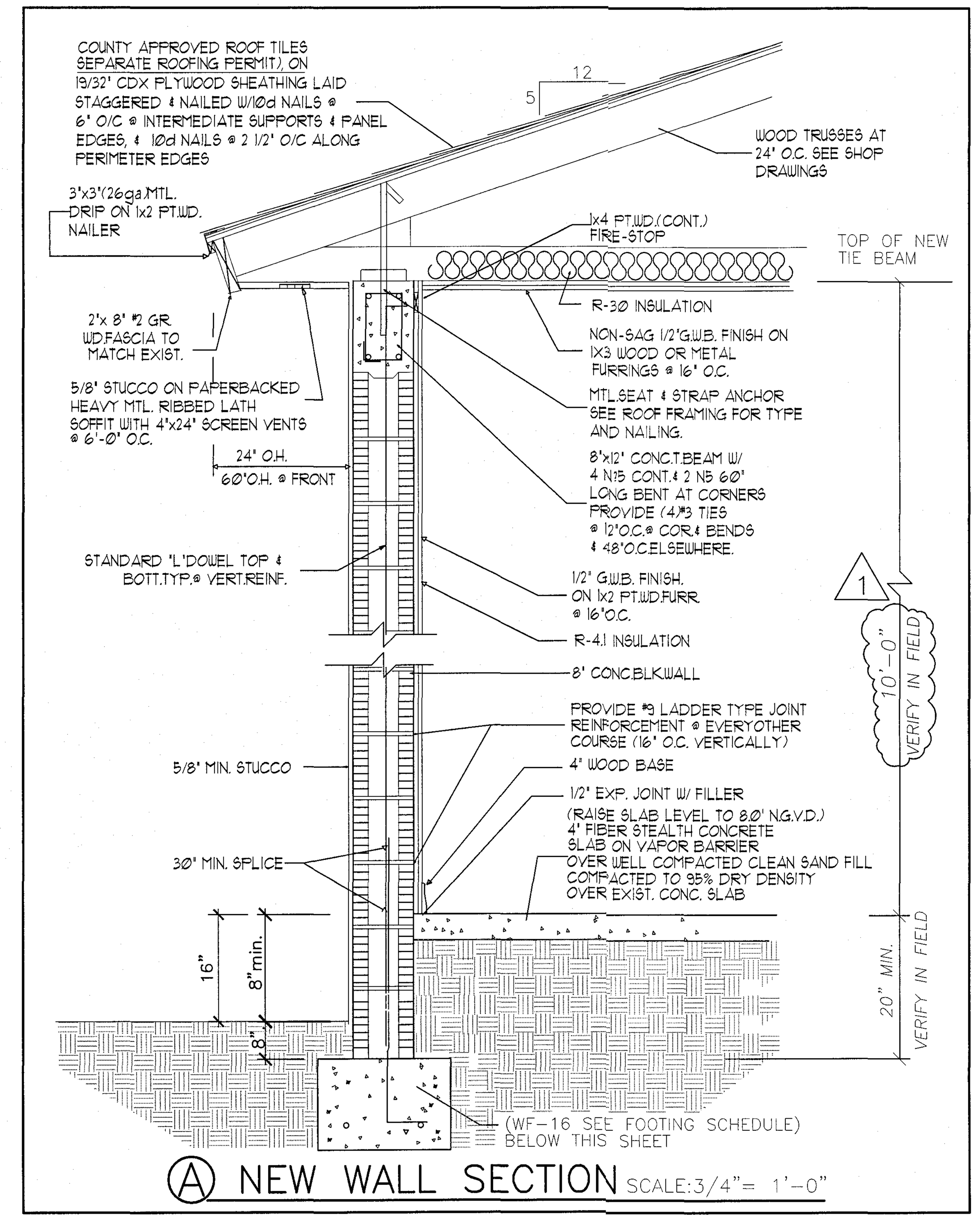

Ⓐ NEW WALL SECTION SCALE:3/4"= 1'-0"

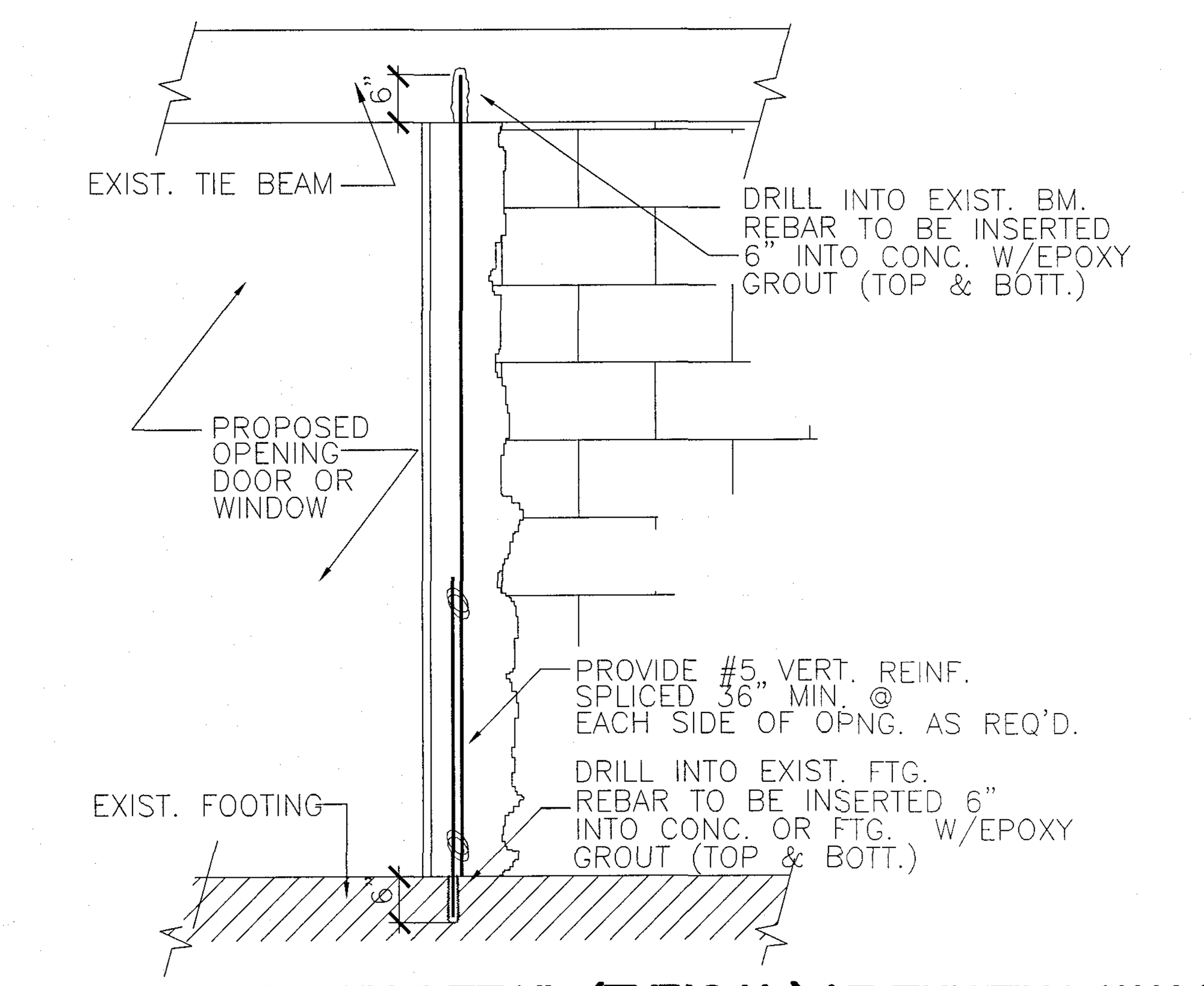

Ⓑ TIE DOWN DETAIL (TYPICAL) AT EXISTING WALL
SCALE: 3/4" = 1'-0"

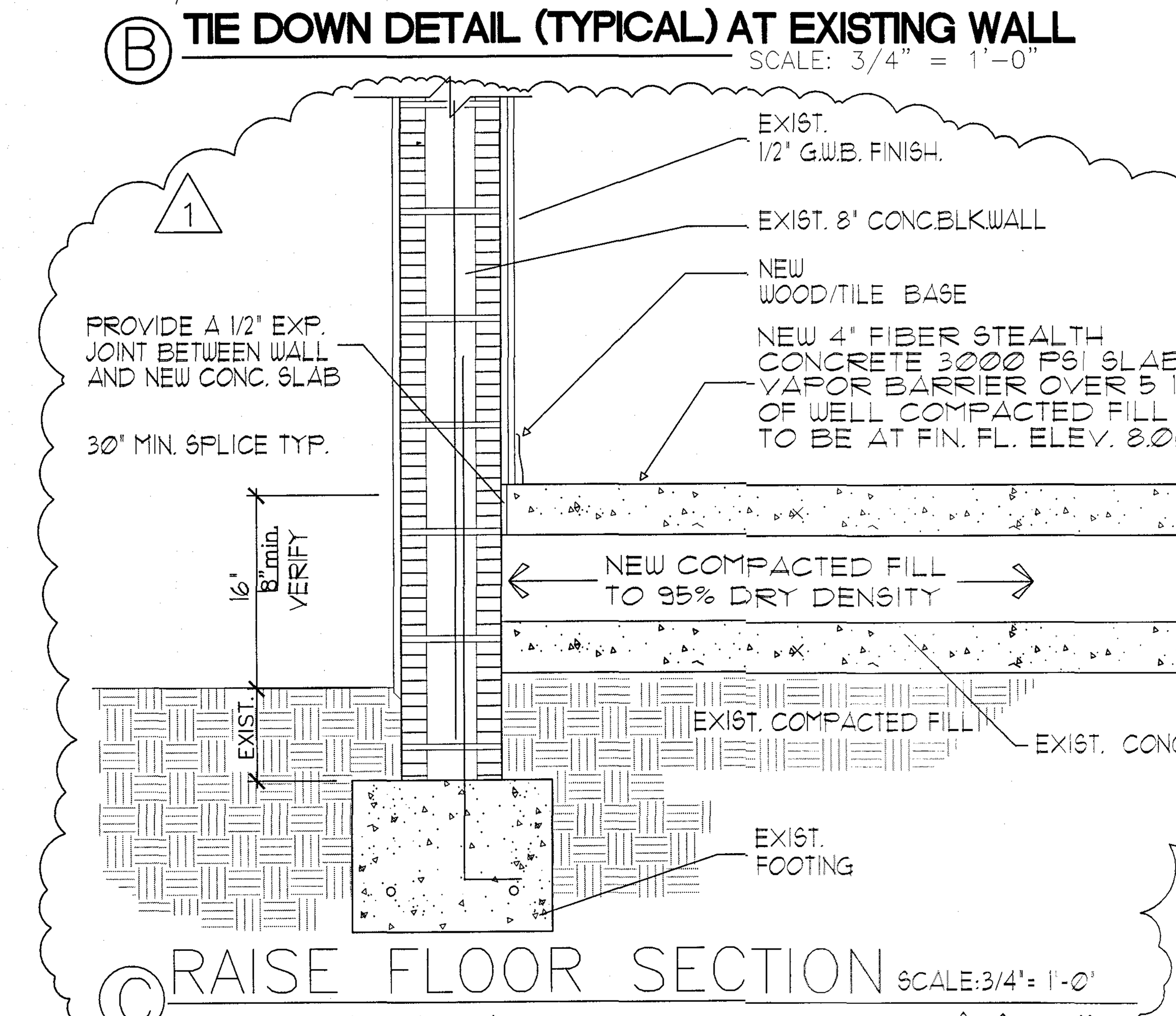

Ⓒ RAISE FLOOR SECTION SCALE:3/4"= 1'-0"

FOOTING/COLUMN SCHEDULE								
MARK	SIZE	DEPTH	ELEV TOP FTG	BOTT. REINFORCING A	BOTT. REINFORCING B	TOP REINFORCING C	TOP REINFORCING D	REMARKS
WF-16	16"	16"	+0'-8"	2 #5 CONT.				
C1	8"x 16"	CONCRETE COLUMNS WITH 4#5 VERT. & #3 TIES AT 8" O.C. VERT.						
C2	8"x 8"	CONCRETE STARTER COLUMNS WITH 2#5 VERT.						
C3	8"x 12"	CONCRETE COLUMNS WITH 4#5 VERT. & #3 TIES AT 8" O.C. VERT.						
MF-4	48"x48"	20"	- 16"	5 #5	5#5	5#5	5#5	
MF-5	60"x60"	20"	- 16"	7 #5	7#5	7#5	7#5	

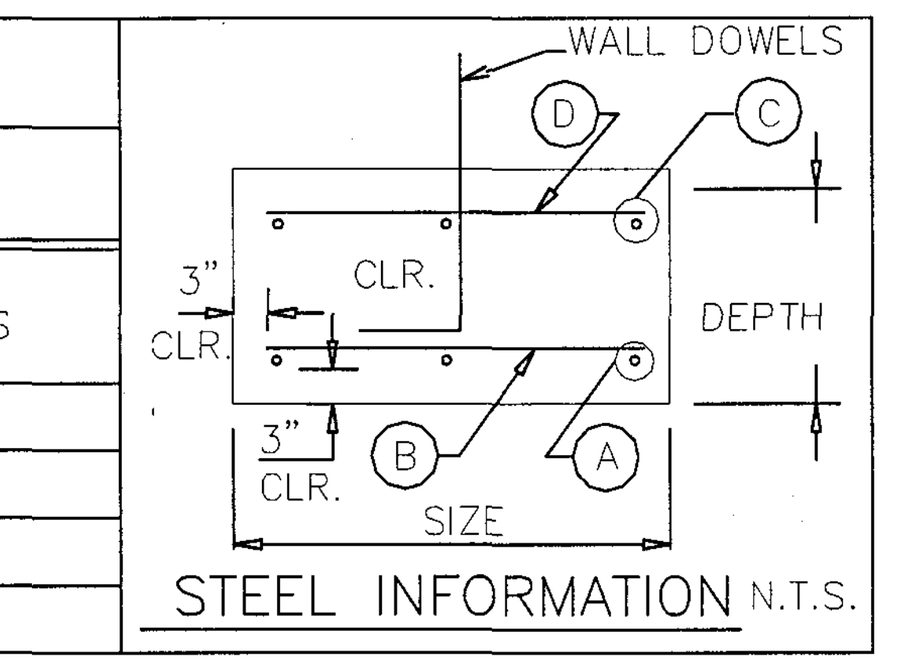

STEEL INFORMATION N.T.S.

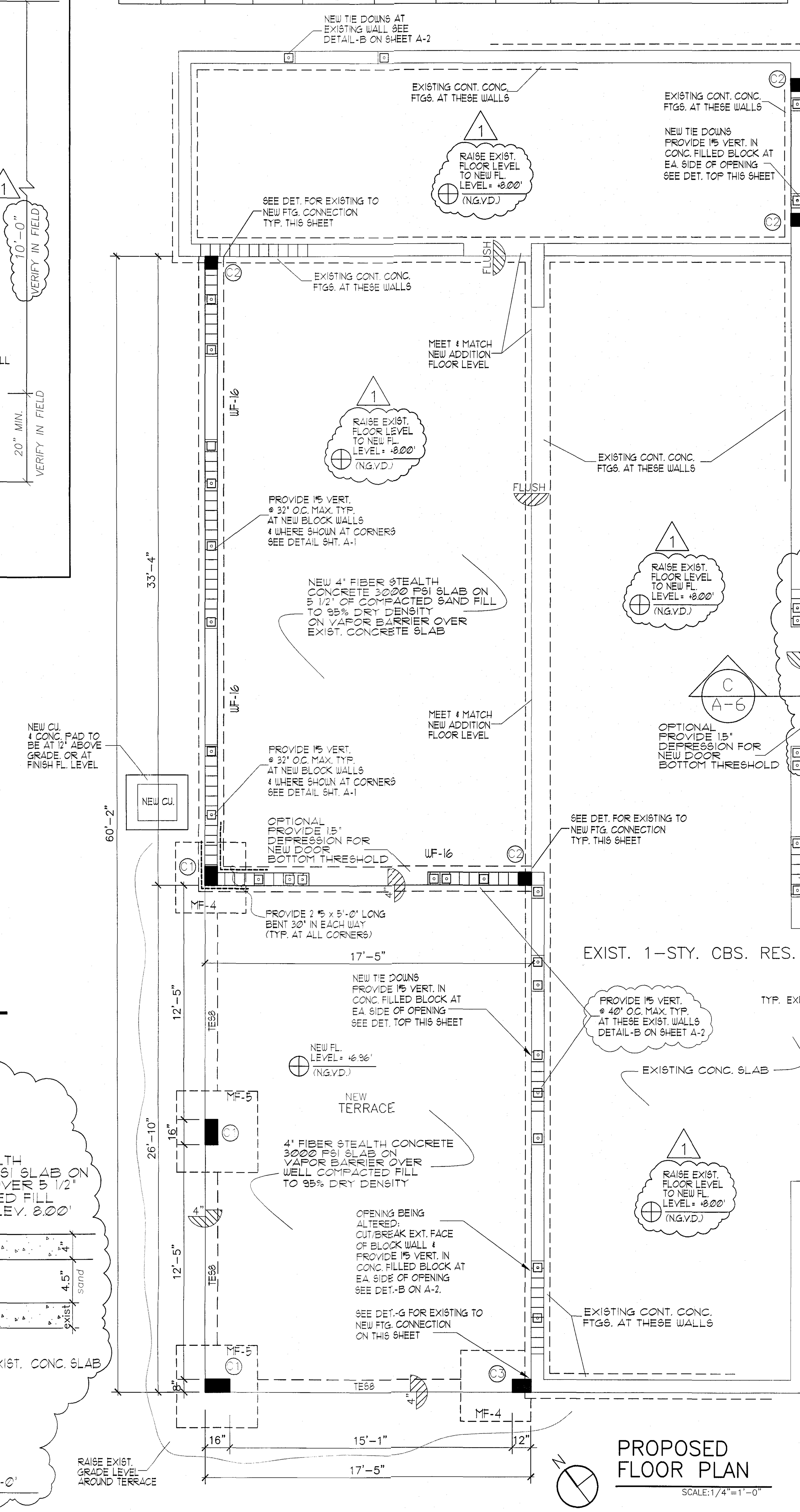

PROPOSED FLOOR PLAN
SCALE:1/4"=1'-0"

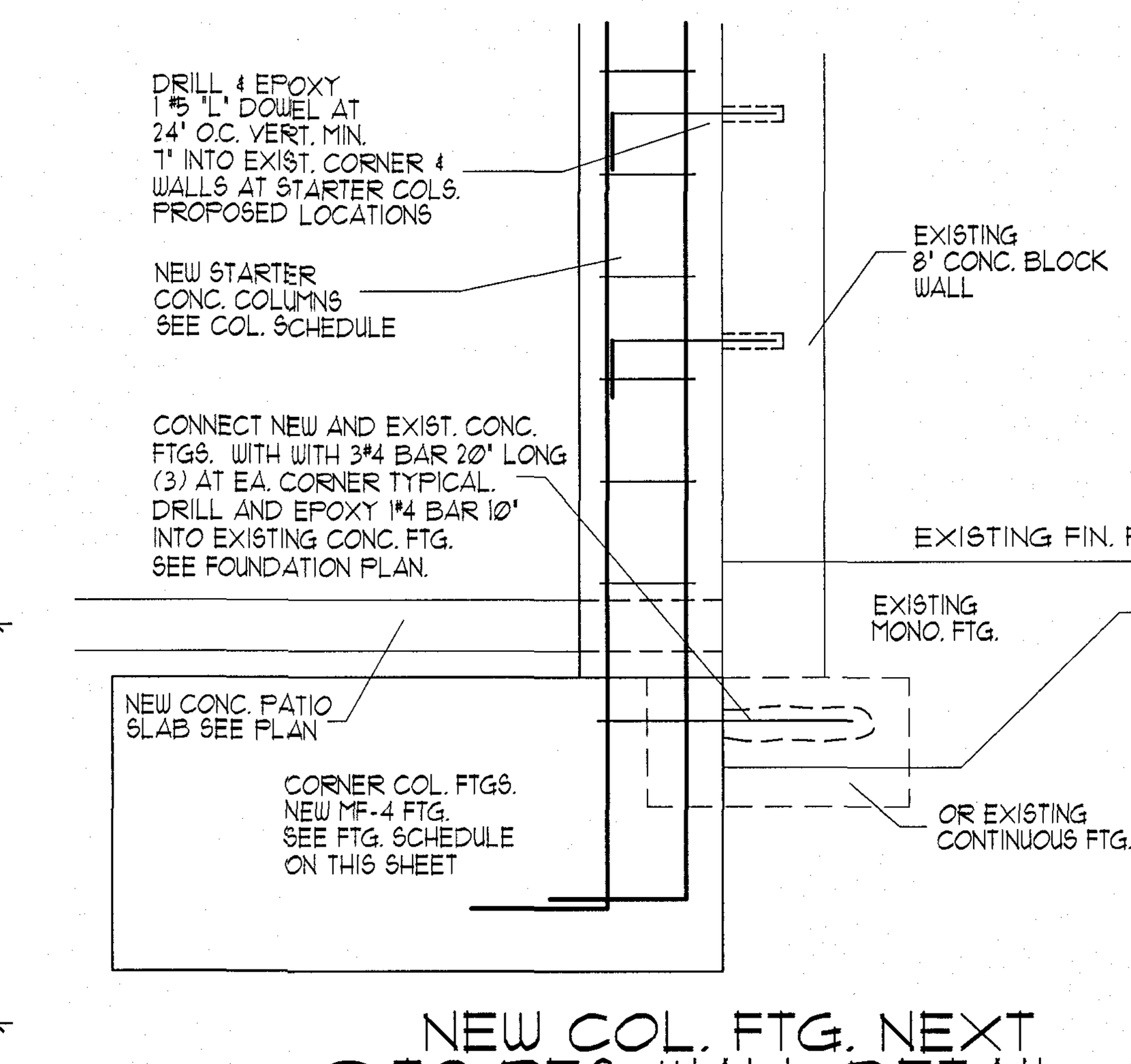

Ⓖ NEW COL. FTG. NEXT TO RES. WALL DETAIL
SCALE : 3/4" = 1'-0"

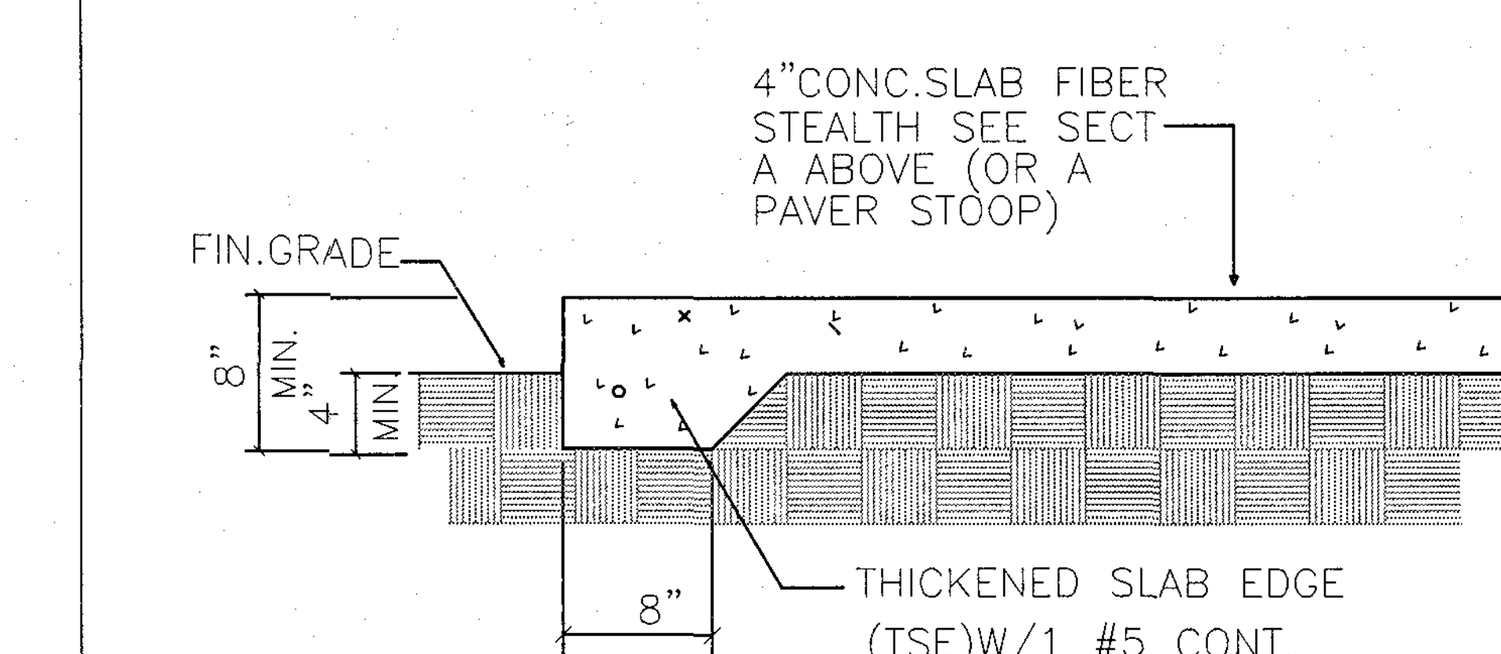

TYP.SLAB END DETAIL (TES8)
SCALE:3/4"= 1'-0"

NO.	DATE	
1	1-14-22	REVISED TO RAISE EXIST. FL. LEVEL TO 8.0
2	3-22-22	REVISED TO SHOW NEW DETAILS.
3	•	
4	•	

DESG • DRWN • CHKD • APRV • DATE •

PROJECT NAME: ADDITION TO RESIDENCE FOR:
OWNER/PH: AMBAR PREVAL 786-587-7391
ADDRESS:200 N. ESPLANADE DRIVE MIAMI SPRINGS, FLORIDA 33166
PROJECT ADD: SAME

Guillermo Ramon Gonzalez
9000 SW. 168th Avenue Miami Florida 33196 Ph:305-484-8171
Registered Architect #13960 Ph:786-237-5154 (assistant)

CITY OF MIAMI SPRINGS BUILDING DEPARTMENT
APR 12 2022
RECEIVED REWORK

CITY OF MIAMI SPRINGS
APPROVED
FOR PERMIT ONLY
BUILDING INSPECTOR
PLUMBING INSPECTOR
ELECTRICAL INSPECTOR
MECHANICAL INSPECTOR

STATE OF FLORIDA GUILLERMO RAMON GONZALEZ AR0013960 Seal REGISTERED ARCHITECT

Guillermo Ramon Gonzalez
R.A. 13960
STATE OF FLORIDA

101521

A-2

GENERAL NOTES:

1. CONCRETE SHALL HAVE 3,000 PSI COMPRESSIVE STRENGTH AT 28 DAYS, UNLESS OTHERWISE NOTED (U.O.N.)
2. ALL REINFORCING STEEL SHALL BE DEFORMED BARS, AND SHALL HAVE A MINIMUM YIELD STRENGTH OF 60,000 PSI GRADE 60, AND MEET ASTM A-615 SPECS.
3. ALL STRUCTURAL STEEL SHALL HAVE A MINIMUM YIELD STRENGTH OF 36,000 PSI, AND MEET ASTM A-36 SPECS.
4. DROP TIE BEAM OVER DOORS EXTEND 8" PAST OPENING ON BOTH SIDES AND ADD 2-#5 BARS FOR EVERY ADDITIONAL 8" OF BEAM HEIGHT (2 ADDITIONAL BARS MIN.)

FOUNDATIONS

SOIL STATEMENT:

1. THE SOIL AT THIS SITE HAS BEEN OBSERVED BY THE ARCHITECT OR ENGINEER TO BE COMPOSED OF SAND AND ROCKS AND CAN BE CONSIDERED TO HAVE AN ALLOWABLE MINIMUM DESIGN BEARING CAPACITY OF 2,000 P.S.F. (SHOULD ANY OTHER CONDITIONS OR MATERIALS BE ENCOUNTERED IN THE PROCESS OF CONSTRUCTION THE ARCHITECT OR ENGINEER SHALL BE NOTIFIED BEFORE PROCEEDING WITH THE WORK).

   ALL BUILDINGS SHALL HAVE PRE-CONSTRUCTION TREATMENT PROTECTION AGAINST SUBTERRANEAN TERMITES AS PER F.B.C. 2020 7th EDITION.A CERTIFICATE OF COMPLIANCE SHALL BE ISSUED TO THE BUILDING DEPARTMENT BY THE LICENSED PEST CONTROL COMPANY THAT CONTAINS THE FOLLOWING STATEMENTS : " THE BUILDING HAS RECEIVED A COMPLETE TREATMENT FOR THE PREVENTION OF SUBTERRANEAN TERMITES. TREATMENT IS IN ACCORDANCE WITH THE RULES AND LAWS ESTABLISHED BY THE FLORIDA DEPARTMENT OF AGRICULTURE AND CONSUMER SERVICES ".
2. AT THE TIME OF CONSTRUCTION THE ARCHITECT OR ENGINEER SHALL SUBMIT TO THE BUILDING OFFICIAL A LETTER ATTESTING THAT THE SITE HAS BEEN OBSERVED AND THAT THE FOUNDATION CONDITIONS ARE SIMILAR TO THOSE UPON WHICH THE DESIGN IS BASED.
3. SOIL AT THE BUILDING AREA SHALL BE VIBRE-ROLLED TO A MIN. COMP ACTION OF 2,000 P.S.F. AND MODIFIED PROCTOR DENSITY.
4. CENTERLINE OF FOOTING IS CENTERLINE OF COLUMNS AND BEARING WALLS, UNLESS OTHER WISE NOTED (U.O.N.).
5. ELEVATION OF TOP OF FOOTING SHALL BE 1'- 0" BELOW THE FINISHED GRADE, U.O.N.
6. PROVIDE BEND DOWELS AT ALL COLUMNS AND VERTICAL REINFORCEMENT SAME SIZE AND QUANTITY AS REINFORCEMENT.

REINFORCING

1. MINIMUM CLEAR COVER FOR REBARS TO BE AS FOLLOWS:
   COLUMNS = 1-1/2" TO TIE FOOTINGS = 3" BEAMS = 1-1/2" TO TIE
   PEDESTAL = 2" TO TIE SLAB ON FILL = 2" FROM TOP SLABS = 3/4"
2. ALL REINFORCING SHALL BE HELD SECURELY IN POSITION WITH STANDARD ACCESSORIES
3. SPLICES IN CONTINUOS TOP REBARS SHALL BE MADE AT MID SPAN, SPLICES IN CONTINUOS BOTTOM REBARS SHALL BE OVER SUPPORT(S).
4. SPLICES IN REINFORCING, WHERE PERMITTED, SHALL BE AS FOLLOWS:
   COLUMN VERT.BARS = 30 BAR DIA. TEMPERATURE REBARS = 12" MIN.
   FOOTING DOWELS = 30 BAR DIA. + 8" WELDED WIRE MESH = 6"
   TENSION SPLICE = CLASS "C" ALL OTHERS = 30 BAR DIA.
5. PROVIDE 2 N°5 60" LONG BEND BARS AT CORNERS OF BEAMS.

SLAB
4" FIBER STEALTH CONCRETE SLAB 3000 PSI

1. ~~SLAB SHALL BE 2500 PSI CONCRETE (MIN.), 4" THICK, REINFORCED WITH 6"X 6" - 10/10 (GAUGE) WELDED WIRE MESH (W.W.M.),~~ ON WELL COMPACTED FILL.
2. FILL MATERIAL SHALL BE CLEAN SAND AND ROCK COMPACTED TO 95% OF MAXIMUM DENSITY IN LIFTS NOT TO EXCEED 12" IN DEPTH.
3. PLACE CONCRETE SLABS IN A CHECKERBOARD PATTERN, NO PANEL EXCEEDING 25 FEET OF LENGTH, OR 625 SF IN AREA, OR USE CONTROL JOINTS.
4. ELEVATION TOP OF CONCRETE SLAB SHOWN THUSLY; OR MATCH EXISTING ADJACENT FLOOR ELEVATION.
5. WALLS, COLUMNS, AND BEAMS, PENETRATING SLAB ON FILL, SHALL BE ISOLATED BY 1/2" PRE MOLDED JOINT FILLER, UNLESS OTHERWISE NOTED (U.O.N.).
6. SLABS SHALL BE PLACED OVER 1 LAYER OF PLASTIC MEMBRANE, SUCH AS 6 MIL VISQUEEN, OR SIMILAR.
7. SLABS ON FILL SHALL BE CURED CONTINUOUSLY FOR 5 DAYS.

MASONRY

1. CONCRETE MASONRY UNITS (CMU), OR "BLOCKS", SHALL CONFORM TO ASTM C-90 SPECS.
2. COMPRESSIVE STRENGTH OF MASONRY UNITS SHALL BE NOT LESS THAN FM=1500 PSI.
3. ALL BLOCK WALLS SHALL BE LAID IN A FULL BEDDING OF MORTAR, WITH A COMPLETE COVERAGE OF THE BLOCK'S FACE SHELL (HORIZONTALLY) AND MORTAR GROOVES (VERTICALLY). AND REINFORCED WITH #8 TRUSS TYPE JOINT REINFORCEMENT @ EVERY OTHER COURSE (16"O.C.VERTICALLY)
4. MORTAR TO BOND BLOCK MASONRY SHALL BE TYPE "M", 2,500 PSI.
5. THE FIRST BLOCK CELL ADJACENT TO ANY OPENING SHALL BE FILLED WITH CONCRETE.
6. THE FIRST BLOCK CELL ADJACENT TO ANY OPENING FROM 3'TO 8'SHALL BE REINFORCED WITH 1- #5 VERTICAL AND BE FILLED WITH 2500 PSI CONCRETE.

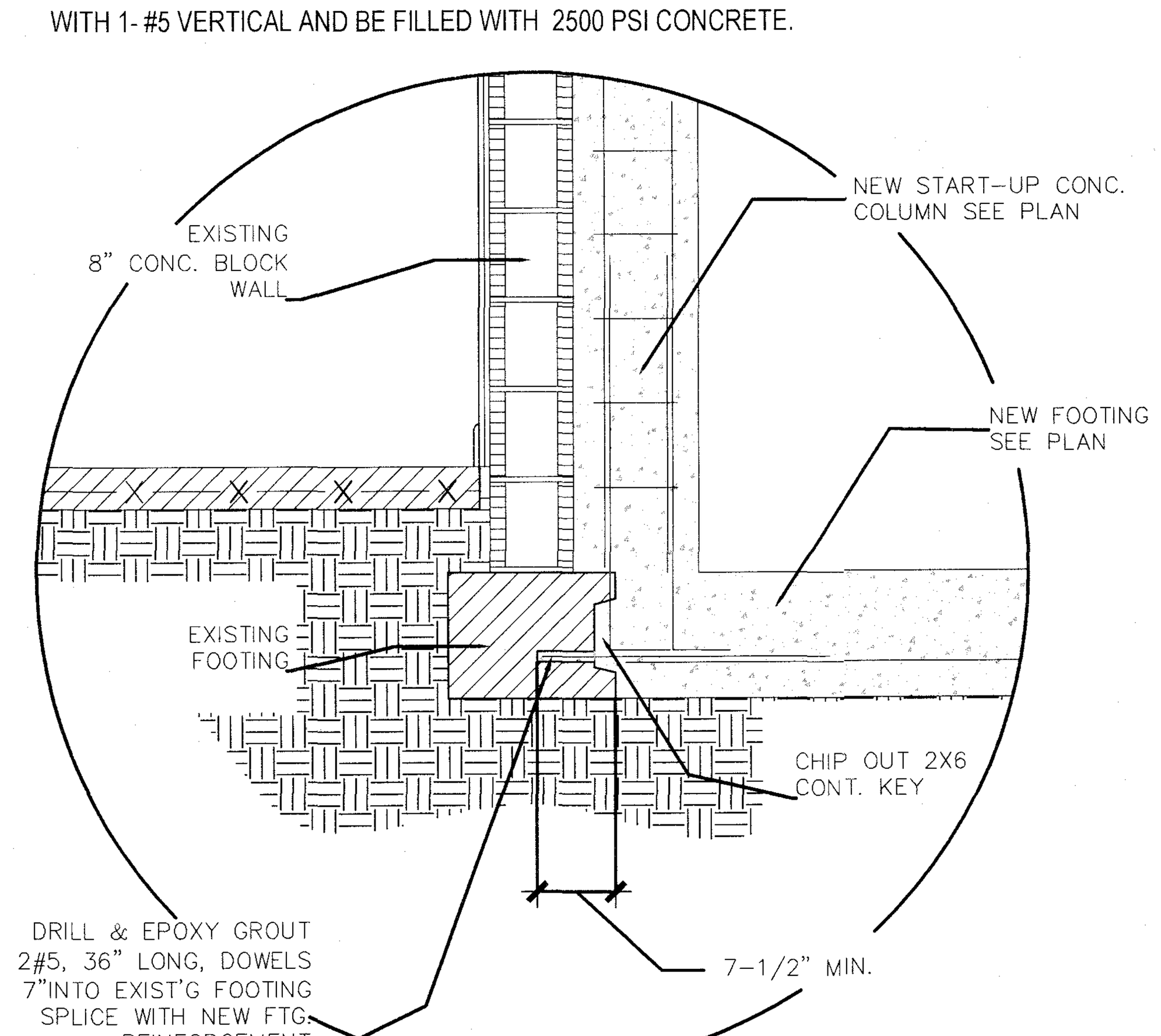

TYP. CONN. OF NEW FTG. TO EXIST'G
SCALE : 3/4" = 1'-0"

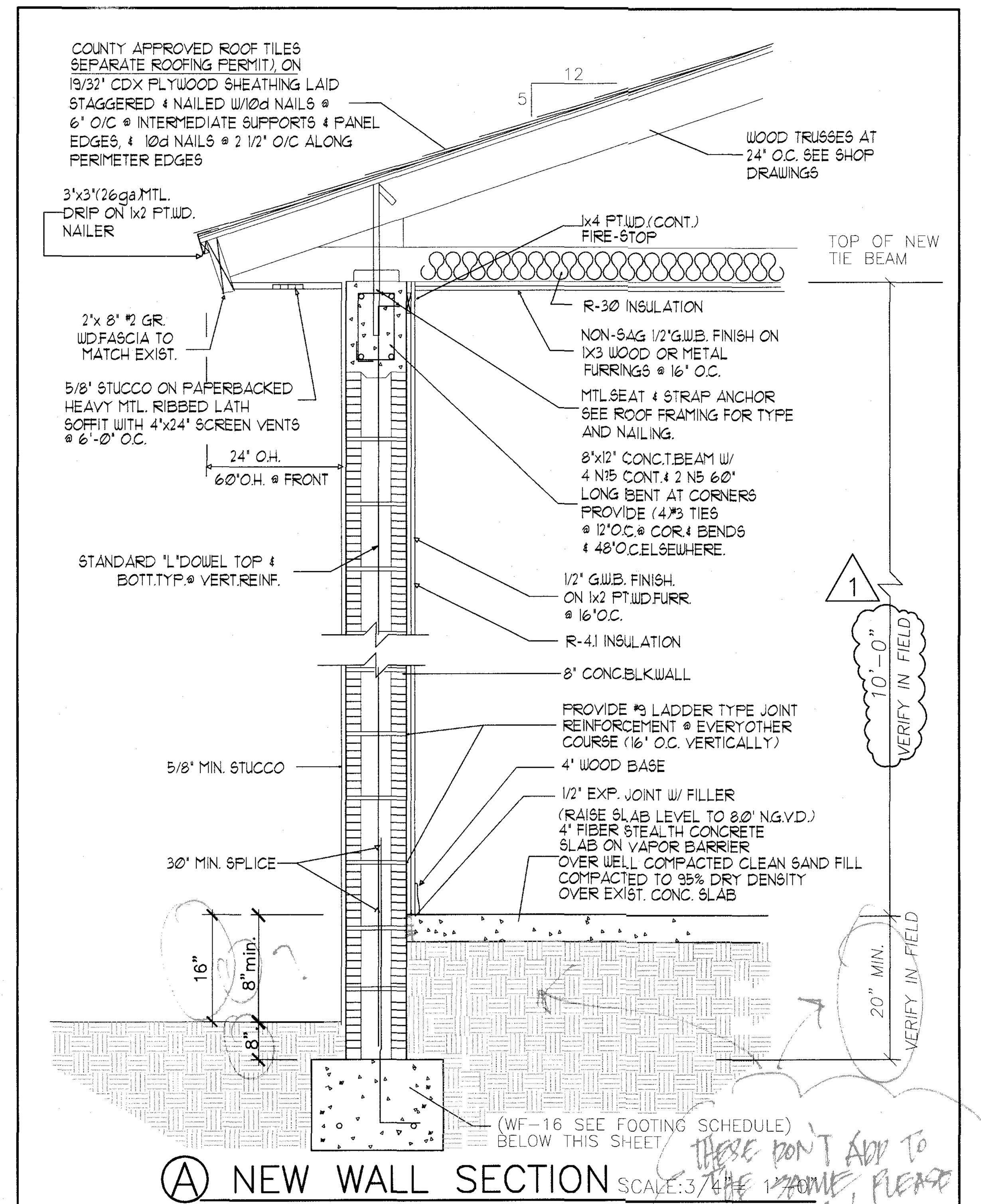

A NEW WALL SECTION SCALE:3/4"=1'-0"

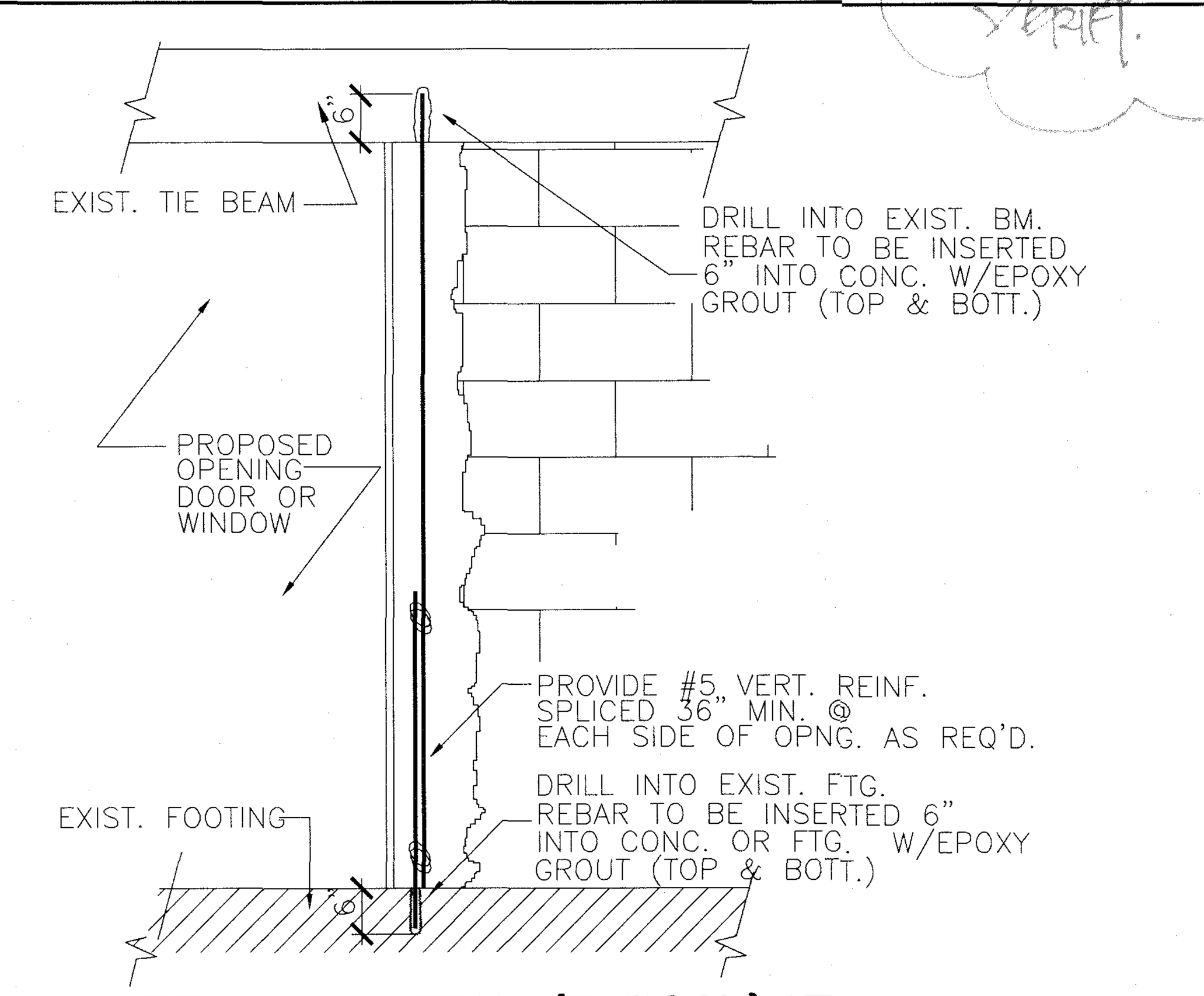

B **TIE DOWN DETAIL (TYPICAL) AT EXISTING WALL**
SCALE: 3/4" = 1'-0"

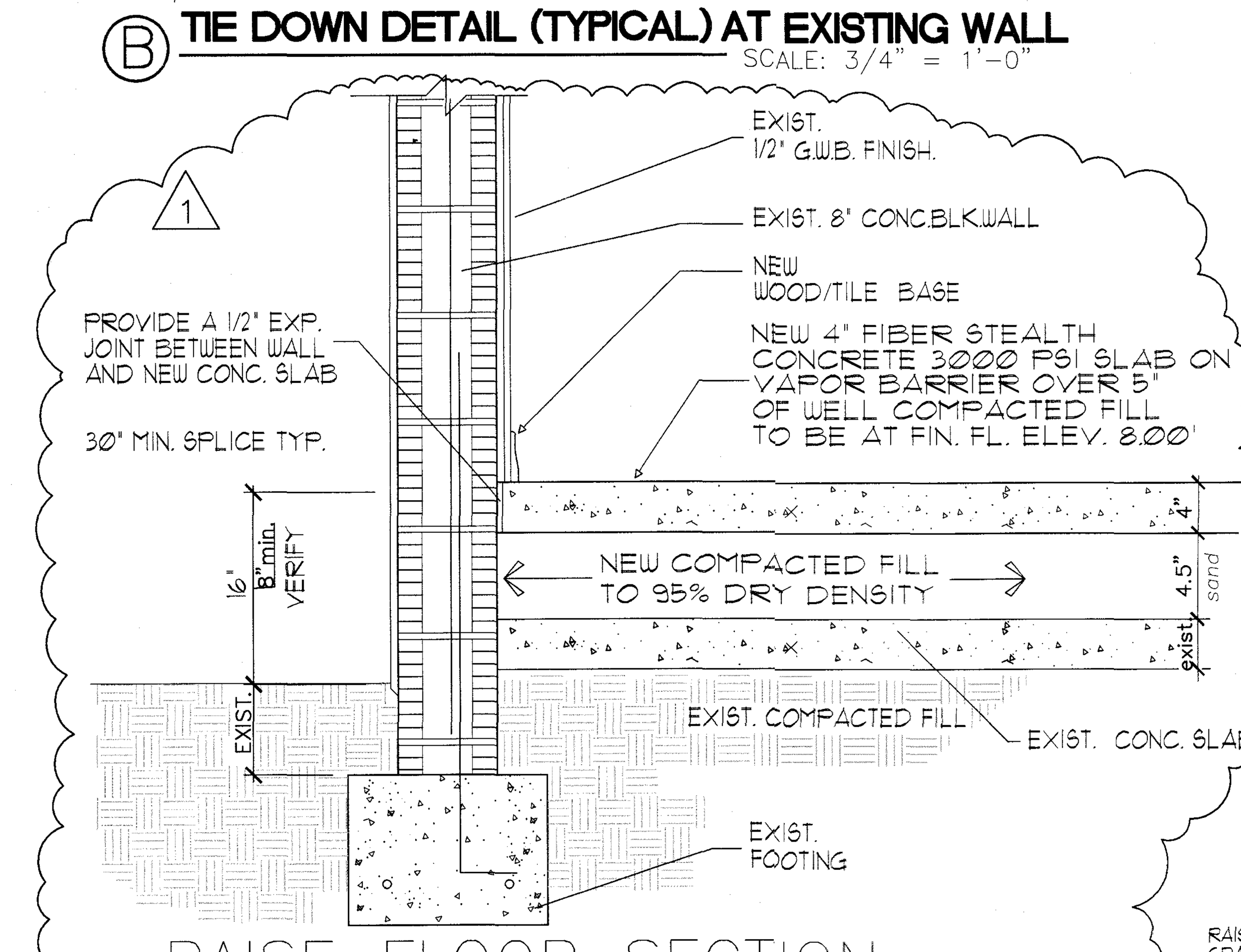

C RAISE FLOOR SECTION SCALE:3/4"= 1'-0"

FOOTING/COLUMN SCHEDULE								
MARK	SIZE	DEPTH	ELEV TOP FTG	BOTT. REINFORCING A	BOTT. REINFORCING B	TOP REINFORCING C	TOP REINFORCING D	REMARKS
WF-16	16"	16"	+0'-8"	2 #5 CONT.				
C1	8"x 16"	CONCRETE COLUMNS WITH 4#5 VERT. & #3 TIES AT 8" O.C. VERT.						
C2	8"x 8"	CONCRETE STARTER COLUMNS WITH 2#5 VERT.						
C3	8"x 12"	CONCRETE COLUMNS WITH 4#5 VERT. & #3 TIES AT 8" O.C. VERT.						
MF-4	48"x48"	20"	- 16"	5 #5	5#5	5#5	5#5	
MF-5	60"x60"	20"	- 12"	7 #5	7#5	7#5	7#5	

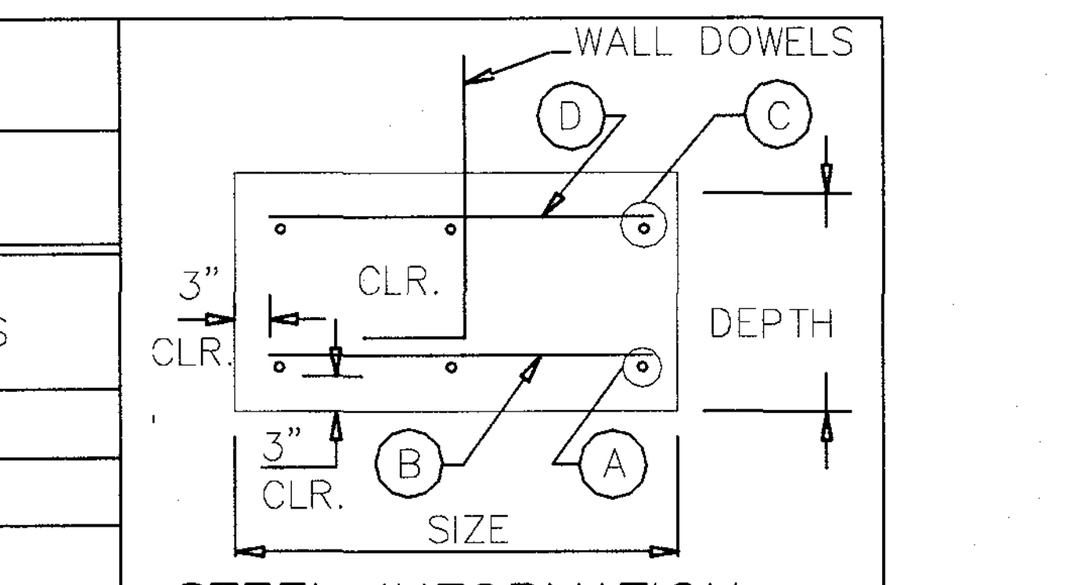

STEEL INFORMATION N.T.S.

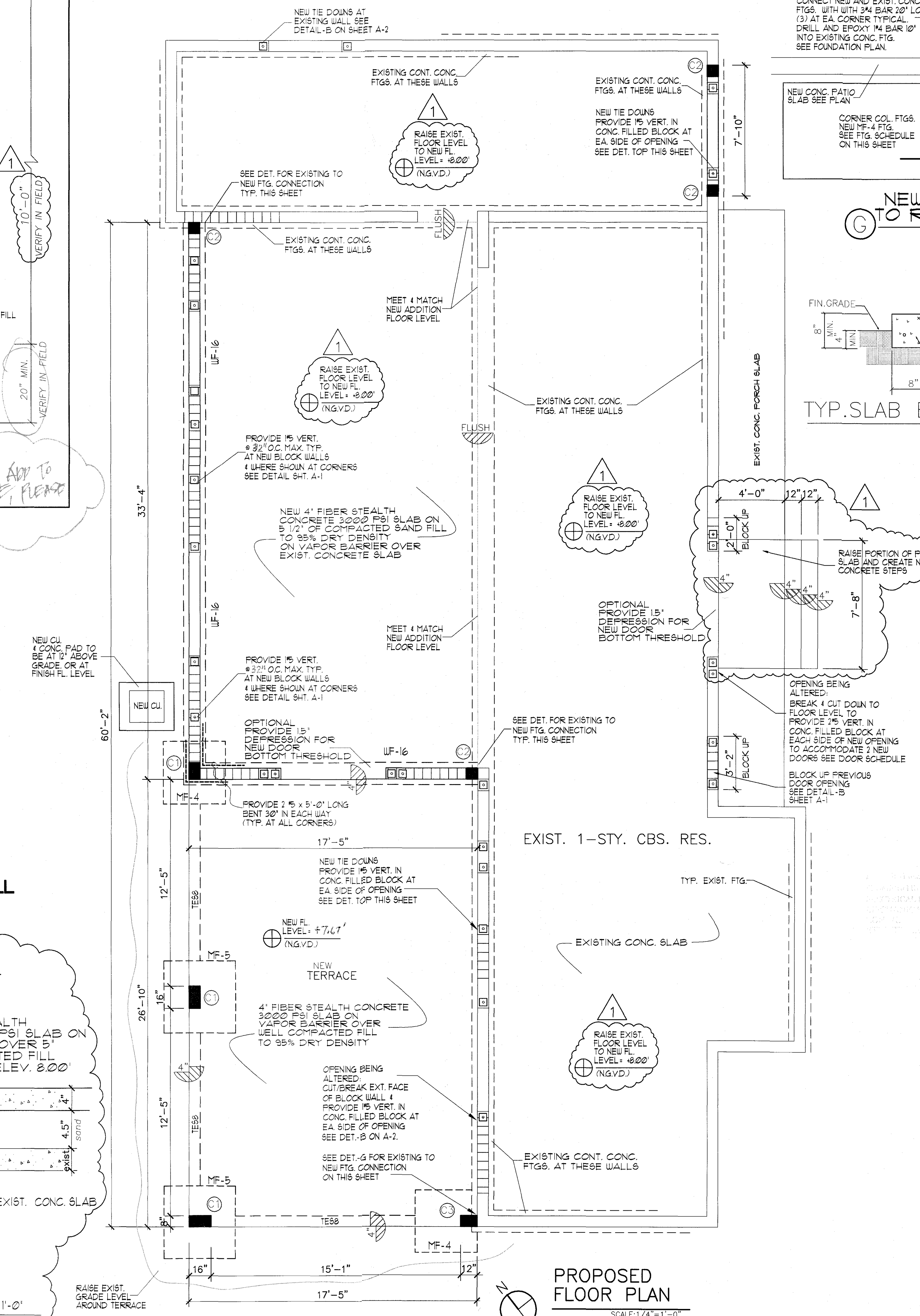

PROPOSED FLOOR PLAN
SCALE:1/4"=1'-0"

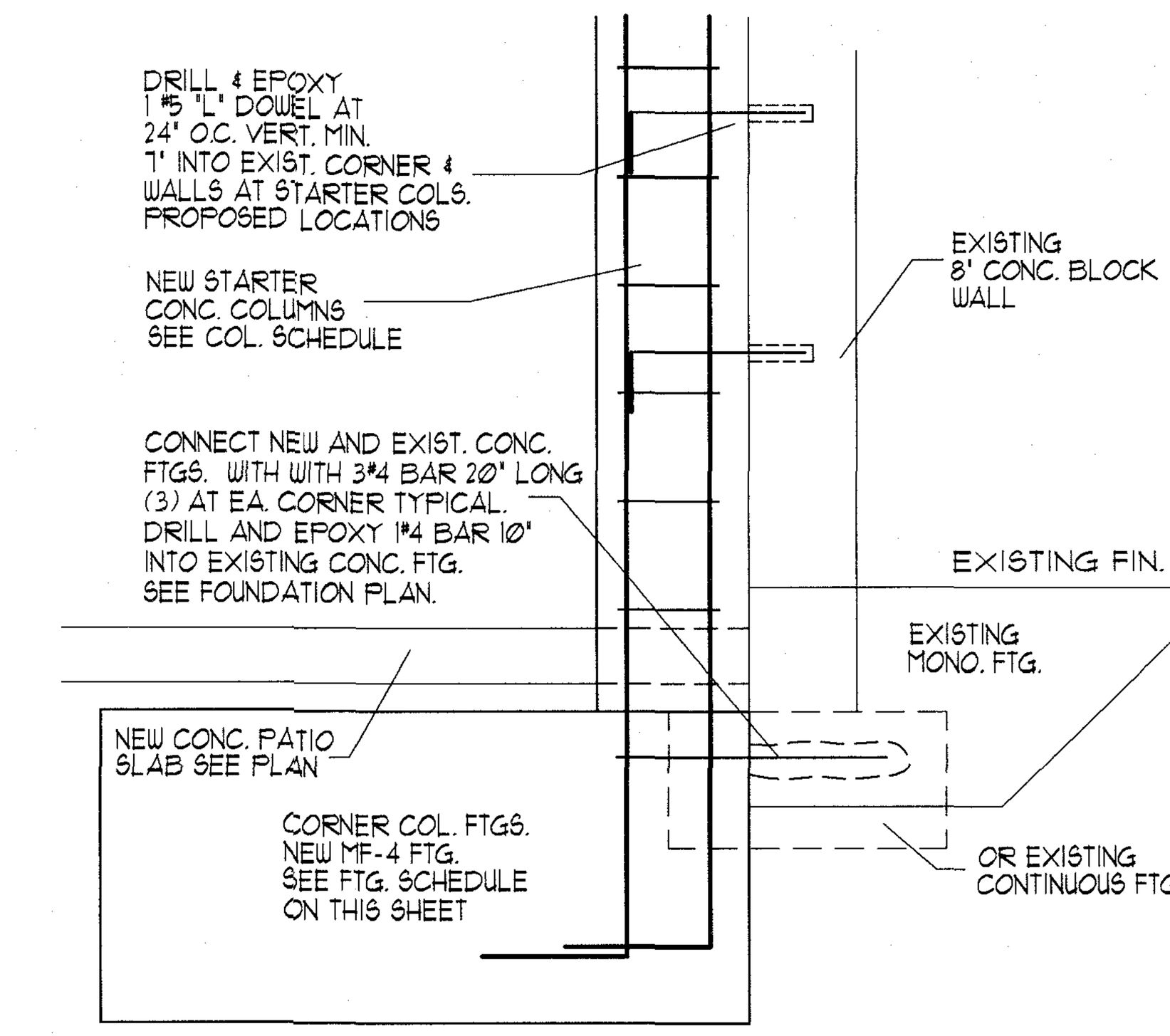

G NEW COL. FTG. NEXT TO RES. WALL DETAIL
SCALE : 3/4" = 1'-0"

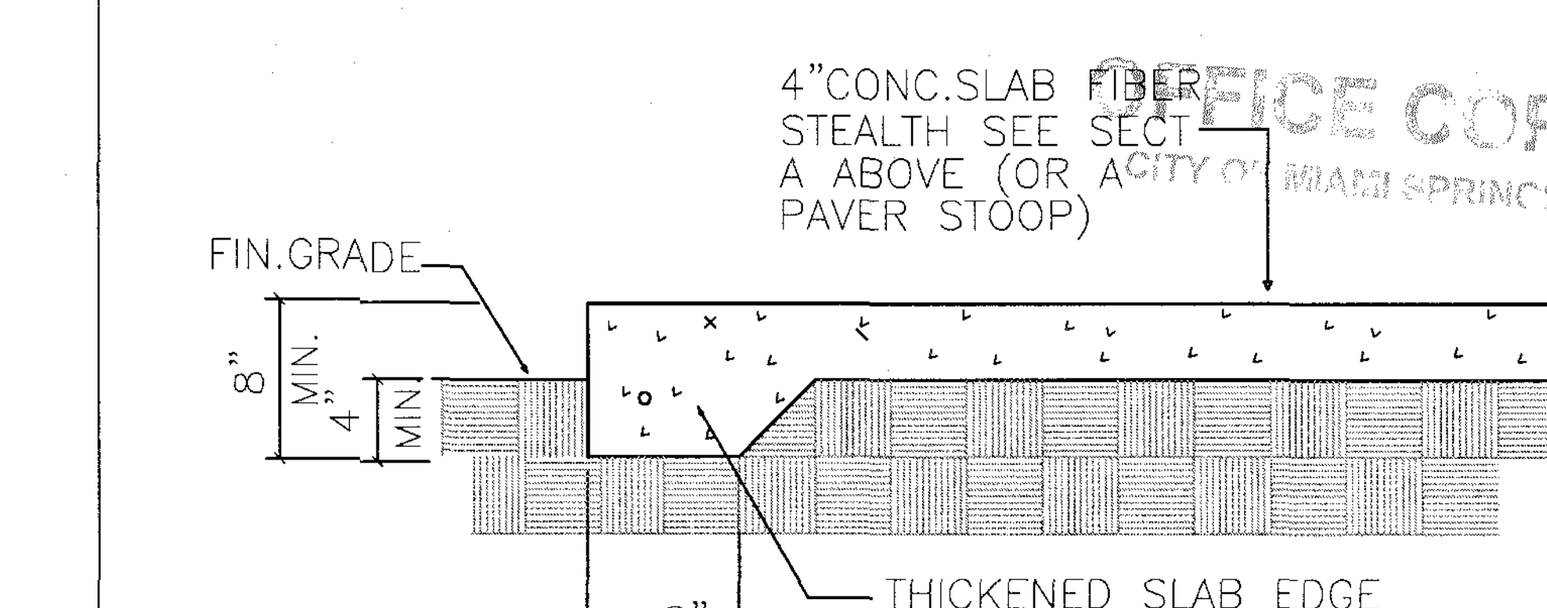

TYP.SLAB END DETAIL (TES8)
SCALE:3/4"= 1'-0"

OFFICE COPY CITY OF MIAMI SPRINGS

CITY OF MIAMI SPRINGS
BUILDING DEPARTMENT
FEB 04 2022
RECEIVED

REWORK

CITY OF MIAMI SPRINGS
APPROVED
FOR PERMIT ONLY

NO.	DATE	
1	1-14-22	REVISED TO RAISE EXIST. FL. LEVEL TO 8.0
2	.	
3	.	
4	.	

DESG . DRWN . CHKD . APRV . DATE .

PROJECT NAME: ADDITION TO RESIDENCE FOR:
OWNER/PH: AMBAR PREVAL 786-587-7391
ADDRESS:200 N. ESPLANADE DRIVE MIAMI SPRINGS, FLORIDA 33166
PROJECT ADD: SAME

Guillermo Ramon Gonzalez
9000 SW. 168th Avenue Miami Florida 33196 Ph:305-484-8171 Ph:786-237-5154 (assistant)
Registered Architect #13960

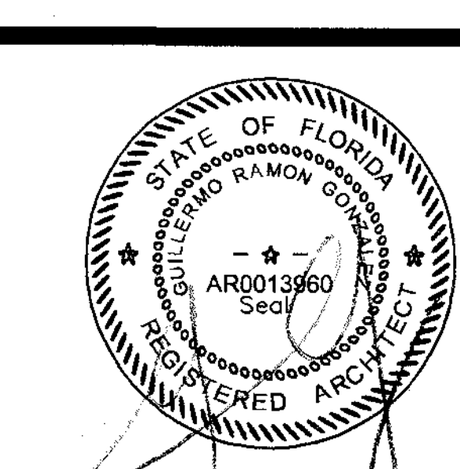

Guillermo Ramon Gonzalez
R.A. 13960
STATE OF FLORIDA

101521

A-2

GENERAL NOTES:

1. CONCRETE SHALL HAVE 3,000 PSI COMPRESSIVE STRENGTH AT 28 DAYS, UNLESS OTHERWISE NOTED (U.O.N.)
2. ALL REINFORCING STEEL SHALL BE DEFORMED BARS, AND SHALL HAVE A MINIMUM YIELD STRENGTH OF 60,000 PSI GRADE 60, AND MEET ASTM A-615 SPECS.
3. ALL STRUCTURAL STEEL SHALL HAVE A MINIMUM YIELD STRENGTH OF 36,000 PSI, AND MEET ASTM A-36 SPECS.
4. DROP TIE BEAM OVER DOORS EXTEND 8" PAST OPENING ON BOTH SIDES AND ADD 2-#5 BARS FOR EVERY ADDITIONAL 8" OF BEAM HEIGHT (2 ADDITIONAL BARS MIN.)

FOUNDATIONS

SOIL STATEMENT:

1. THE SOIL AT THIS SITE HAS BEEN OBSERVED BY THE ARCHITECT OR ENGINEER TO BE COMPOSED OF SAND AND ROCKS AND CAN BE CONSIDERED TO HAVE AN ALLOWABLE MINIMUM DESIGN BEARING CAPACITY OF 2,000 P.S.F. (SHOULD ANY OTHER CONDITIONS OR MATERIALS BE ENCOUNTERED IN THE PROCESS OF CONSTRUCTION THE ARCHITECT OR ENGINEER SHALL BE NOTIFIED BEFORE PROCEEDING WITH THE WORK).

   ALL BUILDINGS SHALL HAVE PRE-CONSTRUCTION TREATMENT PROTECTION AGAINST SUBTERRANEAN TERMITES AS PER F.B.C. 2020 7th EDITION. A CERTIFICATE OF COMPLIANCE SHALL BE ISSUED TO THE BUILDING DEPARTMENT BY THE LICENSED PEST CONTROL COMPANY THAT CONTAINS THE FOLLOWING STATEMENTS : " THE BUILDING HAS RECEIVED A COMPLETE TREATMENT FOR THE PREVENTION OF SUBTERRANEAN TERMITES. TREATMENT IS IN ACCORDANCE WITH THE RULES AND LAWS ESTABLISHED BY THE FLORIDA DEPARTMENT OF AGRICULTURE AND CONSUMER SERVICES ".
2. AT THE TIME OF CONSTRUCTION THE ARCHITECT OR ENGINEER SHALL SUBMIT TO THE BUILDING OFFICIAL A LETTER ATTESTING THAT THE SITE HAS BEEN OBSERVED AND THAT THE FOUNDATION CONDITIONS ARE SIMILAR TO THOSE UPON WHICH THE DESIGN IS BASED.
3. SOIL AT THE BUILDING AREA SHALL BE VIBRE-ROLLED TO A MIN. COMP ACTION OF 2,000 P.S.F. AND MODIFIED PROCTOR DENSITY.

4. CENTERLINE OF FOOTING IS CENTERLINE OF COLUMNS AND BEARING WALLS, UNLESS OTHER WISE NOTED (U.O.N.).
5. ELEVATION OF TOP OF FOOTING SHALL BE 1'- 0" BELOW THE FINISHED GRADE, U.O.N.
6. PROVIDE BEND DOWELS AT ALL COLUMNS AND VERTICAL REINFORCEMENT SAME SIZE AND QUANTITY AS REINFORCEMENT.

REINFORCING

1. MINIMUM CLEAR COVER FOR REBARS TO BE AS FOLLOWS:
   COLUMNS = 1-1/2" TO TIE FOOTINGS = 3" BEAMS = 1-1/2" TO TIE
   PEDESTAL = 2" TO TIE SLAB ON FILL = 2" FROM TOP SLABS = 3/4"
2. ALL REINFORCING SHALL BE HELD SECURELY IN POSITION WITH STANDARD ACCESSORIES
3. SPLICES IN CONTINUOS TOP REBARS SHALL BE MADE AT MID SPAN, SPLICES IN CONTINUOS BOTTOM REBARS SHALL BE OVER SUPPORT(S).
4. SPLICES IN REINFORCING, WHERE PERMITTED, SHALL BE AS FOLLOWS:
   COLUMN VERT.BARS = 30 BAR DIA. TEMPERATURE REBARS = 12" MIN.
   FOOTING DOWELS = 30 BAR DIA. + 8" WELDED WIRE MESH = 6"
   TENSION SPLICE = CLASS "C" ALL OTHERS = 30 BAR DIA.

3 5 2 9 , ' (1 / 2 1 * % (1 ' % $ 5 6 $ 7 & 2 5 1 6 2) % ($ 0

SLAB

4" FIBER STEALTH CONCRETE SLAB 3000 PSI

1. ~~SLAB SHALL BE 2500 PSI CONCRETE (MIN.), 4" THICK, REINFORCED WITH 6"X 6" - 10/10 (GAUGE) WELDED WIRE MESH (W.W.M.),~~ ON WELL COMPACTED FILL.
2. FILL MATERIAL SHALL BE CLEAN SAND AND ROCK COMPACTED TO 95% OF MAXIMUM DENSITY IN LIFTS NOT TO EXCEED 12" IN DEPTH.
3. PLACE CONCRETE SLABS IN A CHECKERBOARD PATTERN, NO PANEL EXCEEDING 25 FEET OF LENGTH, OR 625 SF IN AREA, OR USE CONTROL JOINTS.
4. ELEVATION TOP OF CONCRETE SLAB SHOWN THUSLY; OR MATCH EXISTING ADJACENT FLOOR ELEVATION.
5. WALLS, COLUMNS, AND BEAMS, PENETRATING SLAB ON FILL, SHALL BE ISOLATED BY 1/2" PRE MOLDED JOINT FILLER, UNLESS OTHERWISE NOTED (U.O.N.).
6. SLABS SHALL BE PLACED OVER 1 LAYER OF PLASTIC MEMBRANE, SUCH AS 6 MIL VISQUEEN, OR SIMILAR.
7. SLABS ON FILL SHALL BE CURED CONTINUOUSLY FOR 5 DAYS.

MASONRY

1. CONCRETE MASONRY UNITS (CMU), OR "BLOCKS", SHALL CONFORM TO ASTM C-90 SPECS.
2. COMPRESSIVE STRENGTH OF MASONRY UNITS SHALL BE NOT LESS THAN FM=1500 PSI.
3. ALL BLOCK WALLS SHALL BE LAID IN A FULL BEDDING OF MORTAR, WITH A COMPLETE COVERAGE OF THE BLOCK'S FACE SHELL (HORIZONTALLY) AND MORTAR GROOVES (VERTICALLY). AND REINFORCED WITH #8 TRUSS TYPE JOINT REINFORCEMENT @ EVERY OTHER COURSE (16"O.C. VERTICALLY)
4. MORTAR TO BOND BLOCK MASONRY SHALL BE TYPE "M", 2,500 PSI.
5. THE FIRST BLOCK CELL ADJACENT TO ANY OPENING SHALL BE FILLED WITH CONCRETE.
6. THE FIRST BLOCK CELL ADJACENT TO ANY OPENING FROM 3'TO 8'SHALL BE REINFORCED WITH 1- #5 VERTICAL AND BE FILLED WITH 2500 PSI CONCRETE.

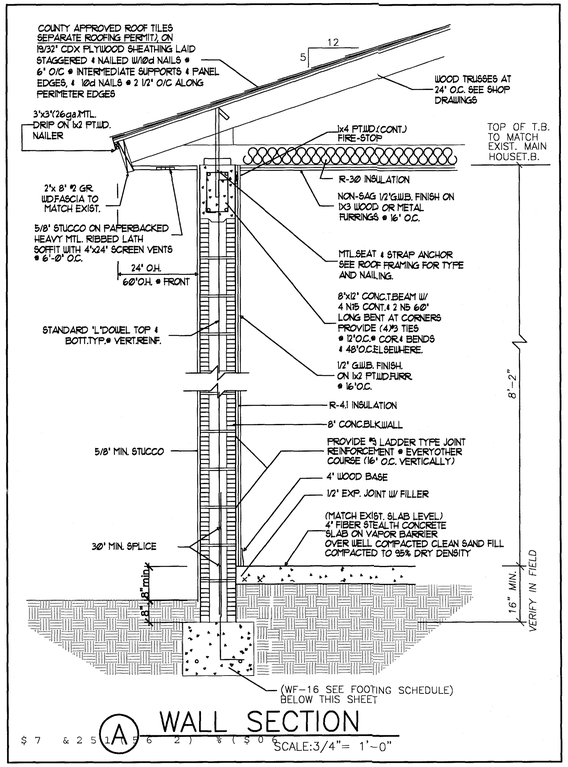

Ⓐ WALL SECTION

SCALE:3/4"= 1'-0"

FOOTING/COLUMN SCHEDULE								
MARK	SIZE	DEPTH	ELEV TOP FTG	BOTT. REINFORCING A	BOTT. REINFORCING B	TOP REINFORCING C	TOP REINFORCING D	REMARKS
WF-16	16"	16"	+0'-8"	2 #5 CONT.				
C1	8"x 16"	CONCRETE COLUMNS WITH 4#5 VERT. & #3 TIES AT 8" O.C. VERT.						
C2	8"x 8"	CONCRETE STARTER COLUMNS WITH 2#5 VERT.						
C3	8"x 12"	CONCRETE COLUMNS WITH 4#5 VERT. & #3 TIES AT 8" O.C. VERT.						
MF-4	48"x48"	20"	- 16"	5 #5	5#5	5#5	5#5	
MF-5	60"x60"	20"	- 12"	7 #5	7#5	7#5	7#5	

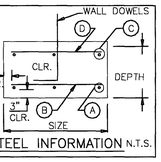

STEEL INFORMATION N.T.S.

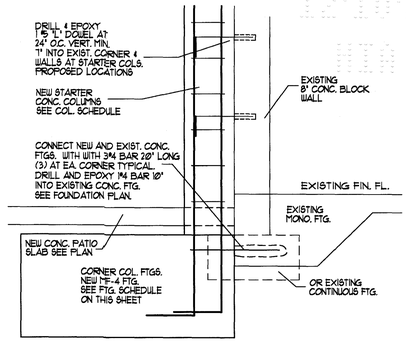

Ⓖ NEW COL. FTG. NEXT TO RES. WALL DETAIL

SCALE : 3/4" = 1'-0"

PROPOSED FLOOR PLAN

SCALE:1/4"=1'-0"

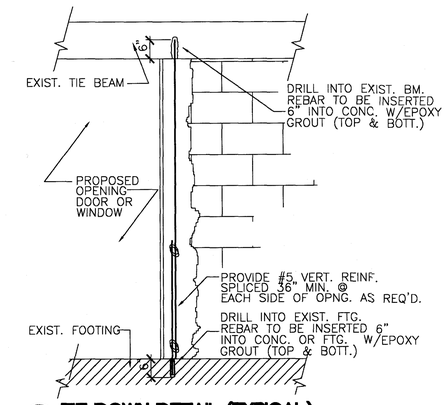

Ⓑ TIE DOWN DETAIL (TYPICAL) AT EXISTING WALL

SCALE: 3/4" = 1'-0"

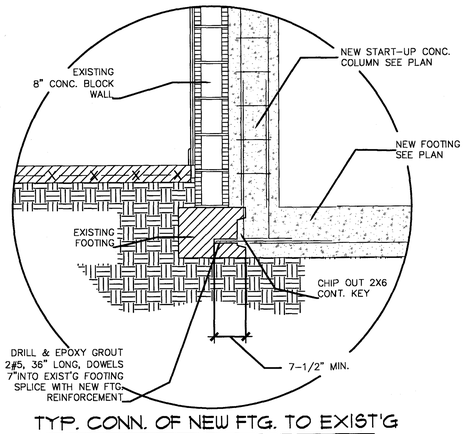

TYP. CONN. OF NEW FTG. TO EXIST'G

SCALE : 3/4" = 1'-0"

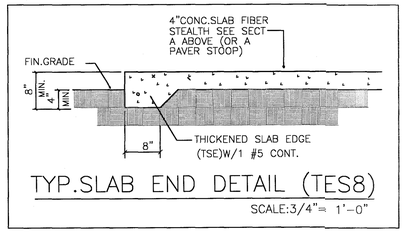

TYP.SLAB END DETAIL (TES8)

SCALE:3/4"= 1'-0"

CITY OF MIAMI SPRINGS APPROVED FOR PERMIT ONLY
BUILDING INSPECTOR
ELECTRICAL INSPECTOR
PLUMBING INSPECTOR

STATE OF FLORIDA — GUILLERMO RAMON GONZALEZ — AR0013960 — REGISTERED ARCHITECT

Guillermo Ramon Gonzalez
R.A. 13960
STATE OF FLORIDA

NO.	DATE

DESG. DRWN. CHKD. APPV. DATE

PROJECT NAME: ADDITION TO RESIDENCE FOR:
OWNER/PH: AMBAR PREVAL 786-587-7391
ADDRESS:200 N. ESPLANADE DRIVE MIAMI SPRINGS, FLORIDA 33166
PROJECT ADD: SAME

Guillermo Ramon Gonzalez
9000 SW. 168th Avenue Miami Florida 33196 Ph:305-484-8171 Ph:786-237-5154 (assistant)
Registered Architect #13960

101521

A-2

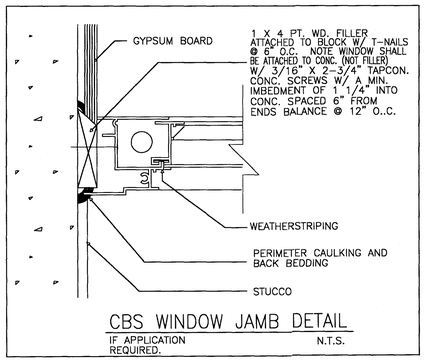

CBS WINDOW JAMB DETAIL

IF APPLICATION REQUIRED. N.T.S.

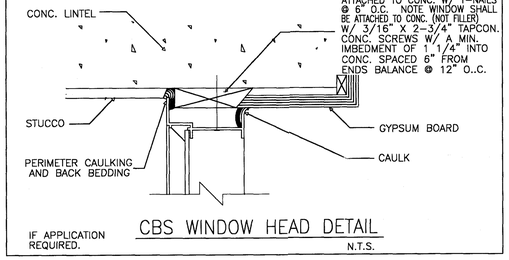

CBS WINDOW HEAD DETAIL

IF APPLICATION REQUIRED. N.T.S.

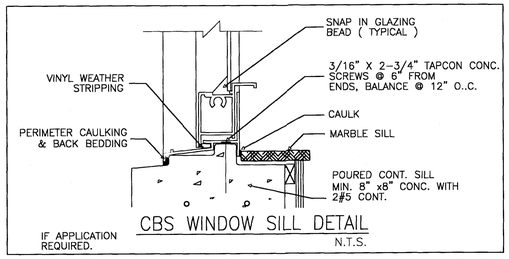

CBS WINDOW SILL DETAIL

IF APPLICATION REQUIRED. N.T.S.

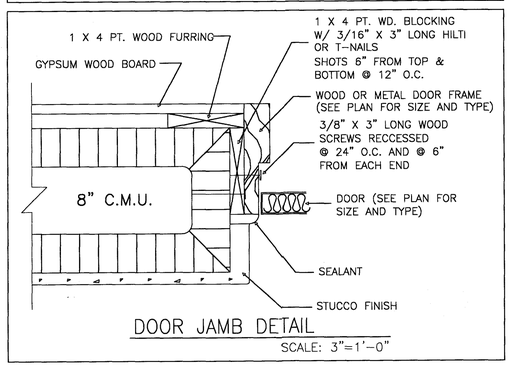

DOOR JAMB DETAIL

SCALE: 3"=1'-0"

FRAMING NOTES:

1. ALL FRAMING SHALL BE DONE IN ACCORDANCE WITH THE LATEST EDITION OF THE "F.B.C." 2020 7th EDITION AND ALL OTHER PERTAINING CODES AND ORDINANCES HAVING JURISDICTION.
2. ALL PLYWOOD USED STRUCTURALLY BE IDENTIFIED FOR GRADE AND GLUE TYPES BY THE TRADEMARKS OF AN APPROVED TESTING AND GRADING AGENCY.
3. ALL PLYWOOD PERMANENTLY EXPOSED IN OUTDOOR LOCATIONS SHALL BE OF EXTERIOR TYPE.
4. ALL LUMBER TWO INCHES OR LESS IN THICKNESS SHALL CONTAIN NOT MORE THAN 19% MOISTURE AT THE TIME OF PERMANENT INCORPORATION IN A BUILDING OR STRUCTURE AND/OR AT THE TIME OF TREATMENT WITH A WOOD PRESERVATIVE.
5. ALL LUMBER SIZES TO HEREIN NOMINAL.
6. LUMBER USED FOR JOISTS AND/OR OTHER STRUCTURAL. MEMBERS SHALL BE OF NO LESS STRENGTH THAN #2 GRADE OF SOUTHERN PINE, DOUGLAS FIR LARCH, HEM FIR, OR SPRUCE PINE FIR.
7. LUMBER USED FOR STUDS IN EXTERIOR WALLS SHALL BE OF A STRESS GRADE NOT LESS THAN 625 PSI NOMINAL EXTREME FIBER STRESS IN BENDING (FB).
8. LUMBER USED FOR STUDS IN INTERIOR NON BEARING WALLS SHALL BE OF A STRESS GRADE NOT LESS THAN 225 PSI NOMINAL EXTREME FIBER STRESS IN BENDING (FB).
9. JOISTS AND RAFTERS SHALL HAVE NOT LESS THAN FOUR INCHES OF BEARING AS PROVIDED IN "F.B.C." 2020 7th EDITION.
10. NOTCHING AND BORING OF JOIST AND RAFTERS SHALL COMPLY WITH THE "F.B.C." 2020 7th EDITION.
11. ENDS OF WOOD JOISTS ENTERING OR BEARING ON MASONRY AND IN CONTACT THEREWITH SHALL BE PRESSURE TREATED, OR OF AN APPROVED DURABLE SPECIES.
12. WHERE MASONRY EXTENDS ABOVE SUCH WOOD MEMBERS SHALL BE FIRE SO THE TOP EDGE DOES NOT ENTER THE MASONRY MORE THAN ONE INCH OR SHALL BE PROVIDED WITH WALL PLATE BOXES OF SELF TYPE OR APPROVED HANGERS.
13. FLOOR JOISTS UNDER ALL WALLS OR PARTITIONS PARALLEL TO THE JOISTS SHALL BE DOUBLED. DOUBLED JOISTS MAY BE SEPARATED NOT MORE THAN SIX INCHES.
14. FLOOR JOISTS SUPPORTING CONCRETE FOR BATHROOM FLOORS SHALL HAVE A MAXIMUM SPACING OF 12 INCHES.
15. CEILING JOISTS SPANNING MORE THAN 14 FEET SHALL BE LATERALLY SUPPORTED AT MID-SPAN. F.B.C. 2020 7th EDITION.
16. PRE FABRICATED ROOF TRUSSES SHALL BE DESIGNED BY AN ENGINEER REGISTERED IN THE STATE OF FLORIDA; AND SHALL COMPLY WITH ALL THE REQUIREMENTS OF THE "F.B.C." 2020 7th EDITION.
17. FIRE STOPPING SHALL BE PROVIDED TO CUT OFF ALL CONCEALED DRAFT SPACES BOTH VERTICAL AND HORIZONTAL.
18. ANCHORS SECURING WOOD TO CONCRETE SHALL BE NOT LESS THAN 1"X1/8" STEEL STRAP EMBEDDED IN THE CONCRETE AND NAILED WITH THREE 16D NAILS TO WOOD MEMBERS AS SET FORTH IN OF THE "F.B.C.". 2020 7TH EDITION.
19. ANCHORS SECURING WOOD TO WOOD SHALL BE NOT LESS THAN 1"X1/8" STEEL STRAP NAILED TO EACH MEMBER WITH THREE 16D NAILS, OR SHALL BE A COMMERCIAL ANCHOR APPROVED BY THE BUILDING OFFICIAL ANCHORING EACH MEMBER.
20. ALL ANCHORS AND RELATIVE NAILS EXPOSED TO THE WEATHER SHALL BE GALVANIZED.
21. WHERE THE INTERIOR OF MASONRY WALLS ARE FURRED FURRING SHALL BE TREATED AND FIRE STOPPED AS HEREIN REQUIRED AND SHALL BE SECURELY FASTENED TO THE MASONRY WITH NOT LESS THAN ONE CUT NAIL IN ALTERNATE COURSE OF BLOCK.
22. THE ALLOWABLE LOADS ON ALL TYPES OF CONNECTORS SHALL BE AS SET FORTH IN THE STANDARDS LISTED IN OF THE "F.B.C." 2020 7TH EDITION.
23. IN GENERAL NAILS SHALL PENETRATE THE SECOND MEMBER A DISTANCE EQUAL TO THE THICKNESS OF THE MEMBER BEING NAILED THERETO. THERE SHALL BE NOT LESS THAN TWO NAILS IN ANY CONNECTION.

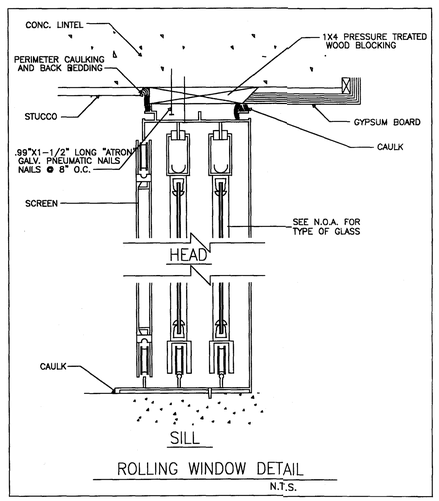

ROLLING WINDOW DETAIL

N.T.S.

NOTE: OWNER/G.C. TO VERIFY ALL NEW/EXIST. WINDOW/DOOR OPENING DIMENSIONS WITH WINDOW OR DOOR MANUF. TO AVOID DISCREPANCIES PRIOR TO BUYING OF ANY MATERIALS AND OR CREATING BLOCK OPENINGS. NEW WINDOWS MAY SLIGHTLY VARY IN SIZE

MIAMI-DADE COUNTY

Department of Regulatory and Economic Resources
Board Administration Section
11805 S.W. 26 Street (Coral Way) Rm. 230
Miami, Florida 33175
Tel (786) 315-2573 Fax (786) 315-2570
www.miamidade.gov/development

MEMO

TO: **All Building Officials in Miami-Dade County**

FROM: **Secretary of the Board** for **Board of Rules and Appeals (BORA)**

DATE: **January 22nd, 2021**

SUBJECT: **BORA Interpretation**
Wind Load Table for Openings in Walls -
One- and Two-Family Detached and Multiple Single-Family Dwellings with Mean Roof Height of 30 Feet or Less

At their meeting of January 21, 2021, the Board of Rules and Appeals (BORA) considered an interpretation of the Code to provide guidance on wind pressures to be used in the replacement of windows, doors and overhead sectional (garage) doors, to include French doors, solid doors, and sliding glass doors, in one- and two-family detached dwellings and multiple single-family dwellings (townhouses) with a mean roof height of 30 feet or less.

The interpretation was sought in order to make such replacements easier for homeowners and contractors to meet the minimum requirements of the Code.

Upon discussion, the Board agreed and interpreted that "***The attached Miami-Dade County Wind Load Chart for Openings meets the minimum requirements of the Code and can be used throughout Miami-Dade County.***" The values contained in the attached reference document were determined to be in accordance with ASCE 7-16 Chapter 30 and 2020 FBC sections 1620.2 and 1620.3. (175 mph (3-second gust) /Exposure C).

If you have any additional questions on this matter, please contact Jeanne (Lundy) Clarke, Senior Code Officer at (786) 315- 2057 or via email at Jeanne.Clarke@miamidade.gov.

Miami-Dade County Wind Load Chart for Openings

Based on ASCE 7-16 for Detached One- and Two-Family Dwellings and Multiple Single-Family Dwellings (Townhouses) with a mean roof height <- 30 feet
175 mph (3-second gust) /Exposure C/ K_d=.85, / Pressures in PSF / ASD

These tables are to be used only for one- and two-family detached dwellings and multiple single-family dwellings (townhouses) with a mean roof height of 30 feet or less. They are to be used for replacement windows. These tables can be used for French doors, sliding glass doors, solid doors, and for sectional (overhead) garage doors. They may not be used for roll-up doors due to catenary forces acting on the supports that must be checked.

The pressures are provided in pounds per square foot (psf) for allowable stress design (ASD). A positive (+) pressure acts towards the structure; negative pressure (-) acts away from the structure (suction).

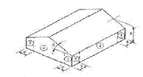

The width of zone 5 is the 'a' distance; it is either 10% of the least horizontal dimension of the structure - or - 0.4 times the mean roof height, but not less than 4% of the least horizontal distance -or- 3 feet. It is measured from the corner of the structure. Note that 3-feet is not the default value, it is the minimum width.

To determine the least horizontal dimension, inscribe a box around the entire structure and use the smallest dimension of the resulting rectangle.

Windows

The effective wind area of a window is based on the size of a single pane of glass. Likewise, a sliding glass door or French door would use the size of one of the leaves, not the size of the opening.

Garage Doors

The wind area of a sectional door is based on the size of a single panel, usually no more than 24" deep, and the width of the door.

Dual Pressure Zones

A common placement for a garage door is near a corner of a residence, which would put a portion of the door in zone 5, leaving the remainder in zone 4. You can select the door based on the zone 5 pressure, or you may use a weighted average. For example, if you have a 10-ft wide door and 2-ft are in zone 5, the zone 5 suction is -50 and the zone 4 suction is -42: ((2 x 50) + (10-2) x 42))/ 10 = (100 + 336)/10 = 436/10 = -43.6 psf. (Round up to -44 psf)

If a window is placed in zone 4 and zone 5, use the zone 5 pressure.

A_{eff} (ft^2)	15 ft Mean Roof Height				20 ft Mean Roof Height				25 ft Mean Roof height				30 ft Mean Roof Height			
	Zone 4		Zone 5		Zone 4		Zone 5		Zone 4		Zone 5		Zone 4		Zone 5	
	+		+	-	+	-	+	-	+	-	+	-	+	-	+	-
10	45	45	40	54	43	46	43	57	45	48	45	60	46	50	46	62
20	45	45	38	50	41	44	41	53	43	46	43	56	44	48	44	58
50	45	45	36	45	38	42	38	48	40	44	40	50	42	45	42	52
100	45	45	34	42	36	40	36	44	38	42	38	46	39	43	39	48
500	30	33	30	33	32	35	32	35	33	37	33	37	35	38	35	38

Wind analysis per MecaWind Pro V2335

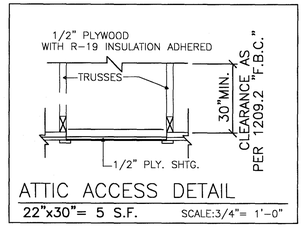

ATTIC ACCESS DETAIL

22"x30"= 5 S.F. SCALE:3/4"= 1'-0"

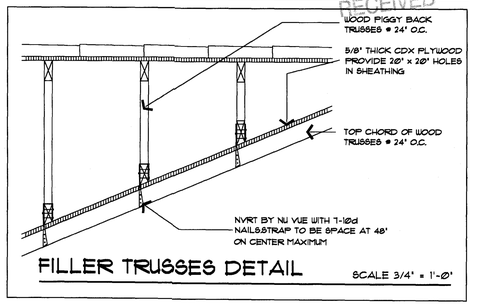

FILLER TRUSSES DETAIL SCALE 3/4" = 1'-0"

I CERTIFY THIS IS BEING DESIGNED TO WITHSTAND 175 MPH WIND SPEED ACCORDING TO ASCE 7-16 AS REQUIRED BY THE FLORIDA BUILDING CODE REVISED 2020 EDITION 7th EDITION

SCHEDULE

MARK	DESCRIPTION
1	ANGLE 3" x 3" x 1/4" W/ EXTENDED LEG (Fy=36KSI) SEE DWG.
2	STEEL PLATE 9 3/4" x 4" x 3/8" (Fy=36 KSI)
3	STEEL PLATE 11 1/4" x 4" x 3/8" (Fy=36 KSI)
4	ONE(1), 5/8" DIAM. x 6" THRU BOLT FOR TWO PLY TRUSS ONE(1), 3/4" DIAM. x 7" THRU BOLT FOR THREE PLY TRUSS
5	(4), 3/4" DIAM.HILTI KWIK BOLT II 4 REQ'D.
6	PREFABRICATED TWO OR THREE PLY TRUSS
7	MIN. 8" x 12" CONCRETE TIE BEAM (F =3,000 PSI, MINIMUM)
8	CONCRETE MASONRY BLOCK

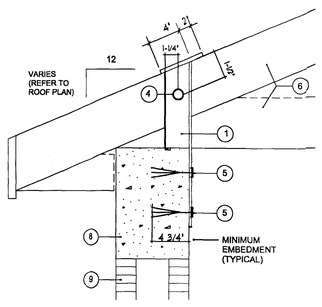

SECTION

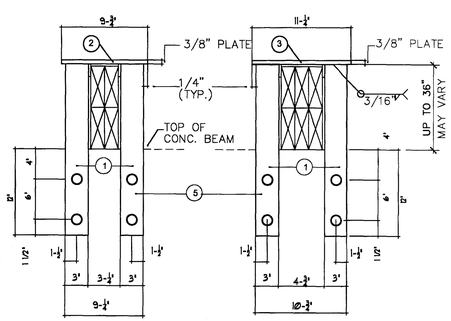

USE THIS BRACKET → TWO PLY TRUSS (MAX UPLIFT = 8,475#) THREE PLY TRUSS (MAX UPLIFT = 8,908#)

SPECIAL BRACKET DETAIL

RECEIVED
CITY OF MIAMI SPRINGS
BUILDING DEPARTMENT
MAY 05 2022

OFFICE COPY
CITY OF MIAMI SPRINGS

REWORK

CITY OF MIAMI SPRINGS
APPROVED
FOR PERMITS

PROJECT NAME: ADDITION TO RESIDENCE FOR:
OWNER/PH: AMBAR PREVAL 786-587-7391
ADDRESS:200 N. ESPLANADE DRIVE MIAMI SPRINGS, FLORIDA 33166
PROJECT ADD: SAME

NO. | DATE

DESG | DRWN | CHKD | APPV | DATE

Guillermo Ramon Gonzalez
9000 SW. 168th Avenue Miami Florida 33196 Ph:305-484-8171
Registered Architect #13960 Ph:786-237-5154 (assistant)

Guillermo Ramon Gonzalez
R.A. 13960
STATE OF FLORIDA

101521

A-3

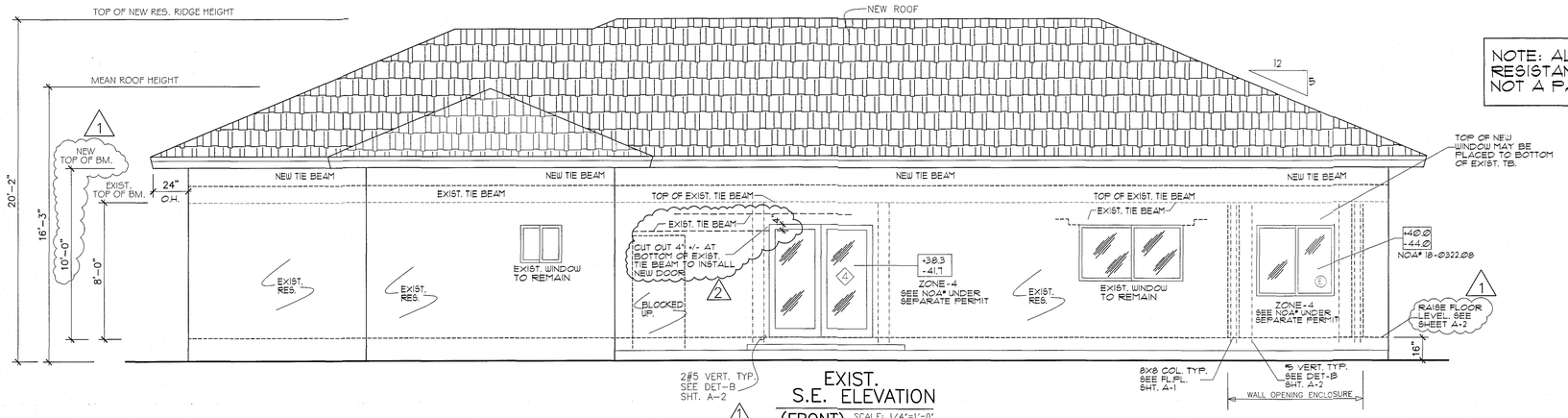

EXIST. S.E. ELEVATION (FRONT)

SCALE: 1/4"=1'-0"

NOTE: ALL NEW WINDOWS & EXTERIOR DOORS TO BE IMPACT RESISTANT SEE NOAS. ALSO TO BE UNDER A SEPARATE SUB PERMIT. NOT A PART OF THIS PERMIT.

NOTE: ALL EXTERIOR WALL COVERING AND ROOF ASSEMBLIES AND ROOF TOP STRUCTURES SHALL COMPLY WITH HI-VELOCITY HURRICANE ZONE AS PER CHAPTER 44 , R4401.1 & R4402.1 OF THE F.B.C. RESIDENTIAL 2020 - 7TH EDITION.

NOTE:
ALL WINDOWS, DOORS AND/OR ANY OTHER COMPONENTS INSTALLATION SHALL BE IN ACCORDANCE W/ MANUFACTURER'S SPECIFICATIONS SET FORTH IN THE APPROVED PRODUCT CONTROL APPROVAL.

NOTE: OWNER/G.C. TO VERIFY ALL NEW & WINDOWS/DOOR SIZES TO BE REMOVED/REPLACED

WINDOW SCHEDULE

NOTE: ALL WINDOW SIZES TO BE VERYFIED IN FIELD & WITH WINDOW MANUFG. PRIOR TO COMPONENT FABRICATION & INSTALLATION.

MARK	OPENING WIDTH	OPENING HEIGTH	CODE	TYPE	AREA (SF)	MATERIAL	REMARKS ALL NEW WINDOWS TO BE IMPACT RESISTANT
(A)	37	38 3/8"	3030	HORZ. ROLLER	9.60	ALUM./GLASS	SEE N.O.A. SEPARATE PERMIT
(B)	37	26	3020	HORZ. ROLLER	6.20	ALUM./GLASS	SEE N.O.A. TEMP. CAT-2 FROSTED
(C)	74-1/8	50 5/8	6030	HORZ. ROLLER	20.20	ALUM./GLASS	SEE N.O.A. EGRESS
(D)	53 1/8	50 5/8	6040	HORZ. ROLLER	18.75	ALUM./GLASS	SEE N.O.A. EGRESS
(E)							

NOTE: ALL NEW WINDOWS & EXTERIOR DOOR TO BE IMPACT RESISTANT SEE NOAS.

WINDOW U VALUE 1.20
WINDOW shgc U VALUE 0.45

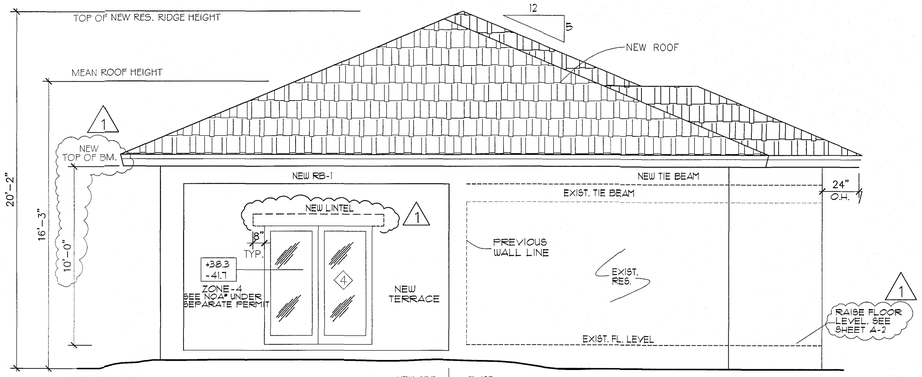

S.W. ELEVATION (SIDE)

SCALE: 1/4"=1'-0"

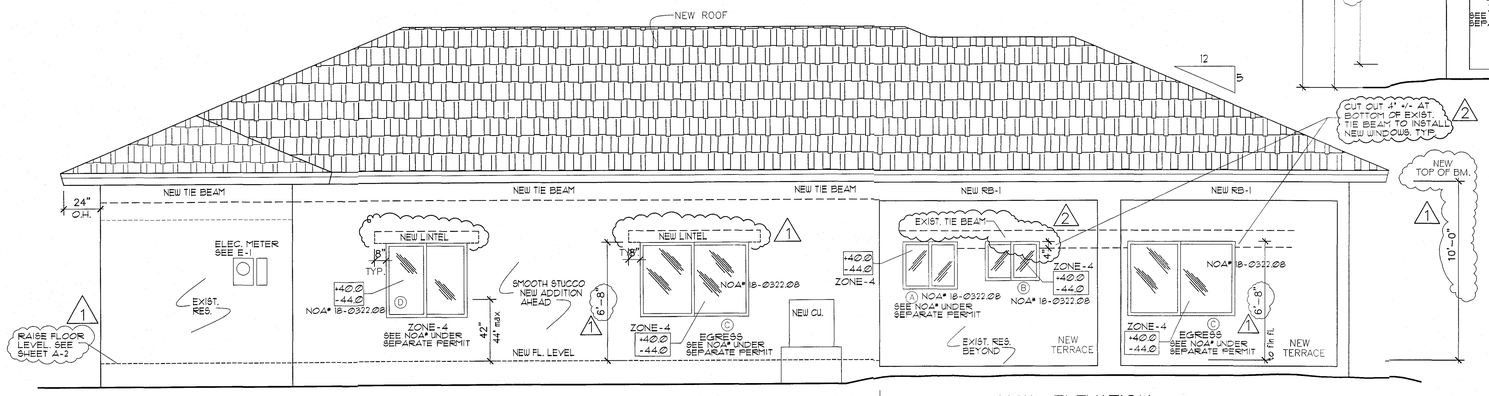

N.W. ELEVATION (REAR)

SCALE: 1/4"=1'-0"

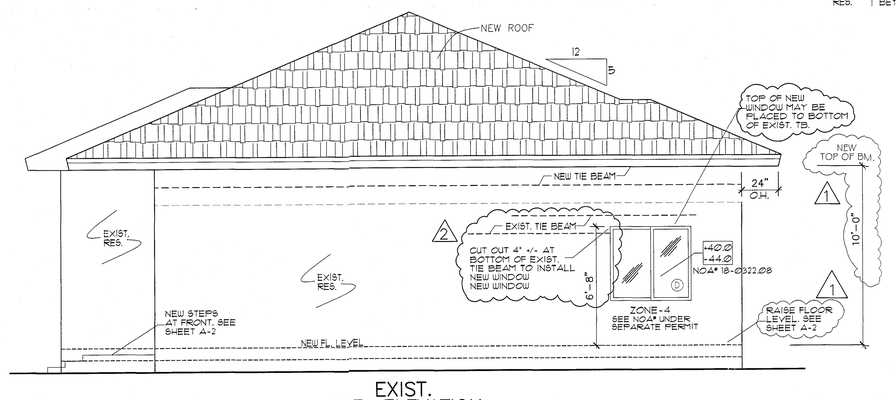

EXIST. N.E. ELEVATION (SIDE)

SCALE: 1/4"=1'-0"

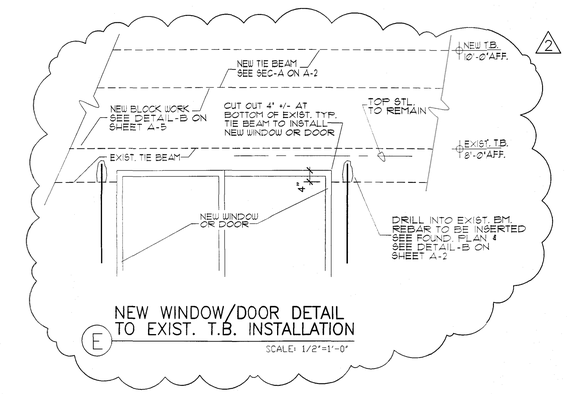

NEW WINDOW/DOOR DETAIL TO EXIST. T.B. INSTALLATION

SCALE: 1/2"=1'-0"

8" PRECAST U-LINTELS *STANDARD LENGTHS*

OVERALL LENGTH	TOP STEEL	BOTTOM STEEL
3'-0"	2 -7/32" wire	2 -#3 rebar
3'-4"	2 -7/32" wire	2 -#3 rebar
3'-6"	2 -7/32" wire	2 -#3 rebar
4'-0"	2 -7/32" wire	2 -#3 rebar
4'-6"	2 -7/32" wire	2 -#3 rebar
4'-8"	2 -7/32" wire	2 -#3 rebar
5'-4"	2 -7/32" wire	2 -#3 rebar
5'-10"	2 -7/32" wire	2 -#3 rebar
6'-0"	2 -7/32" wire	2 -#4 rebar
6'-6"	2 -7/32" wire	2 -#4 rebar
6'-8"	2 -7/32" wire	2 -#4 rebar
7'-4"	2 -7/32" wire	2 -#4 rebar
7'-6"	2 -7/32" wire	2 -#4 rebar
8'-0"	2 -#3 rebar	2 -#4 rebar
8'-8"	2 -#3 rebar	2 -#4 rebar
9'-4"	2 -#3 rebar	2 -#4 rebar
10'-0"	2 -#3 rebar	2 -#4 rebar
10'-6"	2 -#3 rebar	2 -#4 rebar
10'-8"	2 -#3 rebar	2 -#5 rebar
11'-4"	2 -#3 rebar	2 -#5 rebar
12'-0"	2 -#3 rebar	2 -#5 rebar
13'-4"	2 -#3 rebar	2 -#5 rebar
14'-0"	2 -#3 rebar	2 -#5 rebar

Additional lengths available by special order

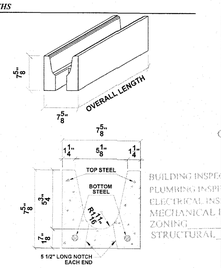

Rebar: ASTM A615 Grade 60
Wire: ASTM A510
Concrete Strength: 4000 psi
Average Self Weight: 33 plf
Finish: Grey Block

8" PRESTRESSED U-LINTELS *STANDARD LENGTHS*

OVERALL LENGTH	TOP STEEL	BOTTOM STEEL
14'-8"	NONE	2 -7/16 strand
15'-4"	NONE	2 -7/16 strand
17'-4"	NONE	2 -7/16 strand
19'-4"	2 -7/32" wire	2 -7/16 strand
21'-4"	2 -7/32" wire	2 -7/16 strand 2 - #4 rebar
22'-0"	2 -7/32" wire	2 -7/16 strand 2 - #4 rebar
24'-0"	2 -7/32" wire	2 -7/16 strand 2 - #4 rebar

Additional lengths available by special order

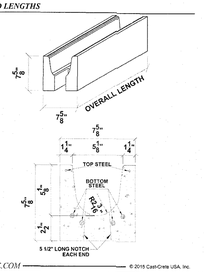

Rebar: ASTM A615 Grade 60
Wire: ASTM A510
Strand: ASTM A416 Grade 270
Concrete Strength: 6000 psi
Synthetic Fibers: 2.5 lbs/yd
Average Self Weight: 37 plf
Finish: Grey Smooth Form

WWW.CASTCRETE.COM
© 2015 Cast-Crete USA, Inc.

CITY OF MIAMI SPRINGS
BUILDING DEPARTMENT
APR 12 2022
RECEIVED

CITY OF MIAMI SPRINGS
APPROVED
FOR PERMIT ONLY

BUILDING INSPECTOR _____
PLUMBING INSPECTOR _____
ELECTRICAL INSPECTOR _____
MECHANICAL INSPECTOR _____
ZONING _____
STRUCTURAL _____

REWORK

NO.	DATE
1	1-14-22 REVISED TO RAISE EXIST. FL. LEVEL TO A/C
2	3-22-22 REVISED TO SHOW NEW DETAILS.

DESG | DRWN | CHKD | APRV | DATE

PROJECT NAME: ADDITION TO RESIDENCE FOR:
OWNER/PH: AMBAR PREVAL 786-587-7391
ADDRESS:200 N. ESPLANADE DRIVE MIAMI SPRINGS, FLORIDA 33166
PROJECT ADD: SAME

Guillermo Ramon Gonzalez
9000 SW. 168th Avenue Miami Florida 33196 Ph:305-484-8171
Registered Architect #13960 Ph:786-237-5154 (assistant)

STATE OF FLORIDA
GUILLERMO RAMON GONZALEZ
A0001396
CERTIFICATE
REGISTERED ARCHITECT
Guillermo Ramon Gonzalez
R.A. 13960
STATE OF FLORIDA

101521

A-4

NOTE: ALL NEW WINDOWS & EXTERIOR DOORS TO BE IMPACT RESISTANT SEE NOAS. ALSO TO BE UNDER A SEPARATE SUB PERMIT. NOT A PART OF THIS PERMIT.

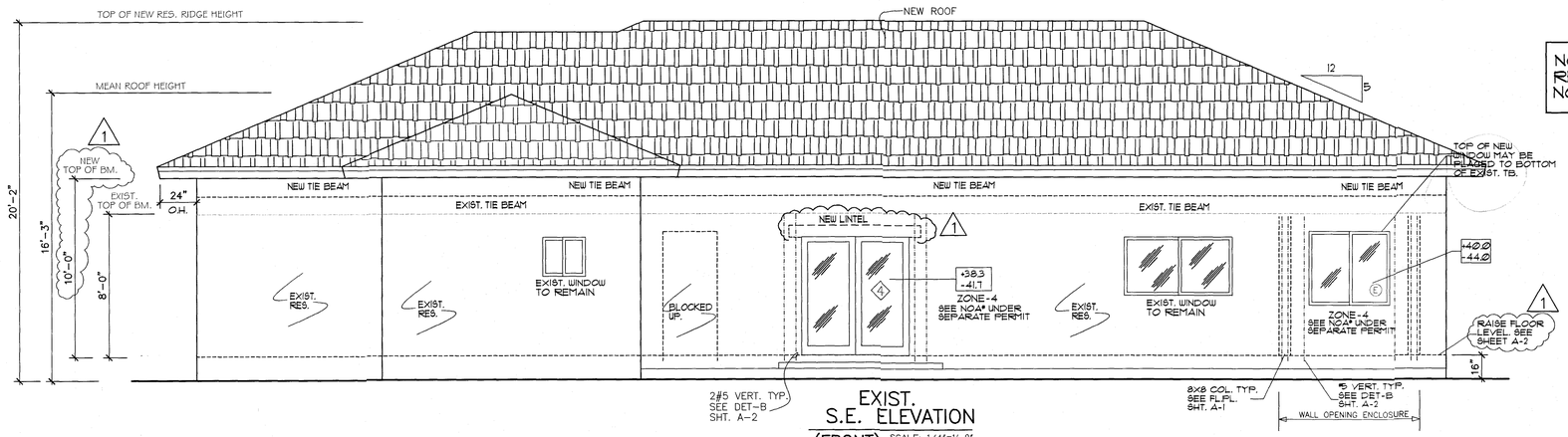

EXIST. S.E. ELEVATION (FRONT)
SCALE: 1/4"=1'-0"

NOTE: ALL EXTERIOR WALL COVERING AND ROOF ASSEMBLIES AND ROOF TOP STRUCTURES SHALL COMPLY WITH HI-VELOCITY HURRICANE ZONE AS PER CHAPTER 44 , R4401.1 & R4402.1 OF THE F.B.C. RESIDENTIAL 2020 - 7TH EDITION.

NOTE:
ALL WINDOWS, DOORS AND/OR ANY OTHER COMPONENTS INSTALLATION SHALL BE IN ACCORDANCE W/ MANUFACTURER'S SPECIFICATIONS SET FORTH IN THE APPROVED PRODUCT CONTROL APPROVAL.

WINDOW SCHEDULE

NOTE: OWNER/G.C. TO VERIFY ALL NEW & WINDOW/DOOR SIZES TO BE REMOVED/REPLACED

NOTE: ALL WINDOW SIZES TO BE VERYFIED IN FIELD & WITH WINDOW MANUFG. PRIOR TO COMPONENT FABRICATION & INSTALLATION.

MARK	OPENING WIDTH	OPENING HEIGTH	CODE	TYPE	AREA (SF)	MATERIAL	REMARKS ALL NEW WINDOWS TO BE IMPACT RESISTANT
(A)	37	38 3/8"	3030	HORZ. ROLLER	9.60	ALUM./GLASS	SEE N.O.A. SEPARATE PERMIT
(B)	37	26	3020	HORZ. ROLLER	6.20	ALUM./GLASS	SEE N.O.A. TEMP. CAT-2 FROSTED
(C)	74-1/8	38 3/8"	6030	HORZ. ROLLER	20.20	ALUM./GLASS	SEE N.O.A. EGRESS
(D)	53 1/8	50 5/8	6040	HORZ. ROLLER	18.75	ALUM./GLASS	SEE N.O.A. EGRESS
(E)							

NOTE: ALL NEW WINDOWS & EXTERIOR DOOR TO BE IMPACT RESISTANT SEE NOAS.

WINDOW U VALUE 1.20
WINDOW shgc U VALUE 0.45

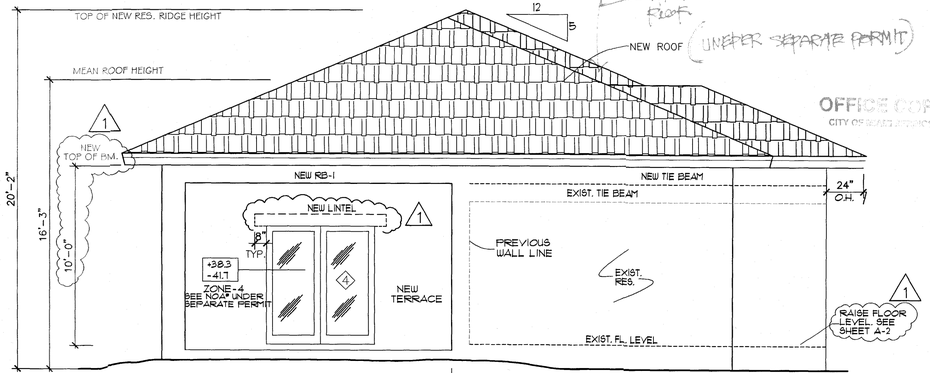

S.W. ELEVATION (SIDE)
SCALE: 1/4"=1'-0"

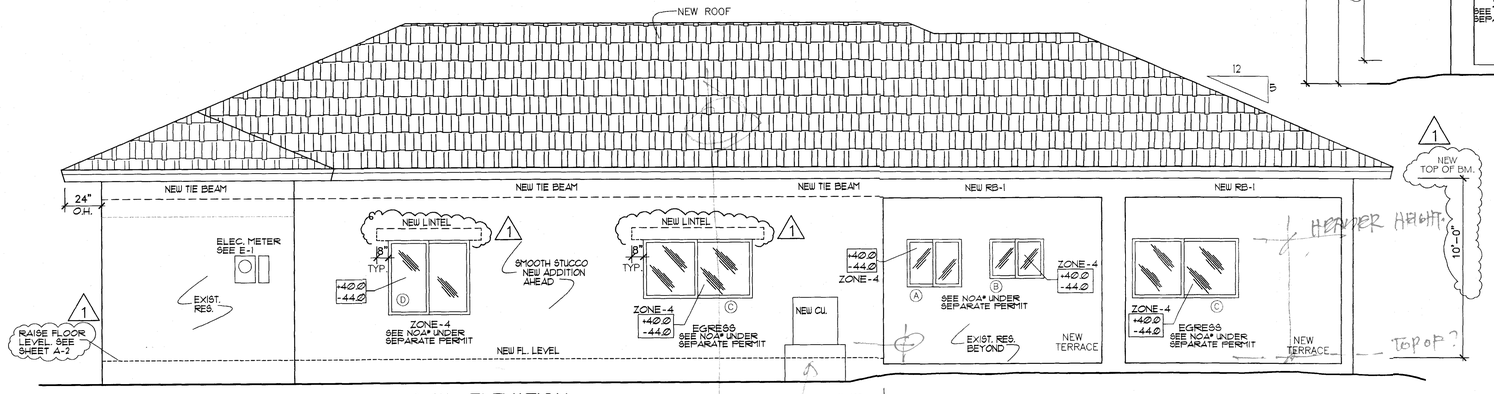

N.W. ELEVATION (REAR)
SCALE: 1/4"=1'-0"

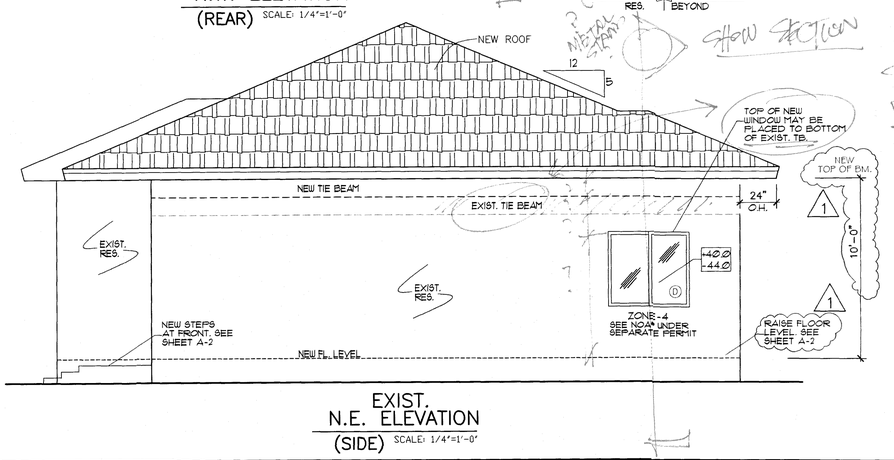

EXIST. N.E. ELEVATION (SIDE)
SCALE: 1/4"=1'-0"

8" PRECAST U-LINTELS
STANDARD LENGTHS

OVERALL LENGTH	TOP STEEL	BOTTOM STEEL
3'-0"	2 -7/32" wire	2 -#3 rebar
3'-4"	2 -7/32" wire	2 -#3 rebar
3'-6"	2 -7/32" wire	2 -#3 rebar
4'-0"	2 -7/32" wire	2 -#3 rebar
4'-6"	2 -7/32" wire	2 -#3 rebar
4'-8"	2 -7/32" wire	2 -#3 rebar
5'-4"	2 -7/32" wire	2 -#3 rebar
5'-10"	2 -7/32" wire	2 -#3 rebar
6'-0"	2 -7/32" wire	2 -#4 rebar
6'-6"	2 -7/32" wire	2 -#4 rebar
6'-8"	2 -7/32" wire	2 -#4 rebar
7'-4"	2 -7/32" wire	2 -#4 rebar
7'-6"	2 -7/32" wire	2 -#4 rebar
8'-0"	2 -#3 rebar	2 -#4 rebar
8'-8"	2 -#3 rebar	2 -#4 rebar
9'-4"	2 -#3 rebar	2 -#4 rebar
10'-0"	2 -#3 rebar	2 -#4 rebar
10'-6"	2 -#3 rebar	2 -#4 rebar
10'-8"	2 -#3 rebar	2 -#5 rebar
11'-4"	2 -#3 rebar	2 -#5 rebar
12'-0"	2 -#3 rebar	2 -#5 rebar
13'-4"	2 -#3 rebar	2 -#5 rebar
14'-0"	2 -#3 rebar	2 -#5 rebar

Additional lengths available by special order

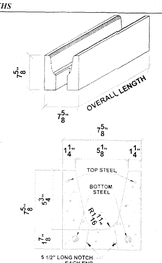

Rebar: ASTM A615 Grade 60
Wire: ASTM A510
Concrete Strength: 4000 psi
Average Self Weight: 33 plf
Finish: Grey Block

8" PRESTRESSED U-LINTELS
STANDARD LENGTHS

OVERALL LENGTH	TOP STEEL	BOTTOM STEEL
14'-8"	NONE	2 -7/16 strand
15'-4"	NONE	2 -7/16 strand
17'-4"	NONE	2 -7/16 strand
19'-4"	2 -7/32" wire	2 -7/16 strand
21'-4"	2 -7/32" wire	2 -7/16 strand 2 - #4 rebar
22'-0"	2 -7/32" wire	2 -7/16 strand 2 - #4 rebar
24'-0"	2 -7/32" wire	2 -7/16 strand 2 - #4 rebar

Additional lengths available by special order

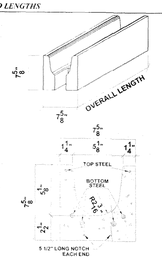

Rebar: ASTM A615 Grade 60
Wire: ASTM A510
Strand: ASTM A416 Grade 270
Concrete Strength: 6000 psi
Synthetic Fibers: 2.5 lbs/yd
Average Self Weight: 37 plf
Finish: Grey Smooth Form

WWW.CASTCRETE.COM © 2015 Cast-Crete USA, Inc.

CITY OF MIAMI SPRINGS BUILDING DEPARTMENT
FEB 04 2022
RECEIVED

OFFICE COPY
CITY OF MIAMI SPRINGS

REWORK

CITY OF MIAMI SPRINGS APPROVED FOR PERMIT ONLY

NO.	DATE
1	1-14-22 REVISED TO RAISE EXIST. FL. LEVEL TO 8.0
2	
3	
4	

DESG	DRWN	CHKD	APPV	DATE

PROJECT NAME: ADDITION TO RESIDENCE FOR:
OWNER/PH: AMBAR PREVAL 786-587-7391
ADDRESS: 200 N. ESPLANADE DRIVE, MIAMI SPRINGS, FLORIDA 33166
PROJECT ADD: SAME

Guillermo Ramon Gonzalez
9000 SW. 168th Avenue Miami Florida 33196 Ph:305-484-8171
Registered Architect #13960 Ph:786-237-5154 (assistant)

101521

A-4



Guillermo Ramon Gonzalez
R.A. 13960
STATE OF FLORIDA

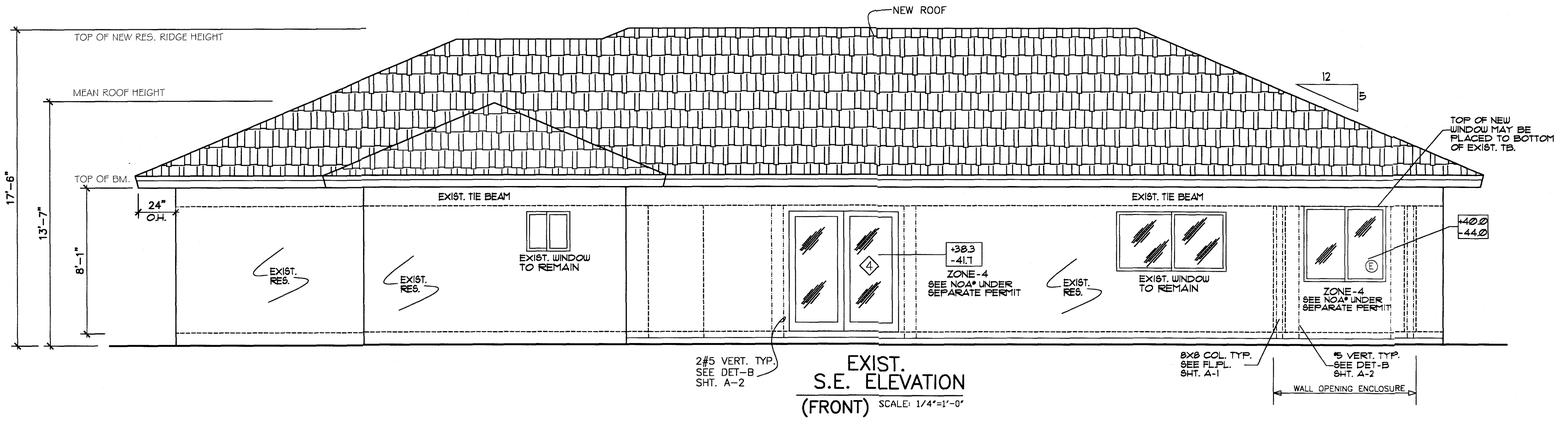

EXIST. S.E. ELEVATION (FRONT)
SCALE: 1/4"=1'-0"

NOTE: ALL EXTERIOR WALL COVERING AND ROOF ASSEMBLIES AND ROOF TOP STRUCTURES SHALL COMPLY WITH HI-VELOCITY HURRICANE ZONE AS PER CHAPTER 44 , R4401.1 & R4402.1 OF THE F.B.C. RESIDENTIAL 2020 - 7TH EDITION.

NOTE:
ALL WINDOWS, DOORS AND/OR ANY OTHER COMPONENTS INSTALLATION SHALL BE IN ACCORDANCE W/ MANUFACTURER'S SPECIFICATIONS SET FORTH IN THE APPROVED PRODUCT CONTROL APPROVAL.

NOTE: OWNER/G.C. TO VERIFY ALL NEW & WINDOWS/DOOR SIZES TO BE REMOVED/REPLACED

WINDOW SCHEDULE

NOTE: ALL WINDOW SIZES TO BE VERYFIED IN FIELD & WITH WINDOW MANUFG. PRIOR TO COMPONENT FABRICATION & INSTALLATION.

MARK	OPENING WIDTH	OPENING HEIGTH	CODE	TYPE	AREA (SF)	MATERIAL	REMARKS ALL NEW WINDOWS TO BE IMPACT RESISTANT
A	37	38 3/8"	3030	HORZ. ROLLER	9.60	ALUM./GLASS	SEE N.O.A. SEPARATE PERMIT
B	37	26	3020	HORZ. ROLLER	6.20	ALUM./GLASS	SEE N.O.A. TEMP. CAT-2 FROSTED
C	74-1/8	38 3/8"	6030	HORZ. ROLLER	20.20	ALUM./GLASS	SEE N.O.A. EGRESS
D	53 1/8	50 5/8	6040	HORZ. ROLLER	18.75	ALUM./GLASS	SEE N.O.A. EGRESS
E							

NOTE: ALL NEW WINDOWS & EXTERIOR DOOR TO BE IMPACT RESISTANT SEE NOAS.

WINDOW U VALUE 1.20
WINDOW shgc U VALUE 0.45

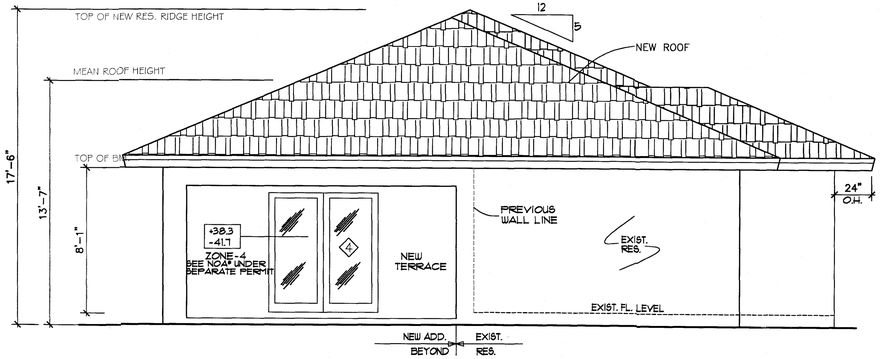

S.W. ELEVATION (SIDE)
SCALE: 1/4"=1'-0"

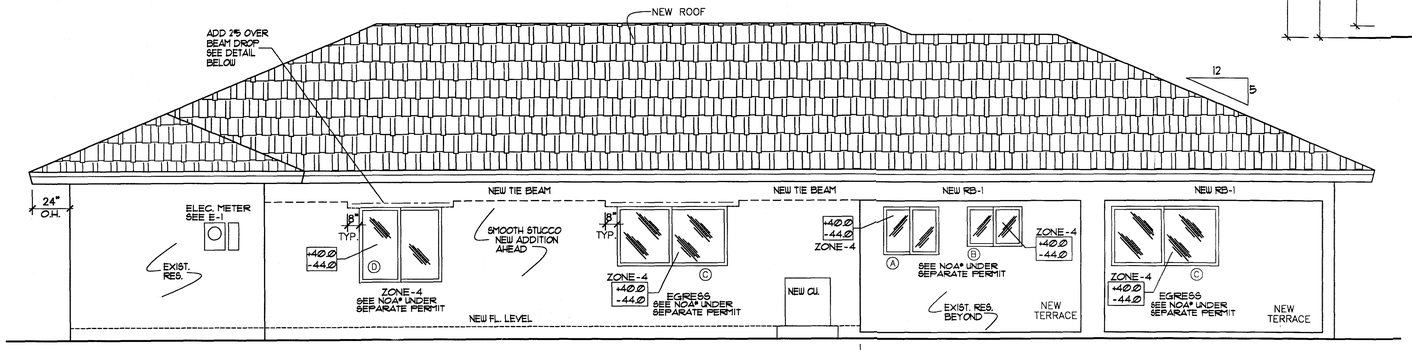

N.W. ELEVATION (REAR)
SCALE: 1/4"=1'-0"

NOTE: ALL NEW WINDOWS & EXTERIOR DOORS TO BE IMPACT RESISTANT SEE NOAS. ALSO TO BE UNDER A SEPARATE SUB PERMIT. NOT A PART OF THIS PERMIT.

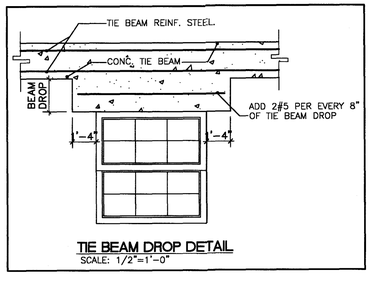

TIE BEAM DROP DETAIL
SCALE: 1/2"=1'-0"

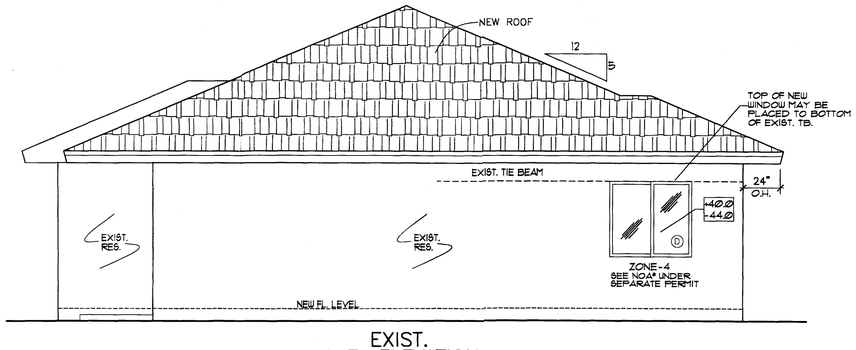

EXIST. N.E. ELEVATION (SIDE)
SCALE: 1/4"=1'-0"

CITY OF MIAMI SPRINGS
APPROVED
FOR PERMIT ONLY

STATE OF FLORIDA
GUILLERMO RAMON GONZALEZ
LICENSE NO. AR0013960
REGISTERED ARCHITECT

Guillermo Ramon Gonzalez
R.A. 13960
STATE OF FLORIDA

NO.	DATE
1	
2	
3	
4	

DES'D	DRWN	CHK'D	APP'V	DATE
•	•	•	•	•

PROJECT NAME: ADDITION TO RESIDENCE FOR:
OWNER/PH: AMBAR PREVAL 786-587-7391
ADDRESS:200 N. ESPLANADE DRIVE MIAMI SPRINGS, FLORIDA 33166
PROJECT ADD: SAME

Guillermo Ramon Gonzalez
9000 SW. 168th Avenue Miami Florida 33196 Ph:305-484-8171
Registered Architect #13960 Ph:786-237-5154 (assistant)

101521

A-4

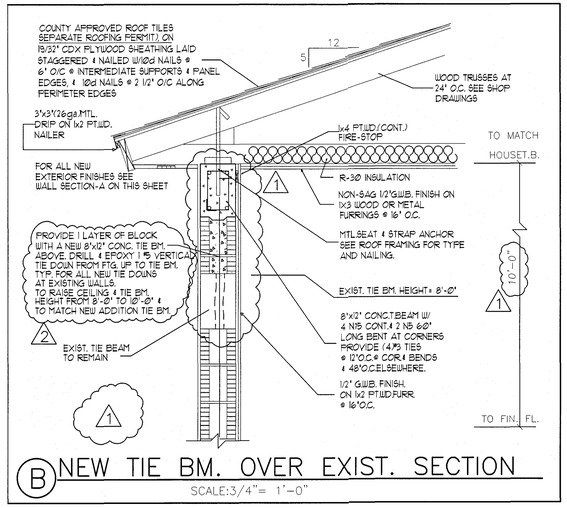

(B) NEW TIE BM. OVER EXIST. SECTION

SCALE:3/4"= 1'-0"

BEAM SCHEDULE:

TB AT (8'-0") A.F.F.) =8"x12" CONCRETE BEAM WITH 4#5 CONT. & (2) 60" LONG BENT BARS AT CORNERS. PROVIDE #3 TIES (4) FROM CORNERS AT 12" REM. AT 48"O.C.
ALL NEW TIE BEAMS TO MATCH EXISTING TB. ELEVATION

RB-1 AT (8'-0") A.F.F.) =8"x12" CONCRETE BEAM WITH 2#5 TOP, 2#5 BOT. WITH (2) #5 60" LONG LONG BENT BARS AT CORNERS. PROVIDE #3 TIES (4) FROM CORNERS AT 3" REM. AT 5 "O.C.

ROOF VENTILATION CALCULATIONS: FOR TRUSS PORTION ONLY

(SOFFIT) (RIDGE) OPTIONAL (NOT PROVIDED)

REQUIRED 1/150 VENT TO CEILING RATIO
NEW TRUSS ROOF AREA = 2,950 SQ. FT. "WITH OVERHANG"
2,950/150 = 19.66 SQ. FT. OF VENTING AREA REQUIRED
DESIGN SELECTION: 4"X24" ALUMN. SCREEN = 0.66 S.Q. FT.
TOTAL REQ'D. 19.66 S.Q. FT. / 0.66 = 30 PCS.
PROPOSED PROVIDED: 32 PCS.

FOR WOOD AND FRAMING NOTES SEE SHEET A-3

GRAVITY & UPLIFT LOADS

A	GRAVITY: 488# NET UPLIFT: 415# USE (1)-NVST.A16 BY 'NU-VUE' WITH 9-10Gd NAILS @ STRAP & 6-10Gd NAILS @ SEAT N.O.A.# 20-0901.05	E	GRAVITY: 2,340# NET UPLIFT: 2,088# USE (1)SPECIAL BRACKET SEE DETAIL SHEET A-3 ALSO USE AT OTHER SIDE
B	GRAVITY: 1,620# (DOUBLE STRAP) NET UPLIFT: 1,188# USE (1)-NVHTA24 BY 'NU-VUE' WITH 18-10Gd NAILS @ 2-STRAPS & 6-10Gd NAILS @ SEAT N.O.A.# 20-0901.05	G	GRAVITY: 965# NET UPLIFT: 930# USE (1)-NVST.A16 BY 'NU-VUE' WITH 9-10Gd NAILS @ STRAP & 6-10Gd NAILS @ SEAT N.O.A.# 20-0901.05
C	GRAVITY: 1,210# NET UPLIFT: 1,210# USE (1)-NVST.A16 BY 'NU-VUE' WITH 9-10Gd NAILS @ STRAP & 6-10Gd NAILS @ SEAT N.O.A.# 20-0901.05	F	GRAVITY: 1,660# (DOUBLE STRAP) NET UPLIFT: 1,130# USE (1)-NVHTA24 BY 'NU-VUE' WITH 18-10Gd NAILS @ 2-STRAPS & 6-10Gd NAILS @ SEAT N.O.A.# 20-0901.05
D	GRAVITY: 3,970# NET UPLIFT: 3,970# USE (1)SPECIAL BRACKET SEE DETAIL SHEET A-3 ALSO USE AT OTHER SIDE	H	GRAVITY: 2,530# (DOUBLE STRAP) NET UPLIFT: 1,820# USE (1)-NVHTA24 BY 'NU-VUE' WITH 18-10Gd NAILS @ 2-STRAPS & 6-10Gd NAILS @ SEAT N.O.A.# 20-0901.05
J	GRAVITY: 835# NET UPLIFT: 760# USE (1)-NVST.A16 BY 'NU-VUE' WITH 9-10Gd NAILS @ STRAP & 6-10Gd NAILS @ SEAT N.O.A.# 20-0901.05	I	GRAVITY: 2,840# (DOUBLE STRAP) NET UPLIFT: 2,275# USE (1)-NVHTA24 BY 'NU-VUE' WITH 18-10Gd NAILS @ 2-STRAPS & 6-10Gd NAILS @ SEAT N.O.A.# 20-0901.05

I CERTIFY THIS IS BEING DESIGNED TO WITHSTAND 175 MPH WIND SPEED ACCORDING TO ASCE 7-16 AS REQUIRED BY THE FLORIDA BUILDING CODE REVISED 2020 EDITION 7th EDITION

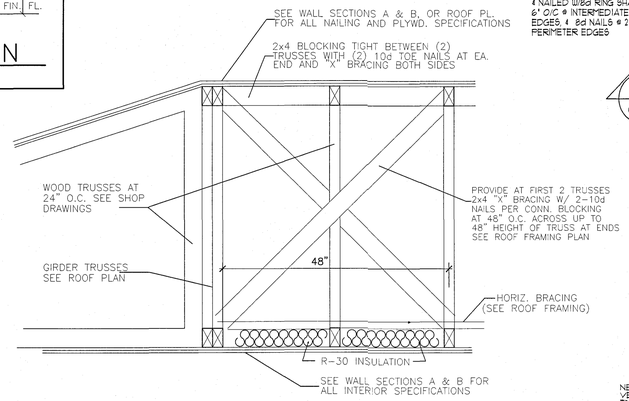

TYP. CROSS BRACING SECTION

SCALE: 3/4"= 1'-0"

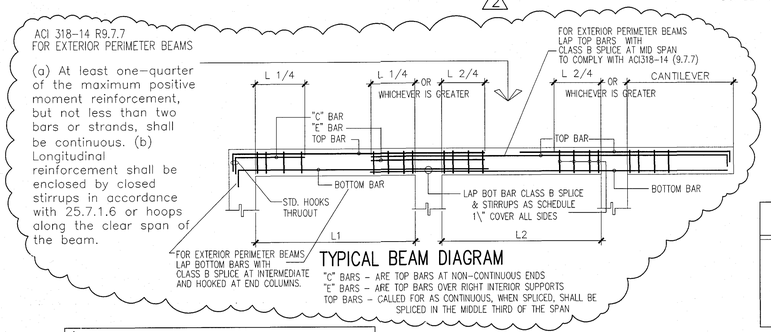

TYPICAL BEAM DIAGRAM

"C" BARS – ARE TOP BARS AT NON-CONTINUOUS ENDS
"E" BARS – ARE TOP BARS OVER RIGHT INTERIOR SUPPORTS
TOP BARS – CALLED FOR AS CONTINUOUS, WHEN SPLICED, SHALL BE SPLICED IN THE MIDDLE THIRD OF THE SPAN

WOOF TRUSS ROOF DESIGN LOADS:

T.C.L.L.---------- = 30 P.S.F.
T.C.D.L.---------- = 15 P.S.F.
B.C.D.L.---------- = 10 P.S.F.

TOTAL ---------- = 55 P.S.F.
THIS IS A ROOF TRUSS TYPE SYSTEM

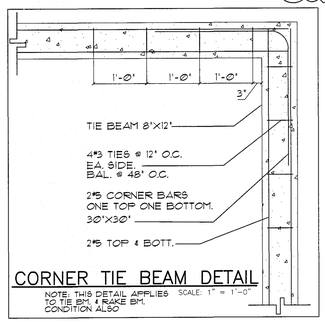

CORNER TIE BEAM DETAIL

NOTE: THIS DETAIL APPLIES TO TIE BM. & RAKE BM. CONDITION ALSO

SCALE: 1" = 1'-0"

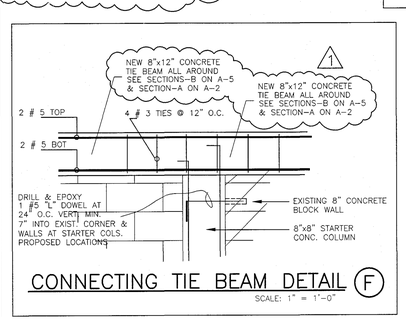

CONNECTING TIE BEAM DETAIL (F)

SCALE: 1" = 1'-0"

NOTE: ROOF TRUSS SHOP DRAWINGS AND ENGINEERING PACKAGE TO BE SUBMITTED AND PROCESSED UNDER A SEPARATE PERMIT.

NOTE: ALL NEW ROOFING SYSTEM-MATERIALS TO HAVE A VALID N.O.A., PRODUCT APPROVALS & TO BE SUBMITTED FOR REVIEW AT TIME OF ROOFING PERMIT APPLICATION UNDER SEPARATE SUB PERMIT.

NOTE: ALL EXTERIOR WALL COVERING AND ROOF ASSEMBLIES AND ROOF TOP STRUCTURES SHALL COMPLY WITH HI-VELOCITY HURRICANE ZONE AS PER CHAPTER 44 , R4401.1 & R4402.1 OF THE F.B.C. RESIDENTIAL 2020 -7th EDITION.

NOTE: GENERAL CONTRACTOR TO FIELD VERIFY ALL EXISTING FIELD CONDITIONS & DIMENSIONS WITH ALL PROPOSED NEW CONSTRUCTION PRIOR TO ANY NEW CONSTRUCTION FABRICATION OR INSTALLATIONS INCLUDING BUT NOT LIMITED TO: NEW TRUSS SIZES, PITCH LENGTHS DIMENSIONS, ETC.

NOTE: FOR ALL STRAPS SPECIFIED SEE SPECS ON PRODUCT APPROVAL ATTACHED ALL STRAPS TO BE BY 'NU-VUE' OR APPROVED EQUAL

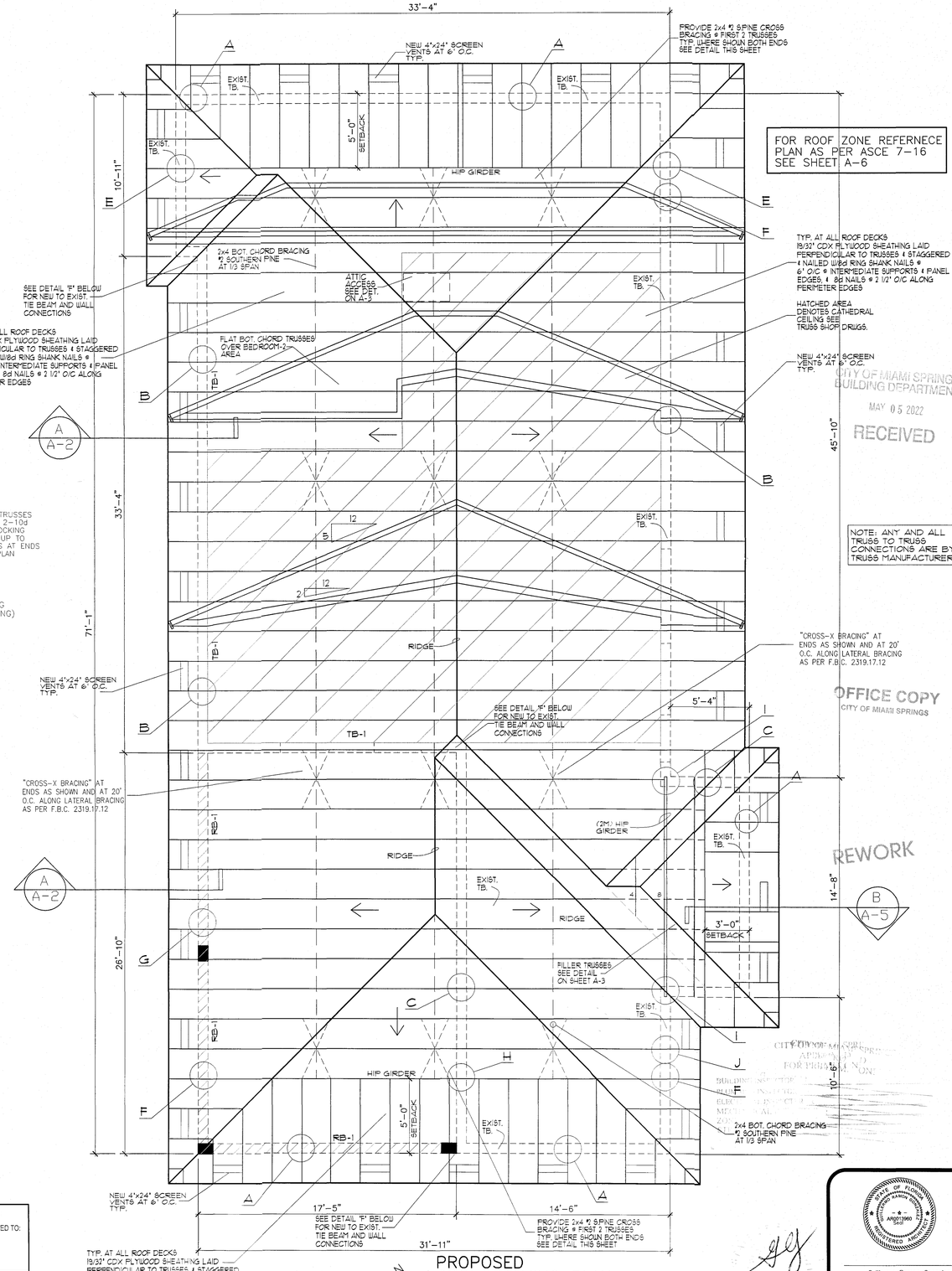

PROPOSED ROOF FRAMING PLAN

SCALE= 1/4"= 1'-0"

NO.	DATE
1	2-1-22 REVISED TO RAISE EXIST. FL. LEVEL TO 8.0
2	4-25-22 REVISED TO RAISE EXIST. FL. LEVEL TO 8.0
3	.
4	.

DESIG	DRWN	CHKD	APRV	DATE
.	.	.	.	.

PROJECT NAME: ADDITION TO RESIDENCE FOR:
OWNER/PH: AMBAR PREVAL 786-587-7391
ADDRESS:200 N. ESPLANADE DRIVE MIAMI SPRINGS, FLORIDA 33166
PROJECT ADD: SAME

Guillermo Ramon Gonzalez
9000 SW. 168th Avenue Miami Florida 33196
Registered Architect #13960
Ph:305-484-8171
Ph:786-237-5154 (assistant)

Guillermo Ramon Gonzalez
R.A. 13960
STATE OF FLORIDA

3/4/22

101521

A-5

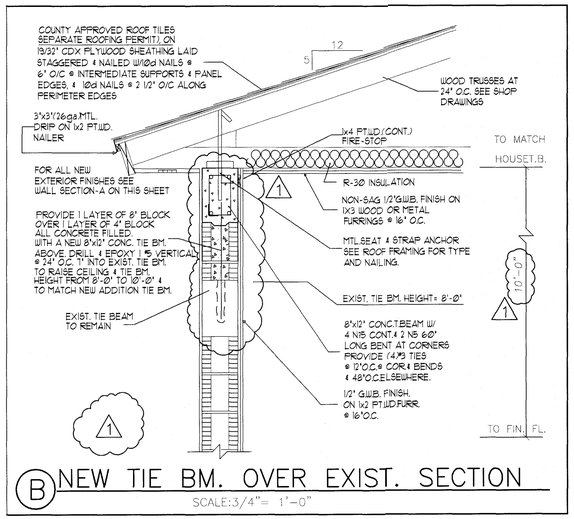

(B) NEW TIE BM. OVER EXIST. SECTION

SCALE:3/4"= 1'-0"

GRAVITY & UPLIFT LOADS

A	GRAVITY: 318# NET UPLIFT: 325# USE 2-NVRT36 BY "NU-VUE" WITH 12-16d NAILS @ STRAP & (8) 1/4"x 1 1/2"LONG TAPCON SCREWS AT EA. STRAP TO EXIST. SIDE OF TB. CONNECTION	E	GRAVITY: 3,175# NET UPLIFT: 3,750# USE (1)SPECIAL BRACKET SEE DETAIL SHEET A-3 ALSO USE AT OTHER SIDE
B	GRAVITY: 2,305# NET UPLIFT: 2,450# USE (1)-NVHTA30 BY "NU-VUE" WITH (8)-10d. NAILS @ 2-STRAPS & (8)-10d NAILS @ SEAT N.O.A.# 20-0901.05	BB	GRAVITY: 2,305# (DOUBLE STRAP) NET UPLIFT: 2,450# (DOUBLE STRAP) USE 2-NVRT48 BY "NU-VUE" WITH 12-16d NAILS @ EACH STRAP & (8) 1/4"x 1 1/2"LONG TAPCON SCREWS AT EA. STRAP TO EXIST. SIDE OF TB. CONNECTION
C	GRAVITY: 1,210# NET UPLIFT: 1,230# USE 2-NVRT36 BY "NU-VUE" WITH 12-16d NAILS @ STRAP & (8) 1/4"x 1 1/2"LONG TAPCON SCREWS AT EA. STRAP TO EXIST. SIDE OF TB. CONNECTION		
D	GRAVITY: 3,937# NET UPLIFT: 3,970# USE (1)SPECIAL BRACKET SEE DETAIL SHEET A-3 ALSO USE AT OTHER SIDE		

I CERTIFY THIS IS BEING DESIGNED TO WITHSTAND 175 MPH WIND SPEED ACCORDING TO ASCE 7-16 AS REQUIRED BY THE FLORIDA BUILDING CODE REVISED 2020 EDITION 7th EDITION

BEAM SCHEDULE:

TB AT (8'-0") A.F.F.) =8"x12" CONCRETE BEAM WITH 4#5 CONT. & (2) 60" LONG BENT BARS AT CORNERS. PROVIDE #3 TIES (4) FROM CORNERS AT 12" REM. AT 48"O.C.
ALL NEW TIE BEAMS TO MATCH EXISTING TB. ELEVATION

RB-1 AT (8'-0") A.F.F.) =8"x12" CONCRETE BEAM WITH 2#5 TOP, 2#5 BOT. WITH (2) #5 60" LONG LONG BENT BARS AT CORNERS. PROVIDE #3 TIES (4) FROM CORNERS AT 3" REM. AT 5 "O.C.

ROOF VENTILATION CALCULATIONS: FOR TRUSS PORTION ONLY

(SOFFIT) (RIDGE) OPTIONAL (NOT PROVIDED)

REQUIRED 1/150 VENT TO CEILING RATIO
NEW TRUSS ROOF AREA = 2,950 SQ. FT. "WITH OVERHANG"
2,950/150 = 19.66 SQ. FT. OF VENTING AREA REQUIRED
DESIGN SELECTION: 4"X24" ALUMN. SCREEN = 0.66 S.Q. FT.
TOTAL REQ'D. 19.66 S.Q. FT. / 0.66 = 30 PCS.
PROPOSED PROVIDED: 32 PCS.

FOR WOOD AND FRAMING NOTES SEE SHEET A-3

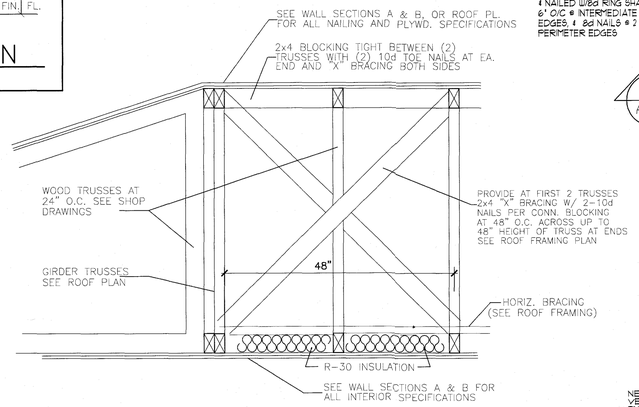

TYP. CROSS BRACING SECTION

SCALE: 3/4"= 1'-0"

ACI 318-14 R9.7.7
FOR EXTERIOR PERIMETER BEAMS

(a) At least one-quarter of the maximum positive moment reinforcement, but not less than two bars or strands, shall be continuous. (b) Longitudinal reinforcement shall be enclosed by closed stirrups in accordance with 25.7.1.6 or hoops along the clear span of the beam.

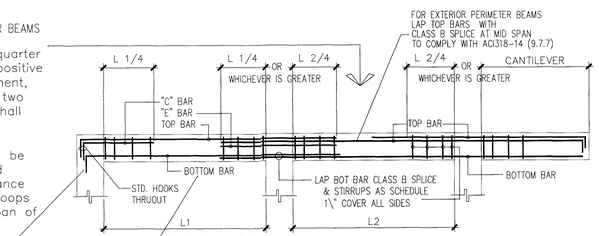

TYPICAL BEAM DIAGRAM

"C" BARS – ARE TOP BARS AT NON-CONTINUOUS ENDS
"E" BARS – ARE TOP BARS OVER RIGHT INTERIOR SUPPORTS
TOP BARS – CALLED FOR AS CONTINUOUS, WHEN SPLICED, SHALL BE SPLICED IN THE MIDDLE THIRD OF THE SPAN

WOOF TRUSS ROOF DESIGN LOADS:

T.C.L.L.	= 30 P.S.F.
T.C.D.L.	= 15 P.S.F.
B.C.D.L.	= 10 P.S.F.
TOTAL	= 55 P.S.F.

THIS IS A ROOF TRUSS TYPE SYSTEM

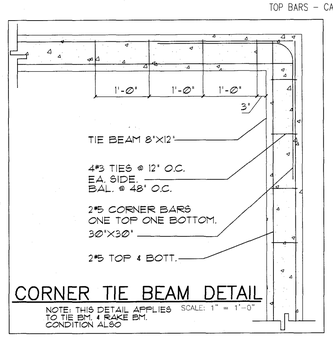

CORNER TIE BEAM DETAIL

NOTE: THIS DETAIL APPLIES TO TIE BM. & RAKE BM. CONDITION ALSO SCALE: 1" = 1'-0"

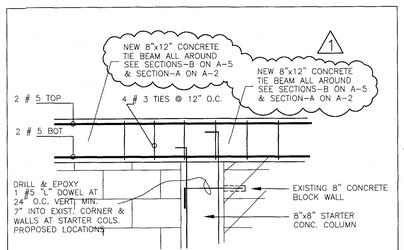

CONNECTING TIE BEAM DETAIL (F)

SCALE: 1" = 1'-0"

NOTE: ROOF TRUSS SHOP DRAWINGS AND ENGINEERING PACKAGE TO BE SUBMITTED AND PROCESSED UNDER A SEPARATE PERMIT.

NOTE: ALL NEW ROOFING SYSTEM-MATERIALS TO HAVE A VALID N.O.A., PRODUCT APPROVALS & TO BE SUBMITTED FOR REVIEW AT TIME OF ROOFING PERMIT APPLICATION UNDER SEPARATE SUB PERMIT.

NOTE: ALL EXTERIOR WALL COVERING AND ROOF ASSEMBLIES AND ROOF TOP STRUCTURES SHALL COMPLY WITH HI-VELOCITY HURRICANE ZONE AS PER CHAPTER 44 , R4401.1 & R4402.1 OF THE F.B.C. RESIDENTIAL 2020 -7th EDITION.

NOTE: GENERAL CONTRACTOR TO FIELD VERIFY ALL EXISTING FIELD CONDITIONS & DIMENSIONS WITH ALL PROPOSED NEW CONSTRUCTION PRIOR TO ANY NEW CONSTRUCTION FABRICATION OR INSTALLATIONS INCLUDING BUT NOT LIMITED TO: NEW TRUSS SIZES, PITCH LENGTHS DIMENSIONS, ETC.

NOTE: FOR ALL STRAPS SPECIFIED SEE SPECS ON PRODUCT APPROVAL ATTACHED ALL STRAPS TO BE BY "NU-VUE" OR APPROVED EQUAL

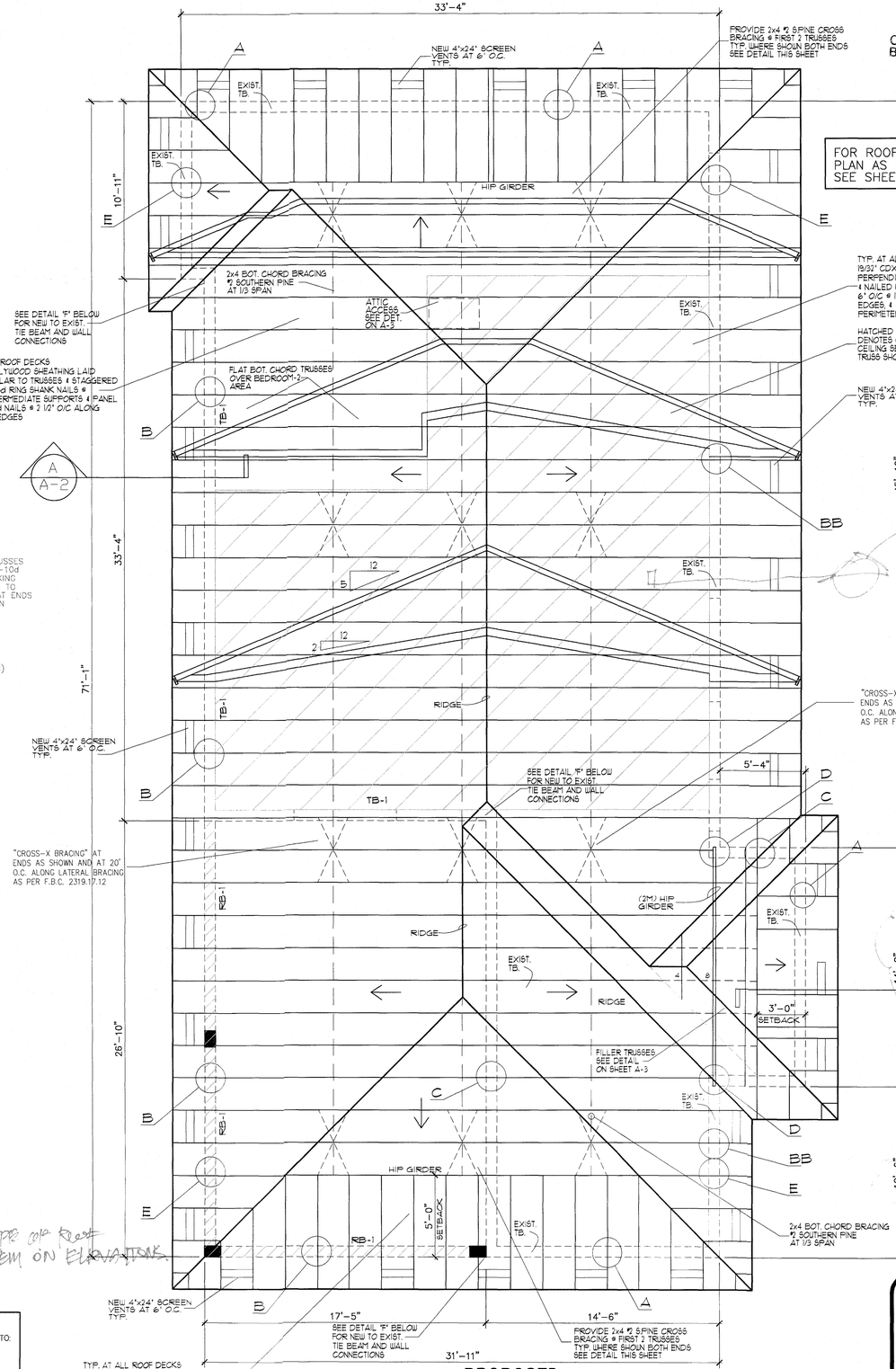

PROPOSED ROOF FRAMING PLAN

SCALE= 1/4"= 1'-0"

FOR ROOF ZONE REFERNECE PLAN AS PER ASCE 7-16 SEE SHEET A-6

CITY OF MIAMI SPRINGS BUILDING DEPARTMENT
FEB 04 2022
RECEIVED

OFFICE COPY
CITY OF MIAMI SPRINGS

REWORK

SHOW LOCATION OF SEPARATE VENTS FOR EXH. FANS

CITY OF MIAMI SPRINGS APPROVED FOR PERMIT ISSUANCE
BY
DIRECTOR

NO.	DATE
1	2-1-22 REVISED TO RAISE EXIST. FL. LEVEL TO 8.0
2	
3	
4	

DESIG. • DRWN. • CHKD. • APPV. • DATE •

PROJECT NAME: ADDITION TO RESIDENCE FOR:
OWNER/PH: AMBAR PREVAL 786-587-7391
ADDRESS:200 N. ESPLANADE DRIVE MIAMI SPRINGS, FLORIDA 33166
PROJECT ADD: SAME

Guillermo Ramon Gonzalez
9000 SW. 168th Avenue Miami Florida 33196
Registered Architect #13960
Ph:305-484-8171
Ph:786-237-5154
(assistant)

STATE OF FLORIDA GUILLERMO RAMON GONZALEZ AR0013960 REGISTERED ARCHITECT
Guillermo Ramon Gonzalez
R.A. 13960
STATE OF FLORIDA

101521

A-5

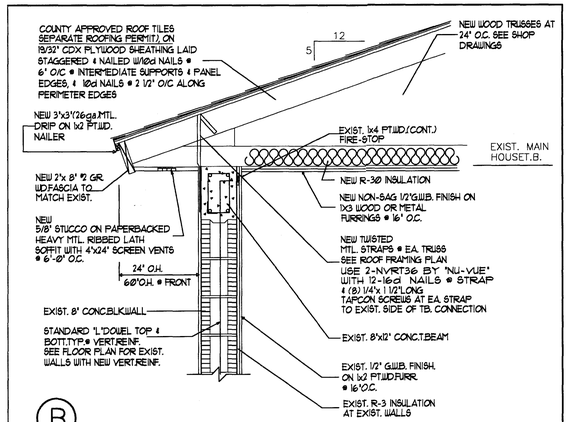

B

NEW ROOF TRUSSES OVER EXIST. WALLS

SCALE:3/4"= 1'-0"

GRAVITY & UPLIFT LOADS

A	GRAVITY: 315# NET UPLIFT: 325# USE 2-NVRT36 BY "NU-VUE" WITH 12-16d NAILS @ STRAP & (8) 1/4"x 1 1/2"LONG TAPCON SCREWS AT EA. STRAP TO EXIST. SIDE OF TB. CONNECTION	E	GRAVITY: 3,150# NET UPLIFT: 3,150# USE (1)SPECIAL BRACKET SEE DETAIL SHEET A-3 ALSO USE AT OTHER SIDE
B	GRAVITY: 2,325# (DOUBLE STRAP) NET UPLIFT: 2,450# USE (1)-NVHTA20 BY "NU-VUE" WITH 18-10d NAILS @ 2-STRAPS & 6-16d NAILS @ SEAT N.O.A.# 22-0302.05	BB	GRAVITY: 2,325# (DOUBLE STRAP) NET UPLIFT: 2,450# USE 2-NVRT48 BY "NU-VUE" WITH 12-16d NAILS @ EACH STRAP & (8) 1/4"x 1 1/2"LONG TAPCON SCREWS AT EA. STRAP TO EXIST. SIDE OF TB. CONNECTION
C	GRAVITY: 1,200# NET UPLIFT: 1,200# USE 2-NVRT36 BY "NU-VUE" WITH 12-16d NAILS @ STRAP & (8) 1/4"x 1 1/2"LONG TAPCON SCREWS AT EA. STRAP TO EXIST. SIDE OF TB. CONNECTION		
D	GRAVITY: 3,970# NET UPLIFT: 3,970# USE (1)SPECIAL BRACKET SEE DETAIL SHEET A-3 ALSO USE AT OTHER SIDE		

I CERTIFY THIS IS BEING DESIGNED TO WITHSTAND 175 MPH WIND SPEED ACCORDING TO ASCE 7-16 AS REQUIRED BY THE FLORIDA BUILDING CODE REVISED 2020 EDITION 7th EDITION

BEAM SCHEDULE:

TB AT (8'-0") A.F.F.) =8"x12" CONCRETE BEAM WITH 4#5 CONT. & (2) 60" LONG BENT BARS AT CORNERS. PROVIDE #3 TIES (4) FROM CORNERS AT 12" REM. AT 48"O.C.
ALL NEW TIE BEAMS TO MATCH EXISTING TB. ELEVATION

RB-1 AT (8'-0") A.F.F.) =8"x12" CONCRETE BEAM WITH 2#5 TOP, 2#5 BOT. WITH (2) #5 60" LONG LONG BENT BARS AT CORNERS. PROVIDE #3 TIES (4) FROM CORNERS AT 3" REM. AT 5 "O.C.

ROOF VENTILATION CALCULATIONS: FOR TRUSS PORTION ONLY

(SOFFIT) (RIDGE) OPTIONAL (NOT PROVIDED)

REQUIRED 1/150 VENT TO CEILING RATIO
NEW TRUSS ROOF AREA = 2,950 SQ. FT. "WITH OVERHANG"
2,950/150 = 19.66 SQ. FT. OF VENTING AREA REQUIRED
DESIGN SELECTION: 4"X24" ALUMN. SCREEN = 0.66 S.Q. FT.
TOTAL REQ'D. 19.66 S.Q. FT. / 0.66 = 30 PCS.
PROPOSED PROVIDED: 32 PCS.

FOR WOOD AND FRAMING NOTES SEE SHEET A-3

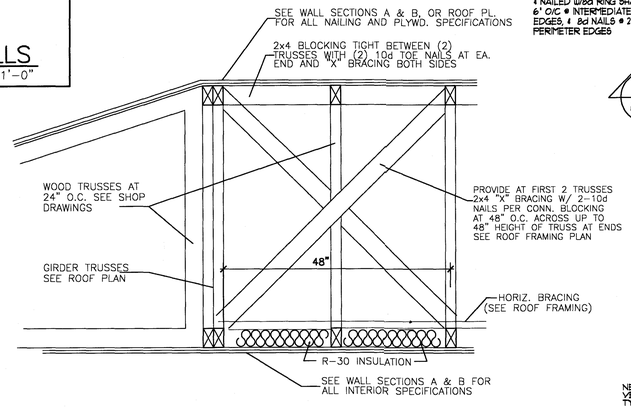

TYP. CROSS BRACING SECTION

SCALE: 3/4"= 1'-0"

ACI 318-14 R9.7.7
FOR EXTERIOR PERIMETER BEAMS

(a) At least one-quarter of the maximum positive moment reinforcement, but not less than two bars or strands, shall be continuous. (b) Longitudinal reinforcement shall be enclosed by closed stirrups in accordance with 25.7.1.6 or hoops along the clear span of the beam.

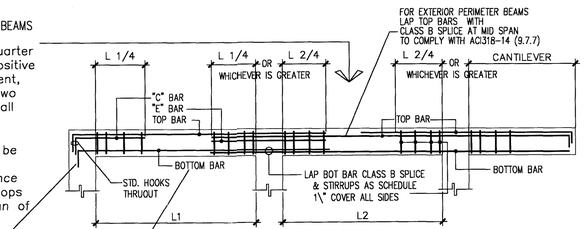

TYPICAL BEAM DIAGRAM

"C" BARS - ARE TOP BARS AT NON-CONTINUOUS ENDS
"E" BARS - ARE TOP BARS OVER RIGHT INTERIOR SUPPORTS
TOP BARS - CALLED FOR AS CONTINUOUS, WHEN SPLICED, SHALL BE SPLICED IN THE MIDDLE THIRD OF THE SPAN

WOOF TRUSS ROOF DESIGN LOADS:

T.C.L.L.---------- = 30 P.S.F.
T.C.D.L.---------- = 15 P.S.F.
B.C.D.L.---------- = 10 P.S.F.

TOTAL ---------- = 55 P.S.F.
THIS IS A ROOF TRUSS TYPE SYSTEM

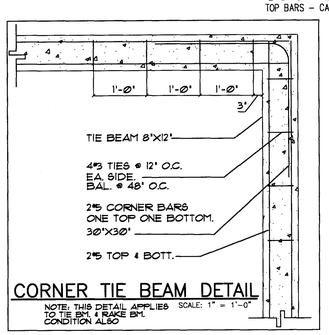

CORNER TIE BEAM DETAIL

NOTE: THIS DETAIL APPLIES TO TIE BM. & RAKE BM. CONDITION ALSO

SCALE: 1" = 1'-0"

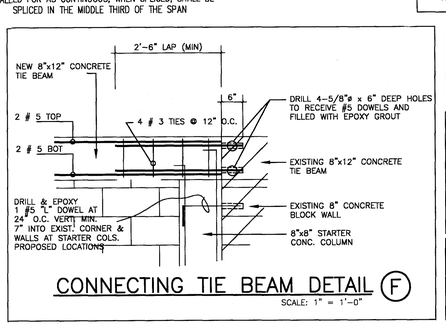

CONNECTING TIE BEAM DETAIL (F)

SCALE: 1" = 1'-0"

NOTE: ROOF TRUSS SHOP DRAWINGS AND ENGINEERING PACKAGE TO BE SUBMITTED AND PROCESSED UNDER A SEPARATE PERMIT.

NOTE: ALL NEW ROOFING SYSTEM-MATERIALS TO HAVE A VALID N.O.A., PRODUCT APPROVALS & TO BE SUBMITTED FOR REVIEW AT TIME OF ROOFING PERMIT APPLICATION UNDER SEPARATE SUB PERMIT.

NOTE: ALL EXTERIOR WALL COVERING AND ROOF ASSEMBLIES AND ROOF TOP STRUCTURES SHALL COMPLY WITH HI-VELOCITY HURRICANE ZONE: AS PER CHAPTER 44 , R4401.1 & R4402.1 OF THE F.B.C. RESIDENTIAL 2020 -7th EDITION.

NOTE: GENERAL CONTRACTOR TO FIELD VERIFY ALL EXISTING FIELD CONDITIONS & DIMENSIONS WITH ALL PROPOSED NEW CONSTRUCTION PRIOR TO ANY NEW CONSTRUCTION FABRICATION OR INSTALLATIONS INCLUDING BUT NOT LIMITED TO: NEW TRUSS SIZES, PITCH LENGTHS DIMENSIONS, ETC.

NOTE: FOR ALL STRAPS SPECIFIED SEE SPECS ON PRODUCT APPROVAL ATTACHED ALL STRAPS TO BE BY "NU-VUE" OR APPROVED EQUAL

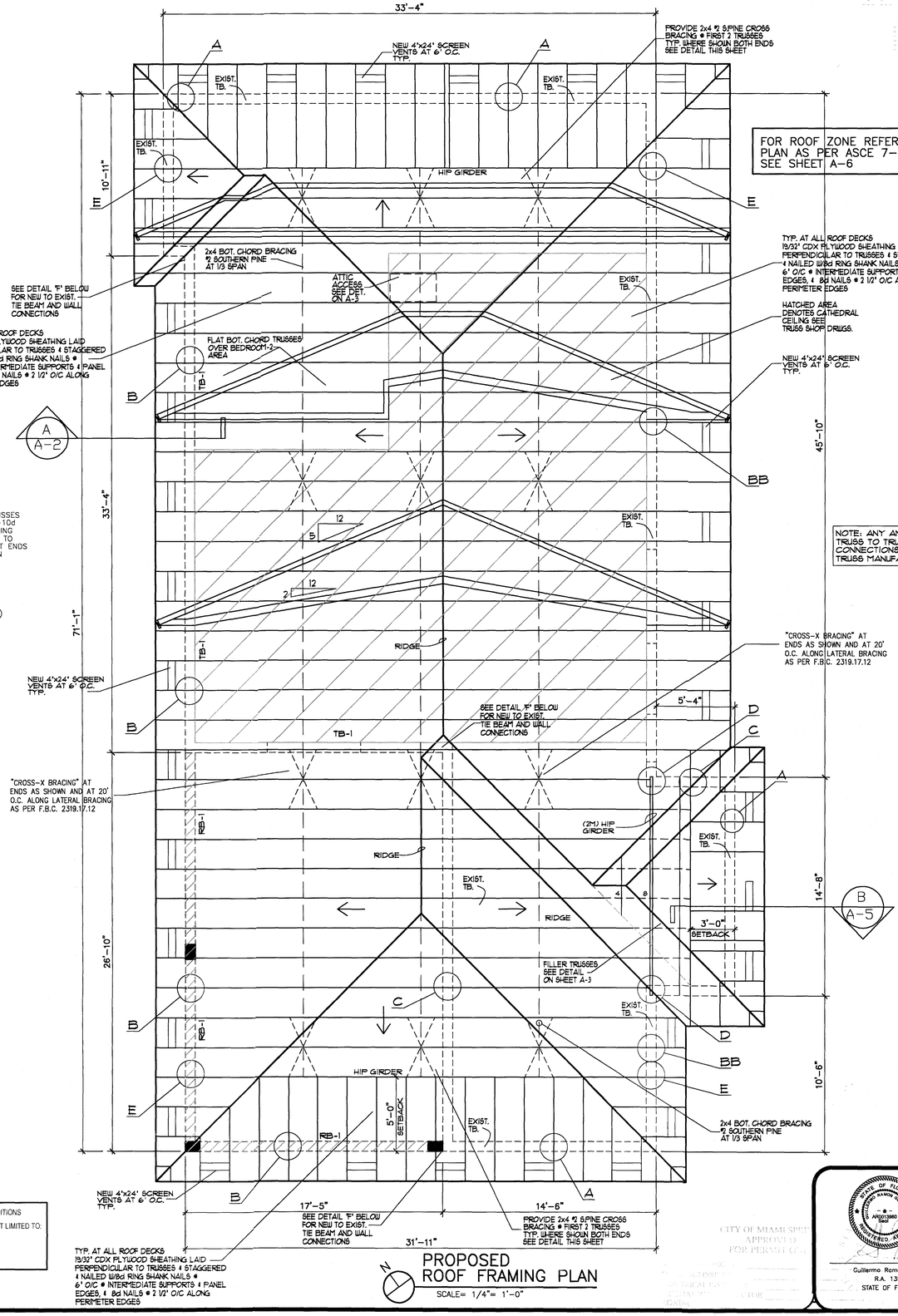

PROPOSED ROOF FRAMING PLAN

SCALE= 1/4"= 1'-0"

NO.	DATE
1	
2	
3	
4	

DESG	DRWN	CHKD	APRV	DATE

PROJECT NAME: ADDITION TO RESIDENCE FOR:
OWNER/PH: AMBAR PREVAL 786-587-7391
ADDRESS:200 N. ESPLANADE DRIVE MIAMI SPRINGS, FLORIDA 33166
PROJECT ADD: SAME

Guillermo Ramon Gonzalez
9000 SW. 168th Avenue Miami Florida 33196 Ph:305-484-8171 Ph:786-237-5154 (assistant)
Registered Architect #13960

STATE OF FLORIDA AR0013960 GUILLERMO RAMON GONZALEZ REGISTERED ARCHITECT

Guillermo Ramon Gonzalez
R.A. 13960
STATE OF FLORIDA

CITY OF MIAMI SPRINGS APPROVED FOR PERMIT

101521

A-5

ELECTRICAL NOTES:

1. ALL WORK SHALL BE PERFORMED IN ACCORDANCE WITH THE LATEST EDITION OF THE NEC, & NFPA-70 AND ALL OTHER PERTAINING CODES AND REGULATIONS ESTABLISHED BY AUTHORITIES HAVING JURISDICTION, AND SHALL MEET THE REQUIREMENTS OF OTHER RECOGNIZED STANDARDS AS THE ASTM,IEEE,NFPA AND NEMA,WHERE THE REQUIREMENTS OF SUCH STANDARDS ARE MORE STRINGENT THAN THOSE CITED ABOVE.
2. ALL WORK SHALL BE PERFORMED BY A LICENSED ELECTRICAL CONTRACTOR IN A FIRST CLASS MANNER, FULLY OPERATIVE, AND TO THE ACCEPTANCE OF THE OWNER AND THE ENGINEER.
3. ALL ELECTRICAL MATERIALS AND EQUIPMENT SHALL BE APPROVED BY U.L.AND SHALL BEAR THE U.L.LABEL.
4. THE PLANS ARE GENERALLY DIAGRAMMATIC AND THE CONTRACTOR SHALL COORDINATE HIS WORK WITH THE WORK OF OTHER TRADES SO THAT INTERFERENCE BETWEEN CONDUITS PIPING AND STRUCTURAL WORK WILL BE AVOIDED.
5. THE CONTRACTOR SHALL HAVE VISITED THE JOB SITE BEFORE BIDDING AND ASCERTAINED ALL EXISTING CONDITIONS WHICH WILL AFFECT HIS WORK. FAILURE TO DO SO WILL NOT BE ACCEPTED AS A REASON FOR REQUESTING EXTRA PAY IN THE EVENT THAT THE EXISTING CONDITIONS RESULT IN EXTRA MATERIALS OR LABOR.
6. ANY EXISTING CONDITION FOUND BY THE CONTRACTOR WHICH WILL ADVERSELY AFFECT THE WORK SHALL IMMEDIATELY BE BROUGHT TO THE ATTENTION OF THE OWNER AND/OR THE ENGINEER.
7. AFTER THE SYSTEM IS INSTALLED CONTRACTOR SHALL CONDUCT AN OPERATIVE TEST FOR APPROVAL AND ACCEPTANCE BY THE OWNER. EQUIPMENT SHALL BE GUARANTEED FOR A PERIOD OF 1 YEAR FROM THE DATE OF FINAL ACCEPTANCE THEREOF AGAINST DEFECTIVE MATERIALS AND WORKMANSHIP.
8. ALL CONDUCTORS SHALL BE SOFT COPPER WITH THW/THWN 600 VOLT INSULATION CONDUIT SHALL BE RGS OR IMC FOR EXTERIOR RUNS, EMT FOR CONCEALED AND INTERIOR RUNS NOT EXPOSED TO WEATHER OR MECHANICAL DAMAGE MAY BE USED UNDERGROUND WHERE BURIED 18" AND PROVIDED WITH A GROUND WIRE AS PER NEC 250.
9. TYPE "NM" GROUNDED COPPER CABLE AS MANUFACTURE BY "ROMEX" OR APPROVED EQUAL MAY BE USED WHERE IN PARTITIONS AND INTERIOR SPACES.
10. GROUNDING SHALL COMPLY WITH NEC 250 AND SHALL CONSIST OF COPPER CONDUCTORS IN CONDUIT WITH BOLTED OR BRAZED CONNECTIONS TO COLD WATER PIPE RODS, AND ALL AVAILABLE ELECTRODES. (NEC: 250.50).
    ALL METALLIC RACEWAYS SHALL BE GROUNDED.
11. MECHANICAL EQUIPMENT DISCONNECT SWITCHES SHALL BE PROVIDED WITH DUAL ELEMENT FUSES SIZED AS NOTED PER MANUFACTURER'S RECOMMENDATION VERIFY BEFORE INSTALLATION.
12. MOTORS, TRANSFORMERS AND MECHANICAL EQUIPMENT SHALL BE PROVIDED WITH GREEN FIELD FLEXIBLE CONNECTIONS, WATERTIGHT WHERE EXPOSED TO MOISTURE AND WEATHER CONDITIONS.
13. IF NO RISER DIAGRAM IS SHOWN AS PART OF THESE PLANS; CONNECT TO EXISTING PANEL, RAISE CAPACITY OF PANEL & SERVICE IF REQUIRED.

F.E.M.A. NOTES:

1. ELECTRICAL OUTLETS (RECEPTACLES AND LIGHTING) BELOW BASE FLOOD ELEVATION SHALL BE INSTALLED AT HIGHEST PERMITTED ELEVATION AND SHALL BE INSTALLED ON (SEPARATE) INDEPENDENT CIRCUITS FROM THOSE IN THE HABITAT AREAS.
2. NO APPLIANCES OR APPLIANCES OUTLETS SHALL BE INSTALLED BELOW BASE FLOOD ELEVATION.
3. A/C COMPRESSORS SHALL BE INSTALLED ABOVE BASE FLOOD ELEVATION.
4. MAIN CIRCUIT BREAKER PANELS SHALL BE LOCATED ABOVE BASE FLOOD ELEVATION.
5. IT IS SUGGESTED THAT YOU CONFER WITH FLORIDA POWER & LIGHT TO LOCATE THE ELECTRIC METER TO COMPLY WITH FEDERAL EMERGENCY MANAGEMENT AGENCY REQUIREMENTS.

NOTE: PRIOR TO INSTALLATION OF ROUGH ELECTRICAL WIRING, CHECK NAME PLATE DATA OF EQUIPMENTS, TO OBTAIN CORRECT WIRE SIZES & OVER CURRENT PROTECTION

200 A. 1PH. 3W. 120/240 — FLUSH MOUNT

EXIST. 200 AMP PANEL ELECTRICAL SCHEDULE

	CCK	DESCRIPTION	TRIP	VOLTS	COND	WIRE	KW	REMARKS
EXIST. LOADS	1–2	EXIST. GEN. LGHTS/RECEPTS.	15	120	ROMEX	14	7.1	(2,374 SQ. FT.) (3W)
	3,5	DRYER	2/25	240		10	5.0	
	4,6	EXIST. TANK LESS W.H.	2/60	240		6	16.0	
	7	REFRIGIRATOR	20	120		12	1.0	
	8	DISHWASHER	20	120		12	1.2	
	9	GARBAGE DISPOSAL	20	120		12	1.5	
	10	WASHING MACHINE	20	120		12	1.5	
	11–13	SPARES						
	12–14	SPARES	TOTAL AT 200 AMP PANEL				33.3	
OTHER EXIST. AND NEW LOADS	16–18B	125 A. 1PH. 3W. EXIST. 125 A.MP 120/240 M.C.B. FOR SUB PANEL			CONDUIT SIZE	3#1		EXIST. INTERIOR MOUNTED
	1B–8B	NEW LIGHTING & RECEPTS.	15	120	1/2"	14	--	SEE ABOVE
	9B–11B	NEW A.H.U. #2	2/60	240		6	10.0	5.2 KW COOLING LOAD NOT COINCIDENT
	10B,12B	NEW C.U. #2	2/40	240	3/4"	8		
	13B,15B	EXT. LIGHTS & RECEPTS.	20	120	ROMEX	12	--	SEE ABOVE
	14B	GFCI BATHROOM OUTLETS	20	120		12	--	SEE ABOVE
	16B,18B	EXIST. SMALL APPLIANCES	20	120		12	3.0	
	17B,19B	EXIST. RANGE	2/50	240		6	12.0	
	20B,21B	SPARES	TOTAL AT 125 AMP PANEL				25.0	
						TOTAL=	58.3	

CONNECTED LOAD
58,300
-A/C =10,000
48,300

DEMAND CALCULATION

1st 10 KW @ 100%	10,000	
REMAINDER @ 40%	9,320	
A/C @ 100%	20,000	
DEMAND LOAD	39,320	VA
39,320 / 240 = 163.83 AMPS		

EXIST. 200 AMP MCB. & ELECTRICAL PANELS SUFFICES

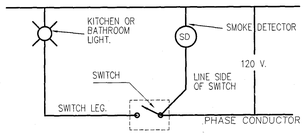

S/D NOTE:
SMOKE DETECTOR SHALL BE HARDWIRED (110 VOLT TYPE) TO A NON-SWITCHABLE KITCHEN OR BATHROOM LIGHTING CIRCUIT, WITH BATTERY BACK-UP AND SHALL NOT BE CONNECTED ONTO THE LOAD SIDE OF GROUND FAULT CIRCUIT INTERRUPTER. ALL SMOKE DETECTORS WITHIN EACH UNIT SHALL BE INTERCONNECTED.

(CSD) = CARBON MONOXIDE COMBO

ELECTRICAL LEGEND

	APPLIANCE OUTLET		RECESSED LIGHTING
	DUPLEX OUTLET	V	VAPOR PROOF LIGHT
	50 AMP OUTLET		CEILING MOUNT FIXTURE
	PHONE OUTLET BY OTHERS MAY VARY IN LOCATION		WALL MOUNT FIXTURE
GFI	GROUND FAULT INTERRUPTER		F UL-RATED FAN BOX/J BOX
WP	WATER PROOF	SD	110 V./BATT.SMOKE DETECTOR
$	SINGLE POLE SWITCH		EXIT LIGHT
3W	3 WAY SWITCH		ELECTRICAL PANEL
	DISCONNECT SWITCH		METER
	EXHAUST OR MOTOR	TV	CABLE/TV BY OTHERS MAY VARY IN LOCATION

R=RELOCATED W/EXIST. CIRCUIT
N=NEW
E=EXIST. TO REMAIN

NOTE: ALL CIRCUITING SHOWN IS PRIMARY FOR LOAD PURPOSES ONLY. ACTUAL CIRCUITING LAYOUT AND LIGHTING FIXTURE LOCATION & TYPES MAY VARY AS PER ELECTRICAL CONTRACTOR
NOTE: SEPARATE ELECTRICAL SUB PERMIT IS REQ'D. UNDER THIS MASTER PERMIT.

NOTE: 90% OF LAMPS MUST HIGH EFFICIENCY AND AT LEAST 45 LUMENS/W. OR NOT LESS THAN 65 LUMUNS/W. AS PER F.B.C. RE 404

NOTE: ALL SWITCHED LOCATIONS TO HAVE NEUTRAL GROUNDED CIRCUIT CONDUCTORS AS PER 4042(C) NEC

NOTE: ALL SWITCHES, OUTLETS & LIGHT FIXTURES SHOWN ARE OR MAY VARY IN ACTUAL FIELD CONDITIONS. THIS A DIAGRAM TO SHOW APPROXIMATE LOCATIONS FOR ALL NEW OR REPLACED ELECTRICAL FIXTURES, OUTLETS ETC.

NOTE: arc fault circuit interrupter

1. The overcurrent protection of the new circuits shall be arc fault circuit interrupter combination type circuit breakers.

A) Dwelling Units. All 120-volt, single-phase, 15- and 20-ampere branch circuits supplying outlets or devices installed in dwelling unit kitchens, family rooms, dining rooms, living rooms, parlors, libraries, dens, bedrooms, sunrooms, recreation rooms, closets, hallways, laundry areas, or similar rooms or areas shall be protected by any of the means described in 210.12(A)(1) through (6): *NO A.F.C.I. FOR OUTDOORS*

2. All receptacles 15A and 20A, 125V shall be tamper resistant, according to NEC 406.11.

NOTE: ALL OUTDOOR INSTALLATIONS SHALL COMPLY WITH NEC 110.11, 110.12, 110.26, 110.28, & 358.12

NOTE CODES IN EFFECT:
FBC 2020, 7th EDITION
ELECTRICAL & NEC 2017

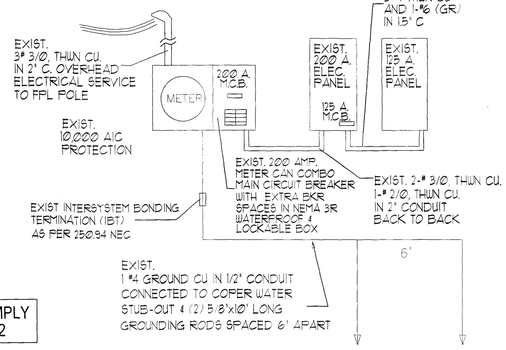

EXIST. RISER DIAGRAM

NOTE: TRADE CONTRACTOR IS RESPONSIBLE FOR ANY COST EFFECTIVE REVISIONS TO PLANS IF ORIGINAL DESIGN OF APPROVED PLANS ARE NOT FOLLOWED. A DIFFERENT METHOD IN DESIGN MAY BE USED AFTER CONSTRUCTION & PERMIT DOCUMENTS ARE ACTIVE IN FIELD, BUT AGAIN TRADE CONTRACTOR WILL BE RESPONSIBLE FOR ANY INCURRED COSTS DUE TO ANY REQUIRED REVISION WORK ON THE ORIGINAL APPROVED PLANS. ANY AND ALL CHANGES TO PLANS MUST BE APPROVED BY THE ENGINEER OR ARCHITECT OF RECORD & BUILDING DEPT. AND WILL BE BILLED ACCORDINGLY.

ELECTRICAL SCOPE OF WORK:
REMOVE ANY EXIST. ELECTRICAL IN AREAS BEING DEMOLISHED.
REMOVE & REPLACE ALL ELECTRICAL WIRING IN ALL AREAS.
EXIST. 200 AMP. M.C.B., & 200 & 125 AMP ELECTRICAL PANELS TO REMAIN.
PROVIDE NEW GFCI OUTLETS AT NEW BATH ROOMS AS SHOWN.
PROVIDE ALL NEW LIGHTING,SWITCHES & OUTLETS AT ALL NEW AREAS AS SHOWN.
SEE FLOOR PLAN. PROVIDE NEW SMOKE DETECTORS AT AS SHOWN.
EXIST. UNDERGROUND ELECTRICAL SERVICE TO REMAIN.

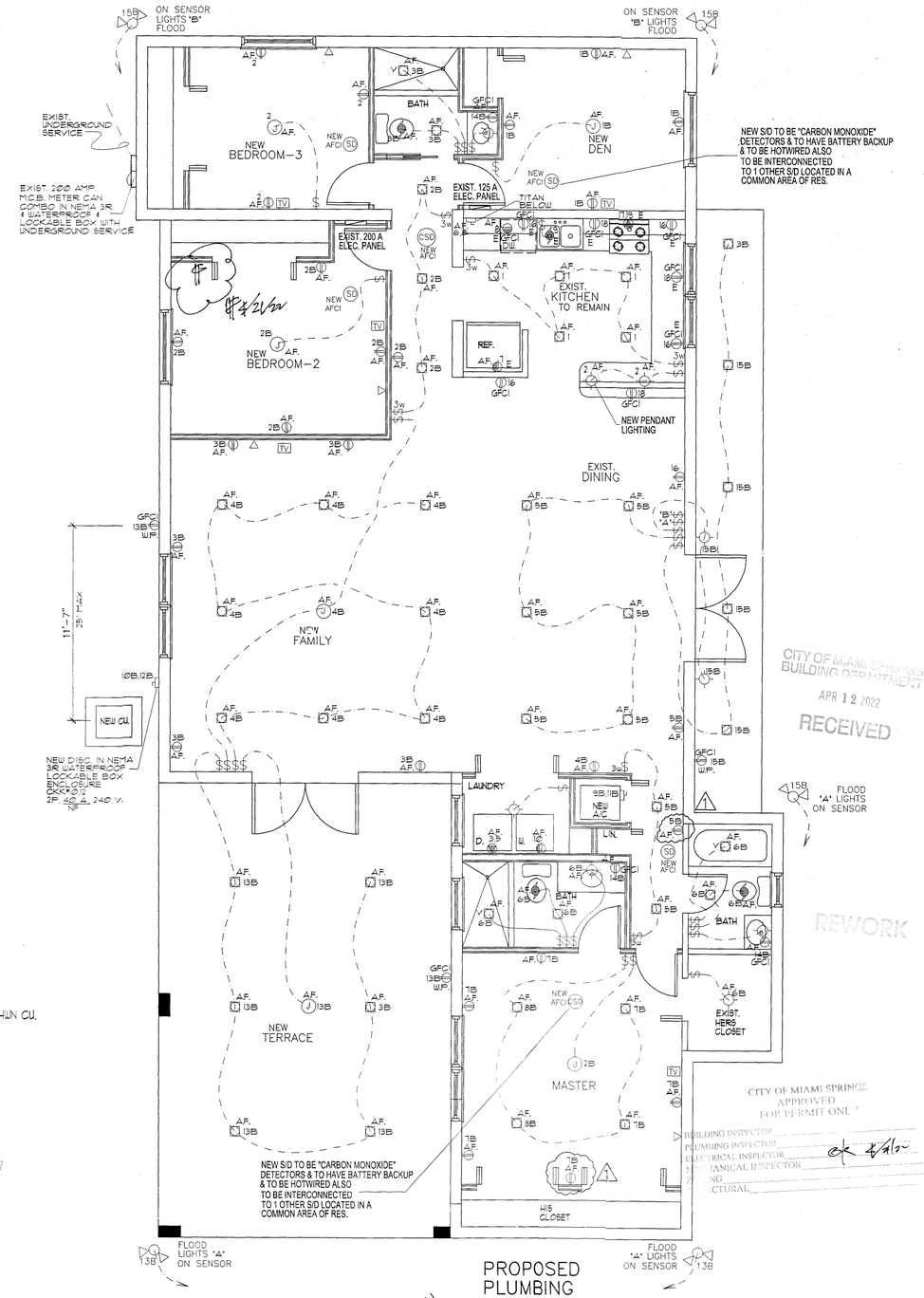

PROPOSED PLUMBING FLOOR PLAN
SCALE: 1/4"=1'-0"

CITY OF MIAMI SPRINGS
BUILDING DEPARTMENT
APR 12 2022
RECEIVED

REWORK

CITY OF MIAMI SPRINGS
APPROVED
FOR PERMIT ONLY
BUILDING INSPECTOR
PLUMBING INSPECTOR
ELECTRICAL INSPECTOR ok 4/26/22
MECHANICAL INSPECTOR
ROOFING
STRUCTURAL

NO.	DATE
1	3-28-22 REVISED TO SHOW ADDITIONAL OUTLETS

DESIGN
DRAWN
CHKD
APPRV
DATE

PROJECT NAME: ADDITION TO RESIDENCE FOR:
OWNER/PH: AMBAR PREVAL 786-587-7391
ADDRESS: 200 N. ESPLANADE DRIVE MIAMI SPRINGS, FLORIDA 33166
PROJECT ADD: SAME

Guillermo Ramon Gonzalez
9000 SW. 168th Avenue Miami Florida 33196
Registered Architect #13960
Ph:305-484-8171
Ph:786-237-5154 (assistant)

STATE OF FLORIDA — AR0013960 — REGISTERED ARCHITECT
Guillermo Ramon Gonzalez
R.A. 13960
STATE OF FLORIDA

101521

E-1

OTHER NOTES:

1. ALL CONSTRUCTION SHALL CONFORM TO THE FOLLOWING:
   A. THESE GENERAL NOTES AND DRAWINGS
   B. ALL APPLICABLE LOCAL AND STATE CODES, ORDINANCES AND REGULATIONS.
2. DIMENSIONS:
   A. ALL DIMENSIONS SHALL HAVE PREFERENCE OVER SCALE
   B. ALL DIMENSIONS ARE TO FACE OF STUD, OR FACE OF C.M.U. UNLESS OTHERWISE NOTED
   C. CEILING HEIGHT DIMENSIONS ARE FROM FINISH FLOOR SLAB, TO FINISH FACE OF CEILING JOIST.
3. WHEN SYMBOL IS ADJACENT TO A GIVEN DIMENSION, IT INDICATES THAT THE ACTUAL DIMENSION MIGHT VARY DUE TO EXISTING CONDITIONS.
4. VERIFY ALL DIMENSIONS AND ELEVATIONS PRIOR TO STARTING WORK AND INMEDIATELY NOTIFY THE ARCHITECT OF ANY DISCREPANCIES BETWEEN THE GIVEN DIMENSIONS AND THE ACTUAL DIMENSIONS FOR RESOLUTION BEFORE PROCEEDING WITH THE WORK.
5. WHERE NO CONSTRUCTION DETAILS ARE SHOWN OR NOTED FOR ANY PART OF WORK, SUCH DETAILS SHALL BE SIMILAR TO THOSE SHOWN FOR OTHER SIMILAR CONDITION AND SHALL BE USED SUBJECT TO REVIEW BY THE ARCHITECT (MEANING PAY ATTENTION TO WHAT YOU ARE DOING ON THE JOB SITE).
6. PROVIDE ACCESS PANELS TO ALL CONCEALED SPACES (I.E. ATTICTS, VOID SPACES, ETC.) AS REQUIRED BY THE BUILDING CODE AND LOCAL GOVERNING AUTHORITIES.
7. INSTALL ALL CABINETS, EQUIPMENT, AND FIXTURES UNDER THIS CONTRACT IN ACCORDANCE WITH THE APPLICABLE PORTIONS OF THE CONSTRUCTION DOCUMENTS.
8. ALL OPENINGS AT JOINTS ON WINDOWS, WALL SOLE PLATES, OPENINGS FOR UTILTY PIPING AND WIRING ETC. SHALL BE CAULKED AND SEALED.
9. ELECTRICAL AND COMMUNICATIONS SYSTEM RECEPTACLES ON WALLS SHALL BE MOUNTED NO LESS THAN 12 INCHES ABOVE THE FLOOR. THESE REQUIREMENTS DO NOT APPLY WHERE THE USE OF SPECIAL EQUIPMENT DICTATES OTHERWISE OR WHERE ELECTRICAL AND COMMUNICATIONS SYSTEMS RECEPTACLES ARE NOT NORMALLY INTENTED FOR USE BY BUILDING OCCUPANTS.
10. NEITHER THE OWNER OR THE ARCHITECT SHALL ENFORCE SAFETY MEASURES OR REGULATIONS. CONTRACTOR SHALL DESIGN, CONSTRUCT AND MAINTAIN ALL SAFETY DEVICES INCLUDING SHORING AND BRACING AND SHALL BE SOLELY RESPONSIBLE FOR CONFORMING TO ALL LOCAL, STATE AND FEDERAL SAFETY AND HEALTH REGULATIONS, STANDARDS AND LAWS.
11. The Architect or Engineer ASSUMES NO RESPONSIBILITY RELATING TO ANY HAZARDOUS OR TOXIC MATERIALS, INCLUDING ASBESTOS, AND ASSUMES NO RESPONSABILITY RELATING TO ITS EXISTENCE OR REMOVAL. THE OWNER SHALL TAKE ACTION FOR DIRECTLY CONTRACTING WITH A CONSULTANT OR SPECIALIST FOR SUCH, LICENSED BY THE STATE OF FLORIDA, SHOULD THOSE SERVICES BE REQUIRED ON THE PROJECT.
12. THESE PLANS ARE NOT TO BE REPRODUCED, CHANGED OR COPIED IN ANY FORM OR MANNER WHATSOEVER, NOR ARE THEY TO BE ASSIGNED TO A THIRD PARTY WITHOUT FIRST OBTAINING THE WRITTEN PERMISSION AND CONSENT OF THE ARCHITECT. IN THE EVENT OF UNAUTHORIZED USE OF THESE PLANS BY A THIRD PARTY, THE THIRD PARTY SHALL HOLD THE ARCHITECT HARMLESS AND PAY ALL ATTORNEY FEES AND COURT COSTS IN THE EVENT OF LITIGATION.
13. COORDINATE AND VERIFY WITH THE PLUMBING, MECHANICAL, AND ELECTRICAL TRADES, THE SIZES AND LOCATION OF ALL PIPING, DUSCTWORK, TRENCHES, SLEEVES, SPECIAL BOLTINGFOR EQUIPMENT CONDUITS, ETC. THROUGH AND UNDER FLOOR SLABS.
14. THE USE OF THE WORD "PROVIDE" IN CONNECTION WITH ANY ITEM SPECIFIED, IS INTENTED TO MEAN THAT SUCH SHALL BE FURNISHED, INSTALLED AND CONNECTED. WHERE SO REQUIRED, EXCEPT AS NOTED OTHERWISE.
15. SUBMIT ALL PERTINENT SHOP DRAWINGS TO THE ARCHITECT FOR REVIEW PRIOR TO FABRICATION AND INSTALLATION, ALLOWING SUFFICIENT TIME FOR REVIEW AND CORRECTIVE ACTION SHOULD IT BE REQUIRED. SUBMIT CATALOG CUTS OF ALL FIXTURES AND EQUIPMENT, AND SAMPLES OF ALL FINISHES SPECIFIED FOR APPROVAL PRIOR TO FABRICATION AND INSTALLATION. SUBMIT IN TRIPLICATE.
16. PRIOR TO SUBMITTAL OF BID, NOTIFY THE ARCHITECT IN WRITING OF SPECIFIED MATERIALS OR EQUIPMENT WHICH ARE EITHER UNAVAILABLE OR WILL CAUSE A DELAY IN THE CONSTRUCTION COMPLETION SCHEDULE INCLUDE SUFFICIENT INFORMATION FOR EVALUATION OF ANY PROPOSED ALTERNATES.
17. SUPPLY TEMPORARY ELECTRICAL POWER IF REQUIRED TO THE JOB SITE FOR USE BY ALL CONSTRUCTION TRADES PRIOR TO THE HOOK-UP OF SPECIFIED ELECTRICAL WORK. INCLUDE SUFFICIENT INFORMATION FOR EVALUATION OF ANY PROPOSED ALTERNATES. ALSO ANY UPGRADES ON ANY ITEMS OR MATERIALS SHOWN OR NOT SHOWN ON THESE PLANS ARE STRICTLY BETWEEN THE CONTRACTOR & THE OWNER.
18. PROVIDE AND MAINTAIN TEMPORARY BARRICADES, FENCES, ENCLOSURE WALLS, ETC. AS REQUIRED TO PROTECT THE PUBLIC DURING THE PERIOD OF CONSTRUCTION.
19. PREPARE ALL FLOORS TO RECEIVE FINISHES INDICATED. ANY SURFACE DEFECTS AND IRREGULARITIES SHALL BE FILLED AND LEVELED. FLOOR SURFACES ARE TO BE LEVEL, CLEAN AND SMOOTH, MEETING THE MANUFACTURER'S SPECIFICATIONS, PRIOR TO INSTALLATION OF ANY FLOOR COVERING.
20. MAINTAIN THE JOB SITE IN A CLEAN, ORDERLY CONDITION FREE OF DEBRIS AND LITTER. REMOVE ALL TRASH AND DEBRIS AS A RESULT OF THE OPERATION ON A REGULAR BASIS DURING AND INMEDIATELY UPON COMPLETION OF EACH PHASE OF WORK.
21. ALL MATERIALS STORED ON THE SITE SHALL BE PROPERLY STACKED AND PROTECTED TO PREVENT DAMAGE AND DETERIORATION UNTILL USED. FAILURE TO PROTECT MATERIALS MAY BE CAUSE FOR REJECTION OF WORK.
22. PROVIDE ALL NECESSARY BLOCKING, BACKING AND FRAMING FOR LIGHT FIXTURES, ELECTRICAL UNITS, H.V.A.C. EQUIPMENT AND ALL OTHER ITEMS REQUIRING SAME.
23. ALL PIPING AND CONDUIT SHALL BE IN WALLS OR FURRED SPACES, UNLESS NOTED OTHERWISE.
24. MECHANICAL UNITS SHALL BE ANCHORED PER HURRICANE CODE.
25. OUTLETS AND TELEPHONES BACK IN A WALL SHALL BE SEPARATED BY A MINIMUM OF ONE STUD SPACE.
26. CONTRACTOR IS TO MAKE EXACT DETERMINATION AS TO THE LOCATION OF ALL EXISTING UTILITIES. DO NOT BEGIN WORK UNTIL THIS HAS BEEN DONE. CONTRACTOR IS FULLY RESPONSIBLE FOR DAMAGE CAUSED BY FAILURY TO LOCATE AND PRESERVE UTILITIES.
27. BEFORE STARTING A SECTION OF WORK, THE CONTRACTOR AND/OR HIS SUBCONTRACTOR SHALL CAREFULLY EXAMINE ALL PREPARATORY WORK THAT HAS BEEN EXECUTED TO RECEIVE HIS WORK. HE SHALL CHECK CAREFULLY, BY WHATEVER MEANS ARE REQUIRED, TO INSURE THAT HIS WORK AND ADJACENT RELATED WORK WILL FINISH TO PROPER CONTOURS, PLANS, AND LEVELS. HE SHALL PROMPTLY NOTIFY THE GENERAL CONTRACTOR OF ANY DEFECTS OR IMPERFECTIONS IN PREPARATORY WORKS WHICH WILL IN ANY WAY AFFECT SATISFACTORY COMPLETION ON HIS WORK. ABSENCE OF SUCH NOTIFICATION WILL BE CONSTRUED AS AN ACCEPTANCE OF PREPARATORY WORK, AND LATER CLAIMS OF DEFECTS THEREIN WILL NOT BE RECOGNIZED.
28. UNDER NO CONDITION SHALL WORK PROCEED PRIOR TO PREPARATORY WORK HAVING BEEN COMAPACTED, CURED, DRIED, AND/OR OTHERWISE MADE SATISFACTORY TO RECEIVE SUCH RELATED WORK. RESPONSABILITY FOR TIMELY INSTALLATION OF ALL MATERIALS RESTS SOLELY WITH THE GENERAL CONTRACTOR WHO WILL MAINTAIN COORDINATION AT ALL TIMES.
29. DO NOT CUT-AND-PATCH STRUCTURAL WORK IN A MANNER RESULTING IN A REDUCTION OF LOAD CARRYING CAPACITY OR LOAD/DEFLECTION RATIO. DO NOT CUT-AND-PATCH OPERATIONAL ELEMENTS AND SAFETY-RELATED COMPONENTS IN A MANNER RESULTING IN A REDUCTION OF CAPACITIES TO PERFORM IN THE MANNER INTENDED OR RESULTING IN DECREASED OPERATIONAL LIFE, INCREASES MAINTENANCE, OR DECREASED SAFETY. DO NOT CUT-AND-PATCH WORK WCH IS EXPOSED ON THE EXTERIOR OR EXPOSED IN OCCUPIED SPACES OF THE BUILDING, IN A MANNER RESULTING IN A REDUCTION OF VISUAL QUALITIES, OR RESULTING IN SUBSTANCIAL EVIDENCE OF THE CUT-AND-PATCH WORK, AS JUDGED SOLELY BY THE STRUCTURAL ENGINEER. REMOVE AND REPLACE WORK JUDGED BY THE ARCHITECT TO BE UNSATISFACTORY.
30. ALL OPENING THROUGH FIRE-RATED WALLS SHALL BE PROTECTED WITH RATED ASSEMBLIES IN ACCORDANCE WITH THE REQUIRENTS OF STANDARDS BUILDING CODE AND N.F.P.A.
31. THE GENERAL CONTRACTOR SHALL BE RESPONSIBLE FOR ALL CONSTRUCTION SCHEDULING, AND SHALL BE RESPONSIBLE TO SEE THAT THE WORK IS DONE IN A TIMELY MANNER & ACCORDING TO PLANS .A PROGRESS SCHEDULE SHALL BE PREPARED AND SUBMITTED AS REQUIRED BY THE OWNER. THE ARCHITECT OR ENGINEER IS NOT RESPONSIBLE FOR ANY UNFORESEEN HIDDEN CONDITIONS DURING CONSTRUCTION. THESE WILL BE ADDRESSED AND BILLED SEPARATELY ACCORDING TO TYPE OF EXISTING CONDITION ON SITE.
32. THE GENERAL CONTRACTOR SHALL NOT ALLOW OR DIRECT MATERIALS OF ANY TRADE TO BE INSTALLED PREMATURELY, WHEN IT IS OBVIOUS THAT SUCH MATERIALS MAY BE DAMAGED BY SUBSEQUENT WORK OF OTHER TRADES. THE GENERAL CONTRACTOR SHALL TAKE SUCH STEPS AS ARE NECESSARY TO PROTECT SUCH COMPLETED WORK, EXCEPT WHEN SUCH WORK IS EXPRESSLY SPECIFIED TO BE PROTECTED BY THE SUB-CONTRACTOR INSTALLING THE WORK.
33. MISUNDERSTANDIGS OR MISCUMUNICATIONS BETWEEN THE GENERAL CONTRACTOR AND ALL SUBCONTRACTORS SHALL NOT BE THE RESPONSABILITY OF THE ARCHITECT AND OR ENGINEER, AND FURTHER THE ARCHITECT AND OR ENGINEER SHALL NOT SERVE AS REFEREE OR MIDDLE PERSON BETWEEN ANY MISUNDERSTANDIGS OR MISCUMUNICATIONS BETWEEN THE OWNER,GENERAL CONTRACTOR AND ALL SUBCONTRACTORS.

INTRUSION NOTES:

1. ALL LOCKS ON EXTERIOR DOORS SHALL BE CAPABLE OF RESISTING A FORCE OF 300 LBS. APPLIED IN ANY MOVABLE DIRECTION.
2. ALL SINGLE EXTERIOR SWING DOORS SHALL HAVE A LOCK TO BE KEY OPERATED FROM EXTERIOR WITH A MINIMUM OF 6000 POSSIBLE KEY CHANGES OR LOCKING COMBINATIONS IF KEY LOCK IS USED, THERE SHALL BE AN AUXILIARY SINGLE DEAD BOLT WITH HARDENED BOLT OR INSERTS.
3. THE ACTIVE LEAF OF PAIR OF EXTERIOR SWING DOORS SHALL HAVE SAME LOCKS AS REQUIRED FOR SINGLE EXTERIOR SWING DOORS. THE INACTIVE LEAF OF THESE PAIR OF DOORS SHALL HAVE MULTIPLE POINT LOCKS WITH 5/8" MINIMUM THROW BOLTS WITH INSERTS.
4. SLIDING GLASS DOORS SHALL BE PROVIDED WITH SLIDING DOOR DEAD BOLT OR A PIN NOT REMOVABLE OR OPERABLE FROM THE EXTERIOR AT THE JAMB, SILL, HEAD OR MEETING MULLIONS. THESE DOORS SHALL BE REINFORCED IN THE STRIKE AND LOCK AREA TO MAINTAIN BOLT STRENGTH EFFECTIVENESS IF NECESSARY AND SUCH DOORS SHALL HAVE NO SCREWS REMOVABLE FROM OUTSIDE WHICH WOULD FACILITATE READY ENTRY FROM OUTSIDE.
5. OVERHEAD DOORS SHALL BE PROVIDED WITH MULTIPLE POINT LOCKS OR BE LOCKED AT MORE THAN ONE POINT WITH HARDENED BOLTS OR BOLTS WITH INSERTS ENGAGING AT LEAST TWO OPPOSITE POINTS A MINIMUM OF 5/8". OTHER LOCKING DEVICES SHALL NOT BE REQUIRED WHERE SUCH DOORS ARE CONTROLLED AND LOCKED BY ELECTRIC POWER.
6. HINGES ON EXTERIOR OUT SWINGING DOORS SHALL HAVE NON-EXPOSED SCREWS AND NON PINS.
7. JAMBS OF ALL EXTERIOR OFFSET TYPE IN-SWINGING DOORS SHALL BE RABBET OR OF SIMILAR FABRICATION TO PREVENT DEFEATING THE PURPOSE OF THE STRIKE AND THE INTEGRITY OF LOCKS AND LATCHES.
8. SINGLE SWINGING EXTERIOR DOORS, IF WOOD, SHALL BE SOLID CORE OF NOT LESS THAN 1 3/8" THICK.
9. GLASS IN EXTERIOR DOORS SHALL COMPLY WITH THE AMERICAN NATIONAL STANDARDS INSTITUTES Z97.1.
10. VISION PANELS IN EXTERIOR DOORS, OTHER THAN GLAZING WITHIN 40" OF THE INSIDE LOCKING ACTIVATING DEVICE OF LOCKS AND SWINGING GLASS DOORS SHALL COMPLY WITH AMERICAN NATIONAL STANDARDS INSTITUTE, STANDARD Z97.1.
11. SLIDING GLASS DOORS AND WINDOWS SHALL NOT BE INSTALLED CLOSER THAN 40" TO THE INSIDE LOCK ACTIVATING DEVICE.
12. VENTS IN OVERHEAD GARAGE TYPE DOORS SHALL NOT BE INSTALLED CLOSER THAN 40" TO THE INSIDE LOCK ACTIVATING DEVICE.
13. SINGLE SWING EXTERIOR AND SWING DOORS CONNECTING LIVING AREAS WITH GARAGE AREAS SHALL BE SECURED WITH A LATCH AND A SINGLE DEAD BOLT WITH ONE INCH MINIMUM THROWS OR A COMBINATION OF DEAD LATCH AND DEAD BOLT SETS WITH LATCH THROW A MINIMUM OF 1/2" AND BOLTS HAVING A 1" MINIMUM THROW. DOORS SHALL BE A MINIMUM OF 1 3/8" THICK SOLID CORE.
14. FRONT MAIN ENTRANCE DOORS SHALL BE PROVIDED WITH A SCOPE OR VISION PANELS.

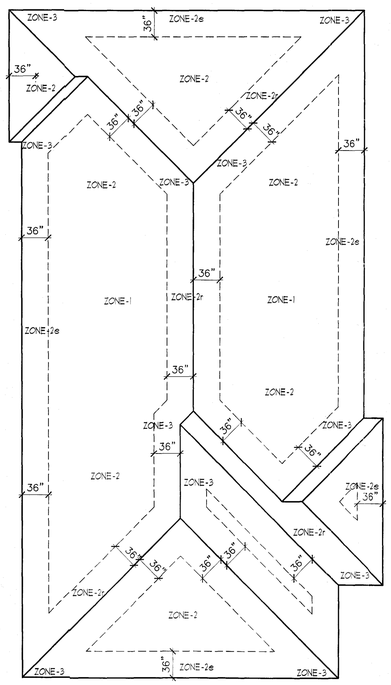

ROOF ZONE/DIAPHRAM REFERENCE PLAN

SCALE: 1/8"=1'-0"

AS PER ASCE 7-16

ROOF GROSS PRESSURE (ASD DESIGN)			
ZONE-1	16.29	-40.85	
ZONE-2e	16.29	-43.45	
ZONE-2r	16.29	-50.23	
ZONE-3	16.29	-43.45	

NOTE: ALL NEW ROOFING SYSTEM-MATERIALS TO HAVE A VALID N.O.A., PRODUCT APPROVALS & TO BE SUBMITTED FOR REVIEW AT TIME OF ROOFING PERMIT APPLICATION UNDER SEPARATE SUB PERMIT.

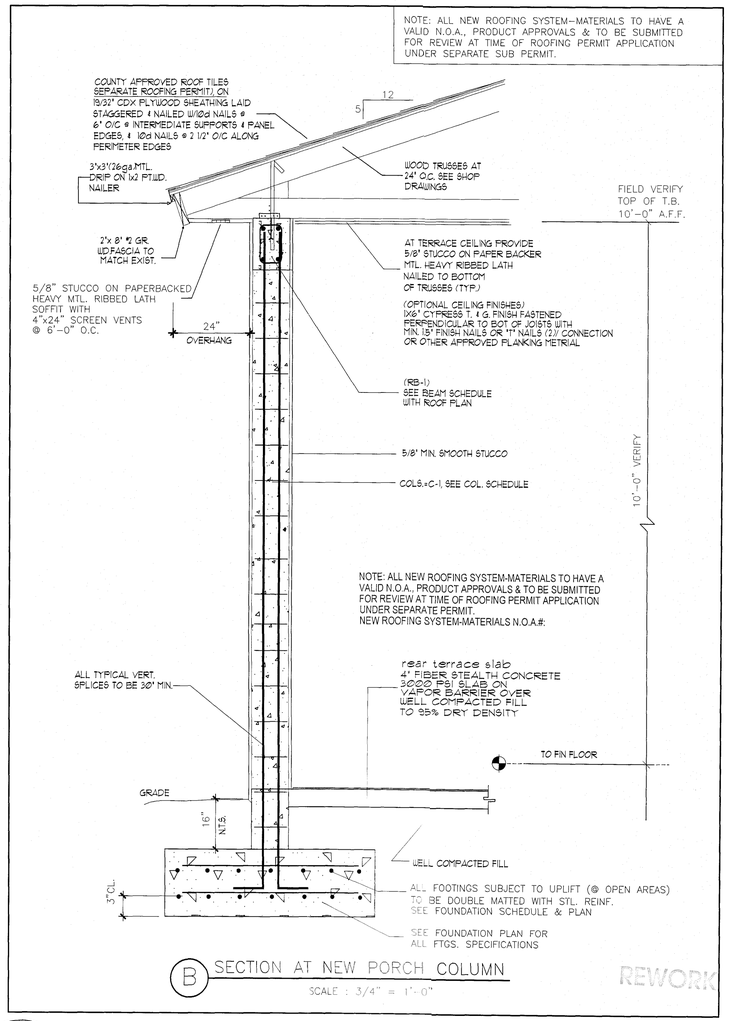

B SECTION AT NEW PORCH COLUMN

SCALE : 3/4" = 1'-0"

REWORK

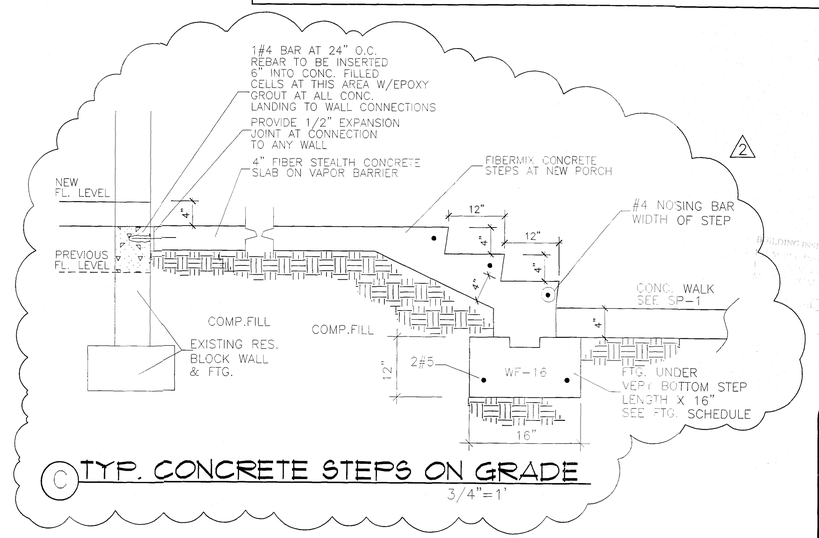

C TYP. CONCRETE STEPS ON GRADE

3/4"=1'

CITY OF MIAMI SPRINGS BUILDING DEPARTMENT
APR 12 2022
RECEIVED
CITY OF MIAMI SPRINGS APPROVED FOR PERMIT ONLY

NO.	DATE
1	3-23-22 REVISED TO COMPLY WITH CITY COMMENTS
2	
3	
4	

DESG | DRWN | CHKD | APRV | DATE

PROJECT NAME: ADDITION TO RESIDENCE FOR:
OWNER/PH: AMBAR PREVAL 786-587-7391
ADDRESS:200 N. ESPLANADE DRIVE MIAMI SPRINGS, FLORIDA 33166
PROJECT ADD: SAME

Guillermo Ramon Gonzalez
9000 SW. 168th Avenue Miami Florida 33196
Registered Architect #13960
Ph:305-484-8171
Ph:786-237-5154
(assistant)

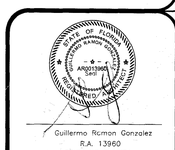

Guillermo Ramon Gonzalez
R.A. 13960
STATE OF FLORIDA

101521

A-6

OTHER NOTES:

1. ALL CONSTRUCTION SHALL CONFORM TO THE FOLLOWING:
   A. THESE GENERAL NOTES AND DRAWINGS
   B. ALL APPLICABLE LOCAL AND STATE CODES, ORDINANCES AND REGULATIONS.
2. DIMENSIONS:
   A. ALL DIMENSIONS SHALL HAVE PREFERENCE OVER SCALE
   B. ALL DIMENSIONS ARE TO FACE OF STUD, OR FACE OF C.M.U. UNLESS OTHERWISE NOTED
   C. CEILING HEIGHT DIMENSIONS ARE FROM FINISH FLOOR SLAB, TO FINISH FACE OF CEILING JOIST.
3. WHEN SYMBOL IS ADJACENT TO A GIVEN DIMENSION, IT INDICATES THAT THE ACTUAL DIMENSION MIGHT VARY DUE TO EXISTING CONDITIONS.
4. VERIFY ALL DIMENSIONS AND ELEVATIONS PRIOR TO STARTING WORK AND IMMEDIATELY NOTIFY THE ARCHITECT OF ANY DISCREPANCIES BETWEEN THE GIVEN DIMENSIONS AND THE ACTUAL DIMENSIONS FOR RESOLUTION BEFORE PROCEEDING WITH THE WORK.
5. WHERE NO CONSTRUCTION DETAILS ARE SHOWN OR NOTED FOR ANY PART OF WORK, SUCH DETAILS SHALL BE SIMILAR TO THOSE SHOWN FOR OTHER SIMILAR CONDITION AND SHALL BE USED SUBJECT TO REVIEW BY THE ARCHITECT (MEANING PAY ATTENTION TO WHAT YOU ARE DOING ON THE JOB SITE).
6. PROVIDE ACCESS PANELS TO ALL CONCEALED SPACES (I.E. ATTICTS, VOID SPACES, ETC.) AS REQUIRED BY THE BUILDING CODE AND LOCAL GOVERNING AUTHORITIES.
7. INSTALL ALL CABINETS, EQUIPMENT, AND FIXTURES UNDER THIS CONTRACT IN ACCORDANCE WITH THE APPLICABLE PORTIONS OF THE CONSTRUCTION DOCUMENTS.
8. ALL OPENINGS AT JOINTS ON WINDOWS, WALL SOLE PLATES, OPENINGS FOR UTILTY PIPING AND WIRING ETC. SHALL BE CAULKED AND SEALED.
9. ELECTRICAL AND COMMUNICATIONS SYSTEM RECEPTACLES ON WALLS SHALL BE MOUNTED NO LESS THAN 12 INCHES ABOVE THE FLOOR. THESE REQUIREMENTS DO NOT APPLY WHERE THE USE OF SPECIAL EQUIPMENT DICTATES OTHERWISE OR WHERE ELECTRICAL AND COMMUNICATIONS SYSTEMS RECEPTACLES ARE NOT NORMALLY INTENTED FOR USE BY BUILDING OCCUPANTS.
10. NEITHER THE OWNER OR THE ARCHITECT SHALL ENFORCE SAFETY MEASURES OR REGULATIONS. CONTRACTOR SHALL DESIGN, CONSTRUCT AND MAINTAIN ALL SAFETY DEVICES INCLUDING SHORING AND BRACING AND SHALL BE SOLELY RESPONSIBLE FOR CONFORMING TO ALL LOCAL, STATE AND FEDERAL SAFETY AND HEALTH REGULATIONS, STANDARDS AND LAWS.
11. The Architect or Engineer ASSUMES NO RESPONSIBILITY RELATING TO ANY HAZARDOUS OR TOXIC MATERIALS, INCLUDING ASBESTOS, AND ASSUMES NO RESPONSABILITY RELATING TO ITS EXISTENCE OR REMOVAL. THE OWNER SHALL TAKE ACTION FOR DIRECTLY CONTRACTING WITH A CONSULTANT OR SPECIALIST FOR SUCH, LICENSED BY THE STATE OF FLORIDA, SHOULD THOSE SERVICES BE REQUIRED ON THE PROJECT.
12. THESE PLANS ARE NOT TO BE REPRODUCED, CHANGED OR COPIED IN ANY FORM OR MANNER WHATSOEVER, NOR ARE THEY TO BE ASSIGNED TO A THIRD PARTY WITHOUT FIRST OBTAINING THE WRITTEN PERMISSION AND CONSENT OF THE ARCHITECT. IN THE EVENT OF UNAUTHORIZED USE OF THESE PLANS BY A THIRD PARTY, THE THIRD PARTY SHALL HOLD THE ARCHITECT HARMLESS AND PAY ALL ATTORNEY FEES AND COURT COSTS IN THE EVENT OF LITIGATION.
13. COORDINATE AND VERIFY WITH THE PLUMBING, MECHANICAL, AND ELECTRICAL TRADES, THE SIZES AND LOCATION OF ALL PIPING, DUSCTWORK, TRENCHES, SLEEVES, SPECIAL BOLTINGFOR EQUIPMENT CONDUITS, ETC. THROUGH AND UNDER FLOOR SLABS.
14. THE USE OF THE WORD "PROVIDE" IN CONNECTION WITH ANY ITEM SPECIFIED, IS INTENTED TO MEAN THAT SUCH SHALL BE FURNISHED, INSTALLED AND CONNECTED. WHERE SO REQUIRED, EXCEPT AS NOTED OTHERWISE.
15. SUBMIT ALL PERTINENT SHOP DRAWINGS TO THE ARCHITECT FOR REVIEW PRIOR TO FABRICATION AND INSTALLATION, ALLOWING SUFFICIENT TIME FOR REVIEW AND CORRECTIVE ACTION SHOULD IT BE REQUIRED. SUBMIT CATALOG CUTS OF ALL FIXTURES AND EQUIPMENT, AND SAMPLES OF ALL FINISHES SPECIFIED FOR APPROVAL PRIOR TO FABRICATION AND INSTALLATION. SUBMIT IN TRIPLICATE.
16. PRIOR TO SUBMITTAL OF BID, NOTIFY THE ARCHITECT IN WRITING OF SPECIFIED MATERIALS OR EQUIPMENT WHICH ARE EITHER UNAVAILABLE OR WILL CAUSE A DELAY IN THE CONSTRUCTION COMPLETION SCHEDULE INCLUDE SUFFICIENT INFORMATION FOR EVALUATION OF ANY PROPOSED ALTERNATES.
17. SUPPLY TEMPORARY ELECTRICAL POWER IF REQUIRED TO THE JOB SITE FOR USE BY ALL CONSTRUCTION TRADES PRIOR TO THE HOOK-UP OF SPECIFIED ELECTRICAL WORK. INCLUDE SUFFICIENT INFORMATION FOR EVALUATION OF ANY PROPOSED ALTERNATES. ALSO ANY UPGRADES ON ANY ITEMS OR MATERIALS SHOWN OR NOT SHOWN ON THESE PLANS ARE STRICTLY BETWEEN THE CONTRACTOR & THE OWNER.
18. PROVIDE AND MAINTAIN TEMPORARY BARRICADES, FENCES, ENCLOSURE WALLS, ETC. AS REQUIRED TO PROTECT THE PUBLIC DURING THE PERIOD OF CONSTRUCTION.
19. PREPARE ALL FLOORS TO RECEIVE FINISHES INDICATED. ANY SURFACE DEFECTS AND IRREGULARITIES SHALL BE FILLED AND LEVELED. FLOOR SURFACES ARE TO BE LEVEL, CLEAN AND SMOOTH, MEETING THE MANUFACTURER'S SPECIFICATIONS, PRIOR TO INSTALLATION OF ANY FLOOR COVERING.
20. MAINTAIN THE JOB SITE IN A CLEAN, ORDERLY CONDITION FREE OF DEBRIS AND LITTER. REMOVE ALL TRASH AND DEBRIS AS A RESULT OF THE OPERATION ON A REGULAR BASIS DURING AND INMEDIATELY UPON COMPLETION OF EACH PHASE OF WORK.
21. ALL MATERIALS STORED ON THE SITE SHALL BE PROPERLY STACKED AND PROTECTED TO PREVENT DAMAGE AND DETERIORATION UNTILL USED. FAILURE TO PROTECT MATERIALS MAY BE CAUSE FOR REJECTION OF WORK.
22. PROVIDE ALL NECESSARY BLOCKING, BACKING AND FRAMING FOR LIGHT FIXTURES, ELECTRICAL UNITS, H.V.A.C. EQUIPMENT AND ALL OTHER ITEMS REQUIRING SAME.
23. ALL PIPING AND CONDUIT SHALL BE IN WALLS OR FURRED SPACES, UNLESS NOTED OTHERWISE.
24. MECHANICAL UNITS SHALL BE ANCHORED PER HURRICANE CODE.
25. OUTLETS AND TELEPHONES BACK IN A WALL SHALL BE SEPARATED BY A MINIMUM OF ONE STUD SPACE.
26. CONTRACTOR IS TO MAKE EXACT DETERMINATION AS TO THE LOCATION OF ALL EXISTING UTILITIES. DO NOT BEGIN WORK UNTIL THIS HAS BEEN DONE. CONTRACTOR IS FULLY RESPONSIBLE FOR DAMAGE CAUSED BY FAILURY TO LOCATE AND PRESERVE UTILITIES.
27. BEFORE STARTING A SECTION OF WORK, THE CONTRACTOR AND/OR HIS SUBCONTRACTOR SHALL CAREFULLY EXAMINE ALL PREPARATORY WORK THAT HAS BEEN EXECUTED TO RECEIVE HIS WORK. HE SHALL CHECK CAREFULLY, BY WHATEVER MEANS ARE REQUIRED, TO INSURE THAT HIS WORK AND ADJACENT RELATED WORK WILL FINISH TO PROPER CONTOURS, PLANS, AND LEVELS. HE SHALL PROMPTLY NOTIFY THE GENERAL CONTRACTOR OF ANY DEFECTS OR IMPERFECTIONS IN PREPARATORY WORKS WHICH WILL IN ANY WAY AFFECT SATISFACTORY COMPLETION ON HIS WORK. ABSENCE OF SUCH NOTIFICATION WILL BE CONSTRUED AS AN ACCEPTANCE OF PREPARATORY WORK, AND LATER CLAIMS OF DEFECTS THEREIN WILL NOT BE RECOGNIZED.
28. UNDER NO CONDITION SHALL WORK PROCEED PRIOR TO PREPARATORY WORK HAVING BEEN COMAPACTED, CURED, DRIED, AND/OR OTHERWISE MADE SATISFACTORY TO RECEIVE SUCH RELATED WORK. RESPONSABILITY FOR TIMELY INSTALLATION OF ALL MATERIALS RESTS SOLELY WITH THE GENERAL CONTRACTOR WHO WILL MAINTAIN COORDINATION AT ALL TIMES.
29. DO NOT CUT-AND-PATCH STRUCTURAL WORK IN A MANNER RESULTING IN A REDUCTION OF LOAD CARRYING CAPACITY OR LOAD/DEFLECTION RATIO. DO NOT CUT-AND-PATCH OPERATIONAL ELEMENTS AND SAFETY-RELATED COMPONENTS IN A MANNER RESULTING IN A REDUCTION OF CAPACITIES TO PERFORM IN THE MANNER INTENDED OR RESULTING IN DECREASED OPERATIONAL LIFE, INCREASES MAINTENANCE, OR DECREASED SAFETY. DO NOT CUT-AND-PATCH WORK WICH IS EXPOSED ON THE EXTERIOR OR EXPOSED IN OCCUPIED SPACES OF THE BUILDING, IN A MANNER RESULTING IN A REDUCTION OF VISUAL QUALITIES, OR RESULTING IN SUBSTANCIAL EVIDENCE OF THE CUT-AND-PATCH WORK, AS JUDGED SOLELY BY THE STRUCTURAL ENGINEER. REMOVE AND REPLACE WORK JUDGED BY THE ARCHITECT TO BE UNSATISFACTORY.
30. ALL OPENING THROUGH FIRE-RATED WALLS SHALL BE PROTECTED WITH RATED ASSEMBLIES IN ACCORDANCE WITH THE REQUIRENTS OF STANDARDS BUILDING CODE AND N.F.P.A.
31. THE GENERAL CONTRACTOR SHALL BE RESPONSIBLE FOR ALL CONSTRUCTION SCHEDULING, AND SHALL BE RESPONSIBLE TO SEE THAT THE WORK IS DONE IN A TIMELY MANNER & ACCORDING TO PLANS A PROGRESS SCHEDULE SHALL BE PREPARED AND SUBMITTED AS REQUIRED BY THE OWNER. THE ARCHITECT OR ENGINEER IS NOT RESPONSIBLE FOR ANY UNFORESEEN HIDDEN CONDITIONS DURING CONSTRUCTION. THESE WILL BE ADDRESSED AND BILLED SEPARATELY ACCORDING TO TYPE OF EXISTING CONDITION ON SITE.
32. THE GENERAL CONTRACTOR SHALL NOT ALLOW OR DIRECT MATERIALS OF ANY TRADE TO BE INSTALLED PREMATURELY, WHEN IT IS OBVIOUS THAT SUCH MATERIALS MAY BE DAMAGED BY SUBSEQUENT WORK OF OTHER TRADES. THE GENERAL CONTRACTOR SHALL TAKE SUCH STEPS AS ARE NECESSARY TO PROTECT SUCH COMPLETED WORK, EXCEPT WHEN SUCH WORK IS EXPRESSLY SPECIFIED TO BE PROTECTED BY THE SUB-CONTRACTOR INSTALLING THE WORK.
33. MISUNDERSTANDIGS OR MISCUMUNICATIONS BETWEEN THE GENERAL CONTRACTOR AND ALL SUBCONTRACTORS SHALL NOT BE THE RESPONSABILITY OF THE ARCHITECT AND OR ENGINEER, AND FURTHER THE ARCHITECT AND OR ENGINEER SHALL NOT SERVE AS REFEREE OR MIDDLE PERSON BETWEEN ANY MISUNDERSTANDIGS OR MISCUMUNICATIONS BETWEEN THE OWNER,GENERAL CONTRACTOR AND ALL SUBCONTRACTORS.

INTRUSION NOTES:

1. ALL LOCKS ON EXTERIOR DOORS SHALL BE CAPABLE OF RESISTING A FORCE OF 300 LBS. APPLIED IN ANY MOVABLE DIRECTION.
2. ALL SINGLE EXTERIOR SWING DOORS SHALL HAVE A LOCK TO BE KEY OPERATED FROM EXTERIOR WITH A MINIMUM OF 6000 POSSIBLE KEY CHANGES OR LOCKING COMBINATIONS IF KEY LOCK IS USED, THERE SHALL BE AN AUXILIARY SINGLE DEAD BOLT WITH HARDENED BOLT OR INSERTS.
3. THE ACTIVE LEAF OF PAIR OF EXTERIOR SWING DOORS SHALL HAVE SAME LOCKS AS REQUIRED FOR SINGLE EXTERIOR SWING DOORS. THE INACTIVE LEAF OF THESE PAIR OF DOORS SHALL HAVE MULTIPLE POINT LOCKS WITH 5/8" MINIMUM THROW BOLTS WITH INSERTS.
4. SLIDING GLASS DOORS SHALL BE PROVIDED WITH SLIDING DOOR DEAD BOLT OR A PIN NOT REMOVABLE OR OPERABLE FROM THE EXTERIOR AT THE JAMB, SILL, HEAD OR MEETING MULLIONS. THESE DOORS SHALL BE REINFORCED IN THE STRIKE AND LOCK AREA TO MAINTAIN BOLT STRENGTH EFFECTIVENESS IF NECESSARY AND SUCH DOORS SHALL HAVE NO SCREWS REMOVABLE FROM OUTSIDE WHICH WOULD FACILITATE READY ENTRY FROM OUTSIDE.
5. OVERHEAD DOORS SHALL BE PROVIDED WITH MULTIPLE POINT LOCKS OR BE LOCKED AT MORE THAN ONE POINT WITH HARDENED BOLTS OR BOLTS WITH INSERTS ENGAGING AT LEAST TWO OPPOSITE POINTS A MINIMUM OF 5/8". OTHER LOCKING DEVICES SHALL NOT BE REQUIRED WHERE SUCH DOORS ARE CONTROLLED AND LOCKED BY ELECTRIC POWER.
6. HINGES ON EXTERIOR OUT SWINGING DOORS SHALL HAVE NON-EXPOSED SCREWS AND NON PINS.
7. JAMBS OF ALL EXTERIOR OFFSET TYPE IN-SWINGING DOORS SHALL BE RABBET OR OF SIMILAR FABRICATION TO PREVENT DEFEATING THE PURPOSE OF THE STRIKE AND THE INTEGRITY OF LOCKS AND LATCHES.
8. SINGLE SWINGING EXTERIOR DOORS, IF WOOD, SHALL BE SOLID CORE OF NOT LESS THAN 1 3/8" THICK.
9. GLASS IN EXTERIOR DOORS SHALL COMPLY WITH THE AMERICAN NATIONAL STANDARDS INSTITUTES Z97.1.
10. VISION PANELS IN EXTERIOR DOORS, OTHER THAN GLAZING WITHIN 40" OF THE INSIDE LOCKING ACTIVATING DEVICE OF LOCKS AND SWINGING GLASS DOORS SHALL COMPLY WITH AMERICAN NATIONAL STANDARDS INSTITUTE, STANDARD Z97.1.
11. SLIDING GLASS DOORS AND WINDOWS SHALL NOT BE INSTALLED CLOSER THAN 40" TO THE INSIDE LOCK ACTIVATING DEVICE.
12. VENTS IN OVERHEAD GARAGE TYPE DOORS SHALL NOT BE INSTALLED CLOSER THAN 40" TO THE INSIDE LOCK ACTIVATING DEVICE.
13. SINGLE SWING EXTERIOR AND SWING DOORS CONNECTING LIVING AREAS WITH GARAGE AREAS SHALL BE SECURED WITH A LATCH AND A SINGLE DEAD BOLT WITH ONE INCH MINIMUM THROWS OR A COMBINATION OF DEAD LATCH AND DEAD BOLT SETS WITH LATCH THROW A MINIMUM OF 1/2" AND BOLTS HAVING A 1" MINIMUM THROW. DOORS SHALL BE A MINIMUM OF 1 3/8" THICK SOLID CORE.
14. FRONT MAIN ENTRANCE DOORS SHALL BE PROVIDED WITH A SCOPE OR VISION PANELS.

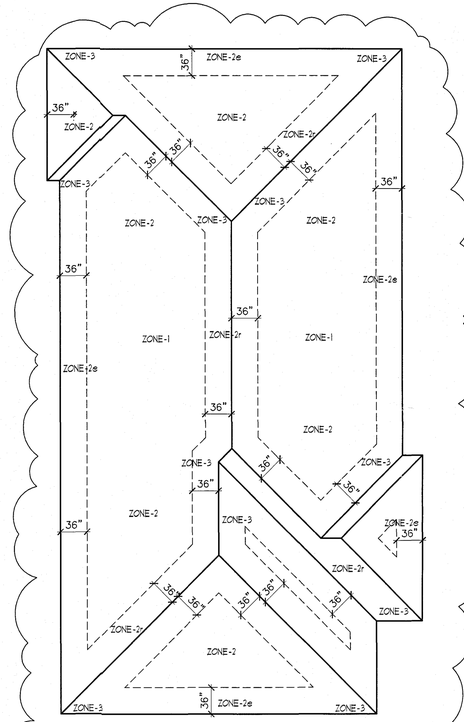

ROOF ZONE/DIAPHRAM REFERENCE PLAN

SCALE:1/8"=1'-0"

AS PER ASCE 7-16

ROOF GROSS PRESSURE (ASD DESIGN)			
ZONE-1	+16.29	-40.05	
ZONE-2e	+16.29	-43.45	
ZONE-2r	+16.29	-50.23	
ZONE-3	+16.29	-43.45	

NOTE: ALL NEW ROOFING SYSTEM-MATERIALS TO HAVE A VALID N.O.A., PRODUCT APPROVALS & TO BE SUBMITTED FOR REVIEW AT TIME OF ROOFING PERMIT APPLICATION UNDER SEPARATE SUB PERMIT.

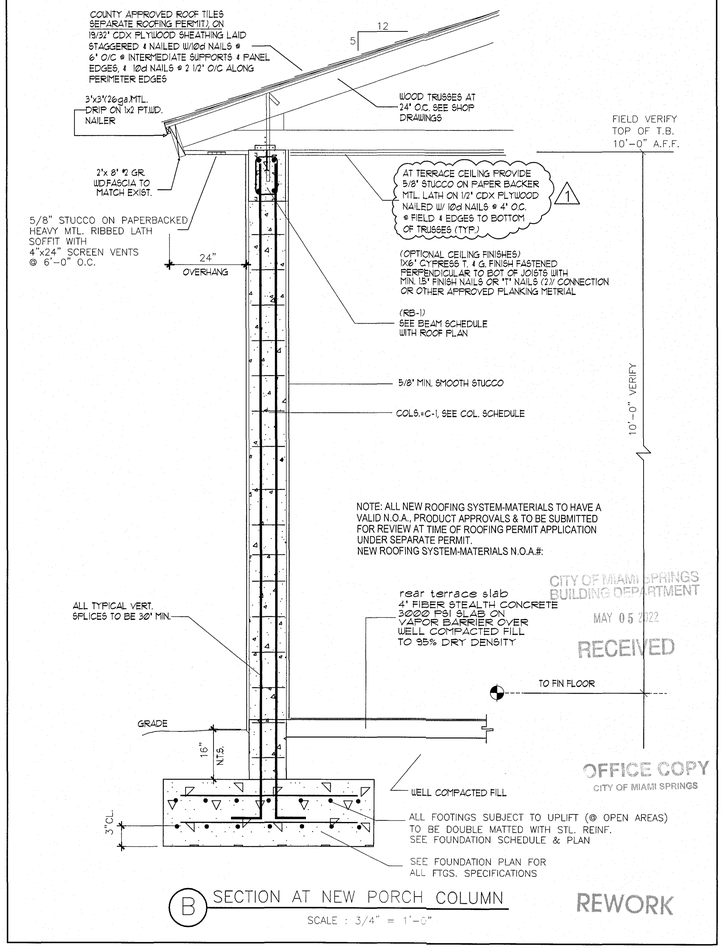

B SECTION AT NEW PORCH COLUMN

SCALE : 3/4" = 1'-0"

REWORK

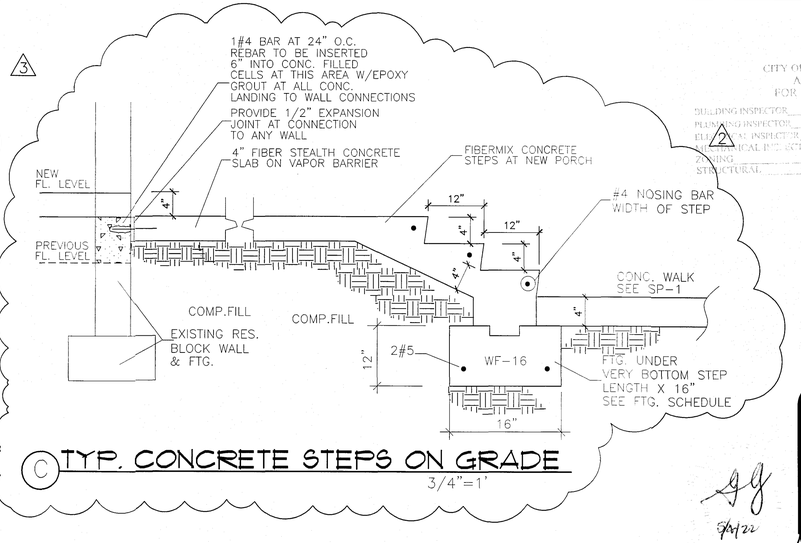

C TYP. CONCRETE STEPS ON GRADE

3/4"=1'

CITY OF MIAMI SPRINGS APPROVED FOR PERMIT ONLY

BUILDING INSPECTOR
PLUMBING INSPECTOR
ELECTRICAL INSPECTOR
MECHANICAL INSPECTOR
ZONING
STRUCTURAL

5/9/22

STATE OF FLORIDA — GUILLERMO RAMON GONZALEZ — AR0013960 — REGISTERED ARCHITECT

Guillermo Ramon Gonzalez
R.A. 13960
STATE OF FLORIDA

NO.	DATE
1	3-23-22 REVISED TO COMPLY WITH CITY COMMENTS
2	3-23-22 REVISED TO COMPLY WITH CITY COMMENTS
3	4-29-22 REVISED TO COMPLY WITH structural COMMENTS
•	•

DESG • DRWN • CHKD • APPV • DATE •

PROJECT NAME: ADDITION TO RESIDENCE FOR:
OWNER/PH: AMBAR PREVAL 786-587-7391
ADDRESS:200 N. ESPLANADE DRIVE MIAMI SPRINGS, FLORIDA 33166
PROJECT ADD: SAME

Guillermo Ramon Gonzalez
9000 SW. 168th Avenue Miami Florida 33196 Ph:305-484-8171
Registered Architect #13960 Ph:786-237-5154 (assistant)

101521

A-6

OTHER NOTES:

1. ALL CONSTRUCTION SHALL CONFORM TO THE FOLLOWING:
   A. THESE GENERAL NOTES AND DRAWINGS
   B. ALL APPLICABLE LOCAL AND STATE CODES, ORDINANCES AND REGULATIONS.

2. DIMENSIONS:
   A. ALL DIMENSIONS SHALL HAVE PREFERENCE OVER SCALE
   B. ALL DIMENSIONS ARE TO FACE OF STUD, OR FACE OF C.M.U. UNLESS OTHERWISE NOTED
   C. CEILING HEIGHT DIMENSIONS ARE FROM FINISH FLOOR SLAB, TO FINISH FACE OF CEILING JOIST.

3. WHEN SYMBOL IS ADJACENT TO A GIVEN DIMENSION, IT INDICATES THAT THE ACTUAL DIMENSION MIGHT VARY DUE TO EXISTING CONDITIONS.

4. VERIFY ALL DIMENSIONS AND ELEVATIONS PRIOR TO STARTING WORK AND INMEDIATELY NOTIFY THE ARCHITECT OF ANY DISCREPANCIES BETWEEN THE GIVEN DIMENSIONS AND THE ACTUAL DIMENSIONS FOR RESOLUTION BEFORE PROCEEDING WITH THE WORK.

5. WHERE NO CONSTRUCTION DETAILS ARE SHOWN OR NOTED FOR ANY PART OF WORK, SUCH DETAILS SHALL BE SIMILAR TO THOSE SHOWN FOR OTHER SIMILAR CONDITION AND SHALL BE USED SUBJECT TO REVIEW BY THE ARCHITECT (MEANING PAY ATTENTION TO WHAT YOU ARE DOING ON THE JOB SITE).

6. PROVIDE ACCESS PANELS TO ALL CONCEALED SPACES (I.E. ATTICTS, VOID SPACES, ETC.) AS REQUIRED BY THE BUILDING CODE AND LOCAL GOVERNING AUTHORITIES.

7. INSTALL ALL CABINETS, EQUIPMENT, AND FIXTURES UNDER THIS CONTRACT IN ACCORDANCE WITH THE APPLICABLE PORTIONS OF THE CONSTRUCTION DOCUMENTS.

8. ALL OPENINGS AT JOINTS ON WINDOWS, WALL SOLE PLATES, OPENINGS FOR UTILTY PIPING AND WIRING ETC. SHALL BE CAULKED AND SEALED.

9. ELECTRICAL AND COMMUNICATIONS SYSTEM RECEPTACLES ON WALLS SHALL BE MOUNTED NO LESS THAN 12 INCHES ABOVE THE FLOOR. THESE REQUIREMENTS DO NOT APPLY WHERE THE USE OF SPECIAL EQUIPMENT DICTATES OTHERWISE OR WHERE ELECTRICAL AND COMMUNICATIONS SYSTEMS RECEPTACLES ARE NOT NORMALLY INTENTED FOR USE BY BUILDING OCCUPANTS.

10. NEITHER THE OWNER OR THE ARCHITECT SHALL ENFORCE SAFETY MEASURES OR REGULATIONS. CONTRACTOR SHALL DESIGN, CONSTRUCT AND MAINTAIN ALL SAFETY DEVICES INCLUDING SHORING AND BRACING AND SHALL BE SOLELY RESPONSIBLE FOR CONFORMING TO ALL LOCAL, STATE AND FEDERAL SAFETY AND HEALTH REGULATIONS, STANDARDS AND LAWS.

11. The Architect or Engineer ASSUMES NO RESPONSIBILITY RELATING TO ANY HAZARDOUS OR TOXIC MATERIALS, INCLUDING ASBESTOS, AND ASSUMES NO RESPONSABILITY RELATING TO ITS EXISTENCE OR REMOVAL. THE OWNER SHALL TAKE ACTION FOR DIRECTLY CONTRACTING WITH A CONSULTANT OR SPECIALIST FOR SUCH, LICENSED BY THE STATE OF FLORIDA, SHOULD THOSE SERVICES BE REQUIRED ON THE PROJECT.

12. THESE PLANS ARE NOT TO BE REPRODUCED, CHANGED OR COPIED IN ANY FORM OR MANNER WHATSOEVER, NOR ARE THEY TO BE ASSIGNED TO A THIRD PARTY WITHOUT FIRST OBTAINING THE WRITTEN PERMISSION AND CONSENT OF THE ARCHITECT. IN THE EVENT OF UNAUTHORIZED USE OF THESE PLANS BY A THIRD PARTY, THE THIRD PARTY SHALL HOLD THE ARCHITECT HARMLESS AND PAY ALL ATTORNEY FEES AND COURT COSTS IN THE EVENT OF LITIGATION.

13. COORDINATE AND VERIFY WITH THE PLUMBING, MECHANICAL, AND ELECTRICAL TRADES, THE SIZES AND LOCATION OF ALL PIPING, DUSCTWORK, TRENCHES, SLEEVES, SPECIAL BOLTINGFOR EQUIPMENT CONDUITS, ETC. THROUGH AND UNDER FLOOR SLABS.

14. THE USE OF THE WORD "PROVIDE" IN CONNECTION WITH ANY ITEM SPECIFIED, IS INTENTED TO MEAN THAT SUCH SHALL BE FURNISHED, INSTALLED AND CONNECTED. WHERE SO REQUIRED, EXCEPT AS NOTED OTHERWISE.

15. SUBMIT ALL PERTINENT SHOP DRAWINGS TO THE ARCHITECT FOR REVIEW PRIOR TO FABRICATION AND INSTALLATION, ALLOWING SUFFICIENT TIME FOR REVIEW AND CORRECTIVE ACTION SHOULD IT BE REQUIRED. SUBMIT CATALOG CUTS OF ALL FIXTURES AND EQUIPMENT, AND SAMPLES OF ALL FINISHES SPECIFIED FOR APPROVAL PRIOR TO FABRICATION AND INSTALLATION. SUBMIT IN TRIPLICATE.

16. PRIOR TO SUBMITTAL OF BID, NOTIFY THE ARCHITECT IN WRITING OF SPECIFIED MATERIALS OR EQUIPMENT WHICH ARE EITHER UNAVAILABLE OR WILL CAUSE A DELAY IN THE CONSTRUCTION COMPLETION SCHEDULE INCLUDE SUFFICIENT INFORMATION FOR EVALUATION OF ANY PROPOSED ALTERNATES.

17. SUPPLY TEMPORARY ELECTRICAL POWER IF REQUIRED TO THE JOB SITE FOR USE BY ALL CONSTRUCTION TRADES PRIOR TO THE HOOK-UP OF SPECIFIED ELECTRICAL WORK.
INCLUDE SUFFICIENT INFORMATION FOR EVALUATION OF ANY PROPOSED ALTERNATES.
ALSO ANY UPGRADES ON ANY ITEMS OR MATERIALS SHOWN OR NOT SHOWN ON THESE PLANS ARE STRICTLY BETWEEN THE CONTRACTOR & THE OWNER.

18. PROVIDE AND MAINTAIN TEMPORARY BARRICADES, FENCES, ENCLOSURE WALLS, ETC. AS REQUIRED TO PROTECT THE PUBLIC DURING THE PERIOD OF CONSTRUCTION.

19. PREPARE ALL FLOORS TO RECEIVE FINISHES INDICATED. ANY SURFACE DEFECTS AND IRREGULARITIES SHALL BE FILLED AND LEVELED. FLOOR SURFACES ARE TO BE LEVEL, CLEAN AND SMOOTH, MEETING THE MANUFACTURER'S SPECIFICATIONS, PRIOR TO INSTALLATION OF ANY FLOOR COVERING.

20. MAINTAIN THE JOB SITE IN A CLEAN, ORDERLY CONDITION FREE OF DEBRIS AND LITTER. REMOVE ALL TRASH AND DEBRIS AS A RESULT OF THE OPERATION ON A REGULAR BASIS DURING AND INMEDIATELY UPON COMPLETION OF EACH PHASE OF WORK.

21. ALL MATERIALS STORED ON THE SITE SHALL BE PROPERLY STACKED AND PROTECTED TO PREVENT DAMAGE AND DETERIORATION UNTILL USED. FAILURE TO PROTECT MATERIALS MAY BE CAUSE FOR REJECTION OF WORK.

22. PROVIDE ALL NECESSARY BLOCKING, BACKING AND FRAMING FOR LIGHT FIXTURES, ELECTRICAL UNITS, H.V.A.C. EQUIPMENT AND ALL OTHER ITEMS REQUIRING SAME.

23. ALL PIPING AND CONDUIT SHALL BE IN WALLS OR FURRED SPACES, UNLESS NOTED OTHERWISE.

24. MECHANICAL UNITS SHALL BE ANCHORED PER HURRICANE CODE.

25. OUTLETS AND TELEPHONES BACK IN A WALL SHALL BE SEPARATED BY A MINIMUM OF ONE STUD SPACE.

26. CONTRACTOR IS TO MAKE EXACT DETERMINATION AS TO THE LOCATION OF ALL EXISTING UTILITIES. DO NOT BEGIN WORK UNTIL THIS HAS BEEN DONE. CONTRACTOR IS FULLY RESPONSIBLE FOR DAMAGE CAUSED BY FAILURY TO LOCATE AND PRESERVE UTILITIES.

27. BEFORE STARTING A SECTION OF WORK, THE CONTRACTOR AND/OR HIS SUBCONTRACTOR SHALL CAREFULLY EXAMINE ALL PREPARATORY WORK THAT HAS BEEN EXECUTED TO RECEIVE HIS WORK. HE SHALL CHECK CAREFULLY, BY WHATEVER MEANS ARE REQUIRED, TO INSURE THAT HIS WORK AND ADJACENT RELATED WORK WILL FINISH TO PROPER CONTOURS, PLANS, AND LEVELS. HE SHALL PROMPTLY NOTIFY THE GENERAL CONTRACTOR OF ANY DEFECTS OR IMPERFECTIONS IN PREPARATORY WORKS WHICH WILL IN ANY WAY AFFECT SATISFACTORY COMPLETION ON HIS WORK.
ABSENCE OF SUCH NOTIFICATION WILL BE CONSTRUED AS AN ACCEPTANCE OF PREPARATORY WORK, AND LATER CLAIMS OF DEFECTS THEREIN WILL NOT BE RECOGNIZED.

28. UNDER NO CONDITION SHALL WORK PROCEED PRIOR TO PREPARATORY WORK HAVING BEEN COMAPACTED, CURED, DRIED, AND/OR OTHERWISE MADE SATISFACTORY TO RECEIVE SUCH RELATED WORK. RESPONSABILITY FOR TIMELY INSTALLATION OF ALL MATERIALS RESTS SOLELY WITH THE GENERAL CONTRACTOR WHO WILL MAINTAIN COORDINATION AT ALL TIMES.

29. DO NOT CUT-AND-PATCH STRUCTURAL WORK IN A MANNER RESULTING IN A REDUCTION OF LOAD CARRYING CAPACITY OR LOAD/DEFLECTION RATIO. DO NOT CUT-AND-PATCH OPERATIONAL ELEMENTS AND SAFETY-RELATED COMPONENTS IN A MANNER RESULTING IN A REDUCTION OF CAPACITIES TO PERFORM IN THE MANNER INTENDED OR RESULTING IN DECREASED OPERATIONAL LIFE, INCREASES MAINTENANCE, OR DECREASED SAFETY. DO NOT CUT-AND-PATCH WORK WICH IS EXPOSED ON THE EXTERIOR OR EXPOSED IN OCCUPIED SPACES OF THE BUILDING, IN A MANNER RESULTING IN A REDUCTION OF VISUAL QUALITIES, OR RESULTING IN SUBSTANCIAL EVIDENCE OF THE CUT-AND-PATCH WORK, AS JUDGED SOLELY BY THE STRUCTURAL ENGINEER. REMOVE AND REPLACE WORK JUDGED BY THE ARCHITECT TO BE UNSATISFACTORY.

30. ALL OPENING THROUGH FIRE-RATED WALLS SHALL BE PROTECTED WITH RATED ASSEMBLIES IN ACCORDANCE WITH THE REQUIRENTS OF STANDARDS BUILDING CODE AND N.F.P.A.

31. THE GENERAL CONTRACTOR SHALL BE RESPONSIBLE FOR ALL CONSTRUCTION SCHEDULING, AND SHALL BE RESPONSIBLE TO SEE THAT THE WORK IS DONE IN A TIMELY MANNER & ACCORDING TO PLANS .A PROGRESS SCHEDULE SHALL BE PREPARED AND SUBMITTED AS REQUIRED BY THE OWNER. THE ARCHITECT OR ENGINEER IS NOT RESPONSIBLE FOR ANY UNFORESEEN HIDDEN CONDITIONS DURING CONSTRUCTION. THESE WILL BE ADDRESSED AND BILLED SEPARATELY ACCORDING TO TYPE OF EXISTING CONDITION ON SITE.

32. THE GENERAL CONTRACTOR SHALL NOT ALLOW OR DIRECT MATERIALS OF ANY TRADE TO BE INSTALLED PREMATURELY, WHEN IT IS OBVIOUS THAT SUCH MATERIALS MAY BE DAMAGED BY SUBSEQUENT WORK OF OTHER TRADES. THE GENERAL CONTRACTOR SHALL TAKE SUCH STEPS AS ARE NECESSARY TO PROTECT SUCH COMPLETED WORK, EXCEPT WHEN SUCH WORK IS EXPRESSLY SPECIFIED TO BE PROTECTED BY THE SUB-CONTRACTOR INSTALLING THE WORK.

33. MISUNDERSTANDIGS OR MISCUMUNICATIONS BETWEEN THE GENERAL CONTRACTOR AND ALL SUBCONTRACTORS SHALL NOT BE THE RESPONSABILITY OF THE ARCHITECT AND OR ENGINEER, AND FURTHER THE ARCHITECT AND OR ENGINEER SHALL NOT SERVE AS REFEREE OR MIDDLE PERSON BETWEEN ANY MISUNDERSTANDIGS OR MISCUMUNICATIONS BETWEEN THE OWNER,GENERAL CONTRACTOR AND ALL SUBCONTRACTORS.

INTRUSION NOTES:

1. ALL LOCKS ON EXTERIOR DOORS SHALL BE CAPABLE OF RESISTING A FORCE OF 300 LBS. APPLIED IN ANY MOVABLE DIRECTION.
2. ALL SINGLE EXTERIOR SWING DOORS SHALL HAVE A LOCK TO BE KEY OPERATED FROM EXTERIOR WITH A MINIMUM OF 6000 POSSIBLE KEY CHANGES OR LOCKING COMBINATIONS IF KEY LOCK IS USED, THERE SHALL BE AN AUXILIARY SINGLE DEAD BOLT WITH HARDENED BOLT OR INSERTS.
3. THE ACTIVE LEAF OF PAIR OF EXTERIOR SWING DOORS SHALL HAVE SAME LOCKS AS REQUIRED FOR SINGLE EXTERIOR SWING DOORS. THE INACTIVE LEAF OF THESE PAIR OF DOORS SHALL HAVE MULTIPLE POINT LOCKS WITH 5/8" MINIMUM THROW BOLTS WITH INSERTS.
4. SLIDING GLASS DOORS SHALL BE PROVIDED WITH SLIDING DOOR DEAD BOLT OR A PIN NOT REMOVABLE OR OPERABLE FROM THE EXTERIOR AT THE JAMB, SILL, HEAD OR MEETING MULLIONS. THESE DOORS SHALL BE REINFORCED IN THE STRIKE AND LOCK AREA TO MAINTAIN BOLT STRENGTH EFFECTIVENESS IF NECESSARY AND SUCH DOORS SHALL HAVE NO SCREWS REMOVABLE FROM OUTSIDE WHICH WOULD FACILITATE READY ENTRY FROM OUTSIDE.
5. OVERHEAD DOORS SHALL BE PROVIDED WITH MULTIPLE POINT LOCKS OR BE LOCKED AT MORE THAN ONE POINT WITH HARDENED BOLTS OR BOLTS WITH INSERTS ENGAGING AT LEAST TWO OPPOSITE POINTS A MINIMUM OF 5/8". OTHER LOCKING DEVICES SHALL NOT BE REQUIRED WHERE SUCH DOORS ARE CONTROLLED AND LOCKED BY ELECTRIC POWER.
6. HINGES ON EXTERIOR OUT SWINGING DOORS SHALL HAVE NON-EXPOSED SCREWS AND NON PINS.
7. JAMBS OF ALL EXTERIOR OFFSET TYPE IN-SWINGING DOORS SHALL BE RABBET OR OF SIMILAR FABRICATION TO PREVENT DEFEATING THE PURPOSE OF THE STRIKE AND THE INTEGRITY OF LOCKS AND LATCHES.
8. SINGLE SWINGING EXTERIOR DOORS, IF WOOD, SHALL BE SOLID CORE OF NOT LESS THAN 1 3/8" THICK.
9. GLASS IN EXTERIOR DOORS SHALL COMPLY WITH THE AMERICAN NATIONAL STANDARDS INSTITUTES Z97.1.
10. VISION PANELS IN EXTERIOR DOORS, OTHER THAN GLAZING WITHIN 40" OF THE INSIDE LOCKING ACTIVATING DEVICE OF LOCKS AND SWINGING GLASS DOORS SHALL COMPLY WITH AMERICAN NATIONAL STANDARDS INSTITUTE, STANDARD Z97.1.
11. SLIDING GLASS DOORS AND WINDOWS SHALL NOT BE INSTALLED CLOSER THAN 40" TO THE INSIDE LOCK ACTIVATING DEVICE.
12. VENTS IN OVERHEAD GARAGE TYPE DOORS SHALL NOT BE INSTALLED CLOSER THAN 40" TO THE INSIDE LOCK ACTIVATING DEVICE.
13. SINGLE SWING EXTERIOR AND SWING DOORS CONNECTING LIVING AREAS WITH GARAGE AREAS SHALL BE SECURED WITH A LATCH AND A SINGLE DEAD BOLT WITH ONE INCH MINIMUM THROWS OR A COMBINATION OF DEAD LATCH AND DEAD BOLT SETS WITH LATCH THROW A MINIMUM OF 1/2" AND BOLTS HAVING A 1" MINIMUM THROW. DOORS SHALL BE A MINIMUM OF 1 3/8" THICK SOLID CORE.
14. FRONT MAIN ENTRANCE DOORS SHALL BE PROVIDED WITH A SCOPE OR VISION PANELS.

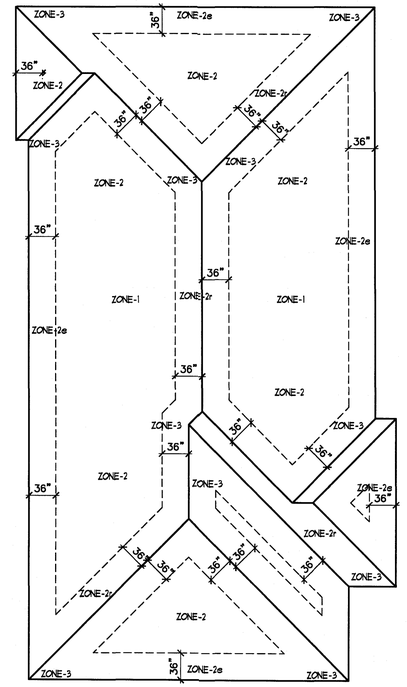

ROOF ZONE/DIAPHRAM REFERENCE PLAN

SCALE:1/8"=1'-0"

AS PER ASCE 7-16

ROOF GROSS PRESSURE (ASD DESIGN)			
ZONE-1	16.29	-40.85	
ZONE-2e	16.29	-43.45	
ZONE-2r	16.29	-50.23	
ZONE-3	16.29	-43.45	

PROJECT NAME: ADDITION TO RESIDENCE FOR:
OWNER/PH: AMBAR PREVAL 786-587-7391
ADDRESS:200 N. ESPLANADE DRIVE MIAMI SPRINGS, FLORIDA 33166
PROJECT ADD: SAME

NO.	DATE

DESG | DRWN | CHKD | APPV | DATE

Guillermo Ramon Gonzalez
9000 SW. 166th Avenue Miami Florida 33196 Ph:305-484-8171
Registered Architect #13960 Ph:786-237-8154 (assistant)

101521

A-6

STATE OF FLORIDA
GUILLERMO RAMON GONZALEZ
AR0013960
REGISTERED ARCHITECT

Guillermo Ramon Gonzalez
R.A. 13960
STATE OF FLORIDA

CITY OF MIAMI SPRINGS
APPROVED
FOR PERMIT ONLY

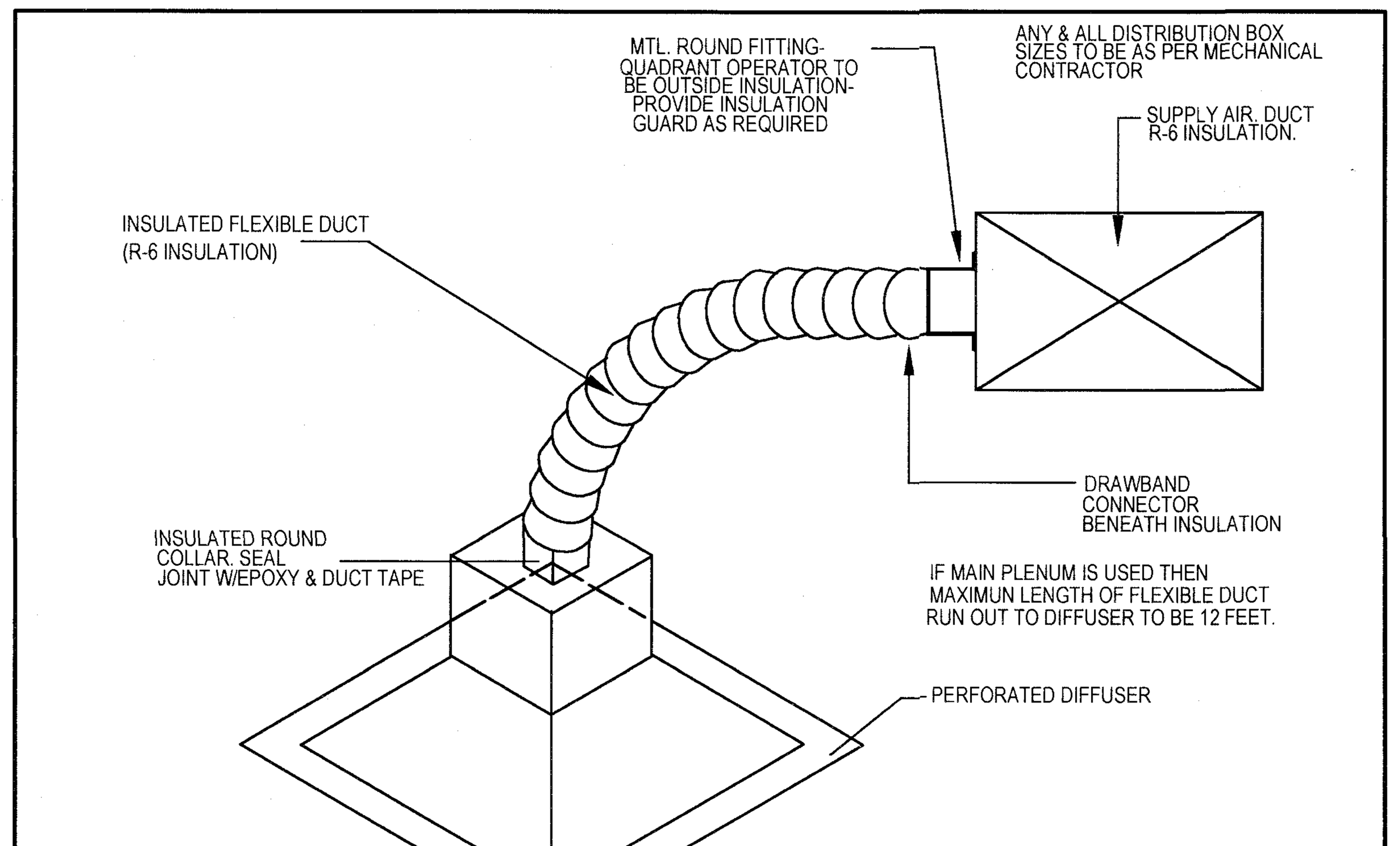

NOTE: - HANGER SIZE FOR FLEX-DUCT SHALL BE 1-1/2" MIN. 22GAUGE
- DUCT SUPPLY/RETURN SHALL BE 1-1/2" (R-6) FUBERGLASS U.L. LISTED
CLASS 1 AIR DUCT

TYPICAL FLEXIBLE DUCT CONNECTION

N.T.S.

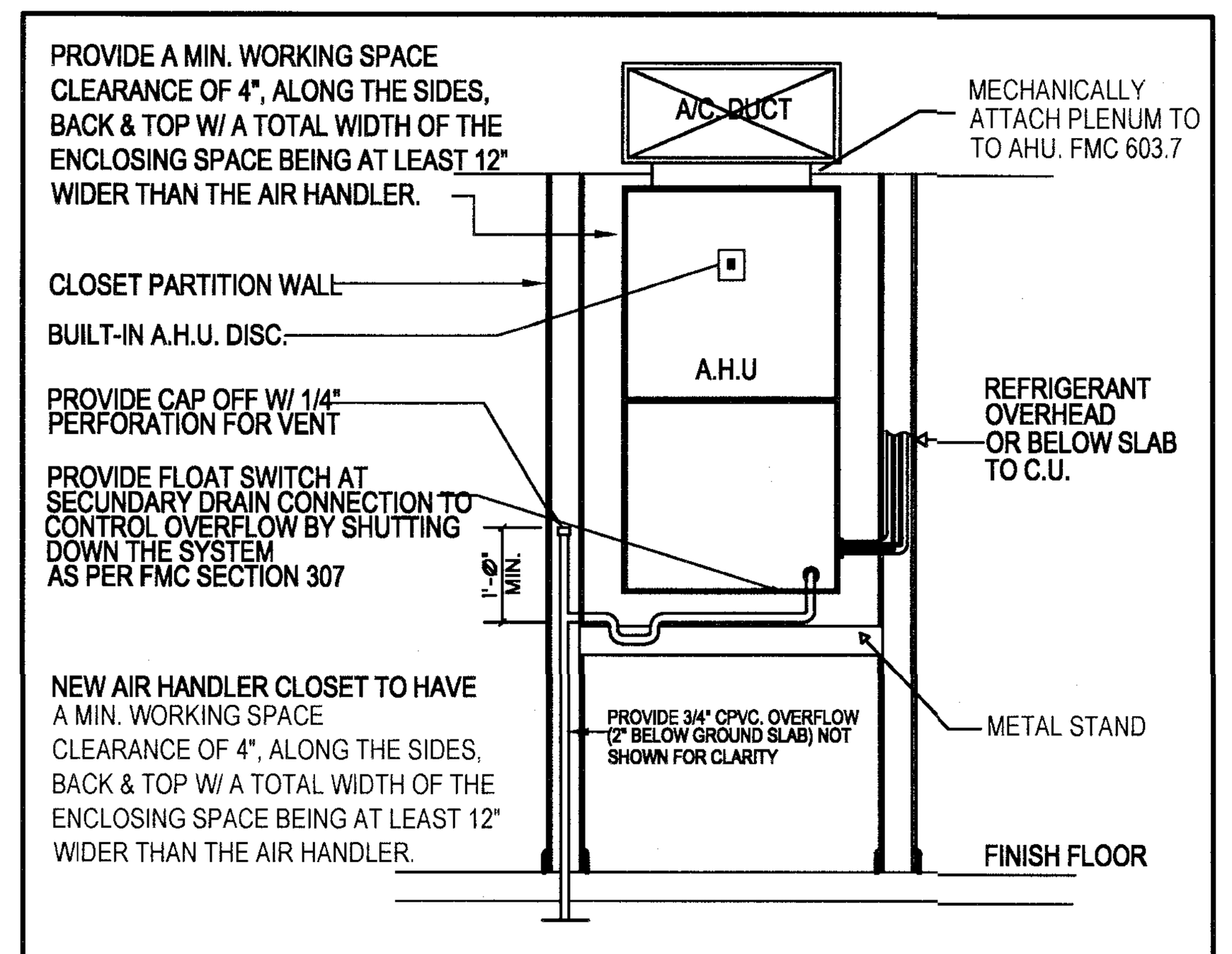

NEW AIR HANDLER UNIT DETAIL N.T.S.

NOTE 1: EXHAUST FAN SCHEDULE

MANUFACTURER:	NuTone
MODEL:	695
CFM:	50
SP:	0.10"
DRIVE:	DIRECT
LOCATION:	CEILING
ACCESORIES:	DRAFT DAMPER

NOTE: USE DESIGNATED EXHAUST FAN OR APPROVED EQUAL

SUPPLY & RETURN GRILLES BY TUTUS OR APPROVED SIMILAR OR SUPPLY GRILLES MAYBE REGULAR RECTANGULAR TYPE

LINEAL SLOT MODEL ML 38, AND 39, COVER TYPE: 2B. (OR APPROVED EQUAL)
ALL OTHER SUPPLY GRILLES: 1 & 2 & 3 SLOTS PATTERN CONTROLLED, CONCEALED MOUNTING COVER, WHITE FINISH AND MPI- SP DIFFUSER PLENUMS W/ 1" INSULATION.

L4	ML 39, 2-(1") SLOTS, 4' LONG, 225 CFM
L3	ML 39, 2-(1") SLOTS, 3' LONG, 125 CFM

ALL OTHER SUPPLY AIR DIFFUSERS SIZES TO BE AS SHOWN

WHERE THE AIR INFILTRATION RATE IN A DWELLING UNIT IS LESS THAN 3 AIR CHANGES PER HOUR WHEN TESTED WITH A BLOWER DOOR AT A PRESSURE OF 0.2-INCH WATER COLUMN (50 PA) IN ACCORDANCE WITH SECTION 402.4.1.2 OF THE FLORIDA BUILDING CODE, ENERGY CONSERVATION, THE DWELLING UNIT SHALL BE VENTILATED BY MECHANICAL MEANS IN ACCORDANCE WITH SECTION 403. FBC R-303.4.

AIR CONDITIONING SPLIT SYSTEM EQUIPMENT SCHEDULE

TOTAL CAPACITY, BTU/HR.	57000
NET SENSIBLE LOAD, BTU/HR.	40500
NET LATENT, BTU/HR.	16500
COOLING SEER	16
MANUFACTURER	Rheem
DESIGNATION	(AHRI 7943715)

AIR HANDLER UNIT — RH1T Series

DESIGNATION	A.H.U.
MODEL No:	RH1T6024STANJA
SUPPLY AIR, CFM	1600
FAN SPEED	HIGH
FAN MOTOR, HP - [W]	3/4 - [559]
ELECTRIC HEATER kW.	10.0
(VOLTS) - PHASE	(208/240) - 1/60
NET WEIGHT LBS.	159

UNIT DIMENSIONS: W=25", H=56", L=22"

CONDENSER UNIT — RA16 Series

DESIGNATION	C.U.
MODEL No:	RA1660AJ1NA
TOTAL KW.	6.5
CONDENSER ENT. AIR F.	95°
COMPRESOR RLA-LRA	23.7 - 152
FAN MOTOR FLA	3.5
(VOLTS) - PHASE	(208/230) - 1/60
NET WEIGHT LBS.	240

UNIT DIMENSIONS: W=36", H=51", L=36"

REFRIGERANT LINES: LIQUID LINE: 3/8" - VAPOR LINE: 7/8"
INSTALL MANUFACTURER'S RECOMMENDED THERMOSTAT
INSTALL DESIGNATED A/C SYSTEM OR APPROVED EQUAL

CONTRACTOR TO VERIFY A.H.U. UNIT DIMENSIONS WITH A.H.U. CLOSET., & C.U. DIMENSION WITH CONCRETE SLAB SIZE / F.F.E.

HVAC DESIGN REQUIREMENTS	YES	NO
DUCT SMOKE DETECTOR		●
FIRE DAMPER(S)		●
SMOKE DAMPER(S)		●
FIRE RATED ENCLOSURE		●
FIRE RATED ROOF CEILING ASSEMBLY		●
FIRE STOPPING		●
SMOKE CONTROL		●
PROGRAMABLE THERMOSTAT	●	

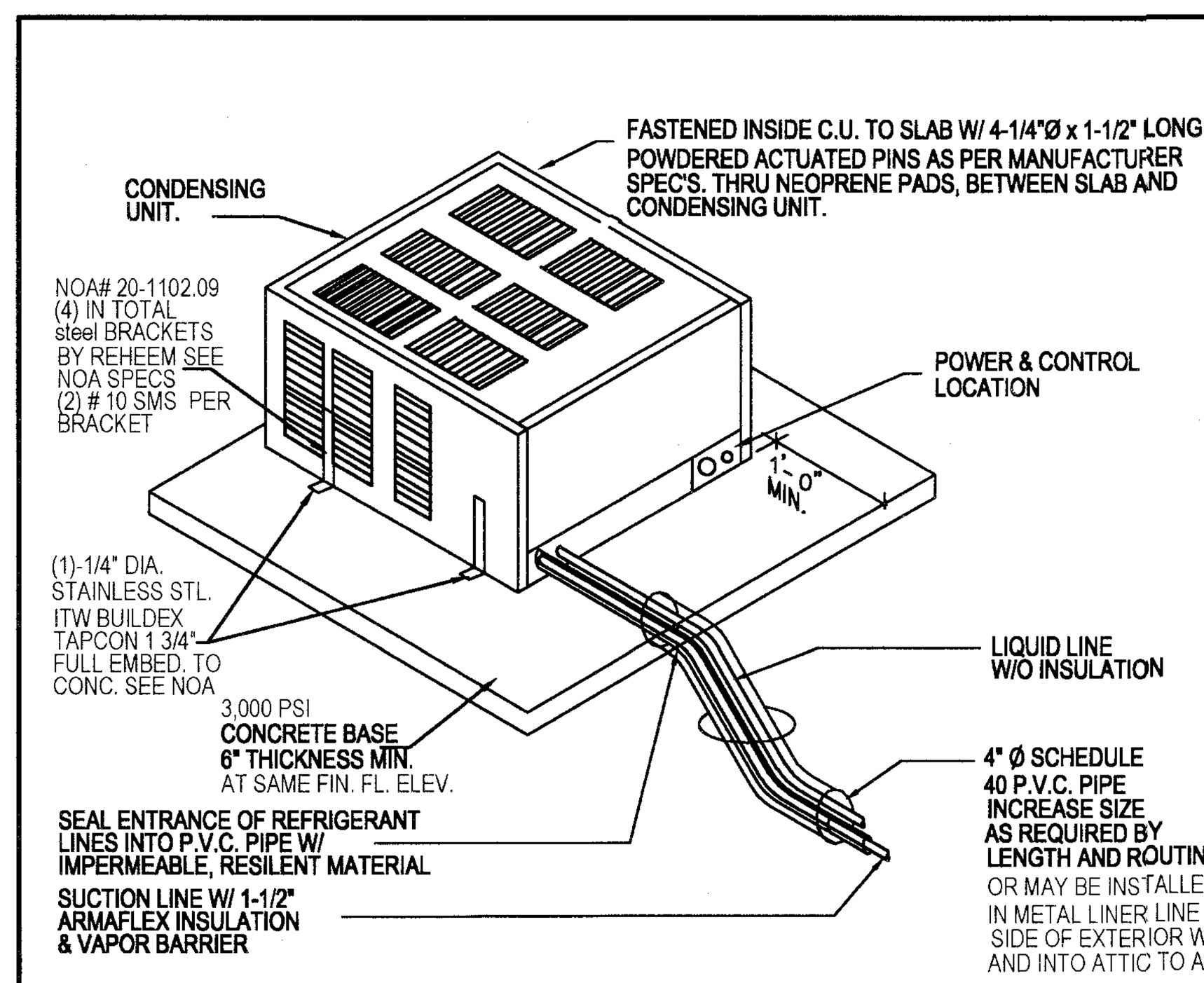

NOTES:
1-ALL C.U. SHALL BE ANCHORED TO CONC. PADS & TO COMPLY W/ 301.13 OF THE FMC TO STAND 175 M.P.H. WIND
2-SECURE EXTERIOR AIR CONDITIONING CONDENSING UNIT FOR THEFT AS PER MIAMI-DADE COUNTY ORDINANCE SECTION 8C-5
3-THE CONDENSING UNIT SHALL BE PLACED, AS TO MATCH THE FINISH FLOOR ELEVATION OF THE PROPOSED BUILDING.
4-ANCHOR CONDENSING UNIT AS PER RHEEM NOA SPECS ATTACHED & SUBMITTED. ANCHOR TO EXIST. CONC. PAD.

NEW CONDENSING UNIT DETAIL

N.T.S.

H.V.A.C. NOTES:

1. ALL WORK SHALL BE PERFORMED IN ACCORDANCE WITH MECHANICAL OF "F.B.C." 2020 7th EDITION AND ALL OTHER PERTAINING CODES.
2. ALL WORK SHALL BE PERFORMED BY A LICENSED MECHANICAL CONTRACTOR, WORK TO BE IN THE ACCEPTANCE OF THE OWNER AND THE ENGINEER
3. THE CONTRACTOR SHALL HAVE VISITED THE JOB SITE BEFORE BIDDING AND FAILURE TO DO SO WILL NOT BE ACCEPTED AS A REASON FOR REQUESTING EXTRA PAY IN THE EVENT THAT THE EXISTING CONDITIONS RESULT IN EXTRA MATERIALS OR LABOR.
4. ALL WORK SHALL BE COORDINATED WITH OTHER TRADES TO AVOID INTERFERENCE WITH THE PROGRESS OF MECHANICAL CONSTRUCTION, ANY EXISTING CONDITION FOUND AND/OR DISCREPANCIES FOUND BY THE CONTRACTOR SHALL BE BROUGHT TO THE ATTENTION OF THE OWNER AND ENGINEER
5. INSULATE REFRIGERANT SUCTION PIPING WITH 1/2" CLOSED CELL POLYETHYLENE PRE-MOLDED PIPE INSULATION HAVING A THERMAL RESISTIVITY OF R-4 MIN. AS PER FBCR-M 1411.6
6. UNDERGROUND CONDENSE DRAIN LINE SHALL BE 2" DIA. MINIMUM
7. ALL REFRIGERANT COMPRESSORS SHALL BE WARRANTED FOR A MINIMUM OF 5 YEARS AFTER DATE OF ACCEPTANCE OF THE PROJECT.
8. ALL EQUIPMENT AS PER MANUFACTURER RECOMMENDATIONS TO ELIMINATE ANY EQUIPMENT NOISE AND VIBRATION
9. AFTER THE SYSTEM IS INSTALLED CONTRACTOR SHALL CONDUCT AN OPERATIVE TEST FOR APPROVAL AND ACCEPTANCE BY THE OWNER/ENGINEER SHALL BE GUARANTEED FOR A PERIOD OF 1 YEAR FROM THE DATE OF FINAL ACCEPTANCE THEREOF AGAINST DEFECTIVE MATERIALS AND WORKMANSHIP.
10. ALL EXHAUST DUCTS SHALL BE CONSTRUCTED OF SHEET METAL, TERMINATE OUTSIDE THE BUILDING, AND BE EQUIPPED WITH A BACK DRAFT DAMPER
11. DUCTS FROM TOILET ROOMS SHALL DISCHARGE TO THE OUTSIDE OF THE BUILDING, SHALL BE TERMINATED NOT LESS THAN 6" ABOVE THE FINISHED ROOF SURFACE AND SHALL BE SCREENED WITH A CORROSION RESISTANT MATERIAL HAVING A MESH SIZE NOT LARGER THAN 1/2". (SEE DTL. FOR GOOSE NECK OR RAIN CAP ON ROOF TERMINATION)
12. CLOTHES DRYERS EXHAUST DUCTS OR VENTS SHALL COMPLY WITH MANUFACTURE'S INSTALLATION INSTRUCTIONS, BE CONSTRUCTED OF A MIN. 26 GAUGE METAL PIPE, HAVING A SMOOTH INTERIOR SURFACE WITH JOINTS RUNNING IN THE DIRECTION OF THE AIR FLOW.
13. VENTILATION DUCTWORK SHALL BE GALVANIZED STEEL WITH GAUGES DUCT CONSTRUCTION BRACING AND SUSPENSION IN ACCORDANCE WITH THE RECOMMENDATIONS SET IN THE LATEST EDITION OF THE ASHRAE GIDE AND SMACNA STANDARDS

REFRIGERANT CIRCUIT ACCESS PORTS LOCATED OUTDOORS SHALL BE FITTED WITH LOCKING-TYPE TAMPER-RESISTANT CAPS OR SHALL BE OTHERWISE SECURED TO PREVENT UNAUTHORIZED ACCESS UNLESS THE PORTS ARE LOCATED INSIDE THE CONDENSING UNIT CABINET (FBCR-M1411.8)

NOTE CODES IN EFFECT: & FBC 2020, 7th EDITION MECHANICAL.

AIR CONDITIONING LEGEND

SYMBOL	LEGEND	SYMBOL	LEGEND
A.H.U.	AIR HANDLING UNIT	O.B.D.	OPPOSED BLADE DAMPER
C.U.	CONDENSING UNIT	(T)	THERMOSTAST
O.A.	OUTSIDE AIR		DUCTWORK
R/A	RETURN AIR	F.D.	FLEXIBLE DUCT
S.A.	SUPPLY AIR	⊠	SUPPLY AIR DIFUSSER
W.S.A.	WALL SUPPLY AIR	⧄	AXHAUST FAN
C.S.A.	CEILING SUPPLY AIR		MANUAL VOLUME DAMPER
RL & S	REFRIGERANT LIQUID & SUCTION PIPE	(A)	DENOTES AIR DISTRIBUTION DEVICE
CFM	CUBIC FEET PER INUTE	▷ ◇	DISTRIBUTION BOX
M.V.D.	MANUAL VOLUME DAMPER	UC	UNDER CUT DOOR ABOVE FINISH FLOOR AS NOTED

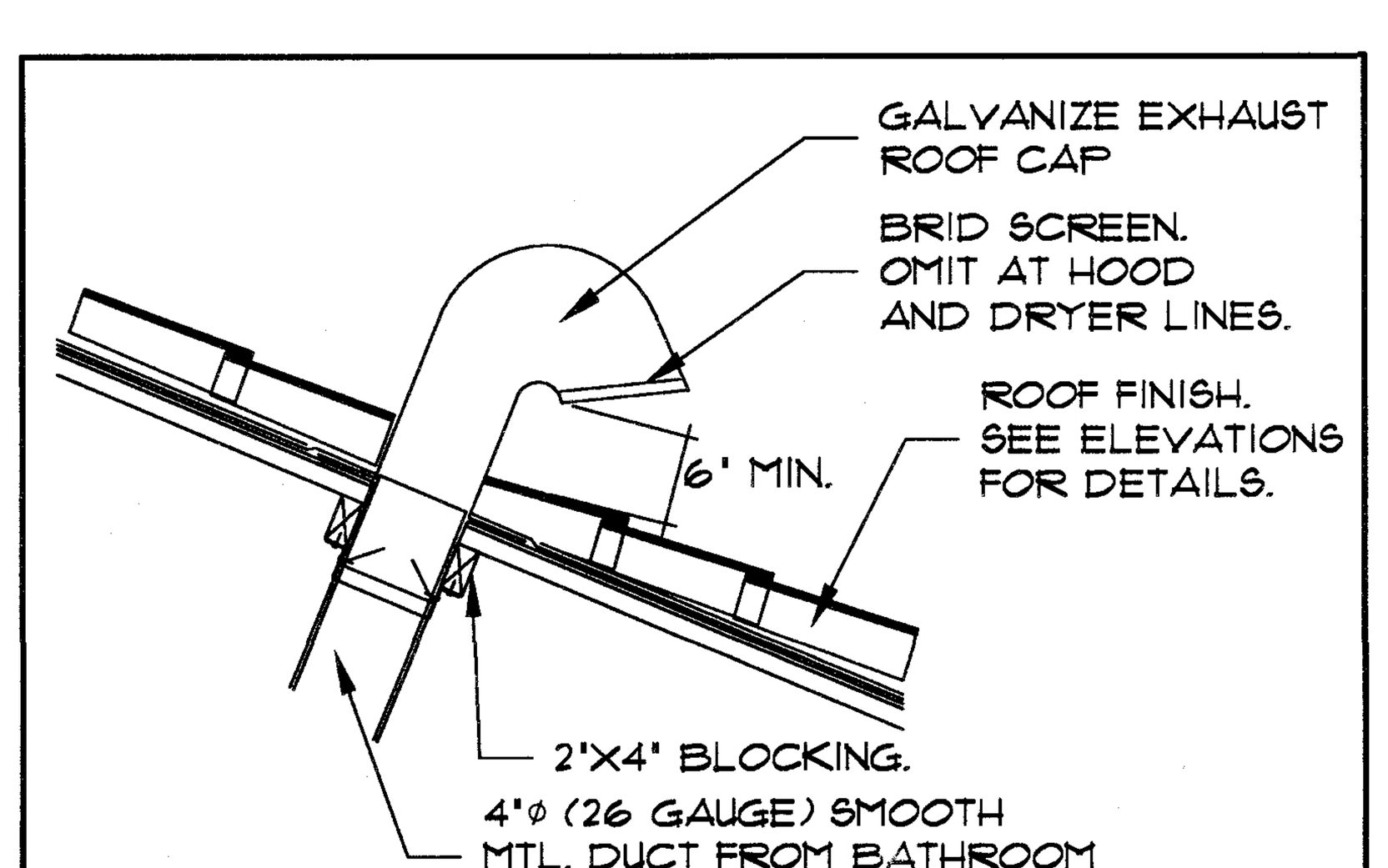

EXHAUST ROOF CAP DETAIL
BATHROOM/DRYER EXHAUST FAN
Scale: N.T.S.

NOTE: NEW HVAC SYSTEM MAY BE WHAT WAS SPECIFIED OR A DIFFERENT MAKE/MODEL APPROVED EQUAL TO MATCH SIZE CAP., BTUS, SEER, CFMS, ETC. MAYBE INSTALLED.

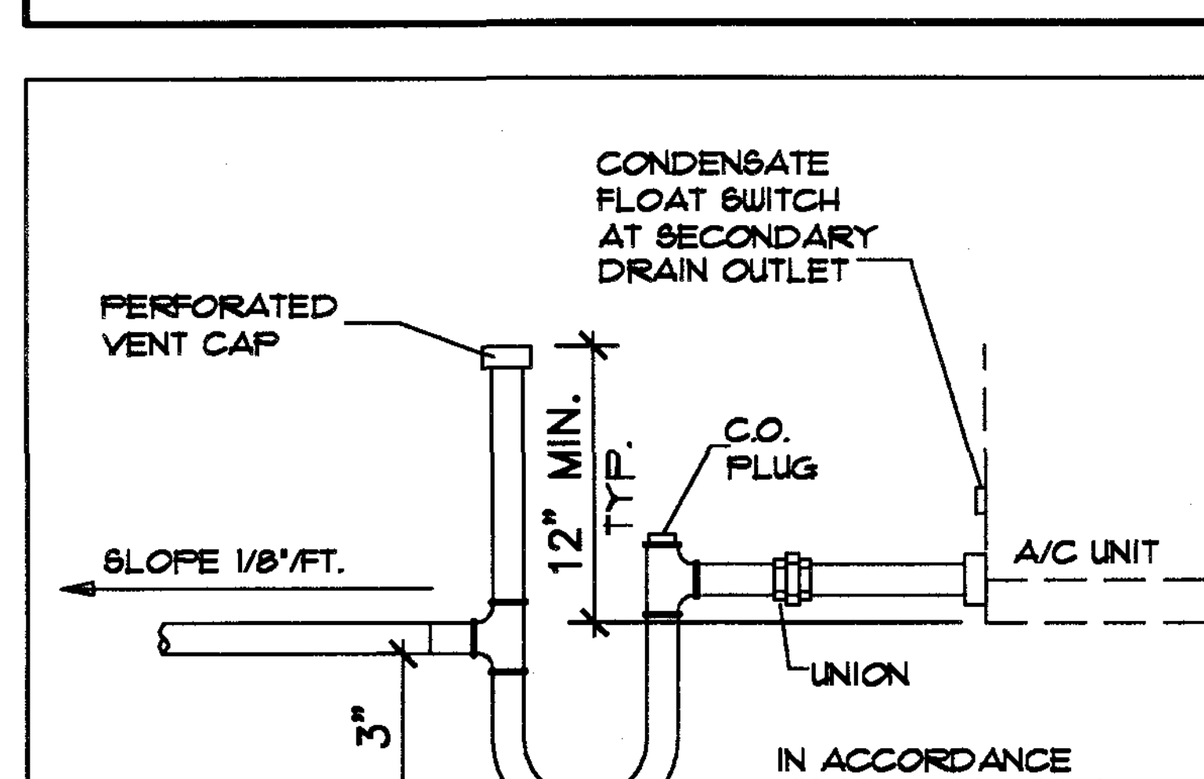

CONDENSATE TRAP DETAIL
SCALE: NTS

NOTE: AIR RETURN GRILLS MAY BE PLACED/INSTALLED ABOVE DOOR HEADERS, *AND OR CEILING GRILLS*, BUT IN ANY CASE MUST COMPLY WITH "FMC-601.4"

NOTE: ALL DUCTWORK LAYOUT SHOWN IS PRIMARY SCHEMATICAL. ACTUAL DUCT SIZES & LAYOUT MAY VARY AS PER MECHANICAL CONTRACTOR LAYOUT
—/\/\/→ DENOTES: 1" DOOR UNDERCUT

AIR BALANCE NOTE:
1.Transfer ducts may achieve this by increasing the return transfer 11/2 times the cross sectional area (square inches) of the supply duct entering the room or space it is serving and the door having at least an unrestricted 1-inch undercut to achieve proper return air balance.
2.Transfer grilles shall use 50 square inches (of grille area) to 100 cfm (of supply air) for sizing through-the-wall transfer grilles and using an unrestricted 1-inch undercutting of doors to achieve proper return air balance.
3.Habitable rooms only shall be required to meet these requirements for proper balanced return air excluding bathrooms, closets, storage rooms and laundry rooms, except that all supply air into the master suite shall be included.

MECHANICAL SCOPE OF WORK:
REMOVE EXIST. HVAC SYSTEM. PROVIDE COMPLETE NEW HVAC SPLIT SYSTEM.
NEW SUPPLY AIR GRILLS WHERE REQUIRED AS SHOWN AT NEW/EXIST. AREAS
NEW DRYER EXHAUST VENT FOR NEW LAUNDRY ROOM LOCATION.
PROVIDE NEW EXHAUST FANS AT ALL NEW/EXIST. BATHROOMS AS SHOWN.
PROVIDE ALL NEW DUCT WORK, MAY VARY IN SIZE AS PER HVAC CONTRACTOR.
PROVIDE NEW RETURN AIR DUCTS/GRILLS AS SHOWN ON PLAN.
NEW TRANSFER RAGS. TO BE INSTALLED OVER DOOR HEADER OR IN CEILINGS.
PROVIDE 1" UNDERCUT AT ALL INTERIOR DOORS AS SHOWN.

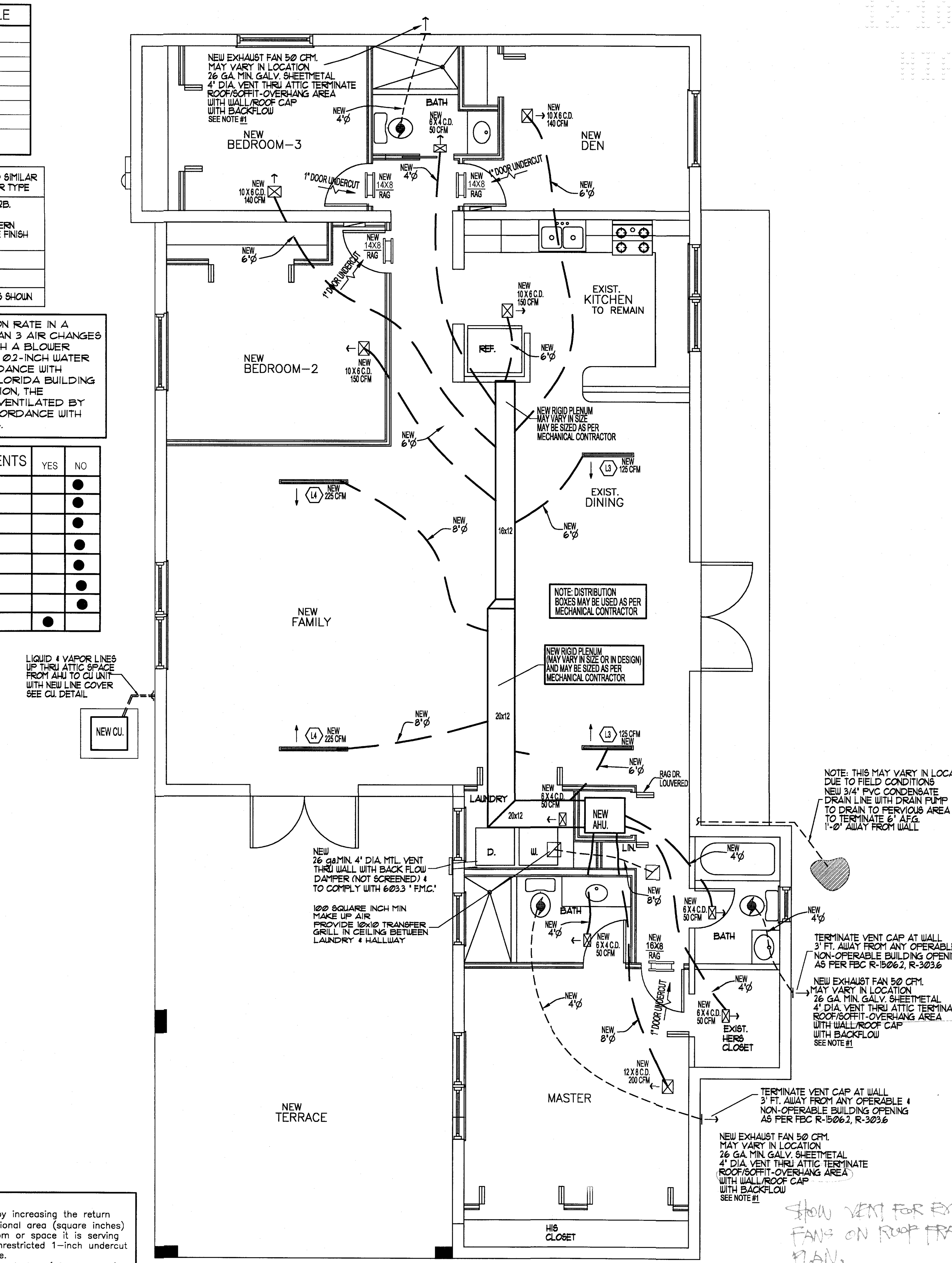

PROPOSED MECHANICAL FLOOR PLAN
SCALE:1/4"=1'-0"

Show vent for exh. fans on roof framing plan.

NOTE: TRADE CONTRACTOR IS RESPONSIBLE FOR ANY COST EFFECTIVE REVISIONS TO PLANS IF ORIGINAL DESIGN OF APPROVED PLANS ARE NOT FOLLOWED. A DIFFERENT METHOD IN DESIGN MAY BE USED AFTER CONSTRUCTION & PERMIT DOCUMENTS ARE ACTIVE IN FIELD, BUT AGAIN TRADE CONTRACTOR WILL BE RESPONSIBLE FOR ANY INCURRED COSTS DUE TO ANY REQUIRED REVISION WORK ON THE ORIGINAL APPROVED PLANS. ANY AND ALL CHANGES TO PLANS MUST BE APPROVED BY THE ENGINEER OR ARCHITECT OF RECORD & BUILDING DEPT. AND WILL BE BILLED ACCORDINGLY.

CITY OF MIAMI SPRINGS
APPROVED
FOR PERMIT ONLY

STATE OF FLORIDA · GUILLERMO RAMON GONZALEZ · AR0013960 · Seal · REGISTERED ARCHITECT
Guillermo Ramon Gonzalez
R.A. 13960
STATE OF FLORIDA

PROJECT NAME: ADDITION TO RESIDENCE FOR:
OWNER/PH: AMBAR PREVAL 786-587-7391
ADDRESS: 200 N. ESPLANADE DRIVE MIAMI SPRINGS, FLORIDA 33166
PROJECT ADD: SAME

Guillermo Ramon Gonzalez
9000 SW. 168th Avenue Miami Florida 33196 Ph:305-484-8171
Registered Architect #13960 Ph:786-237-5154 (assistant)

101521

M-1

ELECTRICAL NOTES:

1. ALL WORK SHALL BE PERFORMED IN ACCORDANCE WITH THE LATEST EDITION OF THE NEC, & NFPA-70 AND ALL OTHER PERTAINING CODES AND REGULATIONS ESTABLISHED BY AUTHORITIES HAVING JURISDICTION, AND SHALL MEET THE REQUIREMENTS OF OTHER RECOGNIZED STANDARDS AS THE ASTM,IEEE,NFPA AND NEMA,WHERE THE REQUIREMENTS OF SUCH STANDARDS ARE MORE STRINGENT THAN THOSE CITED ABOVE.
2. ALL WORK SHALL BE PERFORMED BY A LICENSED ELECTRICAL CONTRACTOR IN A FIRST CLASS MANNER, FULLY OPERATIVE, AND TO THE ACCEPTANCE OF THE OWNER AND THE ENGINEER.
3. ALL ELECTRICAL MATERIALS AND EQUIPMENT SHALL BE APPROVED BY U.L.AND SHALL BEAR THE U.L. LABEL.
4. THE PLANS ARE GENERALLY DIAGRAMMATIC AND THE CONTRACTOR SHALL COORDINATE HIS WORK WITH THE WORK OF OTHER TRADES SO THAT INTERFERENCE BETWEEN CONDUITS PIPING AND STRUCTURAL WORK WILL BE AVOIDED.
5. THE CONTRACTOR SHALL HAVE VISITED THE JOB SITE BEFORE BIDDING AND ASCERTAINED ALL EXISTING CONDITIONS WHICH WILL AFFECT HIS WORK. FAILURE TO DO SO WILL NOT BE ACCEPTED AS A REASON FOR REQUESTING EXTRA PAY IN THE EVENT THAT THE EXISTING CONDITIONS RESULT IN EXTRA MATERIALS OR LABOR.
6. ANY EXISTING CONDITION FOUND BY THE CONTRACTOR WHICH WILL ADVERSELY AFFECT THE WORK SHALL IMMEDIATELY BE BROUGHT TO THE ATTENTION OF THE OWNER AND/OR THE ENGINEER.
7. AFTER THE SYSTEM IS INSTALLED CONTRACTOR SHALL CONDUCT AN OPERATIVE TEST FOR APPROVAL AND ACCEPTANCE BY THE OWNER. EQUIPMENT SHALL BE GUARANTEED FOR A PERIOD OF 1 YEAR FROM THE DATE OF FINAL ACCEPTANCE THEREOF AGAINST DEFECTIVE MATERIALS AND WORKMANSHIP.
8. ALL CONDUCTORS SHALL BE SOFT COPPER WITH THW/THWN 600 VOLT INSULATION CONDUIT SHALL BE RGS OR IMC FOR EXTERIOR RUNS, EMT FOR CONCEALED AND INTERIOR RUNS NOT EXPOSED TO WEATHER OR MECHANICAL DAMAGE MAY BE USED UNDERGROUND WHERE BURIED 18" AND PROVIDED WITH A GROUND WIRE AS PER NEC 250.
9. TYPE "NM" GROUNDED COPPER CABLE AS MANUFACTURE BY "ROMEX" OR APPROVED EQUAL MAY BE USED WHERE IN PARTITIONS AND INTERIOR SPACES.
10. GROUNDING SHALL COMPLY WITH NEC 250 AND SHALL CONSIST OF COPPER CONDUCTORS IN CONDUIT WITH BOLTED OR BRAZED CONNECTIONS TO COLD WATER PIPE RODS, AND ALL AVAILABLE ELECTRODES. (NEC: 250.50).
    ALL METALLIC RACEWAYS SHALL BE GROUNDED.
11. MECHANICAL EQUIPMENT DISCONNECT SWITCHES SHALL BE PROVIDED WITH DUAL ELEMENT FUSES SIZED AS NOTED PER MANUFACTURER'S RECOMMENDATION VERIFY BEFORE INSTALLATION.
12. MOTORS, TRANSFORMERS AND MECHANICAL EQUIPMENT SHALL BE PROVIDED WITH GREEN FIELD FLEXIBLE CONNECTIONS, WATERTIGHT WHERE EXPOSED TO MOISTURE AND WEATHER CONDITIONS.
13. IF NO RISER DIAGRAM IS SHOWN AS PART OF THESE PLANS; CONNECT TO EXISTING PANEL, RAISE CAPACITY OF PANEL & SERVICE IF REQUIRED.

F.E.M.A. NOTES:

1. ELECTRICAL OUTLETS (RECEPTACLES AND LIGHTING) BELOW BASE FLOOD ELEVATION SHALL BE INSTALLED AT HIGHEST PERMITTED ELEVATION AND SHALL BE INSTALLED ON (SEPARATE) INDEPENDENT CIRCUITS FROM THOSE IN THE HABITAT AREAS.
2. NO APPLIANCES OR APPLIANCES OUTLETS SHALL BE INSTALLED BELOW BASE FLOOD ELEVATION.
3. A/C COMPRESSORS SHALL BE INSTALLED ABOVE BASE FLOOD ELEVATION.
4. MAIN CIRCUIT BREAKER PANELS SHALL BE LOCATED ABOVE BASE FLOOD ELEVATION.
5. IT IS SUGGESTED THAT YOU CONFER WITH FLORIDA POWER & LIGHT TO LOCATE THE ELECTRIC METER TO COMPLY WITH FEDERAL EMERGENCY MANAGEMENT AGENCY REQUIREMENTS.

NOTE: PRIOR TO INSTALLATION OF ROUGH ELECTRICAL WIRING, CHECK NAME PLATE DATA OF EQUIPMENTS, TO OBTAIN CORRECT WIRE SIZES & OVER CURRENT PROTECTION

200 A. 1PH. 3W. 120/240 — FLUSH MOUNT — EXIST. 200 AMP PANEL ELECTRICAL SCHEDULE

	CCK	DESCRIPTION	TRIP	VOLTS	COND	WIRE	KW	REMARKS
EXIST. LOADS	1–2	EXIST. GEN. LGHTS/RECEPTS.	15	120	ROMEX	14	7.1	(2,374 SQ. FT.) (3W)
	3,5	DRYER	2/25	240		10	5.0	
	4,6	EXIST. TANK LESS W.H.	2/60	240		6	16.0	
	7	REFRIGIRATOR	20	120		12	1.0	
	8	DISHWASHER	20	120		12	1.2	
	9	GARBAGE DISPOSAL	20	120		12	1.5	
	10	WASHING MACHINE	20	120		12	1.5	
	11–13	SPARES						
	12–14	SPARES	TOTAL AT 200 AMP PANEL				33.3	
OTHER EXIST. AND NEW LOADS	16–18B	125 A. 1PH. 3W. EXIST. 125 A.MP 120/240 M.C.B. FOR SUB PANEL			CONDUIT SIZE	3#1		EXIST. INTERIOR MOUNTED
	1B–8B	NEW LIGHTING & RECEPTS.	15	120	1/2"	14	--	SEE ABOVE
	9B–11B	NEW A.H.U. #2	2/60	240		6	10.0	5.2 KW COOLING LOAD NOT COINCIDENT
	10B,12B	NEW C.U. #2	2/40	240	3/4"	8		
	13B,15B	EXT. LIGHTS & RECEPTS.	20	120	ROMEX	12	--	SEE ABOVE
	14B	GFCI BATHROOM OUTLETS	20	120		12	--	SEE ABOVE
	16B,18B	EXIST. SMALL APPLIANCES	20	120		12	3.0	
	17B,19B	EXIST. RANGE	2/50	240		6	12.0	
	20B,21B	SPARES	TOTAL AT 125 AMP PANEL				25.0	
						TOTAL=	58.3	

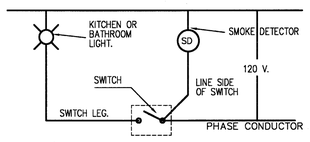

S/D NOTE:
SMOKE DETECTOR SHALL BE HARDWIRED (110 VOLT TYPE) TO A NON-SWITCHABLE KITCHEN OR BATHROOM LIGHTING CIRCUIT, WITH BATTERY BACK-UP AND SHALL NOT BE CONNECTED ONTO THE LOAD SIDE OF GROUND FAULT CIRCUIT INTERRUPTER. ALL SMOKE DETECTORS WITHIN EACH UNIT SHALL BE INTERCONNECTED.

(CSD) = CARBON MONOXIDE COMBO

CONNECTED LOAD

	58,300
-A/C =	10,000
	48,300

DEMAND CALCULATION

1st 10 KW @	100%	10,000
REMAINDER @	40%	9,320
A/C @	100%	20,000
DEMAND LOAD		39,320 VA

39,320 / 240 = 163.83 AMPS

EXIST. 200 AMP MCB. & ELECTRICAL PANELS SUFFICES

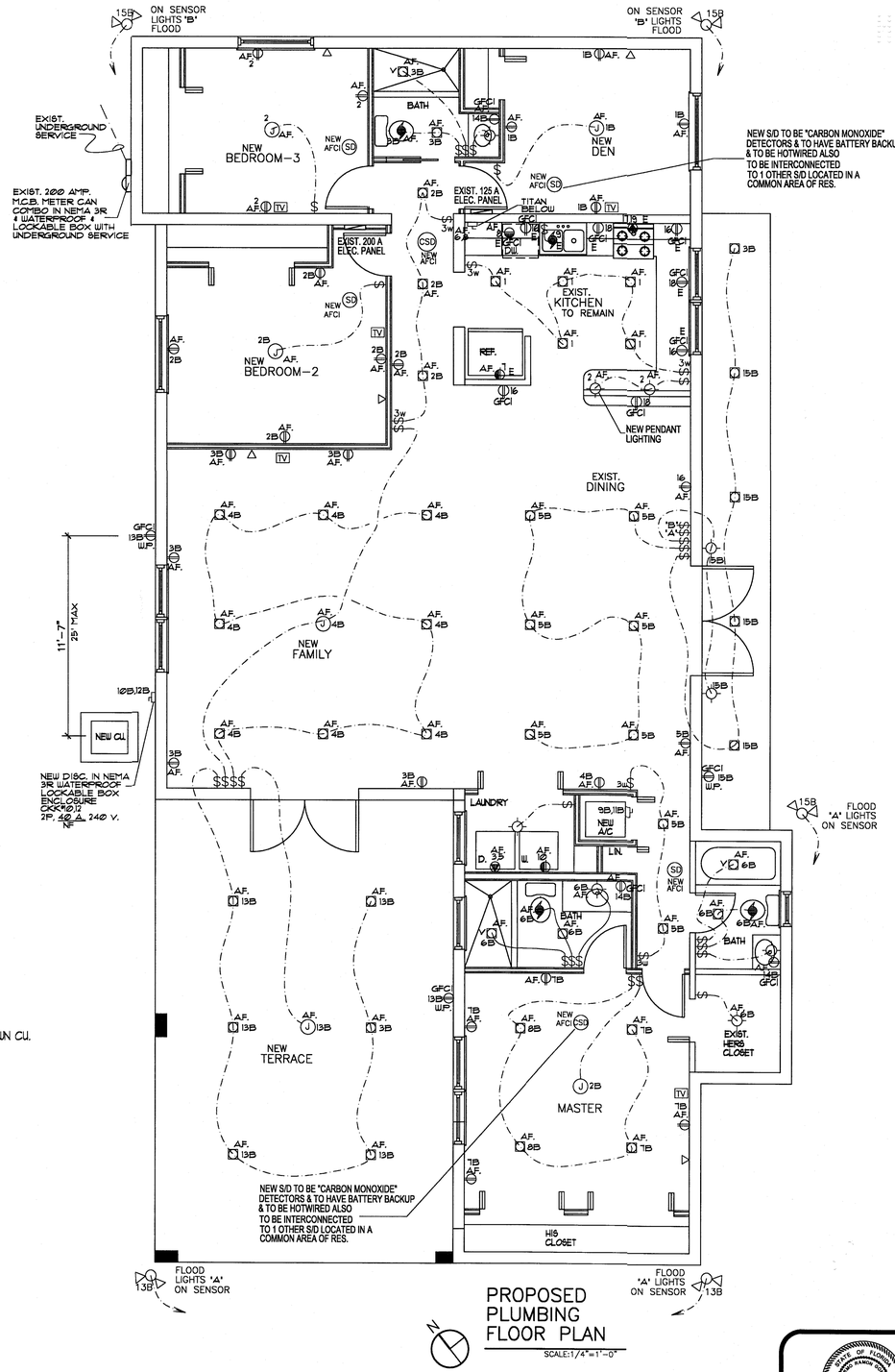

PROPOSED PLUMBING FLOOR PLAN
SCALE: 1/4"=1'-0"

ELECTRICAL LEGEND

	APPLIANCE OUTLET		RECESSED LIGHTING
	DUPLEX OUTLET	V	VAPOR PROOF LIGHT
	50 AMP OUTLET		CEILING MOUNT FIXTURE
△	PHONE OUTLET BY OTHERS MAY VARY IN LOCATION		WALL MOUNT FIXTURE
GFI	GROUND FAULT INTERRUPTER	F	UL-RATED FAN BOX/J BOX
WP	WATER PROOF	SD	110 V./BATT.SMOKE DETECTOR
$	SINGLE POLE SWITCH		EXIT LIGHT
3W	3 WAY SWITCH		ELECTRICAL PANEL
	DISCONNECT SWITCH		METER
	EXHAUST OR MOTOR	TV	CABLE/TV BY OTHERS MAY VARY IN LOCATION

R=RELOCATED W/EXIST. CIRCUIT
N=NEW
E=EXIST. TO REMAIN

NOTE: ALL CIRCUITING SHOWN IS PRIMARY FOR LOAD PURPOSES ONLY. ACTUAL CIRCUITING LAYOUT AND LIGHTING FIXTURE LOCATION & TYPES MAY VARY AS PER ELECTRICAL CONTRACTOR
NOTE: SEPARATE ELECTRICAL SUB PERMIT IS REQ'D. UNDER THIS MASTER PERMIT.

NOTE: 90% OF LAMPS MUST HIGH EFFICIENCY AND AT LEAST 45 LUMENS/W. OR NOT LESS THAN 65 LUMUNS/W. AS PER F.B.C. RE 404

NOTE: arc fault circuit interrupter

1. The overcurrent protection of the new circuits shall be arc fault circuit interrupter combination type circuit breakers.

A) Dwelling Units. All 120–volt, single–phase, 15– and 20–ampere branch circuits supplying outlets or devices installed in dwelling unit kitchens, family rooms, dining rooms, living rooms, parlors, libraries, dens, bedrooms, sunrooms, recreation rooms, closets, hallways, laundry areas, or similar rooms or areas shall be protected by any of the means described in 210.12(A)(1) through (6): *NO A.F.C.I. FOR OUTDOORS*

2. All receptacles 15A and 20A, 125V shall be tamper resistant, according to NEC 406.11.

NOTE: ALL OUTDOOR INSTALLATIONS SHALL COMPLY WITH NEC 110.11, 110.12, 110.26, 110.28, & 358.12

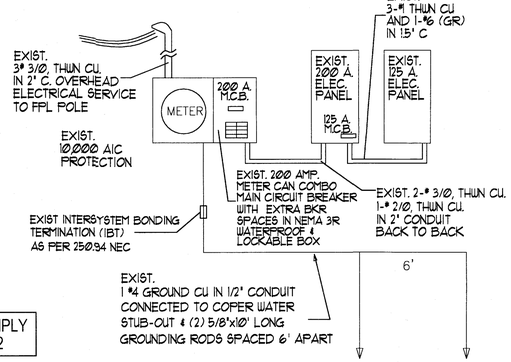

EXIST. RISER DIAGRAM

NOTE CODES IN EFFECT:
FBC 2020, 7th EDITION
ELECTRICAL & NEC 2017

NOTE: ALL SWITCHED LOCATIONS TO HAVE NEUTRAL GROUNDED CIRCUIT CONDUCTORS AS PER 404.2(C) NEC

NOTE: ALL SWITCHES, OUTLETS & LIGHT FIXTURES SHOWN ARE OR MAY VARY IN ACTUAL FIELD CONDITIONS. THIS A DIAGRAM TO SHOW APPROXIMATE LOCATIONS FOR ALL NEW OR REPLACED ELECTRICAL FIXTURES, OUTLETS ETC.

ELECTRICAL SCOPE OF WORK:
REMOVE ANY EXIST. ELECTRICAL IN AREAS BEING DEMOLISHED.
REMOVE & REPLACE ALL ELECTRICAL WIRING IN ALL AREAS.
EXIST. 200 AMP. M.C.B., & 200 & 125 AMP ELECTRICAL PANELS TO REMAIN.
PROVIDE NEW GFCI OUTLETS AT NEW BATH ROOMS AS SHOWN.
PROVIDE ALL NEW LIGHTING,SWITCHES & OUTLETS AT ALL NEW AREAS AS SHOWN.
SEE FLOOR PLAN. PROVIDE NEW SMOKE DETECTORS AT AS SHOWN.
EXIST. UNDERGROUND ELECTRICAL SERVICE TO REMAIN.

NOTE: TRADE CONTRACTOR IS RESPONSIBLE FOR ANY COST EFFECTIVE REVISIONS TO PLANS IF ORIGINAL DESIGN OF APPROVED PLANS ARE NOT FOLLOWED. A DIFFERENT METHOD IN DESIGN MAY BE USED AFTER CONSTRUCTION & PERMIT DOCUMENTS ARE ACTIVE IN FIELD, BUT AGAIN TRADE CONTRACTOR WILL BE RESPONSIBLE FOR ANY INCURRED COSTS DUE TO ANY REQUIRED REVISION WORK ON THE ORIGINAL APPROVED PLANS. ANY AND ALL CHANGES TO PLANS MUST BE APPROVED BY THE ENGINEER OR ARCHITECT OF RECORD & BUILDING DEPT. AND WILL BE BILLED ACCORDINGLY.

CITY OF MIAMI SPRINGS APPROVED FOR PERMITTING
ELECTRICAL INSPECTOR

STATE OF FLORIDA — GUILLERMO RAMON GONZALEZ — AR0013960 — REGISTERED ARCHITECT
Guillermo Ramon Gonzalez
R.A. 13960
STATE OF FLORIDA

NO.	DATE
1	
2	
3	
4	
5	

DESG	DRWN	CHKD	APRV	DATE

PROJECT NAME: ADDITION TO RESIDENCE FOR:
OWNER/PH: AMBAR PREVAL 786-587-7391
ADDRESS: 200 N. ESPLANADE DRIVE MIAMI SPRINGS, FLORIDA 33166
PROJECT ADD: SAME

Guillermo Ramon Gonzalez
9000 SW. 168th Avenue Miami Florida 33196 Ph:305-484-8171
Registered Architect #13960 Ph:786-237-5154 (assistant)

101521

E-1

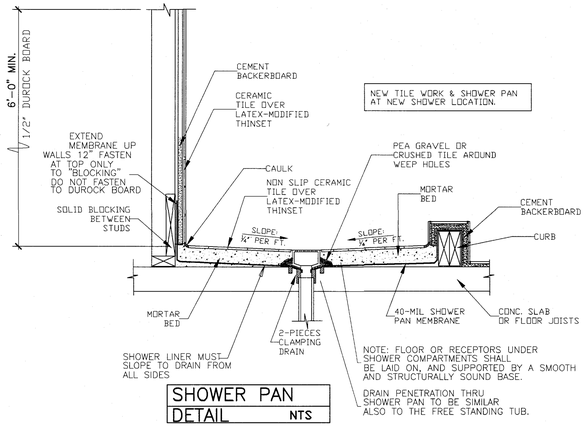

NEW TILE WORK & SHOWER PAN AT NEW SHOWER LOCATION.

SHOWER PAN DETAIL NTS

NOTE: TITAN N-180 (EXISTING TANK LESS W.H.)

LARGE Whole house capacity- 3bed/2bath
4 GPM
Thermostatically control temp on front cover
60% energy savings vs. conventional electric water heaters
99.5% efficient
10 year warranty on water carrying components- 1 year on rest of unit
Space saver
On demand water control- equals unit longevity and savings
For use with hard, soft, well or city water
Problem free installation
Most efficient and practical product of its kind on the market
Steel outer / copper-brass inner casing (no plastic or pvc parts)
UL approved #499
ANSI-Z 10.03 certified
Dimensions: 10" high x 7" wide x 2 3/4" deep
11.4KW- 54 amps- 1 double pole 60 amp breaker required. 1, 6/2 wire line
Dual heating chambers
Simple instructions for installation ease
Made in the USA

PLUMBING SCOPE OF WORK:

ALL NEW PLUMBING WORK IS AT BOTH NEW BATHROOMS.
PROVIDE 2-NEW BATHS, W/ VANITY & LAV. AND NEW FAUCET &
PROVIDE NEW TOILETS AT BOTH NEW BATHROOM AREA.
PROVIDE NEW SHOWER & SHOWER PAN AT BOTH NEW BATHS.
PROVIDE NEW 1" WATER SERVICE FROM METER.
EXIST. TANKLESS WATER HEATER TO REMAIN.
PROVIDE NEW WATER & DRAIN LINES & WATER PIPING &
PROVIDE NEW WATER DISTRIBUTION LINES AS SHOWN.
EXIST. FRONT BATHROOM TO REMAIN.
NEW W & D. LAUNDRY ROOM LOCATION SEE PLAN.
EXISTING MAIN DRAIN LINE AS SHOWN TO REMAIN AS IS.
CONNECT NEW 3" SAN. LINE FROM NEW ADDITION TO EXIST.
MAIN HOUSE DRAIN LINE AT FRONT OF RESIDENCE. SEE SP-1 & P-1.

BATHTUBS AND SHOWER FLOORS AND WALLS ABOVE BATHTUBS WITH INSTALLED SHOWER HEADS AND IN SHOWER COMPARTMENTS SHALL BE FINISHED WITH A NONABSORBENT SURFACE. SUCH WALL SURFACES SHALL EXTEND TO A HEIGHT OF NOT LESS THAN 6' ABOVE THE FLOOR. AS PER FBC R307.
FIBER CEMENT, FIBER-MAT REINFORCED CEMENT GYPSUM BACKERS INSTALLED IN ACCORDANCE WITH MANUFACTURER RECOMMENDATIONS SHALL BE USED AS BACKERS FOR ALL WALL TILE IN TUB AND SHOWER AREA SAND WALL PANELS IN SHOWER AREAS AS PER FBC R702.4.2

PLUMBING NOTES:

1. ALL PLUMBING SHALL BE DONE IN ACCORDANCE WITH (PLUMBING) OF THE "F.B.C." 2020-7th EDITION AND ALL OTHER PERTAINING CODES AND ORDINANCES HAVING JURISDICTION.
2. PLUMBING CONTRACTOR SHALL PAY ALL FEES, INSPECTIONS AND CONNECTION CHARGES REQUIRED.
3. PLUMBING CONTRACTOR SHALL FURNISH AND INSTALL AIR CONDITIONING CONDENSE DRAIN AND TRAP. SEE AIR CONDITIONING PLANS FOR LOCATION OF UNITS AND DRAINS.
4. PLUMBING CONTRACTOR SHALL VERIFY ALL SPACE CONDITIONS AND DIMENSIONS AT JOB SITE PRIOR TO FABRICATION AND INSTALLATION OF MATERIALS AND EQUIPMENT.
5. COORDINATE WORK WITH OTHER TRADES.
6. SUBMIT SHOP DRAWINGS TO ENGINEER FOR APPROVAL OF ALL EQUIPMENT, MATERIALS AND LAYOUTS PRIOR TO INSTALLATION.
7. FURNISH AND INSTALL BATHROOM FIXTURES AS SPECIFIED (BY ENGINEER).
8. PLUMBING CONTRACTOR SHALL GUARANTEE ALL WORK FREE OF DEFECTS IN MATERIAL AND WORKMANSHIP FOR A PERIOD OF ONE YEAR FROM DATE OF ACCEPTANCE.
9. EACH BATHROOM GROUP SHALL BE PROVIDED WITH AIR CHAMBERS AS PER FLO-RIDA BUILDING CODE.
10. PROVIDE SHUTOFF VALVE FOR EACH FIXTURE.
11. WHEREVER DISSIMILAR METALS ARE TO BE JOINED, A DI- ELECTRIC FITTING SHALL BE PROVIDED TO CONNECT BOTH TYPES OF PIPES.
12. PIPES.
    A. COLD WATER PIPING DOWNSTREAM OF WATER METER SHALL BE TYPE "L" COPPER BELOW GROUND AND TYPE "M" COPPER ABOVE GROUND.
    B. SANITARY WASTE AND VENT 4" AND SMALLER SHALL BE PVC SOIL PIPE.
    C. CONDENSE DRAIN PIPE SHALL BE SCHEDULE 40, PVC PIPE AND FITTINGS.
    D. STORM LINES SHALL BE SAME AS FOR SANITARY SYSTEM.
13. THERE SHALL BE NO JOINTS IN WATER LINES BELOW SLAB.
14. PROVIDE ANTI-SCALD DIVERTS @ ALL SHOWERS AND TUBS.
15. WATER SERVICE LINE TO STRUCTURE MAY BE CPVC MATERIAL UP TO CONTROL VALVE. AFTER THAT TO WATER HEATER SOURCE AND OTHER DISTRIBUTION LINE TO BE COPPER. AS PER ASTM D 2846; ASTM F 441; ASTM F 442; CSA B 137.6
16. FBC P2903.2 MAXIMUM FLOW OF WATER CONPSUMPTION. AS PER MIAMI DADE COUNTY ORDINANCE SEC. 8-31 PLUMBING FIXTURES SHALL MEET THE LOCAL WATER FLOW RESTRICTIONS ADOPTED BY MIAMI DADE COUNTYWATER AND SEWER (WATER CLOSET 1.28gpm, LAV. 1.5gpm, SHOWER HEADS 1.5gpm AND KITCHEN FAUCETS 1.5 gpm.
17. FBC P2903.5 WATER HAMMER. THE FLOW VELOCITY OF THE WATER DISTRIBUTIONSYSTEM SHALL BE CONTROLLED TO REDUCE THE POSSIBILTY OF WATER HAMMER. A WATER HAMMER ARRESTOR SHALL BE INSTALLED WHERE QUICK-CLOSING VALVES ARE USED. WATER HAMMER ARRESTORS SHALL BE INSTALLED IN ACCORDANCE WITH MANUFACTURERS SPECIFICATIONS. WATER HAMMER ARRESTORS SHALL CONFORM TO ASSE 1010

TABLE 604.4
MAXIMUM FLOW RATES AND CONSUMPTION FOR PLUMBING FIXTURES, FIXTURE FITTINGS AND APPLIANCES

PLUMBING FIXTURE OR FIXTURE FITTING	MAXIMUM FLOW RATE (b)
Lavatory, private	1.5 gpm at 60 psi
Lavatory, public, (metering)	0.25 gallon per metering cycle
Shower head (a)	1.5 gpm at 60 psi
Sink faucet	1.5 gpm at 60 psi
Urinal	>>Waterless or 0.5 gallon flushing cycle
Water Closet	1.28 gallons per flushing cycle
Dishwasher (residential)	6.5 gallons per cycle or less (Energy Star/Water Sense Certified) ©
Dishwasher (commercial)	Less than 1.2 gallons per rack for fill and dump machines and less Than 0.9 gallons per rack for all other types of machines.
Dishwasher (under the counter machines)	1.0 gallon or less per rack for high-temperature machines and 1.7 gallons per rack for low-temperature machines
Washing machine	Water factor of 8 or lower (Energy Star / Water Sense Certified) ©

For SI:
1 gallon = 3.785 L
1 gallon per minute = 3.785 L/m
1 pound per square inch = 6.895 kPa.
(a) A hand-held shower spray is a shower head.
(b) Consumption tolerances shall be determined from referenced standards.
(c) Water factor in gallons per cycle per cubic foot.

(B)

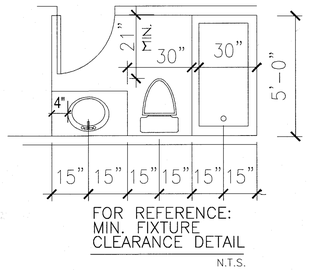

FOR REFERENCE: MIN. FIXTURE CLEARANCE DETAIL
N.T.S.

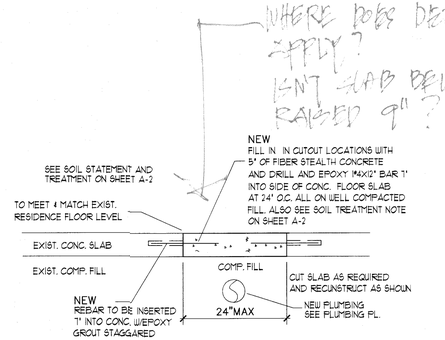

(B) SLAB CONNECTION DETAIL SCALE:1/2"=1'-0"

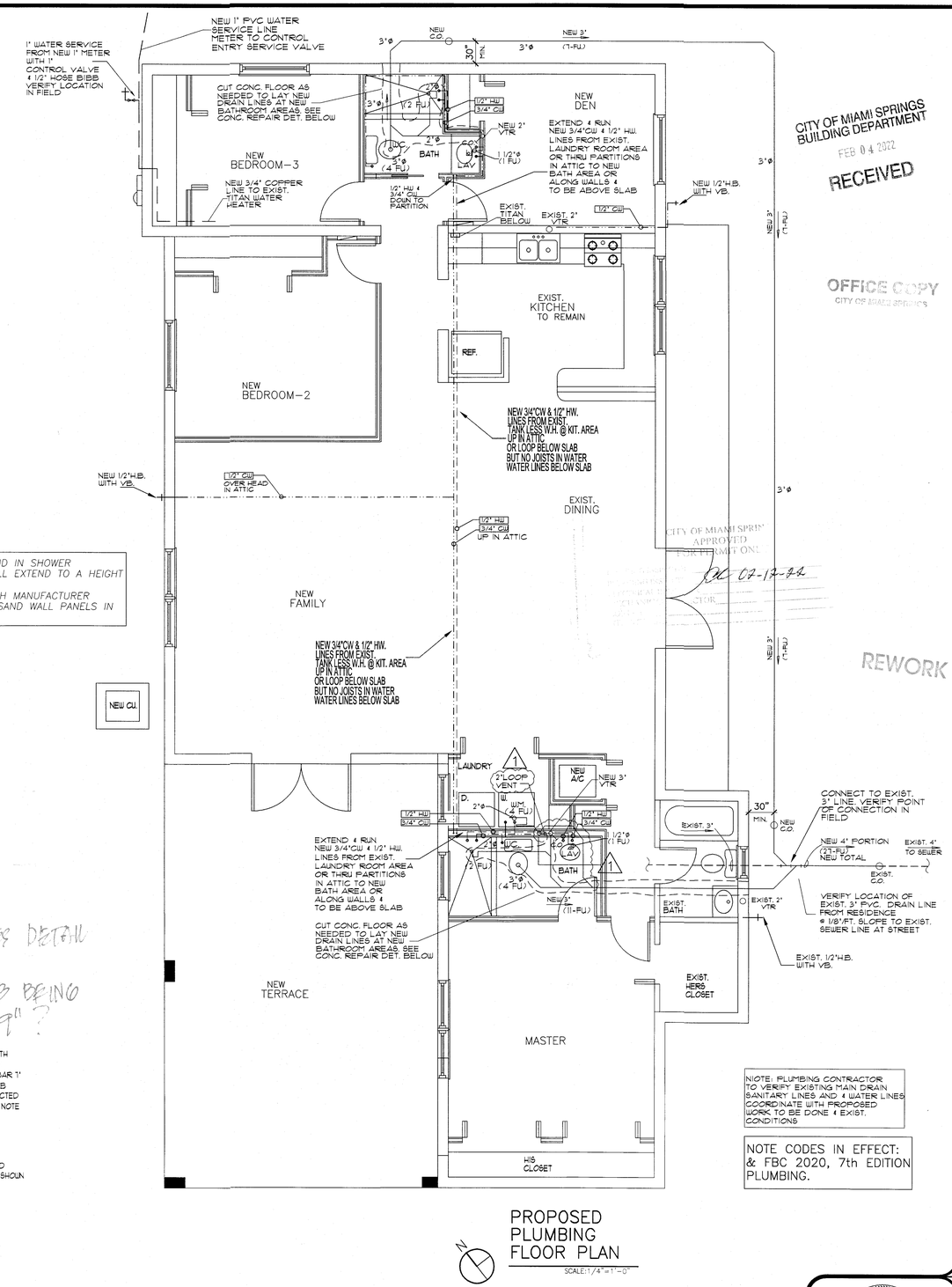

NIOTE: PLUMBING CONTRACTOR TO VERIFY EXISTING MAIN DRAIN SANITARY LINES AND & WATER LINES COORDINATE WITH PROPOSED WORK TO BE DONE & EXIST. CONDITIONS

NOTE CODES IN EFFECT: & FBC 2020, 7th EDITION PLUMBING.

PROPOSED PLUMBING FLOOR PLAN
SCALE:1/4"=1'-0"

NOTE: TRADE CONTRACTOR IS RESPONSIBLE FOR ANY COST EFFECTIVE REVISIONS TO PLANS IF ORIGINAL DESIGN OF APPROVED PLANS ARE NOT FOLLOWED. A DIFFERENT METHOD IN DESIGN MAY BE USED AFTER CONSTRUCTION & PERMIT DOCUMENTS ARE ACTIVE IN FIELD, BUT AGAIN TRADE CONTRACTOR WILL BE RESPONSIBLE FOR ANY INCURRED COSTS DUE TO ANY REQUIRED REVISION WORK ON THE ORIGINAL APPROVED PLANS. ANY AND ALL CHANGES TO PLANS MUST BE APPROVED BY THE ENGINEER OR ARCHITECT OF RECORD & BUILDING DEPT. AND WILL BE BILLED ACCORDINGLY.

CITY OF MIAMI SPRINGS BUILDING DEPARTMENT
FEB 04 2022
RECEIVED

OFFICE COPY
CITY OF MIAMI SPRINGS

CITY OF MIAMI SPRINGS APPROVED FOR PERMIT ONLY
BY 02-12-22

REWORK

NO.	DATE
1	2-1-22 REVISED LAUNDRY WET VENT

PROJECT NAME: ADDITION TO RESIDENCE FOR:
OWNER/PH: AMBAR PREVAL 786-587-7391
ADDRESS: 200 N. ESPLANADE DRIVE MIAMI SPRINGS, FLORIDA 33166
PROJECT ADD: SAME

DESG | DRWN | CHKD | APRV | DATE

Guillermo Ramon Gonzalez
9000 SW. 168th Avenue Miami Florida 33196 Ph:305-484-8171
Registered Architect #13960 Ph:786-237-5154 (assistant)

Guillermo Ramon Gonzalez
R.A. 13960
STATE OF FLORIDA

101521

P-1

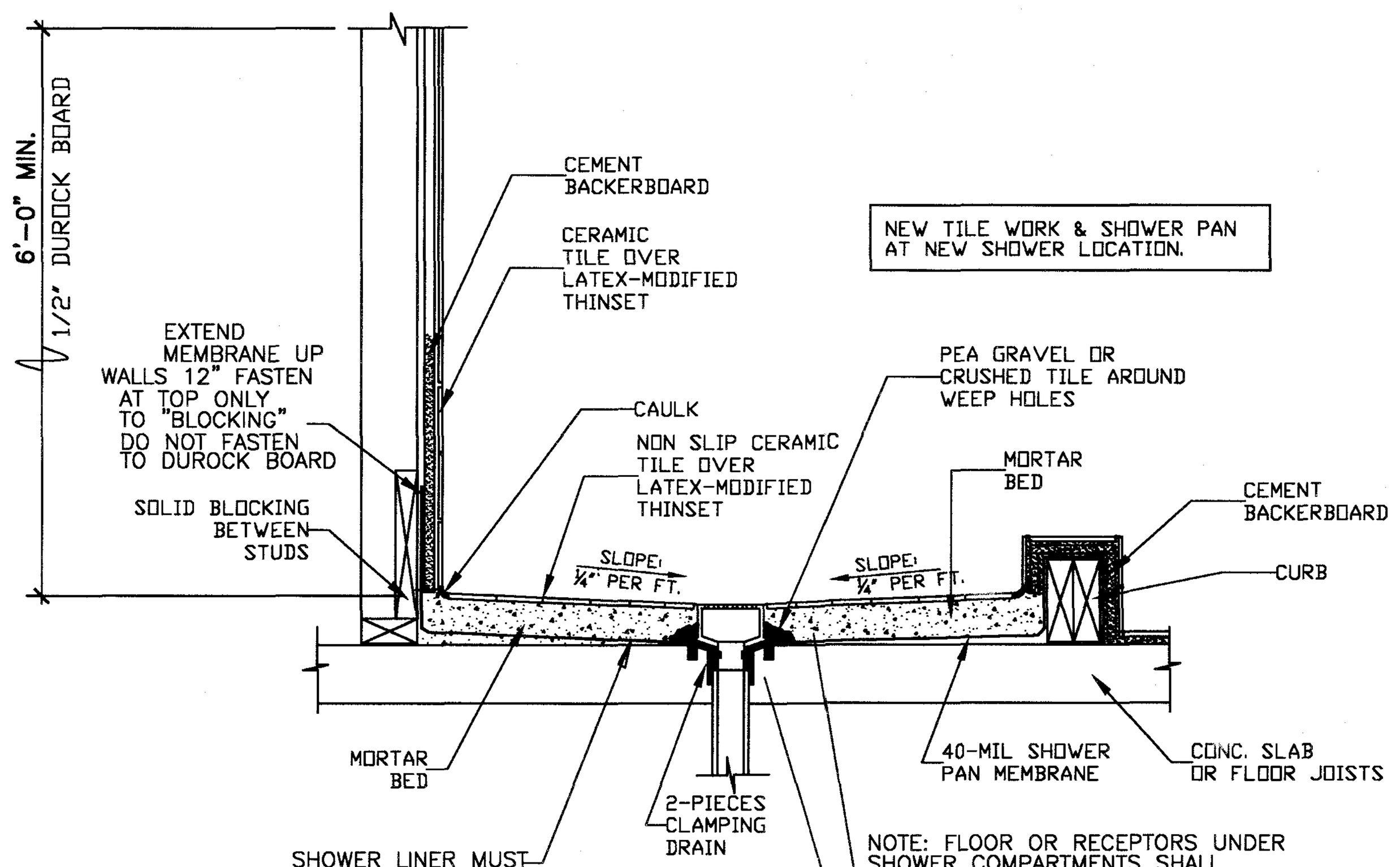

SHOWER PAN DETAIL NTS

NOTE: TITAN N-180 (EXISTING TANK LESS W.H.)

LARGE Whole house capacity- 3bed/2bath
4 GPM
Thermostatically control temp on front cover
60% energy savings vs. conventional electric water heaters
99.5% efficient
10 year warranty on water carrying components- 1 year on rest of unit
Space saver
On demand water control- equals unit longevity and savings
For use with hard, soft, well or city water
Problem free installation
Most efficient and practical product of its kind on the market
Steel outer / copper-brass inner casing (no plastic or pvc parts)
UL approved #499
ANSI-Z 10.03 certified
Dimensions: 10" high x 7" wide x 2 3/4" deep
11.4KW- 54 amps- 1 double pole 60 amp breaker required. 1, 6/2 wire line
Dual heating chambers
Simple instructions for installation ease
Made in the USA

PLUMBING SCOPE OF WORK:

ALL NEW PLUMBING WORK IS AT BOTH NEW BATHROOMS.
PROVIDE 2-NEW BATHS, W/ VANITY & LAV. AND NEW FAUCET &
PROVIDE NEW TOILETS AT BOTH NEW BATHROOM AREA.
PROVIDE NEW SHOWER & SHOWER PAN AT BOTH NEW BATHS.
PROVIDE NEW 1" WATER SERVICE FROM METER.
EXIST. TANKLESS WATER HEATER TO REMAIN.
PROVIDE NEW WATER & DRAIN LINES & WATER PIPING &
PROVIDE NEW WATER DISTRIBUTION LINES AS SHOWN.
EXIST. FRONT BATHROOM TO REMAIN.
NEW W.& D. LAUNDRY ROOM LOCATION SEE PLAN.
EXISTING MAIN DRAIN LINE AS SHOWN TO REMAIN AS IS.
CONNECT NEW 3" SAN. LINE FROM NEW ADDITION TO EXIST.
MAIN HOUSE DRAIN LINE AT FRONT OF RESIDENCE. SEE SP-1 & P-1.

BATHTUBS AND SHOWER FLOORS AND WALLS ABOVE BATHTUBS WITH INSTALLED SHOWER HEADS AND IN SHOWER COMPARTMENTS SHALL BE FINISHED WITH A NONABSORBENT SURFACE. SUCH WALL SURFACES SHALL EXTEND TO A HEIGHT OF NOT LESS THAN 6' ABOVE THE FLOOR. AS PER FBC R307.
FIBER CEMENT, FIBER-MAT REINFORCED CEMENT GYPSUM BACKERS INSTALLED IN ACCORDANCE WITH MANUFACTURER RECOMMENDATIONS SHALL BE USED AS BACKERS FOR ALL WALL TILE IN TUB AND SHOWER AREA SAND WALL PANELS IN SHOWER AREAS AS PER FBC R702.4.2

PLUMBING NOTES:

1. ALL PLUMBING SHALL BE DONE IN ACCORDANCE WITH (PLUMBING) OF THE "F.B.C." 2020-7th EDITION AND ALL OTHER PERTAINING CODES AND ORDINANCES HAVING JURISDICTION.
2. PLUMBING CONTRACTOR SHALL PAY ALL FEES, INSPECTIONS AND CONNECTION CHARGES REQUIRED.
3. PLUMBING CONTRACTOR SHALL FURNISH AND INSTALL AIR CONDITIONING CONDENSE DRAIN AND TRAP. SEE AIR CONDITIONING PLANS FOR LOCATION OF UNITS AND DRAINS.
4. PLUMBING CONTRACTOR SHALL VERIFY ALL SPACE CONDITIONS AND DIMENSIONS AT JOB SITE PRIOR TO FABRICATION AND INSTALLATION OF MATERIALS AND EQUIPMENT.
5. COORDINATE WORK WITH OTHER TRADES.
6. SUBMIT SHOP DRAWINGS TO ENGINEER FOR APPROVAL OF ALL EQUIPMENT, MATERIALS AND LAYOUTS PRIOR TO INSTALLATION.
7. FURNISH AND INSTALL BATHROOM FIXTURES AS SPECIFIED (BY ENGINEER).
8. PLUMBING CONTRACTOR SHALL GUARANTEE ALL WORK FREE OF DEFECTS IN MATERIAL AND WORKMANSHIP FOR A PERIOD OF ONE YEAR FROM DATE OF ACCEPTANCE.
9. EACH BATHROOM GROUP SHALL BE PROVIDED WITH AIR CHAMBERS AS PER FLO-RIDA BUILDING CODE.
10. PROVIDE SHUTOFF VALVE FOR EACH FIXTURE.
11. WHEREVER DISSIMILAR METALS ARE TO BE JOINED, A DI- ELECTRIC FITTING SHALL BE PROVIDED TO CONNECT BOTH TYPES OF PIPES.
12. PIPES.
    A. COLD WATER PIPING DOWNSTREAM OF WATER METER SHALL BE TYPE "L" COPPER BELOW GROUND AND TYPE "M" COPPER ABOVE GROUND.
    B. SANITARY WASTE AND VENT 4" AND SMALLER SHALL BE PVC SOIL PIPE.
    C. CONDENSE DRAIN PIPE SHALL BE SCHEDULE 40, PVC PIPE AND FITTINGS.
    D. STORM LINES SHALL BE SAME AS FOR SANITARY SYSTEM.
13. THERE SHALL BE NO JOINTS IN WATER LINES BELOW SLAB.
14. PROVIDE ANTI-SCALD DIVERTS @ ALL SHOWERS AND TUBS.
15. WATER SERVICE LINE TO STRUCTURE MAY BE CPVC MATERIAL UP TO CONTROL VALVE. AFTER THAT TO WATER HEATER SOURCE AND OTHER DISTRIBUTION LINE TO BE COPPER. AS PER ASTM D 2846; ASTM F 441; ASTM F 442; CSA B 137.6

16. FBC P2903.2 MAXIMUM FLOW OF WATER CONPSUMPTION. AS PER MIAMI DADE COUNTY ORDINANCE SEC. 8-31 PLUMBING FIXTURES SHALL MEET THE LOCAL WATER FLOW RESTRICTIONS ADOPTED BY MIAMI DADE COUNTYWATER AND SEWER (WATER CLOSET 1.28gpm, LAV. 1.5gpm, SHOWER HEADS 1.5gpm AND KITCHEN FAUCETS 1.5 gpm.

17. FBC P2903.5 WATER HAMMER. THE FLOW VELOCITY OF THE WATER DISTRIBUTIONSYSTEM SHALL BE CONTROLLED TO REDUCE THE POSSIBILTY OF WATER HAMMER. A WATER HAMMER ARRESTOR SHALL BE INSTALLED WHERE QUICK-CLOSING VALVES ARE USED. WATER HAMMER ARRESTORS SHALL BE INSTALLED IN ACCORDANCE WITH MANUFACTURERS SPECIFICATIONS. WATER HAMMER ARRESTORS SHALL CONFORM TO ASSE 1010

TABLE 604.4
MAXIMUM FLOW RATES AND CONSUMPTION FOR PLUMBING FIXTURES, FIXTURE FITTINGS AND APPLIANCES

PLUMBING FIXTURE OR FIXTURE FITTING	MAXIMUM FLOW RATE (b)
Lavatory, private	1.5 gpm at 60 psi
Lavatory, public, (metering)	0.25 gallon per metering cycle
Shower head (a)	1.5 gpm at 60 psi
Sink faucet	1.5 gpm at 60 psi
Urinal	>>Waterless or 0.5 gallon flushing cycle
Water Closet	1.28 gallons per flushing cycle
Dishwasher (residential)	6.5 gallons per cycle or less (Energy Star/Water Sense Certified) ©
Dishwasher (commercial)	Less than 1.2 gallons per rack for fill and dump machines and less Than 0.9 gallons per rack for all other types of machines.
Dishwasher (under the counter machines)	1.0 gallon or less per rack for high-temperature machines and 1.7 gallons per rack for low-temperature machines
Washing machine	Water factor of 8 or lower (Energy Star / Water Sense Certified) ©

For SI:
1 gallon = 3.785 L
1 gallon per minute = 3.785 L/m
1 pound per square inch = 6.895 kPa.
(a) A hand-held shower spray is a shower head.
(b) Consumption tolerances shall be determined from referenced standards.
(c) Water factor in gallons per cycle per cubic foot.

(B)

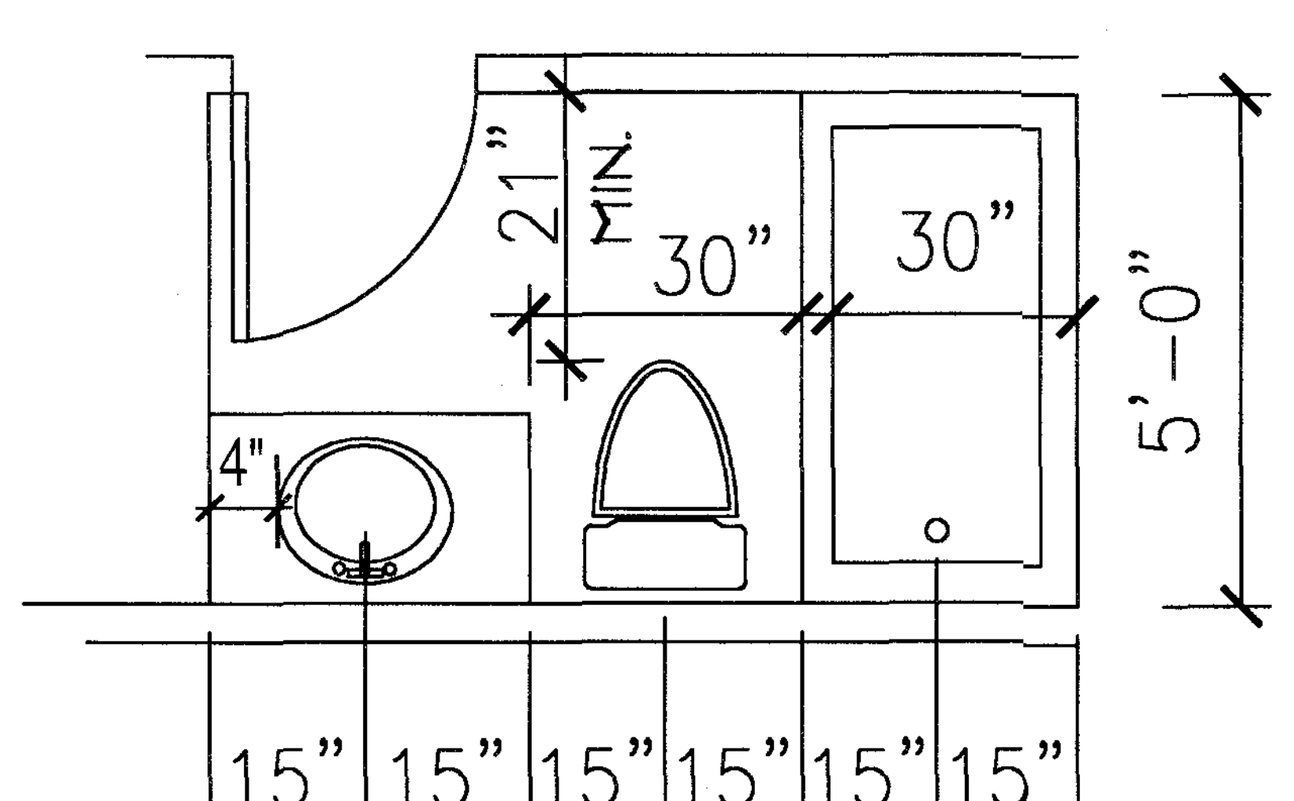

FOR REFERENCE:
MIN. FIXTURE
CLEARANCE DETAIL
N.T.S.

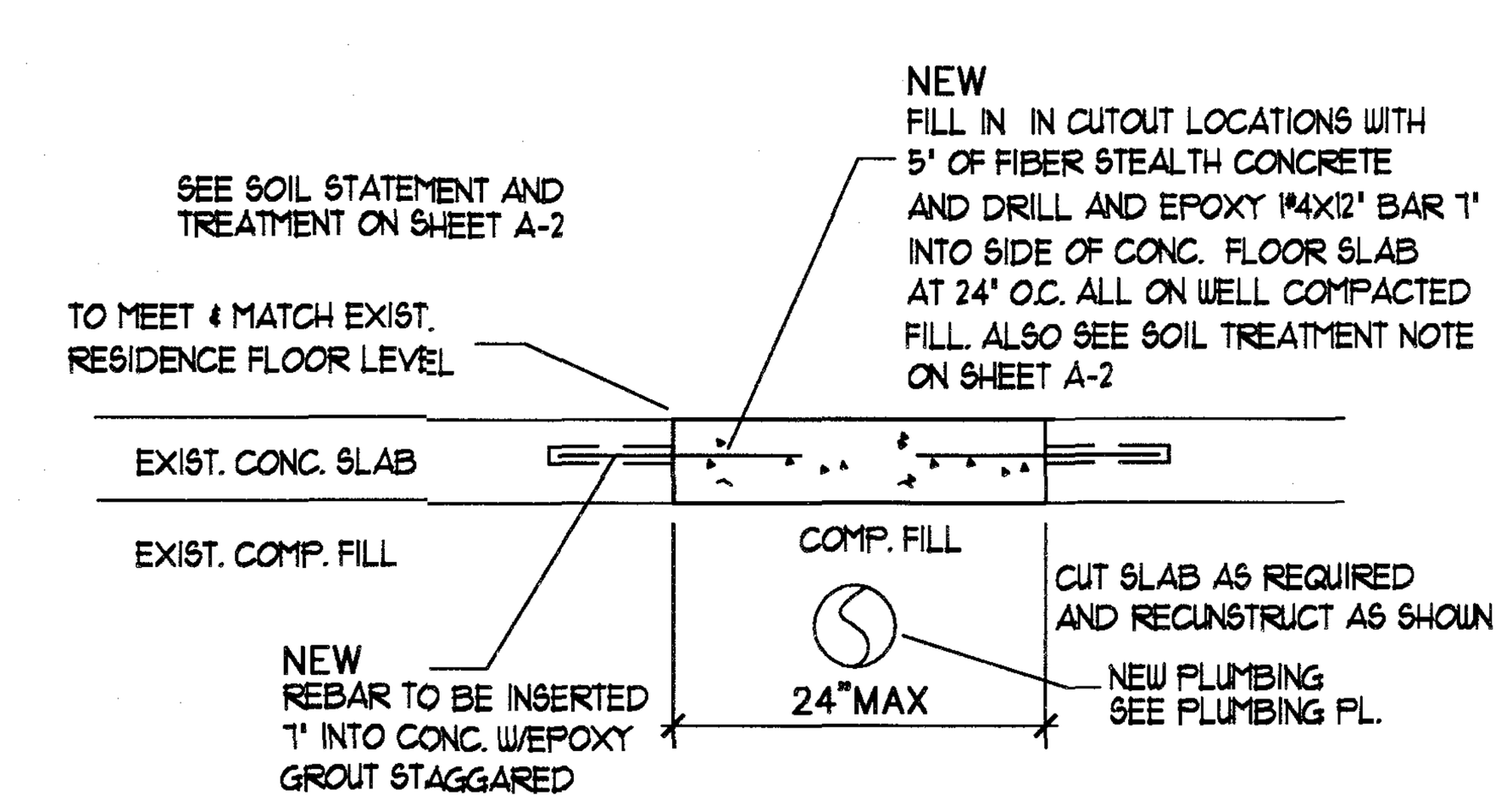

(B) SLAB CONNECTION DETAIL SCALE:1/2'=1'-0'

NOTE: TRADE CONTRACTOR IS RESPONSIBLE FOR ANY COST EFFECTIVE REVISIONS TO PLANS IF ORIGINAL DESIGN OF APPROVED PLANS ARE NOT FOLLOWED. A DIFFERENT METHOD IN DESIGN MAY BE USED AFTER CONSTRUCTION & PERMIT DOCUMENTS ARE ACTIVE IN FIELD, BUT AGAIN TRADE CONTRACTOR WILL BE RESPONSIBLE FOR ANY INCURRED COSTS DUE TO ANY REQUIRED REVISION WORK ON THE ORIGINAL APPROVED PLANS. ANY AND ALL CHANGES TO PLANS MUST BE APPROVED BY THE ENGINEER OR ARCHITECT OF RECORD & BUILDING DEPT. AND WILL BE BILLED ACCORDINGLY.

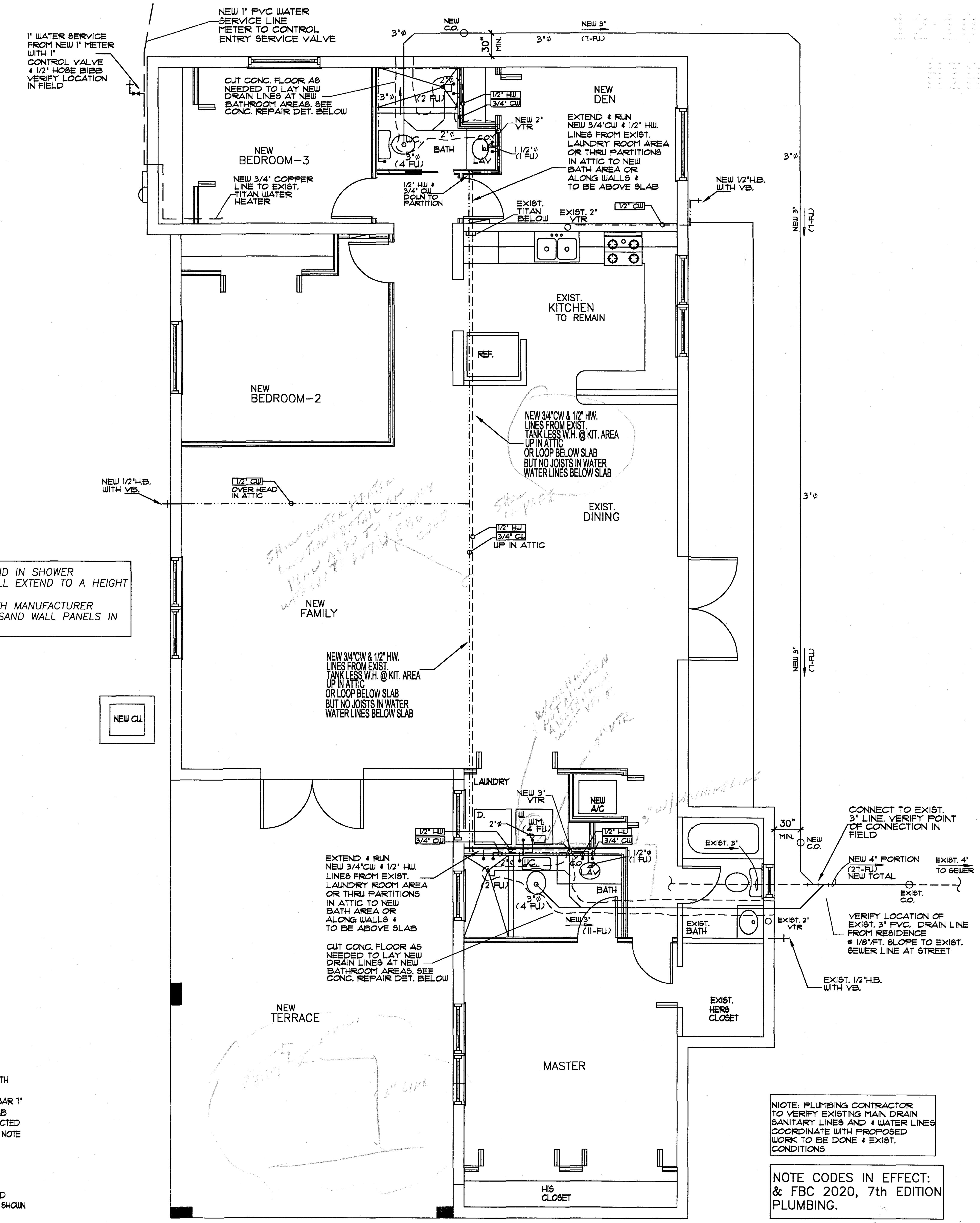

PROPOSED
PLUMBING
FLOOR PLAN
SCALE:1/4"=1'-0"

NOTE: PLUMBING CONTRACTOR TO VERIFY EXISTING MAIN DRAIN SANITARY LINES AND & WATER LINES COORDINATE WITH PROPOSED WORK TO BE DONE & EXIST. CONDITIONS

NOTE CODES IN EFFECT:
& FBC 2020, 7th EDITION PLUMBING.

CITY OF MIAMI SPRINGS APPROVED FOR PERMIT ONLY — VOID

Guillermo Ramon Gonzalez
R.A. 13960
STATE OF FLORIDA

PROJECT NAME: ADDITION TO RESIDENCE FOR:
OWNER/PH: AMBAR PREVAL 786-587-7391
ADDRESS:200 N. ESPLANADE DRIVE MIAMI SPRINGS, FLORIDA 33166
PROJECT ADD: SAME

DESG	DRWN	CHKD	APRV	DATE
•	•	•	•	•

NO.	DATE
1	•
2	•
3	•
4	•

Guillermo Ramon Gonzalez
9000 SW. 168th Avenue Miami Florida 33196 Ph:305-484-8171
Registered Architect #13960 Ph:786-237-5154 (assistant)

101521

P-1

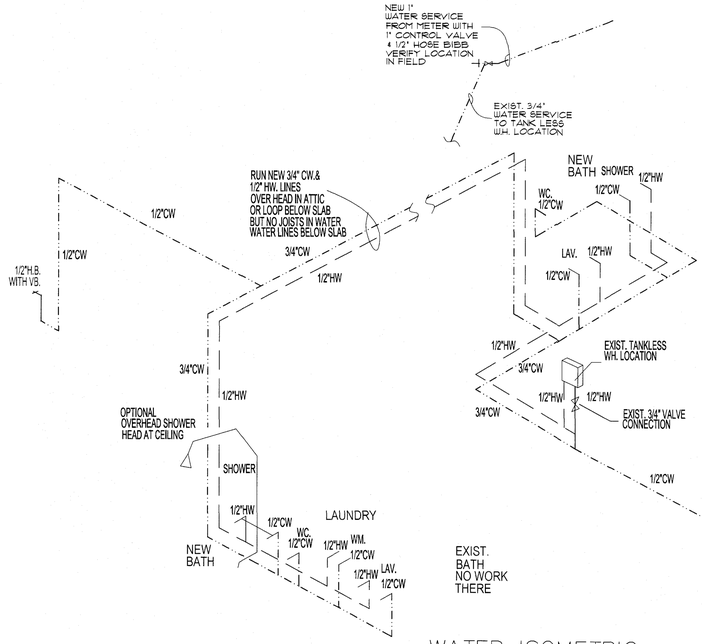

WATER ISOMETRIC N.T.S.

CITY OF MIAMI SPRINGS
BUILDING DEPARTMENT
FEB 04 2022
RECEIVED

OFFICE COPY
CITY OF MIAMI SPRINGS

REWORK

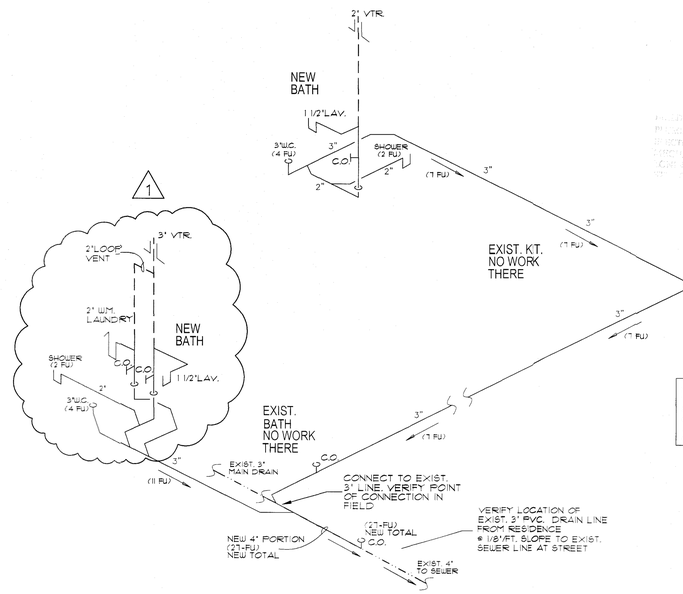

SEWER ISOMETRIC N.T.S.

NOTE: PLUMBING CONTRACTOR TO VERIFY EXISTING MAIN DRAIN SANITARY LINES AND COORDINATE WITH PROPOSED WORK TO BE DONE & EXIST. CONDITIONS

CITY OF MIAMI SPRINGS
APPROVED
FOR PERMIT ONLY
BUILDING INSPECTOR
PLUMBING INSPECTOR
ELECTRICAL INSPECTOR
MECHANICAL INSPECTOR
ZONING INSPECTOR
DATE 02-12-22

NOTE: CPVC MAY BE USED FOR WATER SERVICE LINES IN LIEU OF COPPER. CPVC IS NOT TO BE USED FOR DISTRIBUTION LINES.

NOTE: PLUMBING CONTRACTOR TO VERIFY EXISTING DRAIN LINES, SANITARY LINE, FOR NEW TO EXIST. TIE IN LOCATIONS AT BOTH AREAS INVOLVING THE PROPOSED PLUMBING WORK

NOTE: ALL COLD & HOT WATER LINES TO BE 1/2" AT ALL ALL FIXTURE BRANCHES (TYP.)

PROVIDE FIXTURE CONTROL VALVE @ ALL FIXTURES AS PER 'F.B.C.' PLUMBING

NOTE: ALL WATER LINES TO BE IN ABOVE SLAB AND IN PARTITIONS NO WATER LINES BELOW SLAB

NOTE:

ANY 2" OR LESS SAN. OR CONDENSATE LINE TO BE AT 1/4" PER FT. SLOPE.

ANY 3" OR GREATER SAN. LINE TO BE AT 1/8" PER FT. SLOPE.

DENOTE SLOPE/FLOW

BATHTUBS AND SHOWER FLOORS AND WALLS ABOVE BATHTUBS WITH INSTALLED SHOWER HEADS AND IN SHOWER COMPARTMENTS SHALL BE FINISHED WITH A NONABSORBENT SURFACE. SUCH WALL SURFACES SHALL EXTEND TO A HEIGHT OF NOT LESS THAN 6' ABOVE THE FLOOR, AS PER FBC R307.
FIBER CEMENT, FIBER-MAT REINFORCED CEMENT GYPSUM BACKERS INSTALLED IN ACCORDANCE WITH MANUFACTURER RECOMMENDATIONS SHALL BE USED AS BACKERS FOR ALL WALL TILE IN TUB AND SHOWER AREA SAND WALL PANELS IN SHOWER AREAS AS PER FBC R702.4.2

NO.	DATE	DESC	DRWN	CHKD	APRV	DATE
1	2-1-22	REVISED LAUNDRY JET VENT				

PROJECT NAME: ADDITION TO RESIDENCE FOR:
OWNER/PH: AMBAR PREVAL 786-587-7391
ADDRESS:200 N. ESPLANADE DRIVE MIAMI SPRINGS, FLORIDA 33166
PROJECT ADD: SAME

Guillermo Ramon Gonzalez
9000 SW. 168th Avenue Miami Florida 33196 Ph:305-484-8171
Registered Architect #13960 Ph:786-237-5154 (assistant)

Guillermo Ramon Gonzalez
R.A. 13960
STATE OF FLORIDA

101521

P-2

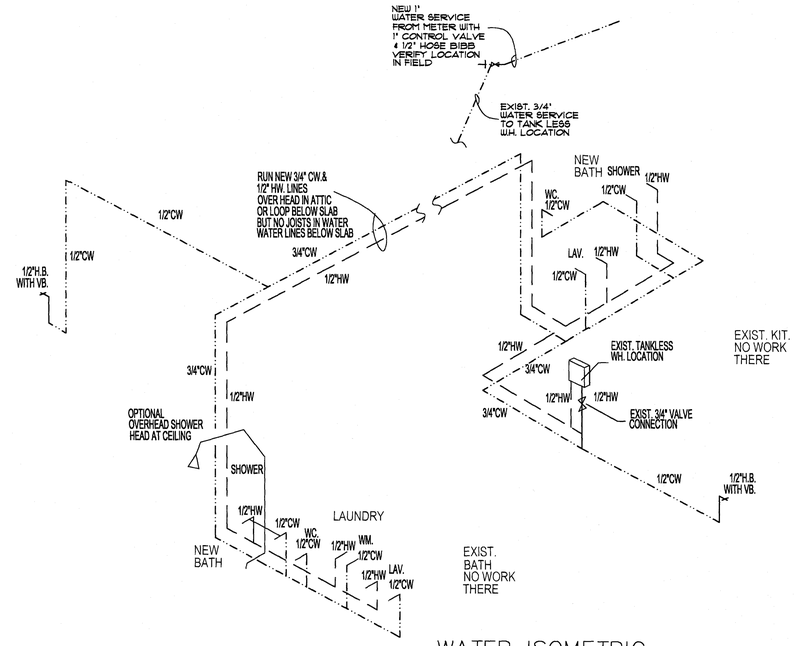

WATER ISOMETRIC N.T.S.

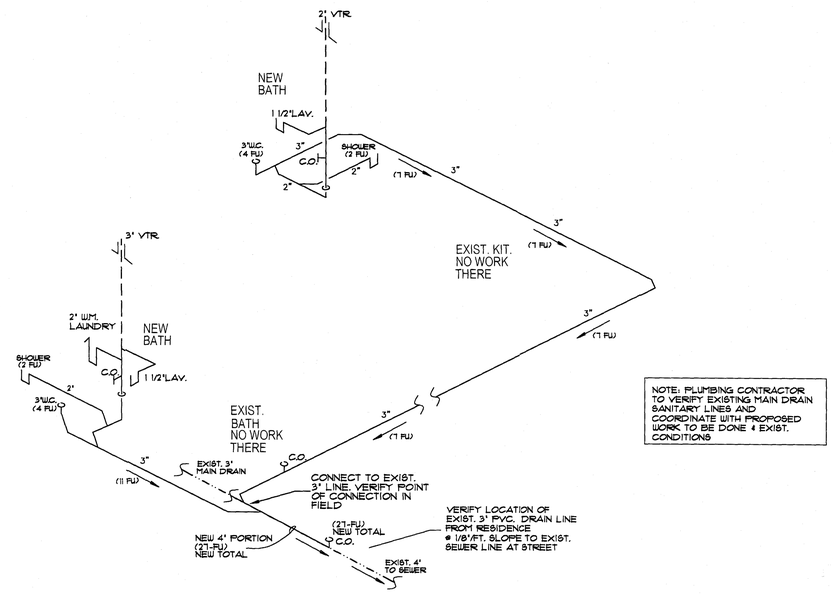

SEWER ISOMETRIC N.T.S.

NOTE: PLUMBING CONTRACTOR TO VERIFY EXISTING MAIN DRAIN SANITARY LINES AND COORDINATE WITH PROPOSED WORK TO BE DONE & EXIST. CONDITIONS

NOTE: CPVC MAY BE USED FOR WATER SERVICE LINES IN LIEU OF COPPER. CPVC IS NOT TO BE USED FOR DISTRIBUTION LINES.

NOTE: PLUMBING CONTRACTOR TO VERIFY EXISTING DRAIN LINES SANITARY LINE, FOR NEW TO EXIST. TIE IN LOCATIONS AT BOTH AREAS INVOLVING THE PROPOSED PLUMBING WORK

NOTE: ALL COLD & HOT WATER LINES TO BE 1/2" AT ALL ALL FIXTURE BRANCHES (TYP)

PROVIDE FIXTURE CONTROL VALVE @ ALL FIXTURES AS PER "F.B.C." PLUMBING

NOTE: ALL WATER LINES TO BE IN ABOVE SLAB AND IN PARTITIONS NO WATER LINES BELOW SLAB

NOTE:

ANY 2" OR LESS SAN. OR CONDENSATE LINE TO BE AT 1/4" PER FT. SLOPE.

ANY 3" OR GREATER SAN. LINE TO BE AT 1/8" PER FT. SLOPE.

→ DENOTE SLOPE/FLOW

BATHTUBS AND SHOWER FLOORS AND WALLS ABOVE BATHTUBS WITH INSTALLED SHOWER HEADS AND IN SHOWER COMPARTMENTS SHALL BE FINISHED WITH A NONABSORBENT SURFACE. SUCH WALL SURFACES SHALL EXTEND TO A HEIGHT OF NOT LESS THAN 6' ABOVE THE FLOOR. AS PER FBC R307.
FIBER CEMENT, FIBER-MAT REINFORCED CEMENT GYPSUM BACKERS INSTALLED IN ACCORDANCE WITH MANUFACTURER RECOMMENDATIONS SHALL BE USED AS BACKERS FOR ALL WALL TILE IN TUB AND SHOWER AREA SAND WALL PANELS IN SHOWER AREAS AS PER FBC R702.4.2

CITY OF MIAMI SPRINGS APPROVED FOR PERMIT ONLY

STATE OF FLORIDA GUILLERMO RAMON GONZALEZ A70013960 Seal REGISTERED ARCHITECT

Guillermo Ramon Gonzalez
R.A. 13960
STATE OF FLORIDA

NO.	DATE
1	
2	
3	
4	

DESG
DRWN
CHKD
APRV
DATE

PROJECT NAME: ADDITION TO RESIDENCE FOR:
OWNER/PH: AMBAR PREVAL 786-587-7391
ADDRESS:200 N. ESPLANADE DRIVE MIAMI SPRINGS, FLORIDA 33166
PROJECT ADD: SAME

Guillermo Ramon Gonzalez
9000 SW. 168th Avenue Miami Florida 33196 Ph:305-484-8171
Registered Architect #13960 Ph:786-237-5154 (assistant)

101521

P-2

PLUMBING PERMIT

City of Miami Springs

201 Westward Drive
Miami Springs, Florida 33166
(305) 805-5030

PERMIT NUMBER
RES23-1366

PERMIT TYPE: **PLUMBING** PERMIT SUB TYPE : **RENOVATION**	Issued Date: **11/17/2023** Expired Date: **5/15/2024**	TAX MAP NO: **05-3118-016-1590** BLDG USE GROUP:
JOB ADDRESS: **200 ESPLANADE DRIVE** DESCRIPTION: **PLUMBING FOR BUILDING**		
ZONED AS: TOTAL WORK VALUE: **$0.00**	TOTAL SQFT: **0** TYPE OF CONSTRUCTION:	
OWNER: **JOVANY JIMENEZ & AMBAR SARA PREVAL** MAILING ADDRESS: **200 N ESPLANADE DR MIAMI SPRINGS, FL 33166**		PHONE: **(786)587-7391** FAX:
CONTRACTOR: **K MILLER PLUMBING INC** MAILING ADDRESS: **18821 NW 28 PLACE OPA LOCKA, FL 33056**		PHONE: **(305)753-4010** FAX:

FEES

DESCRIPTION	ACCOUNT	QUANTITY	PAID AMOUNT
DBPR	145-0000-217.60-00	0	$2.25
DCA	145-0000-217-50-00	0	$2.00
PLUMBING PERMIT FEE	145-0000-329-02-00	0	$150.00
SCANNING	145-0000-220.27-00	0	$1.00
TECHNOLOGY	145-0000-220.26-00	0	$15.00
			TOTAL: $170.25

ALL WORK TO CONFORM TO THE CURRENT EDITION OF THE INTERNATIONAL BUILDING CODE (IBC).
NEXT DAY INSPECTION REQUESTS MUST BE IN BEFORE 3 P.M.
NEXT DAY INSPECTION BY BLD OFFICICAL MUST BE IN BY 12 NOON

Building Official:

Issued By: **NATHALIE BAEZ**

CITY OF MIAMI SPRINGS
BUILDING DEPARTMENT
201 Westward Drive, Second Floor
Miami Springs, FL 33166
Office: 305-805-5030 Fax: 305-805-5036
www.miamisprings-fl.gov

Date: 11/17/23 Clerk: NB

☐ Master Permit #: 21-1143
☑ Sub-Permit #: 23-13000

JOB ADDRESS 200 N Esplanade Dr

PERMIT APPLICATION

1. OWNER INFORMATION
Owner: Jovany Jimenez
Address: 200 N Esplanade Dr
City: Miami Springs St: FL Zip: 33166
Driver License No. /I.D.: J552 420 90 288 0
Phone No.: 786 587 7510

2. CONTRACTOR INFORMATION
Company Name: K. Miller Plumbing, Inc.
Qualifier Name: Marcus Miller
Address: Po Box 551850
City: Miami Gardens St: FL Zip: 33055
Lic. No.: CFC 1426691
Phone No.: 305 753-4010

3. PERMIT TYPE (Choose only One)
☐ Building
☐ Electrical
☐ Mechanical
● Plumbing/Gas
☐ Sign
☐ Roofing

4. CHANGE TO AN EXISTING PERMIT (Choose only One)
☐ Change Contractor
☐ Extension
☐ Renewal
☐ Shop Drawing
☐ Lost Plans

5. TYPE OF IMPROVEMENT (Choose only One)
☒ New Construction
☐ Addition Attached
☐ Alteration Interior
☐ Alteration Exterior
☐ Repair/Replace
☐ Demolition/Partial
☐ Re-roof
☐ Driveway
☐ Fence
☐ Window
☐ Door
☐ Shutters
☐ Pool
☐ Shed
☐ Other:

6. ARCHITECT/ ENGINEER INFO
Name:
Address:
City: St: Zip Code: N/A
Lic. No.: Discipline:
Phone No.:

7. CONTACT
Name: Marcus Miller
E-mail:
Phone No.: 305 753-4010 / 786 587-7510

8. LEGAL/USE/WORK VALUE
Folio No. 05- No. of Units
Lot Block Subdivision
Current Use of Property
Description of Work: Plumbing For Building
Square Ft. Linear Ft.
Work Value: 5000.00 Building Value
Flood Zone Base Flood Elevation

Application is hereby made to obtain a permit to do the work and/or installations as indicated. I certify that no work or installation has commenced prior to the issuance of a permit and that all work will be performed to meet the standards of all laws regulating construction in this jurisdiction. I understand that a separate permit must be secured for Electrical, Plumbing, Roofing Signs, Wells, Pools, Furnaces, Boilers, Heaters, Tanks, Air Conditioning, Driveways, Fences, Sheds, Generators, Gas, Sidewalk, Portable Storage Units, Decks, etc.
Owner's Affidavit: I certify that all the foregoing information is accurate and that work will be done in compliance with all applicable laws regulating construction and zoning.

NOTICE REGARDING BUILDING PERMIT APPLICATIONS

The Completion and submission of a Building Permit Application is a requirement of securing a City Building Permit. The City will rely upon the information contained in the Application in determining whether a City Building Permit should be issued. The submission of inaccurate, misleading or misrepresented information in the Application shall subject the Building Permit to denial, suspension or revocation, and the individual applying for the permit, to all appropriate fines, penalties and other punishments authorized by law. KINDLY GOVERN YOURSELF ACCORDINGLY.
WARNING TO OWNER: YOUR FAILURE TO RECORD A NOTICE OF COMMENCMENT MAY RESULT IN YOU PAYING TWICE FOR IMPROVMENTS TO YOUR PROPERTY. IF YOU INTEND TO OBTAIN FINANCING, CONSULT WITH YOUR LENDER OR AN ATTORNEY BEFORE RECORDING YOUR NOTICE OF COMMENCEMENT.

OWNER INFORMATION

Jovany Jimenez
PRINT NAME
OWNER'S SIGNATURE
SWORN TO AND SUBSCRIBED BEFORE ME BY: (PRINT OWNER'S NAME)
Jovany Jimenez
BY MEANS OF [—] PHYSICAL PRESENCE OR [__] ONLINE NOTARIZATION,
WHO IS PERSONALLY KNOWN TO ME OR HAS PRODUCED
FLID# J552-420-90-288-0 AS IDENTIFICATION.
As identified on this 17th day of November 20 23
Notary's Signatures
Printed Name of Notary: Nathalie Baez

NOTARY PUBLIC STATE OF FLORIDA
NATHALIE B. BAEZ
MY COMMISSION # HH 420381
EXPIRES: July 11, 2027

Marcus Miller
PRINT NAME
QUALIFIER'S SIGNATURE
SWORN TO AND SUBSCRIBED BEFORE ME BY: (PRINT QUALIFIER'S NAME)
Marcus Kipchoge Miller
BY MEANS OF [__] PHYSICAL PRESENCE OR [__] ONLINE NOTARIZATION,
WHO IS PERSONALLY KNOWN TO ME OR HAS PRODUCED
FLID# M400-551-72-407-0 AS IDENTIFICATION.
As identified on this 17th day of November 20 23
Notary's Signatures
Printed Name of Notary: Nathalie Baez

NOTARY PUBLIC STATE OF FLORIDA
NATHALIE B. BAEZ
MY COMMISSION # HH 420381
EXPIRES: July 11, 2027

DO NOT WRITE BELOW - FOR OFFICE USE ONLY

✓	TRADE	APPROVED/DATE	DISAPPROVED/DATE
	Zoning		
	Structural		
	Building		
	Electrical		
	Mechanical		
	Plumbing		
	Roofing		
	Flood		
	Publics Works		

APPLICATION INCLUDES	FEES $	00
Zoning		
Structural		
Base Fee	150	00
Scanning	1	00
Technology	15	00
Rework		
Violation		
DBPR/DCA	4	25
Code Compliance		
(-) Upfront Fee		
Balance Due	170	25

CITY OF MIAMI SPRINGS

171 Westward Drive
Miami Springs, Florida 33166
(305) 888-0015

ROOFING PERMIT

Application Number . . . . . 95-00000281 Date 5/17/95
Property Address . . . . . 200 ESPLANADE DRIVE
FOLIO NUMBER . . . . . - - -
Application description . . . RE-ROOFS & REPAIR ROOFS
Property Zoning . . . . . UPDATE
Application valuation 4300

Owner	Contractor
DIAZ, ALAN	ACEBO ROOFING CORP
200 ESPLANADE DRIVE	215 E 15 ST
MIAMI FL 33166	HIALEAH FL 33010
(305) 888-4219	(305) 885-1495

Application description . . . RE-ROOFS & REPAIR ROOFS

------ Structure Information RE-ROOF 19 SQ BUILT UP ROOF -----

Roof Type . . . . . BUILT UP FIBERGL
Other struct info . . . . . COMMERCIAL ? NO
RESIDENTIAL ? YES
MASTER ? YES
SUBSIDIARY ? NO

Permit . . . . . ROOF
Additional desc . .
Permit Fee . . . . 35.00 Plan Check Fee . . .00
Issue Date . . . . 5/17/95 Valuation 4300
Expiration Date . . 11/13/95

Qty	Unit Charge	Per		Extension
			BASE FEE	5.00
1.00	30.0000	FLT	XBLD ROOFING 1ST 20 SQUARES	30.00

Other Fees . . . . . CODE COMPLIANCE FEE 2.50

Fee summary	Charged	Paid	Credited	Due
Permit Fee Total	35.00	35.00	.00	.00
Plan Check Total	.00	.00	.00	.00
Other Fee Total	2.50	2.50	.00	.00
Grand Total	37.50	37.50	.00	.00

Roofing inspections must be scheduled 24 hours prior to inspection. Please call (305) 888-0015 between 8:00 AM and 3:00 PM. No inspection requests will be accepted after 3:00 PM.

left message 5/16

Print Queue Output Page 1
5763SS1 V3R0M5 940604 S101394A 05/16/95 12:13:13

Display Device . . . . . : BDPC3S1
User . . . . . : RAMEYA

BP820U01 CITY OF MIAMI SPRINGS - BP 5/16/95
Payment Due Selection 12:13:08

Application nbr . : 95 00000281
Property . . . . . : 200 ESPLANADE DRIVE

Select fees due, press Enter.
1=Select entire amount

Opt	Amount to apply	Fee Type	Trans amt	Amount due	Str	Permit	Inspection
	2.50	DC	2.50	2.50			
	35.00	PF	35.00	35.00	000 000	ROOF 00	

Total 37.50

F3=Exit F5=Select all fees F12=Cancel

The City of Miami Springs

PERMIT APPLICATION

DATE: 5/12/95 PERMIT# 95-281

ALL OF THE FOLLOWING MUST BE FILLED IN BY THE APPLICANT ACCORDING TO FS 713.135

Application # _____ Estimated cost 4300.00

Square footage 1900

Type of Permit: [X] Building [ ] Plumbing [ ] Electrical [ ] Misc.
[ ] Mechanical [X] Roofing [ ] Sign

==========

Check one of the following: [X] Contractor: MCOL# 12094 [ ] Owner/Builder

CONTRACTOR'S NAME: Acebo Roofing Corp. Phone# 685-2534

Address 4305 E. 10 CN. City Hialeah State FL Zip Code 33013

==========

ARCHITECT/ENGINEER NAME: N/A Phone# _____

Address _____ City _____ State _____ Zip Code _____

==========

SITE ADDRESS: 200 N. Esplanade DR Folio# _____

LEGAL DESCRIPTION: Lots _____ Block _____ Subdivision _____

==========

OWNERS NAME: Alan + Marta Diaz Phone# 888-4219

Address 200 N. Esplanade DR City Miami Springs State FL Zip Code 33166

==========

MISCELLANEOUS WORK DESCRIPTION: RE-ROOF 19Ø Built-up
Fiberglass over Base Sheet.
N/A

Application is hereby made to obtain a permit to do work an installations indicated. I certify that no work has commenced prior to the issuance of a permit and that all work will be performed to meet the standards of all regulating the construction in the City of Miami Springs. I understand that a separate permit must be secured for ELECTRICAL, PLUMBING, AIR CONDITIONING, ROOFING, POOLS, SIGNS, AWNINGS, DRIVEWAYS, ETC.

OWNERS AFFIDAVIT: I certify that all the foregoing information is accurate and that all work will be done in compliance with all applicable laws regulating construction and zoning.

Owners Name Alan Diaz
Signature Alan Diaz
DATE: 5/12/95
NOTARY/OWNER: Official Seal OTILIA ACEBO
My Commission Expires: 6/27/95
Notary Public, State of Florida
My Comm. expires June 27, 1995
No. CC121882

Contractor Pedro L. Acebo
Signature Pedro L. Acebo
Date: 5/12/95
NOTARY/CONTRACTOR: Official Seal OTILIA ACEBO
My Commission Expires: 6/27/95
Notary Public, State of Florida
My Comm. expires June 27, 1995
No. CC121882

WARNING TO OWNER: FAILURE TO RECORD A NOTICE OF COMMENCEMENT MAY RESULT IN YOUR PAYING TWICE FOR IMPROVEMENTS TO YOUR PROPERTY. IF YOU INTEND TO OBTAIN FINANCING, CONSULT WITH YOUR LENDER OR AN ATTORNEY BEFORE RECORDING YOUR NOTICE OF COMMENCEMENT.

PLUMBING	NUMBER
BATH TUB	
BIDET	
DISHWASHER	
DRINKING FOUNTAIN	
FLOOR DRAIN	
GREASE TRAP	
INTERCEPTOR	
LAVATORY	
LAUNDRY TRAY	
CLOTHES WASHER	
SHOWER	
SINK,POT/3 COMP	
SINK, RESIDENCE	
SINK, SLOP	
TEMP WATER CLOSET	
URINAL	
WATER CLOSET	
INDIRECT WASTES	
WATER SUPPLY TO:	
AIR CONDITIONING UNIT	
FIRE SPRINKLER	
HEATER - NEW	
HEATER - REPLACE	
LAWN SPRINKLER	
SWIMMING POOL	
WATER SERVICE	
SEWER CONNECTION	
UTILITY - SEWER	
UTILITY - WATER	
SEPTIC TANK	
SOAKAGE PIT cu ft	
CATCH BASIN	
DISCHARGE WELL	
DOMESTIC WELL	
AREA DRAIN	
ROOF INLET	
SOLAR WATER HEATER	
FIRE STANDPIPE	
POOL PIPING	
LAWN SPRINKLER SYSYTEM	
GAS RANGE	
METER SET (GAS)	
GAS PIPING OUTLETS	
REPAIR	
OTHER	

ELECTRICAL	NUMBER
AIR COND. (CENTRAL)	
BURGLAR ALARM (CENTRAL)	
ALARM (DEVICES)	
CLOTHES DRYER	
DISHWASHER	
DRYER	
FANS (PERMANENT)	
FIRE ALARM	
INTERCOM	
LAMPS/fixture	
MOTORS (LIST BELOW)	
METER RE-CONNECT	
OUTLETS	
RANGE	
RANGE (TOP)	
REFRIGERATOR	
REPAIRS (LIST BELOW)	
ROUGH outlets	
SERVICE CAPACITY	
SIGN (TYPE)	
SMOKE DETECTORS	
SPECIAL PURPOSE OUTLETS	
STRIP HTR (KW)	
SUB FEEDS	
SWIMMING POOL	
TEMP FOR TEST	
TEMP SERVICE	
TRASH COMPACTOR	
WATER HEATER	
OTHER	

SIGNS	NUMBER
NEW SIGN	
CHANGE EXISTING	
CHANGE OF FACE	
SIGN TYPES:	
POLE SIGN	
WALL SIGN	
SINGLE FACE	
DOUBLE FACE	
SIGN CLASSIFICATION:	
ADVERTISEMENT	
CONSTRUCTION	
DIRECTIONAL	
OTHER	

MECHANICAL	NUMBER
CENTRAL A/C SYSTEM	
DUCT WORK # OF DROPS	
TEMPERATURE CONTROLS	
MINIMUM	
SLAVE UNITS	
AIR OR REFRIG COMPRESSOR	
0 - 5 TON	
5 -10 TON	
10-25 TON	
OVER 25 TON	
CONDENSATE LINES	
AIR COMP. OUTLETS	
STRIP HEATERS	
VENTILATORS	
BOILERS	
STEAM OPENINGS	
ELEVATORS	
# OF LANDINGS	
WALL TYPE HEATER	
SOLAR HEATER	
VACUUM SYSTEM	
PER OPENING	
DRAINAGE PIT	
TYPE OF DUCT WORK	
OTHER	

ROOFING	NUMBER
ROOFING TYPE:	
NEW ROOF	
RE-ROOF	
ROOF REPAIR	
ZONING TYPE:	
COMMERCIAL	
RESIDENTIAL	✓
ROOF MATERIAL & QUANTITY:	
BUILT UP # OF SQ.	19
SHINGLE # OF SQ	
TILE # OF SQ.	
MATERIAL TYPE:	
BUILT UP TYPE	✓
SHINGLE TYPE	
TILE TYPE	
OTHER	

remarks:

Job Address: 200 N. Esplanade PRACE BO Contractor ROOFING Process No. _____

APPENDIX 'E'

RECEIVED MAY 12 1995

METRO-DADE UNIFORM BUILDING PERMIT
SECTION II
BUILT-UP APPLICATIONS AND MODIFIED BITUMEN SYSTEMS

OFFICE COPY
CITY OF MIAMI SPRINGS

GENERAL:

Type of Roof System Assembly to be Applied: Built UP Fiberglass over BASE SHEET

Manufacturer of Roof System Assembly: TAMKO

Product Control Approval Number: 95:0222.02

System Number from Product Control Approval: DeckType I System E

(Attach a copy of the Roof System Assembly Product Control Approval and the Manufacturer's System Guide Specification.)

(Note: If a minimum roof system is to be applied, describe all components within the system and list the manufacturer of each component. DO NOT complete this section if system is Product Control Approved.)

Base Sheet: N/A

Fasteners:

Ply Sheet(s):

Cap Sheet:

Asphalt:

(Note: No insulation system is acceptable under the minimum roof category.)

Job Address: 202 N Esplanade PR. Contractor ACE BO ROOFING Process No. _____

Complete the following for all Roof System Assemblies:

(Check one of the following)

Recover ____ Re-roof: ✓ New Construction ____

If a recover, is the existing Roof System Assembly to be used as a bonding substrate?: N/A ____Y ____N

If YES, has an ASTM E907 test been carried out to confirm adhesion of the existing membrane to the substrate?: N/A ____Y ____N
(If 'yes', attach ASTM E907 test report.)

Proposed Fastener: N/A
(Attach withdrawal resistance test report.)

Has the deck been examined for moisture?: N/A ____Y ____N
(Provide data confirming compliance with Section 3401.9(c).)

THE SYSTEM:

All Roof System Assemblies in the Product Approval have a variety of options. Briefly describe the Roofing Components to be used in the Roof System Assembly and attach a copy of the manufacturer's published specification:

Deck:
(Briefly describe)
WOOD - 5/8" Plywood AND 1X6 T/G Boards 3/4" Thick AND Tectum Deck

Insulation:
(Type, size and method of attachment, if applicable)
[redacted]

Base Sheet or Ply:
(Type and method of attachment)
GLASS BASE SHEET (TAMKO) and/[redacted] ↖ Tincapped with 1 1/4" GALV Nails
VaporChan ↖ Nailed Down with Approved T-Lock Fasteners.

Built-Up Applications and Modified Bitumen Systems

Job Address: 200 N. Eglevade OR Contractor Acebo ROOFING Process No. _____

Ply Sheet(s):
(Type and method of attachment)
TAM Ply IV Fiberglass
3 plies Lapped 24" set
with HOT TAR Asphalt Type III.

Top Ply:
(Type and method of attachment)
NONE

Surfacing:
(Type, if applicable)
Emulsion
Aluminum Roof coating
Karnak 169 Asbestos FREE

Flashing Materials:
(Type and method of attachment)
26 GA. GALV. Sheet Metal
nailed with 1¼" GALV NAILS 4" o.c.

FILL IN APPLICABLE ROOFING COMPONENTS WHICH MAKE UP ROOF SYSTEM ASSEMBLY AND THICKNESS OF DECK AND INSULATION LAYER(S). (Where Roofing Component not used in Roof System Assembly, fill in with "N/A".)

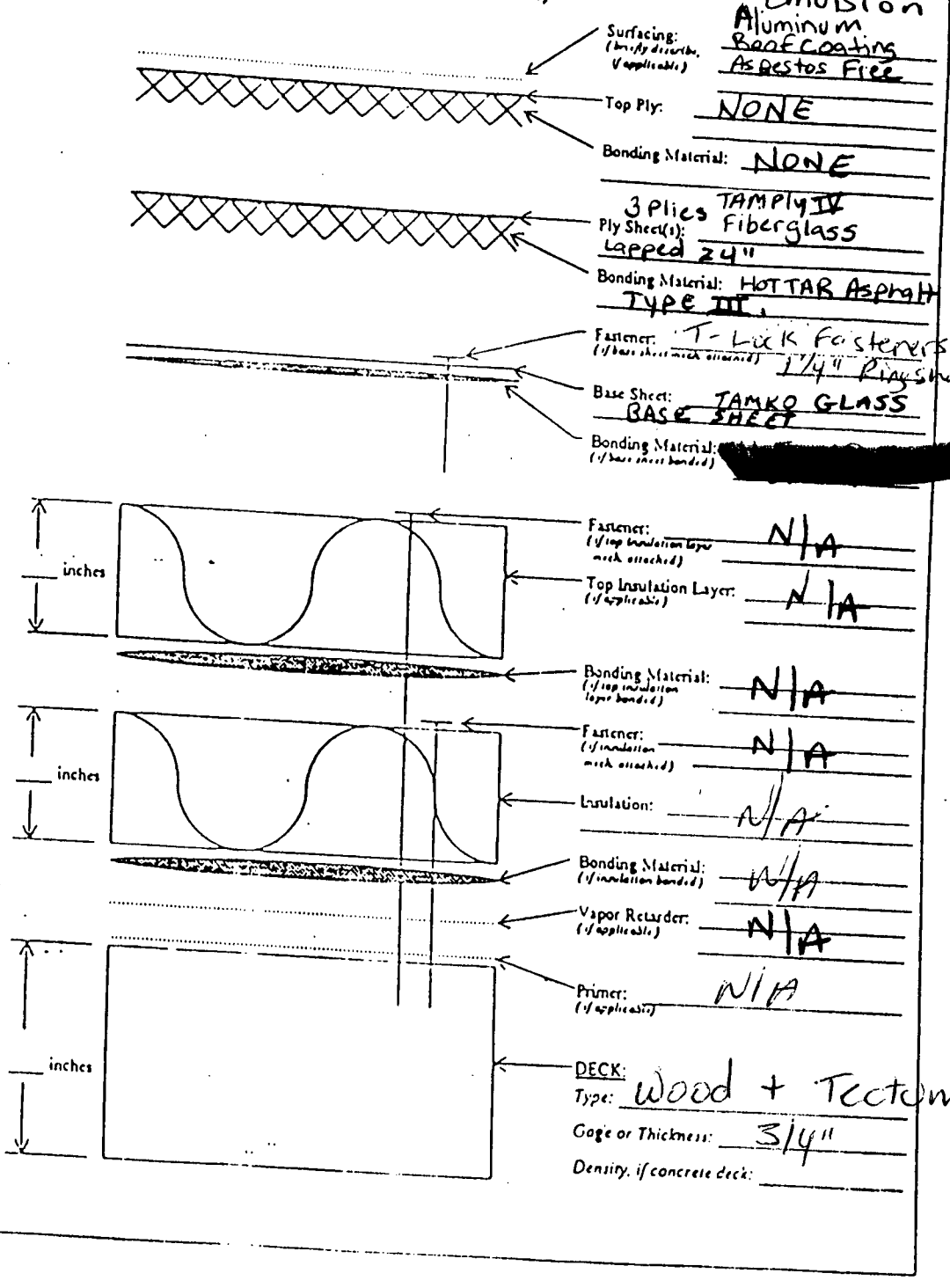

Built-Up Applications and Modified Bitumen Systems

Job Address: 2000 N. Esplanade DR. Contractor ACEBO ROOFING Process No. _____

Coping Cap Gage: _____
Fastener Spacing: ____ o.c.
Clip Type: _____
Clip Gage: _____

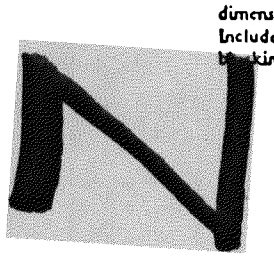

Sketch Roofing Components which make up Roof System Assembly at Perimeter Parapet Walls.
Insert leaders indicating Roofing Component names, dimensions, thicknesses, etc.
Include fastener type and spacing used for wood-blocking attachment.

N/A

Deck Type: _____

PERIMETER DETAIL #1: Parapet Wall Detail

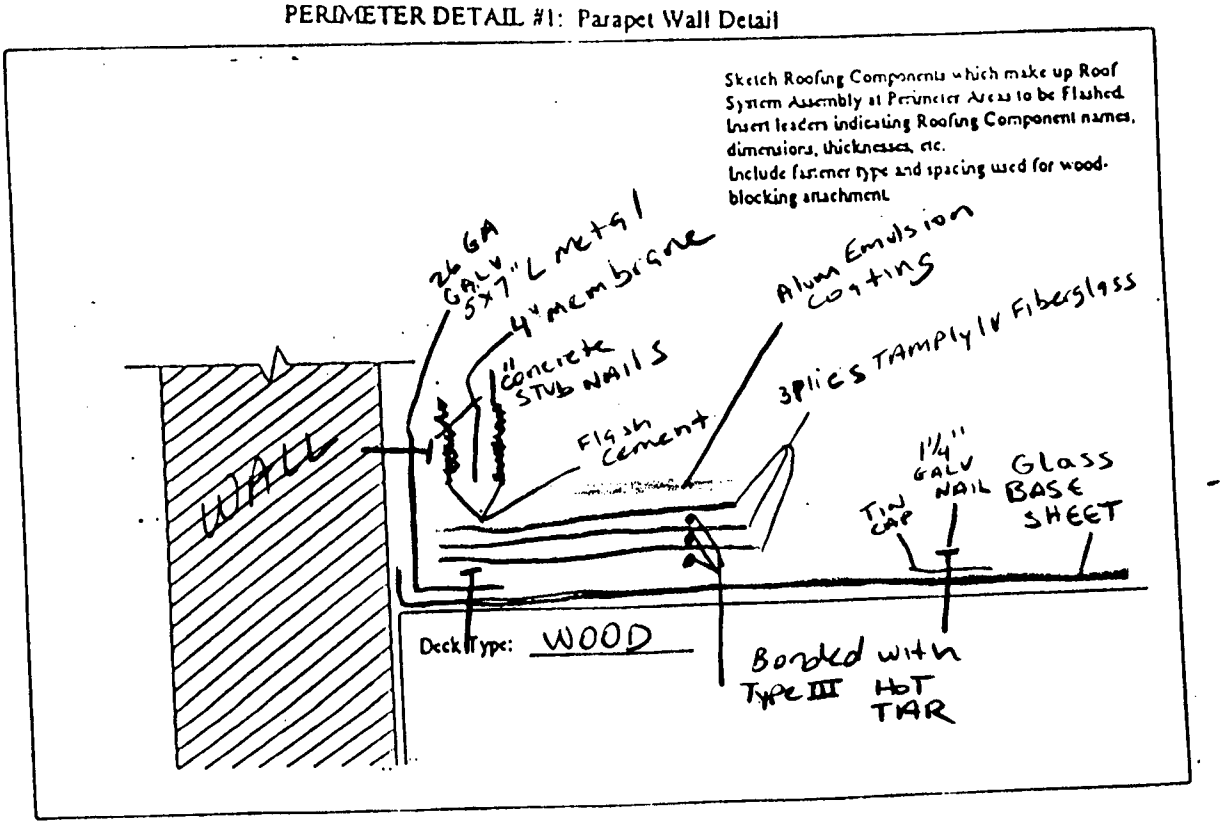

PERIMETER DETAIL #2: Flashing Detail

Built-Up Applications and Modified Bitumen Systems

Job Address: 200 N. Esplanade DR. Contractor ACEBO ROOFING Process No.

Sketch Roofing Components which make up Roof System Assembly at Perimeter Edge with Gravel Stop or Drip Edge.
Insert leaders indicating Roofing Components names, dimensions, thicknesses, etc.
Include fastener type and spacing used for wood blocking attachment.

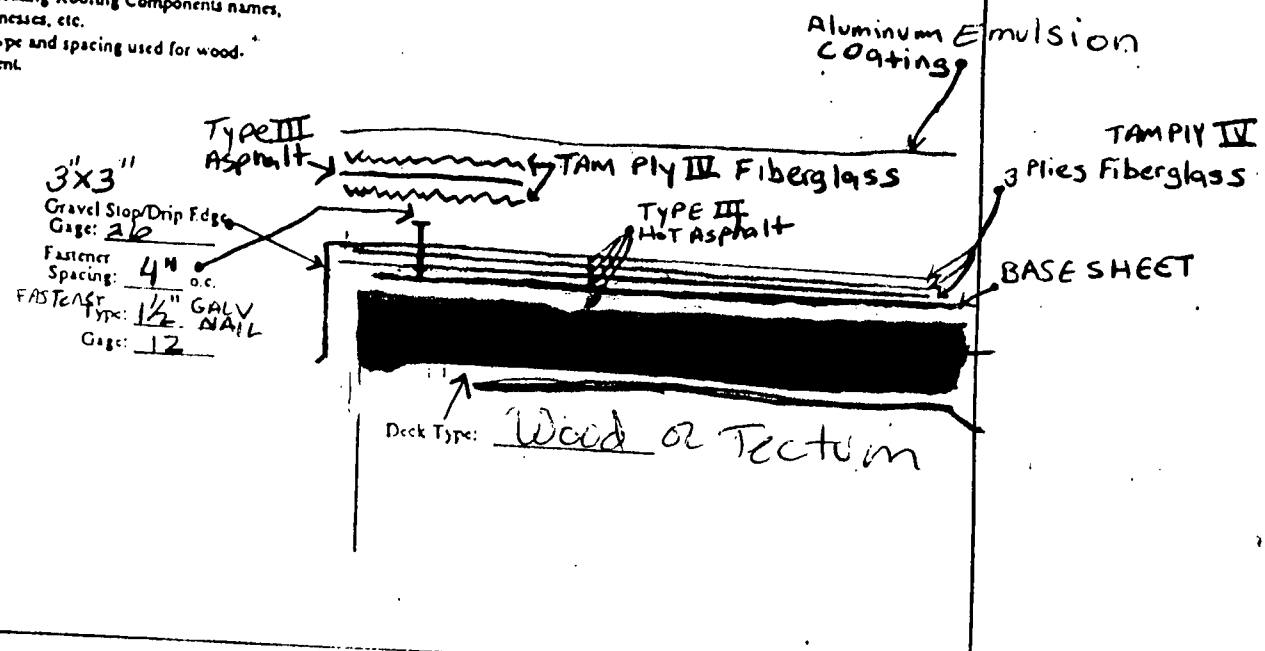

PERIMETER DETAIL #3: Gravel Stop or Drip Edge

Sketch Roofing Components which make up Roof System Assembly at Perimeter Edge with Gutters.
Insert leaders indicating Roofing Component names, dimensions, thicknesses, etc.
Include fastener type and spacing used for wood blocking attachment.

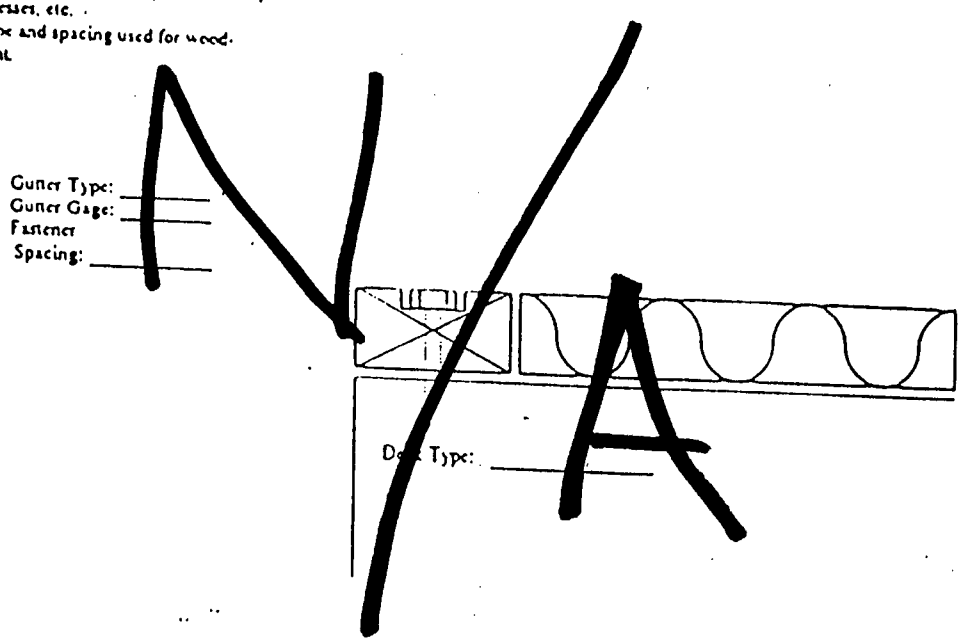

PERIMETER DETAIL #4: Gutter Detail

Built-Up Applications and Modified Bitumen Systems

Job Address: 200 N. Esplanade DR. ACEBO Contractor ROOFING Process No. _____

Sketch Roofing Components which make up Roof System Assembly at any 'other' Perimeter Condition which may exisit.
Insert leaders indicating Roofing Component names, dimensions, thicknesses, etc.
Include fastener type and spacing used for wood blocking attachment.

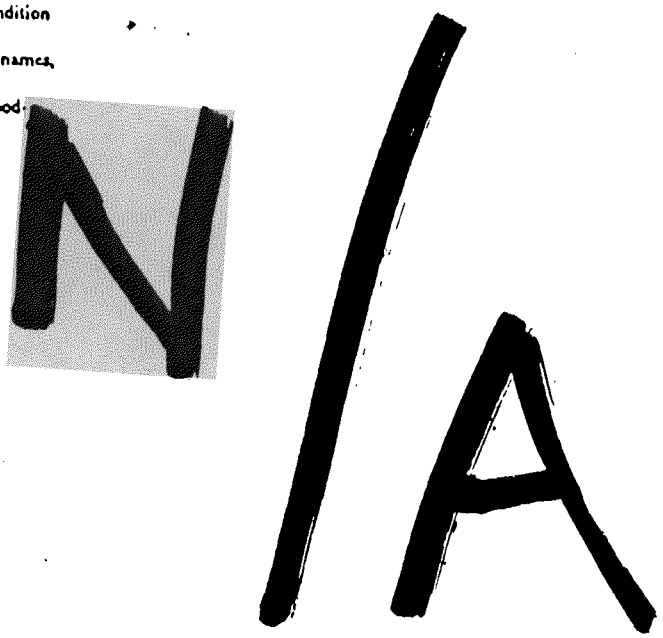

PERIMETER DETAIL #5: 'Other' Detail

Sketch Roofing Components which make up Roof System Assembly at any 'other' Perimeter Condition which may exisit.
Insert leaders indicating Roofing Component names, dimensions, thicknesses, etc.
Include fastener type and spacing used for wood blocking attachment.

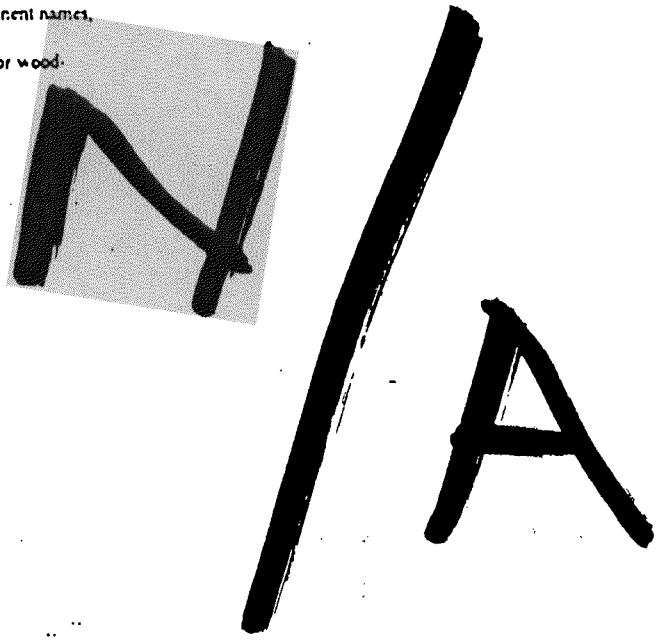

PERIMETER DETAIL #6: 'Other' Detail

Job Address: 200 N. Esplanade DR Contractor Acebo Roofing Process No. _____

Insert Building and Parapet Heights.
(If no Parapet exists, insert "N/A")

Also insert applicable information pertaining to the building below.
(See ASCE 7-88 Fact Sheet Attached)

Exposure Category: C

Classification Category: C

At Hurricane Oceanline?: ___ Y X N

Basic Wind Speed at Building Location: 110 mph

Building Condition based on % of Openings: _____

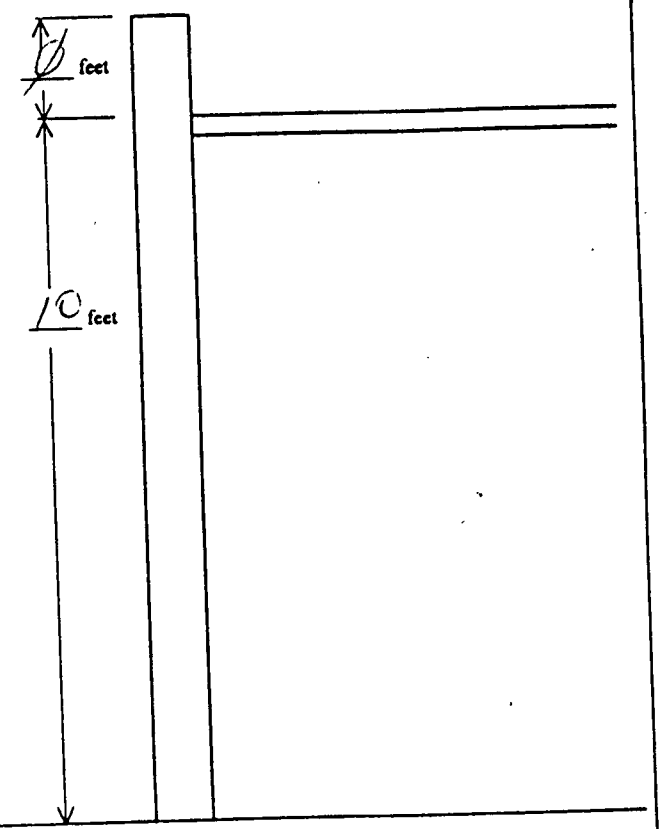

BUILDING INFORMATION #1

Job Address: 200 N. Esplanade DR Contractor Aubo Roofing Process No._____

Sketch Roof Plan indicating all dimensions, any slopes, roof drains, crickets, or roof top equipment. Also insert variable labeled "a" which indicates perimeter and corner dimensions per Chapter 23 of the South Florida Building Code.
(See ASCE 7-88 Fact Sheet Attached)

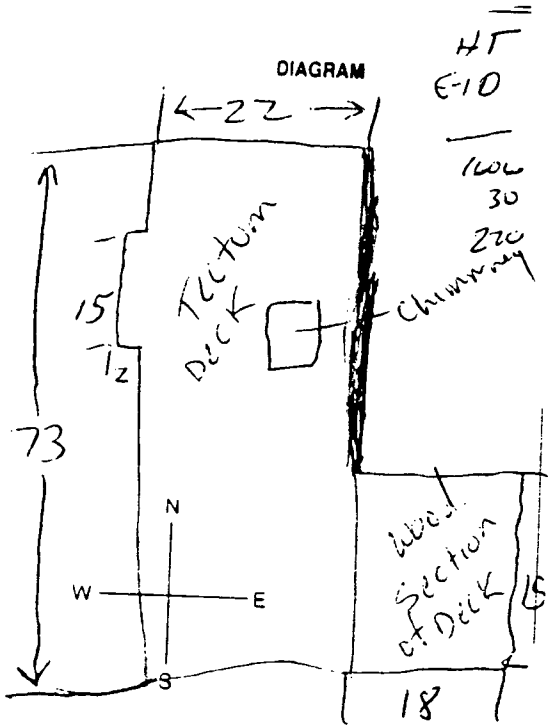

BUILDING INFORMATION #2: Roof Plan with Perimeter and Corner Dimensions

Job Address: 200 N. Esplanade PR-ACE80 Contractor ROOFING Process No. _____

-- FOR PLAN EXAMINER USE ONLY --

Roof System Assembly Product Control Approved: _____ ____ Y ____ N

If NO, note any deficiencies:

_____

_____

_____

_____

Design Pressure Requirements:

Field: _____ psf

Perimeter Areas: _____ psf

Corner Areas: _____ psf

Note any limitations: _____

_____

_____

_____

_____

Reviewed Details?: ____ Y ____ N

Notes: _____

_____

_____

_____

_____

Built-Up Applications and Modified Bitumen Systems

Job Address: 200 N Esplanade PR. Contractor Acebo Roofing Process No.

Amended
Agenda Item No 7 (R)
Page No. 69

Reviewed Field Test Data?: ____ Y ____ N

Notes:

Additional Notes:

Plan Examiner

Job Address: 200 N. Esplanade DR. Contractor: Acebo Roofing Process No. _____

The undersigned certifies that the BUR System Assembly is in compliance with the plans, specifications, and details submitted by the MANF.

STATE OF FLORIDA - COUNTY OF DADE

Before me this day personally appeared P.L. Acebo who, being first duly sworn, deposes and says that all information submitted herein is true and correct.

P.L. Acebo
Licensed Contractor / Owner
Signature

Sworn to and subscribed before me this 12 th day of MAY 1995.

My commission expires: 6/27/95

Official Seal
OTILIA ACEBO
Notary Public, State of Florida
My Comm. Expires June 27, 1995
No. CC221882
Notary Public
State of Florida

NOTARY PUBLIC OFFICIAL SEAL STATE OF FLORIDA

[redacted]

Diaz
1 copy

METRO-DADE

METROPOLITAN DADE COUNTY, FLORIDA
METRO-DADE FLAGLER BUILDING

BUILDING CODE COMPLIANCE DEPARTMENT
SUITE 1603
METRO-DADE FLAGLER BUILDING
140 WEST FLAGLER STREET
MIAMI, FLORIDA 33130-1563
(305) 375-2901
FAX (305) 375-2908

PRODUCT CONTROL NOTICE OF ACCEPTANCE

Tamko Roofing Products, Inc.
220 West Fourth Street
P.O. Box 1404
Joplin, MO 64801

Your application for Product Approval of Tamko Built-up Roof Systems under Chapter 8 of the Metropolitan Dade County Code governing the use of Alternate Materials and types of Construction, and completely described in the plans, specifications and calculations as submitted by Factory Mutual Research Corporation, Construction Research Laboratory, Inc., Underwriters Laboratories, Inc. and Southern Building Code Congress International has been recommended for acceptance by the Building Code Compliance Department to be used in Dade County, Florida under the specific and standard conditions set forth herein.

The approval shall be valid for a period of three years. The Building Code Compliance Department reserves the right to secure a product or material at any time for a jobsite or manufacturer plant for quality control testing. If product or material fail to perform in the approved manner, the Code Compliance Department may revoke, modify or suspend the use of such product or material immediately. The Building Code Compliance Department reserves the right to require testing of this product or material should any amendments to the South Florida Building Code be enacted affecting this product or material.

The expense of such testing will be incurred by the Manufacturer.

PRODUCT NO.: _____

ACCEPTANCE NO.: 95-0222.02

EXPIRES: FEB 1 4 1997

Raul Rodriguez
Product Control Division
Supervisor

-PLEASE NOTE-
THIS IS THE COVERSHEET. SEE ADDITIONAL PAGES FOR SPECIFIC AND GENERAL CONDITIONS.
BUILDING CODE COMMITTEE

This application for Product Approval has been reviewed by the Metropolitan Dade County Building Code Compliance Department and approved by the Building Code Committee to be used in Dade County, Florida under the conditions set forth above.

APPROVED: FEB 2 4 1995

Charles Danger, P.E., Director
Building Code Compliance Department
Metropolitan Dade County

Product Control Notice of Acceptance
Roofing System Approval

Applicant:
Tamko Roofing Products, Inc.
220 West Fourth Street
P.O. Box 1404
Joplin, MO 64801

Product Control No.: 95-0222.02
Approval Date: FEB 2 4 1997
Expiration Date: FEB 1 4 1997

Category:	Roof Membrane Systems
Sub-Category:	Built-Up Roofing
Type:	Conventional
Sub-Type:	Fiberglass/Organic

Tamko Roofing Products, a manufacturer of commercial built-up systems since 1944, produces a wide range of roof products for built-up and modified bitumen roofing systems. In addition Tamko offers two ply modified systems to meet the demands for multi-ply SBS modified specifications.

Tamko systems utilize organic and fiberglass membranes for approved systems. Built-up roof specifications can be found in the 600 (ply IV) and 500 (ply VI) specification series. Specifications can be found in "Commercial Roofing Specifications and Details", published by Tamko annually. Tamko provides warranted systems over various insulated and non-insulated substrates.

Tamko built-up roof systems may be used in conjunction with Tamko Awaplan modified bitumen, the specifications for which may be found in the Tamko Awaplan Product Control Approval. Details shall be installed in compliance with Tamko published or job approved details.

The Tamko Roof System Assemblies have been extensively tested at Factory Mutual Research Corporation and Underwriters Laboratories and have been tested in compliance with all requirements of the South Florida Building Code. Specific classifications for assemblies are listed in the current U.L. Roofing Material Directory and the current Factory Mutual Approval Guide.

Raul Rodriguez

Tamko Roofing Products systems and products are distributed through a wide network of roofing wholesale distributors throughout the South Florida area.

Technical questions should be addressed to the District Commercial Roofing Manager at 1-800-228-2656.

Dodie Webster

220 West Fourth Street
P.O. Box 1404
Joplin MO 64801
417 624-6644 Ext. 257

Raul Rodriguez

Trade Names of Products Manufactured or Labeled by Applicant

Product Control No.: 95-0222.02

Product	Dimensions	Test Specifications	Product Description
Awaplan Premium™	33' 11" x 39-3/8"; Roll weight: 100 lbs	ASTM D 4601	A 250 g/m² polyester reinforced SBS modified bitumen membrane surfaced iwth granules. Applied in hot asphalt or cold adhesive. Also used as a walkway material.
Base-N-Ply®	108' x 36"; Roll weight: 72 lbs..	ASTM D 4601	A fiberglass reinforced SBS modified bitumen base sheet. For use in conventional and modified bitumen built-up roofiing.
Glass-Base™	108' x 36"; Roll weight: 72 lbs.	ASTM D 4601	An asphalt impregnated and coated glass fiber base sheet for use in conventional and modified bitumen built-up roofing.
Tam Glass Premium™	180' x 36"; Roll weight: 53 lbs..	ASTM D 2178 Type VI	Type VI asphalt impregnated and coated glass fiber ply sheet for use in conventional and modified bitumen built-up roofing.
Tam-Cap™	36' x 36"; Roll weight: 83 lbs..	ASTM D 228	Asphalt impregnated and coated felt surfaced with mineral granules used as the top ply in conventional built-up roof membranes.
Tam-Ply IV™	180' x 36"; Roll weight: 44 lbs..	ASTM D 4601 Type IV	Type IV asphalt impregnated glass felt for use in conventional and modified bitumen built-up roofing.
Type 43 Base Sheet	72' x 36"; Roll weight: 85 lbs..	ASTM D 2626	An organic felt reinforced asphalt base sheet. Applied in hot asphalt or mechanically fastened.
Vapor-Chan™	36' x 36"Roll weight: 86 lbs..	ASTM D 4601	An asphalt impregnated and coated glass fiber base sheet for use in conventional and modified bitumen built-up roofing.
Versa Base	54' x 36"; Roll weight: 94 lbs..	ASTM D 5147	A fiberglass reinforced modified bitumen base/ply sheet.

Raul Rodriguez

Versa Base FR	54' x 36"; Roll weight: 60 lbs..	ASTM D 5147	A fiberglass reinforced modified bitumen base/ply sheet.
Versa Flash 160		ASTM D 5147	Flashing material reinforced with 180 g/m² polyester mat saturated with asphalt and coated on both sides with Kraton SBS rubber modified asphalt; surfaced with ceramic granules for protection from ultraviolet degradation.

Raul Rodriguez

Trade Names of Products Manufactured by Others

Product Control No.: 95-0222.02

Product	Dimensions	Test Specifications	Product Description	Manufacturer
Hy-Therm Millox	various	PA 110	Polyisocyanurate foam insulation.	Apache Products Co.
Pyrox	various	PA 110	Polyisocyanurate foam insulation	Apache Products Co.
ACFoam-II	various	PA 110	Polyisocyanurate foam insulation.	Atlas Energy Products
Hy-Tec Blackore	various	PA 110	Polysiocyanurate foam insulation.	Celotex Corp.
Hy-Therm AP	various	PA 110	Polyisocyanurate foam insulation	Celotex Corp.
Hy-Therm Nail-Line	various	PA 110	Polyisocyanurate foam insulation	Celotex Corp.
Anchorbond Fastener		PA 114	Insulation fastening assembly	Construction Fasteners
DekFast Fastener		PA 114	Insulation fastening assembly	Construction Fasteners
Iso-Shield		PA 110	Polyisocyanurate foam insulation.	Dyplast, Inc.
FM-90, FM-60, FM-45		PA 114	Base ply fastening assembly.	ES Products, Inc.
20 F- AF Emulsion		ASTM D 1227	Fibrated aluminum coating.	Grundy
Fibered Aluminum Roof Coating		ASTM D 2824	Fibrated aluminum coating.	Grundy

Raul Rodriguez

Endure-Premium Aluminum		ASTM D 2824	Aluminum coating.	Monsey Products
Premium Long Life		ASTM D 4479	Roof coating.	Monsey Products
Pro-Grade Aluminum		ASTM D 2824	Aluminum coating.	Monsey Products
Weather-Chek Aluminum		ASTM D 2824	Aluminum coating.	Monsey Products
E'NRGY'2	various	PA 110	Polyisocyanurate foam insulation.	NRG Barriers, Inc.
ISORoc	various	PA 110	Polyisocyanurate foam insulation.	NRG Barriers, Inc.
Nail-Tite Type R Fastener		PA 114	Base ply fastening assembly.	Nail-Tite
Con-Tite Fastener		PA 114	Insulation fastening system	Olympic Manufacturing Group
Olympic Base Ply Fasteners		PA 114	Base ply fastening assembly.	Olympic Manufacturing Group
Olympic Fastener		PA 114	Insulation fastening assembly	Olympic Manufacturing Group
GlasFast Fastener		PA 114	Insulation fastening assembly	Owens Corning
Glasfast Striker Fastener		PA 114	Insulation fastening system	Owens Corning
Paroc	various	PA 110	Non woven fiberglass mat insulation.	Partek, Inc.
Foamglas Board	various	PA 110	Polyisocyanurate foam insulation.	Pittsburgh Corning Corp.
Multi-Max	various	PA 110	Polyisocyanurate foam insulation.	RMAX

Raul Rodriguez

Henry 520 Aluminum		ASTM D 2824	Aluminum coating.	Henry Co.
Gripdek Fastener		PA 114	Insulation fastening assembly	ITW Buildex
Hexcel Fastener		PA 114	Insulation fastening assembly	ITW Buildex
Hextra Fastener		PA 114	Insulation fastening assembly	ITW Buildex
Roofgrip Fastener		PA 114	Insulation fastening assembly	ITW Buildex
ISO 95+	various	PA 110	Polyisocyanurate foam insulation	International Permalite
Iso-Lite R	various	PA 110	Polyisocyanurate foam insulation.	International Permalite
Lexsuco Clips w/ Discs		PA 114	Insulation fastening assembly.	International Permalite
Perma-Fastener		PA 114	Insulation fastening assembly.	International Permalite
Karnak No. 81		Proprietary	Cold Applied Adhesive	Karnak Chemical Co.
Karnak No. 97 AF		ASTM D 2824	Fibrated aluminum roof coating.	Karnak Chemical Corporation
Asbestos Fibered Asphalt Emulsion		ASTM D 1227	Based emulsified roof coating.	Monsey Products
Asphalt Emulsion (Fibered)		ASTM D 1227	Based emulsified roof coating.	Monsey Products
Emulsion Roof Coating-Fibered		ASTM 1227	Based emulsified roof coating.	Monsey Products
Endure Emulsion Mastic		ASTM D 1227	Roof coating.	Monsey Products

Raul Rodriguez

Insulfixx Fastener		PA 114	Insulation fastening assembly	SFS/Stadler
Plate Fixx Fastener		PA 114	Insulation fastening assembly	SFS/Stadler
Ultra Gard Gold	various	PA 110	Polyisocyanurate foam insulation	Schuller International, Inc.
Rawl Drive Fastener		PA 114	Insulation fastening assembly.	The Rawlplug Company, Inc.
Rawl Spike Fastener		PA 114	Insulation fastening assembly	The Rawlplug Company, Inc.
Rawlite Fastener		PA 114	Insulation fastening system	The Rawlplug Company, Inc.
Zamac® Nailin		PA 114	Perimeter terminator.	The Rawlplug Company, Inc.
Tru-Fast Fastener		PA 114	Insulation fastening assembly	Tru-Fast
Asphalt		ASTM D 312 Type III, Type II, respectively	Bonding and waterproofing adhesive.	generic
Fibered Asphalt Emulsion		ASTM D 1227	Roof coating.	generic
Fiberglas		PA 110	Fiber glass roof insulation	generic
High Density Wood Fiberboard	various	PA 110	Wood fiberboard insulation.	generic
Nails		PA 114	Min. # 12 corrosion resistant annular ring shank nails, FF-N-105-B Type 2.	generic
Perlite		PA 110	Perlite insulation board	generic

Raul Rodriguez

Tin Caps	min. 32 ga. x 1 5/8" - 2.0"		Min. 32 ga. x 1 5/8" corrosion resistant circular discs.	generic
Type X Gypsum	various	PA 110	Gypsum barrier board.	generic

Raul Rodriguez

Test Reports

Product Control No.: 95-0222.02

Test Agency	Test Identifier	Test Name/Report	Date
Construction Research Laboratory, Inc.	# 4766	Uplift Approval	04.22.87
Factory Mutual Research Corporation	J.I. # 0Q8A7.AM	Class I Fire; 1-90 Windstorm Classification	10.04.90
	J.I. # 1K2A9.AM	Class I Fire; 1-90 Windstorm Classification	11.27.85
	J.I. # 0F0A7.AM	Class I Fire, Wind Uplift, Hail Approval	07.08.81
	J.I. 1X1A5.AM	Wind Uplift and Fire Classification	07.19.93
	J.I. 2TOA2.AM	Wind Uplift and Fire Classification	01.21.91
	J.I. # 0R9A6.AM	Wind Uplift and Fire Classification	01.02.90
Southern Building Code Congress International	# 8318	Class I Fire; 1-90 Windstorm Classification	03.10.83
Tamko Letter		Certified Physical Property Data	07.13.81
Underwriters Laboratories, Inc.	R3225	Fire Classification -- see current directory	12.13.93
	R3325-1 to 13	Wind Uplift resistance	02.17.94

Raul Rodriguez

Insulation Types:

- Fibrous glass
- Perlite
- Fiberboard
- Rockwool
- Polyisocyanurate
- Composite Board

Maximum Design Pressure

Material	Design Pressure
Wood	-55 psf
Steel	-50 psf
Concrete	-80 psf
Lightweight Concrete	-45 psf
Cementitious Wood Fiber	-45 psf
Poured Gypsum	-45 psf

Maximum Fire Classification

Material	Classification
Wood	Class 'A'
Steel	Class 'A'
Concrete	Class 'A'
Lightweight Concrete	Class 'A'
Cementitious Wood Fiber	Class 'A'
Poured Gypsum	Class 'A'

Note: **Fire classifications and maximum design pressures do not reference all assemblies over all deck types. Review system listings for design pressures and the Underwriters Laboratories Roofing Materials Directory for Fire Classifications.**

Raul Rodriguez.

Deck Type 1: Wood, Non-insulated

Deck Description: $^{19}/_{32}$" or greater plywood or wood plank decks

System Type E: Base Sheet mechanically attached.

All General and System Limitations apply.

Base Sheet: Type 43 coated, Base-N-Ply®, Vapor Chan or Glass-Base™ base sheet applied to the deck with approved annular ring shank nails and tin caps at a fastener spacing of 12" o.c. at the lap, 18" o.c. in two rows staggered along the center line of the sheet in the field.

Ply Sheet: Two or three plies of Tam-Glass Premium® or Tam-Ply IV ply sheet adhered in a full mopping of approved asphalt at an application rate of 25 lbs./sq. ± 15%.

Cap Sheet: (Optional) One ply of Tam-Cap® adhered in a full mopping of approved asphalt at an application rate of 25 lbs./sq. ± 15%. (See Tamko application instructions for approved method of installation).

Surfacing: (Required if no cap sheet is used) Install one of the following:

1. 1-1½ gallons fibered aluminum coating per square, 3 gallons emulsion roof coating per square, or asphalt surface at an application rate of 20-25 lbs./sq.. Coatings shall be applied according to the manufacturers' recommendations regarding specific application rates and weathering.

2. Flood coat with an application rate of 60 lbs./sq.; plus gravel or slag with an application rate of 400 or 300 lbs./sq. respectively.

Maximum Design Pressure: -55 psf.

Maximum Fire Classification: 'A'. See General Limitation # 2.

Maximum Slope: 3":12"; See General Limitation # 3.

Specification No.: 512, 514, 516, 612, 614, 616

Raul Rodriguez.

23

Wood Deck

System Limitations:

1. A red rosin sheet may be installed on all wood plank decks to eliminate asphalt seepage and bonding of base sheet to plank and deck. Red rosin sheet may also be installed on plywood decks as an option..

2. Cap nails shall not be used for the mechanical attachment of a base sheet. Tin caps are required by the South Florida Building Code .

3. Non-combustible systems approved by Underwriters Laboratories may be installed on combustible decks while maintaining the same fire rating over a minimum ½" Type X Gypsum board mechanically fastened to the deck.

Raul Rodriguez.
24

4.0 ROOF DECK REQUIREMENTS

4.1 GENERAL

Roof Drainage—Proper and adequate drainage of roof surfaces is critical, and a minimum slope of 1/4 in. per ft. is recommended by the Built-Up Roofing Committee of the Asphalt Roofing Manufacturers Association. Positive drainage is required and is the responsibility of those involved in the design and construction of the roof deck and supporting structure.

TAMKO's definition of "inadequate drainage" refers to an area on a roof in which water does not move to the drains or off the edge of the roof. If standing water remains on the roof for more than 48 hours after a rain, the roof is considered to have areas of inadequate drainage. Questions concerning drainage on specific roofs should be directed to a TAMKO Regional Built-Up Roofing Manager or the Technical Services Division in Joplin, Missouri.

GUARANTEES WILL NOT REMAIN IN EFFECT FOR ANY AREAS OF A ROOF WHICH HAVE INADEQUATE DRAINAGE.

Roof Decks—Responsibility for the roof deck design and the proper interrelationship of all building components rests with the architect, design engineer, and building owner. The density, internal moisture, integrity, and other inherent elements of the deck must be suitable. TAMKO is in no way responsible for any of these factors, and under no circumstances will TAMKO assume such responsibility.

All roof decks (regardless of type) must be smooth, moisture free, dirt free, properly attached, properly constructed, and properly designed for anticipated loads with minimum deflection.

No electrical conduits, bolts, or other similar equipment shall be placed on the surface of the roof deck. Such surface irregularities cannot be properly insulated and roofed.

4.2 WOOD DECKS

All boards should have a bearing on rafters at each end and should be securely nailed. A deck is not satisfactory if boards deflect perceptibly under an average man's weight. Cracks wider than 1/4 in. and knotholes larger than 3/8 in. in diameter must be covered with metal that is securely nailed.

Plywood decks must be a minimum of Grade CD, Exposure 1, as defined by the American Plywood Association (APA). The plywood should have a minimum thickness of 1/2 in. and be installed on rafters spaced not to exceed 24 in. on center. Plywood application should be in accordance with the general recommendations of the APA.

Wood and plywood decks must cure and come to an equilibrium moisture content before installation of the roofing membrane. Unusually high or low moisture content at the time of membrane application may result in buckling or other dimensional changes in the boards.

Fastening of the TAMKO TYPE 43 Coated Base Sheet, GLASS-BASE, or BASE-N-PLY base sheet to the wood deck should be done through flat metal caps or with acceptable nails having attached caps of a minimum of 1 in. in diameter. TAMKO fastening recommendations are covered in Section 10.0.

Nonveneer wood panels are not acceptable decks for TAMKO Commercial Roofing Systems. Nonveneer products include waferboard, chipboard, oriented strandboard, and particleboard.

4.3 POURED GYPSUM DECKS

A poured gypsum roof deck that is either surface-wet or frozen is not suitable to receive a TAMKO roof. The deck must be smooth and well troweled. Provisions must be made for venting of these decks from the underside and topside. Adding additional board insulation directly over newly poured gypsum decks is not acceptable. Adding additional insulation over aged, dry gypsum decks is acceptable only with prior written approval by the TAMKO District Commercial Manager for your area.

The gypsum must be a minimum of 2 in. thick and surface-dry before roofing is applied. TAMKO will not be responsible for leaks resulting from splits in the built-up roofing which are caused by cracking of the gypsum deck after the roofing has been applied, regardless of the cause for cracking.

VAPOR-CHAN should be secured to the deck using ES Nailtite Nail or other approved fastener with initial withdrawal resistance of not less than 40 lbs. per fastener as recommended by the Gypsum Roof Deck Association. TAMKO fastening recommendations are covered in Section 10.0.

For reroofing exceptions, contact the Director of Technical Services or your District Commercial Manager.

4.4 LIGHTWEIGHT (INSULATING) CONCRETE DECKS

The high moisture content of lightweight (insulating) concrete decks may result in blistering and damage to the roofing membrane. These decks are acceptable for specific roofing systems when care is taken in the construction of the deck and in the application of the roofing system. The deck must have a 2 in. minimum thickness. The slope of the deck may not exceed 1 in. per ft. The cured deck should be smooth to the touch and free of depressions, ridging, and any exposed reinforcing mesh. The deck should be installed by a contractor who is approved by the deck manufacturer. The deck must be installed in accordance with the deck manufacturer's recommendations and specifications and the deck installer shall provide certification to the roofing contractor that the deck is suitable to receive the roofing system. Lightweight structural concrete whose density is 100 to 200 lbs. per cu. ft. should not be confused with lightweight insulating concrete whose density is 20 to 40 lbs. per cu. ft.

Provisions must be made for venting of these decks from the underside and topside. Underside venting will be accomplished with slotted galvanized structural steel decking which allows ventilation from below.

The base ply should be fastened using fasteners approved by the deck manufacturer. VAPOR-CHAN is required as the base ply fastened in accordance with TAMKO's recommendations (see Section 10.0). Adding additional insulation directly over these decks is not acceptable. For possible exceptions, contact the Director of Technical Services.

TAMKO will not be responsible for roof leaks which result from membrane splitting when applied over lightweight (insulating) concrete which has moved or cracked after the membrane has been applied. Information concerning the use of lightweight (insulating) concrete decks is available through the Director of Technical Services.

TAMKO will not approve nor accept TAMKO membranes over lightweight (insulating) concrete which is poured over structural concrete decking or any other nonventing substrate. For possible exceptions on nonventilating substrates (NVS) in some geographic locations, contact the TAMKO District Commercial Manager serving your area or the Director of Technical Services.

4.5 METAL DECKS

Any of the TAMKO specifications for use over insulation may be applied over a metal deck, providing the metal deck is covered with rigid insulation. TAMKO supports the NRCA's Technical Bulletin 15-91, Corrosion Protection for New Steel Roof Decks. Please contact Technical Services for further information regarding this technical bulletin.

The metal deck must be firm, capable of withstanding rooftop traffic, and properly secured to the building's structural support system. The deck must be no lighter than 22 ga. (uncoated) and must comply with Factory Mutual Loss Prevention Data 1-28.

The insulation must comply with TAMKO's requirements for roof insulation (see Section 6.0). The insulation must be of a suitable thickness to span the rib opening as recommended by the insulation manufacturer.

TAMKO requires that the first layer of insulation be mechanically fastened. Since 1-1-84, Factory Mutual has required that the first layer of insulation must be mechanically fastened to the steel deck.

4.6 POURED CONCRETE DECKS

Concrete must be poured over steel reinforcement and removable forms. A concrete deck will not be considered satisfactory if it is either wet or frozen. Any sharp ridges or depressions should be hammered smooth and leveled. Perimeter nailers must be provided. All wood cant strips used in conjunction with concrete roof decks must be mechanically attached to the wood nailers.

All concrete decks must be primed with concrete primer at the rate of 3/4 gal. per 100 sq. ft. and insulated prior to the application of TAMKO roofing materials. For possible exceptions, contact the Director of Technical Services.

4.7 PRECAST CONCRETE DECKS

These decks are satisfactory as a base to receive a TAMKO roof only if they form a smooth surface and are insulated. Top joints between slabs should be grouted.

Precast concrete decks must be primed with concrete primer at the rate of 3/4 gal. per 100 sq. ft. and insulated prior to the application of TAMKO roofing materials. For specifications which do not require insulation, see Specifications 113FR, 113, and 113HW.

4.8 STRUCTURAL WOOD FIBER ROOF DECKS

Structural wood fiber roof deck panels which incorporate composite elements (e.g., polyurethane or other insulations, particleboard or chipboard) are **not approved** for use in TAMKO approved roofing systems. TAMKO roofing system guarantees will not be issued on these deck systems.

Questions regarding these decks and requirements should be directed to the Director of Technical Services.

The approval of structural wood fiber roof deck systems is subject to the following conditions:

New construction:

1. A TAMKO TYPE 43 Coated Base Sheet or BASE-N-PLY must be mechanically fastened, followed by a 3/4 in. minimum layer of rigid insulation board (applied at a right angle to the panel length) solidly mopped to the base sheet. Alternately, a 3/4 in. minimum layer of rigid insulation may be mechanically fastened to the structural wood fiber roof deck.
2. Only 4-ply, gravel-surfaced fiberglass BUR, and modified systems are acceptable to receive a TAMKO roofing system guarantee.

4.0 ROOF DECK REQUIREMENTS

4.1 GENERAL

Roof Drainage—Proper and adequate drainage of roof surfaces is critical, and a minimum slope of 1/4 in. per ft. is recommended by the Built-Up Roofing Committee of the Asphalt Roofing Manufacturers Association. Positive drainage is required and is the responsibility of those involved in the design and construction of the roof deck and supporting structure.

TAMKO's definition of "inadequate drainage" refers to an area on a roof in which water does not move to the drains or off the edge of the roof. If standing water remains on the roof for more than 48 hours after a rain, the roof is considered to have areas of inadequate drainage. Questions concerning drainage on specific roofs should be directed to a TAMKO Regional Built-Up Roofing Manager or the Technical Services Division in Joplin, Missouri.

GUARANTEES WILL NOT REMAIN IN EFFECT FOR ANY AREAS OF A ROOF WHICH HAVE INADEQUATE DRAINAGE.

Roof Decks—Responsibility for the roof deck design and the proper interrelationship of all building components rests with the architect, design engineer, and building owner. The density, internal moisture, integrity, and other inherent elements of the deck must be suitable. TAMKO is in no way responsible for any of these factors, and under no circumstances will TAMKO assume such responsibility.

All roof decks (regardless of type) must be smooth, moisture free, dirt free, properly attached, properly constructed, and properly designed for anticipated loads with minimum deflection.

No electrical conduits, bolts, or other similar equipment shall be placed on the surface of the roof deck. Such surface irregularities cannot be properly insulated and roofed.

4.2 WOOD DECKS

All boards should have a bearing on rafters at each end and should be securely nailed. A deck is not satisfactory if boards deflect perceptibly under an average man's weight. Cracks wider than 1/4 in. and knotholes larger than 3/8 in. in diameter must be covered with metal that is securely nailed.

Plywood decks must be a minimum of Grade CD, Exposure 1, as defined by the American Plywood Association (APA). The plywood should have a minimum thickness of 1/2 in. and be installed on rafters spaced not to exceed 24 in. on center. Plywood application should be in accordance with the general recommendations of the APA.

Wood and plywood decks must cure and come to an equilibrium moisture content before installation of the roofing membrane. Unusually high or low moisture content at the time of membrane application may result in buckling or other dimensional changes in the boards.

Fastening of the TAMKO TYPE 43 Coated Base Sheet, GLASS-BASE, or BASE-N-PLY base sheet to the wood deck should be done through flat metal caps or with acceptable nails having attached caps of a minimum of 1 in. in diameter. TAMKO fastening recommendations are covered in Section 10.0.

Nonveneer wood panels are not acceptable decks for TAMKO Commercial Roofing Systems. Nonveneer products include waferboard, chipboard, oriented strandboard, and particleboard.

4.3 POURED GYPSUM DECKS

A poured gypsum roof deck that is either surface-wet or frozen is not suitable to receive a TAMKO roof. The deck must be smooth and well troweled. Provisions must be made for venting of these decks from the underside and topside. Adding additional board insulation directly over newly poured gypsum decks is not acceptable. Adding additional insulation over aged, dry gypsum decks is acceptable only with prior written approval by the TAMKO District Commercial Manager for your area.

The gypsum must be a minimum of 2 in. thick and surface-dry before roofing is applied. TAMKO will not be responsible for leaks resulting from splits in the built-up roofing which are caused by cracking of the gypsum deck after the roofing has been applied, regardless of the cause for cracking.

VAPOR-CHAN should be secured to the deck using ES Nailtite Nail or other approved fastener with initial withdrawal resistance of not less than 40 lbs. per fastener as recommended by the Gypsum Roof Deck Association. TAMKO fastening recommendations are covered in Section 10.0.

For reroofing exceptions, contact the Director of Technical Services or your District Commercial Manager.

4.4 LIGHTWEIGHT (INSULATING) CONCRETE DECKS

The high moisture content of lightweight (insulating) concrete decks may result in blistering and damage to the roofing membrane. These decks are acceptable for specific roofing systems when care is taken in the construction of the deck and in the application of the roofing system. The deck must have a 2 in. minimum thickness. The slope of the deck may not exceed 1 in. per ft. The cured deck should be smooth to the touch and free of depressions, ridging, and any exposed reinforcing mesh. The deck should be installed by a contractor who is approved by the deck manufacturer. The deck must be installed in accordance with the deck manufacturer's recommendations and specifications and the deck installer shall provide certification to the roofing contractor that the deck is suitable to receive the roofing system. Lightweight structural concrete whose density is 100 to 200 lbs. per cu. ft. should not be confused with lightweight insulating concrete whose density is 20 to 40 lbs. per cu. ft.

Provisions must be made for venting of these decks from the underside and topside. Underside venting will be accomplished with slotted galvanized structural steel decking which allows ventilation from below.

The base ply should be fastened using fasteners approved by the deck manufacturer. VAPOR-CHAN is required as the base ply in accordance with TAMKO's recommendations (see Section 10.0). Adding additional insulation directly over these decks is not acceptable. For possible exceptions, contact the Director of Technical Services.

TAMKO will not be responsible for roof leaks which result from deck splitting when applied over lightweight (insulating) concrete which has moved or cracked after the membrane has been applied. Information concerning the use of lightweight (insulating) concrete decks is available through the Director of Technical Services.

TAMKO will not approve nor accept TAMKO membranes over lightweight (insulating) concrete which is poured over structural concrete decking or any other nonventing substrate. For possible exceptions on nonventilating substrates (NVS) in some geographic locations, contact the TAMKO District Commercial Manager serving your area or the Director of Technical Services.

4.5 METAL DECKS

Any of the TAMKO specifications for use over insulation may be applied over a metal deck, providing the metal deck is covered with rigid insulation. TAMKO supports the NRCA's Technical Bulletin 15-91, Corrosion Protection for New Steel Roof Decks. Please contact Technical Services for further information regarding this technical bulletin.

The metal deck must be firm, capable of withstanding rooftop traffic, and properly secured to the building's structural support system. The deck must be no lighter than 22 ga. (uncoated) and must comply with Factory Mutual Loss Prevention Data 1-28.

The insulation must comply with TAMKO's requirements for roof insulation (see Section 6.0). The insulation must be of a suitable thickness to span the rib opening as recommended by the insulation manufacturer.

TAMKO requires that the first layer of insulation be mechanically fastened. Since 1-1-84, Factory Mutual has required that the first layer of insulation must be mechanically fastened to the steel deck.

4.6 POURED CONCRETE DECKS

Concrete must be poured over steel reinforcement and removable forms. A concrete deck will not be considered satisfactory if it is either wet or frozen. Any sharp ridges or depressions should be hammered smooth and leveled. Perimeter nailers must be provided. All wood cant strips used in conjunction with concrete roof decks must be mechanically attached to the wood nailers.

All concrete decks must be primed with concrete primer at the rate of 3/4 gal. per 100 sq. ft. and insulated prior to the application of TAMKO roofing materials. For possible exceptions, contact the Director of Technical Services.

4.7 PRECAST CONCRETE DECKS

These decks are satisfactory as a base to receive a TAMKO roof only if they form a smooth surface and are insulated. Top joints between slabs should be grouted.

Precast concrete decks must be primed with concrete primer at the rate of 3/4 gal. per 100 sq. ft. and insulated prior to the application of TAMKO roofing materials. For specifications which do not require insulation, see Specifications 113FR, 113, and 113HW.

4.8 STRUCTURAL WOOD FIBER ROOF DECKS

Structural wood fiber roof deck panels which incorporate composite elements (e.g., polyurethane or other insulations, particleboard or chipboard) are **not approved** for use in TAMKO approved roofing systems. TAMKO roofing system guarantees will not be issued on these deck systems.

Questions regarding these decks and requirements should be directed to the Director of Technical Services.

The approval of structural wood fiber roof deck systems is subject to the following conditions:

New construction:

1. A TAMKO TYPE 43 Coated Base Sheet or BASE-N-PLY must be mechanically fastened, followed by a 3/4 in. minimum layer of rigid insulation board (applied at a right angle to the panel length) solidly mopped to the base sheet. Alternately, a 3/4 in. minimum layer of rigid insulation may be mechanically fastened to the structural wood fiber roof deck.
2. Only 4-ply, gravel-surfaced fiberglass BUR, and modified systems are acceptable to receive a TAMKO roofing system guarantee.

All masonry and metal surfaces which are to receive a mopping of asphalt should be primed first with concrete primer at a rate of approximately 3/4 gal. per 100 sq ft.

All plies of roofing membrane should commence at the low points. Application will not be accepted if at any point the flow of water is against the laps.

The base ply in all specifications should not be allowed to remain open without surface protection. **Phased application of TAMKO commercial roofing materials is not acceptable.** For possible exceptions with modified roofing systems, contact the Technical Services Division.

All felts and coated rolls, including AWAPLAN VERSA-SMOOTH and VERSA-BASE®, should be rolled and broomed in place immediately behind the mop and firmly embedded into the hot mopping. Care should be exercised to avoid heavy brooming of fiberglass ply sheets.

Sheets should not be "dropped" or nailed and turned back. End laps should not be less than 4 in. Excessive traffic on any roof is discouraged.

8.2 HOT ASPHALT APPLIED POLYESTER SBS MODIFIEDS

This section applies to the following TAMKO products: **AWAPLAN PREMIUM, AWAPLAN PREMIUM FR, AWAPLAN VERSA-SMOOTH, AWAPLAN 170 FR, or AWAPLAN 170.**

Interply moppings of asphalt should consist of approximately 23 lbs. (±15%) per square for AWAPLAN PREMIUM, AWAPLAN PREMIUM FR, AWAPLAN VERSA-SMOOTH, AWAPLAN 170 FR, or AWAPLAN 170. The asphalt must be a minimum of 400°F at the point of application. ASTM Type III or IV asphalt should be used for application of AWAPLAN PREMIUM, AWAPLAN PREMIUM FR, AWAPLAN VERSA-SMOOTH, AWAPLAN 170 FR, or AWAPLAN 170. **Excessive interply moppings should be avoided as slippage may result.**

Side laps of the AWAPLAN PREMIUM, AWAPLAN PREMIUM FR, AWAPLAN VERSA-SMOOTH, AWAPLAN 170 FR, or AWAPLAN 170 membrane should be 4 in. (consistent with the factory selvedge). The entire sheet, including the side lap, must be totally adhered in asphalt with no void areas. A small amount of asphalt protruding from the side lap is acceptable and assists in the inspection when determining proper application. Care should be taken to avoid excessive amounts of asphalt at the lap. All exposed asphalt in excess of 1/4 in. width should be covered with granules. Alternately, mopping the field of the membrane and heat welding the laps is an acceptable method of installation.

End laps of the AWAPLAN PREMIUM, AWAPLAN PREMIUM FR, AWAPLAN VERSA-SMOOTH, AWAPLAN 170 FR, or AWAPLAN 170 membrane should overlap the underlying sheet by a minimum of 6 in. The protrusion of asphalt from the end lap is acceptable and provides a checkpoint for the proper application of the material. All end laps should be staggered or a modified cap sheet installed over each row of end laps.

Factory Splices: On rolls of AWAPLAN PREMIUM, AWAPLAN PREMIUM FR, AWAPLAN VERSA-SMOOTH, AWAPLAN 170 FR, or AWAPLAN 170 where a splice exists, the splice is marked with a tag. This splice should be cut out before the roll is applied to the roof. Where the splice has been removed, the material should be lapped 6 in. in the same fashion as a normal end lap. An alternate method is to cover the splice with a full-width piece of AWAPLAN which extends at least 6 in. on both sides of the splice.

8.3 TORCH APPLIED POLYESTER SBS MODIFIEDS

This section applies to the following TAMKO products: **AWAPLAN HEAT WELDING or AWAPLAN VERSA-SMOOTH.**

Heat welding (also known as torching) requires that the applicator be experienced in this type of application. Certifications are available through various industry organizations. For further information contact TAMKO. Fire extinguishers should be on the roof at all times. The torch should be used to warm up the surface to which the AWAPLAN HEAT WELDING or AWAPLAN VERSA-SMOOTH is being applied, preheat portions of the roll which are about to be applied, and melt the modified asphalt on the back of the sheet which will be used to adhere the membrane. The area of the roll where the modified asphalt is being melted is the most critical. It must be heated evenly across the entire width of the sheet which is being heat welded. During normal application, a small bead of asphalt should precede the roll as it is laid down. This bead of asphalt will be visible to the applicator and should flow out on both sides of the sheet.

Safety is of major importance when heat welding modified bitumens. It is the sole responsibility of the roofing applicator to enforce fire safety precautions and to ensure safety at all times. Torches should be extinguished when not in use and should not be left unattended. There should be a sufficient number of fire extinguishers on the roof to handle any contingency which might develop. The roofing applicators should be trained in the proper use of fire extinguishers. If you need more information regarding the safe application of modified bitumens, contact the Asphalt Roofing Manufacturers Association (ARMA) for their booklet regarding heat welding of modified bitumens titled *Torch Applied Roofing Do's and Don'ts* or their video, *A Guide to Safety Torch-On Modified Bitumen.*

Factory Splices: On rolls of AWAPLAN HEAT WELDING or AWAPLAN VERSA-SMOOTH where a splice exists, the splice is marked with a tag. This splice should be cut out before the roll is applied to the roof. Where the splice has been removed, the material should be lapped 6 in. in the same fashion as a normal end lap. An alternate method is to cover the splice with a full-width piece of AWAPLAN which extends at least 6 in. on both sides of the splice.

Further information concerning the proper application of AWAPLAN HEAT WELDING or AWAPLAN VERSA-SMOOTH may be obtained by contacting the Director of Technical Services.

AWAPLAN PREMIUM FR, VERSA-CAP FR, AWAPLAN 170 FR, and AWAPLAN 170 are currently not available in a heat-welding grade.

8.4 COLD PROCESS APPLIED POLYESTER SBS MODIFIEDS

This section applies to the following TAMKO products: AWAPLAN PREMIUM and AWAPLAN 170. Contact the Director of Technical Services for additional cold process membrane options.

Starting at the low point of the roof, install 1 ply of the granule surfaced membrane, side lapped 4 in. and end lapped 6 in. over the base sheet. The field of the membrane should be solidly adhered to the base sheet with an application of TAM-PRO™ CPA Premium SBS Adhesive at a rate not to exceed 1-1/2 gallons per square, and the side laps and the end laps welded together with a hot air welder. CAUTION: **Do not expose the cold adhesive to an open flame.**

8.5 HOT ASPHALT APPLIED FIBERGLASS SBS MODIFIED

This section applies to the following TAMKO product: VERSA-CAP FR.

Interply moppings of asphalt will consist of approximately 23 lbs. (±15%) per square for VERSA-CAP FR. The asphalt must be a minimum of 400°F at the point of application. Asphalt meeting ASTM D-312 Type IV should be used for application of VERSA-CAP FR.

Side laps of the VERSA-CAP FR membrane should be 3 in. (consistent with the factory selvedge). The entire sheet, including the side lap, must be totally adhered in hot asphalt with no void areas. A small amount of asphalt protruding from the side lap is acceptable and assists in the inspection when determining proper application. Care should be taken to avoid excessive amounts of asphalt at the lap. All exposed asphalt in excess of 1/4 in. width should be covered with granules.

End laps of the VERSA-CAP FR membrane should overlap the underlying sheet by a minimum of 4 in. The protrusion of asphalt from the end lap is acceptable and provides a checkpoint for the proper application of the material. All end laps should be staggered or a modified cap sheet installed over each row of end laps.

VERSA-CAP FR should not be applied with asphalt which is below 400°F at the point of application. Do not mop the asphalt more than 4 ft. in front of the roll. Immediately press the roll into the hot asphalt by applying pressure to the factory core in the roll.

To ensure satisfactory performance, the VERSA-CAP FR can be unrolled and allowed to relax prior to application.

Alternately, VERSA-CAP FR can be unrolled, cut into lengths of 12 to 18 ft. and allowed to relax and flatten prior to application.

8.6 BUILT-UP ROOFING

Interply moppings of asphalt should consist of approximately 23 lbs. (±15%) per 100 sq. ft. of roof area. **Excessive interply moppings should be avoided as slippage may result.** Allow time for the asphalt to set up before walking on completed plies of glass felts. Displacement is inversely proportional to the set time.

The flood coat should be uniformly applied at the rate of approximately 60 lbs. (±15%) per 100 sq. ft. of roof area. Recommendations for weights as stated are based upon application under average conditions. Application at extremely low or high temperatures can result in variations from the prescribed limits. For roof deck surfaces or insulating material which absorb asphalt, the asphalt must be applied in a quantity sufficient to assure adequate adhesion.

Organic roofing felts should not be permitted to remain overnight without surface protection. The base ply in all specifications should not be allowed to remain open without surface protection. **Phased application of TAMKO commercial roofing materials is not acceptable.**

Surfacing of the finished plies of fiberglass systems may be delayed up to 60 days without a glaze coat. Before the surfacing is applied, the roof must be dry and clean. **All roof drain areas should be glazed immediately upon installation.** All felts and coated rolls should be rolled and broomed in place immediately behind the mop and firmly embedded into the hot mopping. Care should be exercised to avoid heavy brooming of fiberglass ply sheets.

Sheets should not be "dropped" or nailed and turned back. End laps should not be less than 4 in. Excessive traffic on any roof is discouraged.

9.0 SLOPE NAILING REQUIREMENTS

All nailing should be done through flat metal caps or with nails with attached caps of a minimum 1 in. in diameter. Gravel surfacing on slopes exceeding 1-1/2 in. per 12 in. may experience movement of the pour coat and therefore the designer may wish to choose an alternate surfacing method.

On nailable decks, all plies of roofing membrane used in the construction of asphalt built-up roofs on slopes exceeding 1 in. per ft. should be backnailed approximately 4 in. down from the upper edge at intervals not to exceed 24 in.

On non-nailable decks or insulation, treated wood nailers should be provided on slopes exceeding 1 in. per ft. These nailers should be installed horizontally. Roofing felts are installed parallel to the slope. Roofing felts and all end laps are fastened at 6 in. intervals across the width of the sheet to the nailer (see Section 10.0). Spacing of wood nailers should not exceed the recommendations of the roof insulation manufacturer.

AWAPLAN PREMIUM, AWAPLAN PREMIUM FR, AWAPLAN HEAT WELDING, AWAPLAN 170 FR, AWAPLAN 170 or VERSA-CAP FR: Fastening of the membrane is required at 6 in. intervals across the top of the sheet on slopes above 3/4 in. per ft. The membrane should be applied parallel (i.e., strap) to the slope of the roof. Fastening requirements for slopes over 3 in. per ft. should be obtained from the Director of Technical Services.

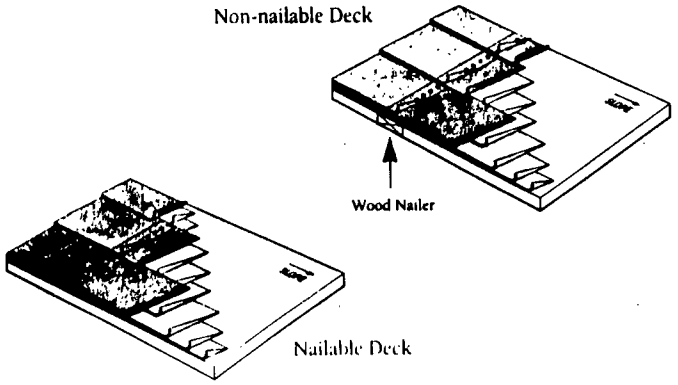

10.0 BASE PLY FASTENING

10.1 NAILING PATTERN

The standard nailing pattern for base sheets applied to nailable type decks is illustrated in the diagram to the right. Nail the sheets along the lap at intervals of no more than 9 in. Stagger-nail on 18 in. centers along two lines located 12 in. from each edge of the base sheet.

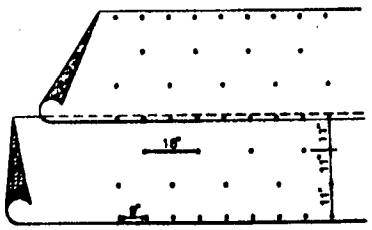

Wind conditions in some geographical locations may require increased fastening at critical areas of roof coverings, or the use of 3 in. plates. Factory Mutual data sheets 1-7, 1-28, 1-47, and 1-49 contain specific information regarding fastener and insulation pattern requirements. The responsibility for determining adequate fastening is that of the architect and/or engineer. Staple fastening systems are acceptable on wood decks when they comply with code requirements. Contact the Director of Technical Services for more information on base ply fastening.

10.2 FASTENER RECOMMENDATIONS

The following is a guide for fasteners to secure roofing sheets to nailable decks. TAMKO assumes no liability for the performance of the fastener or deck material.

Type of Roof Deck	Applicable Fasteners
Wood tongue-and-groove sheathing	Roofing nail, 1" cap min.
Plywood	Roofing nail, 1" cap min.
Gypsum-poured (1-7 Days) Gypsum-poured (Aged)	Nail-Tite Type A Tube-Loc or Do-All Nail Hardened, 1" cap min.
Precast-metal edge plank	Do-All Nail Hardened, 1" cap min.
Lightweight insulating concrete	Insuldeck Loc, Tube-Loc, or Es-Nail; 1" - 3" cap min.
Structural wood fiber	Insuldeck Loc, Es-Nail, or Tube-Loc Nail; 1" cap min.

For more information about fasteners, refer to the Single Ply Roofing Institutes' (SPRI) *Fastener Selection Guide* or *Fasteners*, available from the Roofing Industry Educational Institute (RIEI).

11.0 ASPHALT

All asphalt, including modified mopping-grade asphalts, must meet ASTM D-312.

TAMKO endorses and recommends an identification system for mopping-grade asphalts and the use of such identification information. This information should be printed on the asphalt packages or bills of lading covering bulk asphalt and should include:

1. ASTM D-312 Type I, II, III, IV
2. Flash point
3. Equiviscous temperature

TAMKO recommends that all asphalt be applied at the EVT temperature specific to the application method as printed on the asphalt cartons or bills of lading. (See Section 8.0 for AWAPLAN PREMIUM, AWAPLAN PREMIUM FR, AWAPLAN 170 FR, AWAPLAN 170 and VERSA-CAP FR temperature requirements.)

Where a TAMKO specification calls for Type II Asphalt, and Type II is not available in the local area, Type III may be substituted.

Asphalt temperature should not be held above the finished blowing temperature for more than 4 hours. Temperature measurement equipment should be checked at periodic intervals to ensure proper thermal treatment of the asphalt. Excessive heating can cause degradation of the asphalt.

Refer to individual specifications for asphalt type requirements.

ASTM D-312 Type	Kind of Asphalt	Max. Slope BUR	Max. Slope Modified
Type I	Dead Level Asphalt	N/A	N/A
Type II	Flat Asphalt	1/2"*	N/A
Type III	Steep Asphalt	3"	1/4"
Type IV	Special Steep Asphalt	3"	3"

*Except in FL, TX, NM, AZ, CA.

12.0 ROOFING CEMENTS, COATINGS, AND PRIMER

TAMKO now offers TAM-PRO!™ a complete line of asbestos-free professional grade cements and coatings to further meet your roofing requirements (see Section 3.2).

The following information represents the minimum requirements which must be met for acceptable cements and coatings to be used in a system which is to have a TAMKO roofing system guarantee:

Cold Process Adhesive	ASTM: 3019 Type III
Plastic Roofing Cement	ASTM: D-4586
Heavy-Bodied Flashing Cement	ASTM: D-4586
Wet or Dry Surface Cement	ASTM: D-4586
Fibered Roof Coating	ASTM: D-4479
Fibered Aluminum Roof Coating	ASTM: D-2824
Asphalt Primer	ASTM: D-41
U.L. Rated Emulsion	ASTM: D-1227
Nonfibered Roof Coating	FED: SS-A-701

Surfacing of the finished plies of fiberglass systems may be delayed up to 60 days without a glaze coat. Before the surfacing is applied, the roof must be dry and clean.

BECAUSE OF HEALTH CONCERNS OVER THE USE OF PRODUCTS CONTAINING ASBESTOS, TAMKO DOES NOT RECOMMEND, NOR ENDORSE, THE USE OF SUCH PRODUCTS IN ITS SPECIFICATIONS. HOWEVER, SUCH COATINGS ARE COMPATIBLE WITH OUR SYSTEMS.

13.0 APPLICATION OF SURFACING

Aggregate: Approximately 400 lbs. of gravel or 300 lbs. of slag should be applied in approximately 60 lbs. (±15%) of asphalt per 100 sq. ft. of roof area. No more asphalt should be spread or poured at one time than can be immediately covered with gravel or slag. Gravel and slag or other acceptable surfacing material should be 1/4 to 3/4 in. in size, substantially opaque, dry, and free from dust, loam or other foreign materials (comply with ASTM D-1863).

Smooth: Application of the surface coating for smooth-surfaced roofs shall follow TAMKO's recommendation for the particular specification used. The recommended product application rates are:

1. Fibered aluminum coating 1-1/2 to 2 gals./sq.
2. Emulsion coating 3 gals./sq.
3. Asphalt surface 20 to 25 lbs./sq.

Granules or chopped fiberglass may be added to an emulsion coating at the option of the designer. Asphalt glaze coating prior to the application of an aluminum or emulsion coating is not recommended except in drain areas. Smooth-surfaced roofing systems do require routine maintenance and periodic resurfacing. Coating resurfacing is the responsibility of the building owner. Frequency may vary depending on climatic and environmental conditions. TAMKO is not responsible for maintaining the roof coating.

On nailable decks, all plies of roofing membrane used in the construction of asphalt built-up roofs on slopes exceeding 1 in. per ft. should be backnailed approximately 4 in. down from the upper edge at intervals not to exceed 24 in.

On non-nailable decks or insulation, treated wood nailers should be provided on slopes exceeding 1 in. per ft. These nailers should be installed horizontally. Roofing felts are installed parallel to the slope. Roofing felts and all end laps are fastened at 6 in. intervals across the width of the sheet to the nailer (see Section 10.0). Spacing of wood nailers should not exceed the recommendations of the roof insulation manufacturer.

AWAPLAN PREMIUM, AWAPLAN PREMIUM FR, AWAPLAN HEAT WELDING, AWAPLAN 170 FR, AWAPLAN 170 or VERSA-CAP FR: Fastening of the membrane is required at 6 in. intervals across the top of the sheet on slopes above 3/4 in. per ft. The membrane should be applied parallel (i.e., strap) to the slope of the roof. Fastening requirements for slopes over 3 in. per ft. should be obtained from the Director of Technical Services.

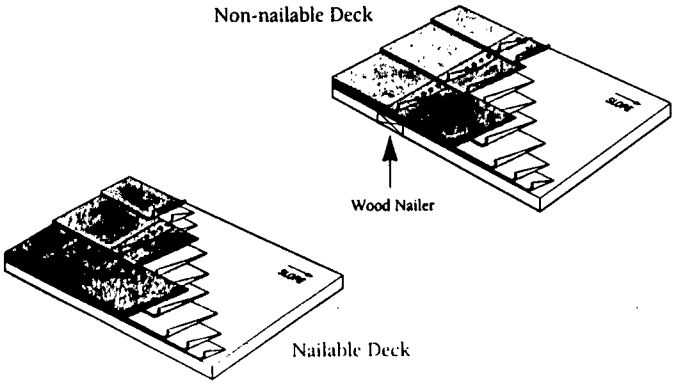

10.0 BASE PLY FASTENING

10.1 NAILING PATTERN

The standard nailing pattern for base sheets applied to nailable type decks is illustrated in the diagram to the right. Nail the sheets along the lap at intervals of no more than 9 in. Stagger-nail on 18 in. centers along two lines located 12 in. from each edge of the base sheet.

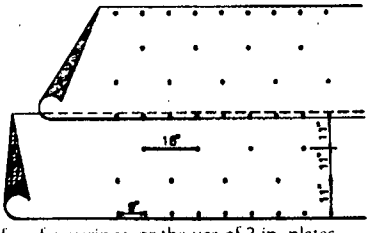

Wind conditions in some geographical locations may require increased fastening at critical areas of roof coverings, or the use of 3 in. plates. Factory Mutual data sheets 1-7, 1-28, 1-47, and 1-49 contain specific information regarding fastener and insulation pattern requirements. The responsibility for determining adequate fastening is that of the architect and/or engineer. Staple fastening systems are acceptable on wood decks when they comply with code requirements. Contact the Director of Technical Services for more information on base ply fastening.

10.2 FASTENER RECOMMENDATIONS

The following is a guide for fasteners to secure roofing sheets to nailable decks. TAMKO assumes no liability for the performance of the fastener or deck material.

Type of Roof Deck	Applicable Fasteners
Wood tongue-and-groove sheathing	Roofing nail, 1" cap min.
Plywood	Roofing nail, 1" cap min.
Gypsum-poured (1-7 Days) Gypsum-poured (Aged)	Nail-Tite Type A Tube-Loc or Do-All Nail Hardened, 1" cap min.
Precast-metal edge plank	Do-All Nail Hardened, 1" cap min.
Lightweight insulating concrete	Insuldeck Loc, Tube-Loc, or Es-Nail; 1" - 3" cap min.
Structural wood fiber	Insuldeck Loc, Es-Nail, or Tube-Loc Nail; 1" cap min.

For more information about fasteners, refer to the Single Ply Roofing Institutes' (SPRI) *Fastener Selection Guide* or *Fasteners*, available from the Roofing Industry Educational Institute (RIEI).

11.0 ASPHALT

All asphalt, including modified mopping-grade asphalts, must meet ASTM D-312.

TAMKO endorses and recommends an identification system for mopping-grade asphalts and the use of such identification information. This information should be printed on the asphalt packages or bills of lading covering bulk asphalt and should include:

1. ASTM D-312 Type I, II, III, IV
2. Flash point
3. Equiviscous temperature

TAMKO recommends that all asphalt be applied at the EVT temperature specific to the application method as printed on the asphalt cartons or bills of lading. (See Section 8.0 for AWAPLAN PREMIUM, AWAPLAN PREMIUM FR, AWAPLAN 170 FR, AWAPLAN 170 and VERSA-CAP FR temperature requirements.)

Where a TAMKO specification calls for Type II Asphalt, and Type II is not available in the local area, Type III may be substituted.

Asphalt temperature should not be held above the finished blowing temperature for more than 4 hours. Temperature measurement equipment should be checked at periodic intervals to ensure proper thermal treatment of the asphalt. Excessive heating can cause degradation of the asphalt.

Refer to individual specifications for asphalt type requirements.

ASTM D-312 Type	Kind of Asphalt	Max. Slope BUR	Max. Slope Modified
Type I	Dead Level Asphalt	N/A	N/A
Type II	Flat Asphalt	1/2"*	N/A
Type III	Steep Asphalt	3"	1/4"
Type IV	Special Steep Asphalt	3"	3"

*Except in FL, TX, NM, AZ, CA.

12.0 ROOFING CEMENTS, COATINGS, AND PRIMER

TAMKO now offers TAM-PRO,™ a complete line of asbestos-free professional grade cements and coatings to further meet your roofing requirements (see Section 3.2).

The following information represents the minimum requirements which must be met for acceptable cements and coatings to be used in a system which is to have a TAMKO roofing system guarantee:

Cold Process Adhesive	ASTM: 3019 Type III
Plastic Roofing Cement	ASTM: D-4586
Heavy-Bodied Flashing Cement	ASTM: D-4586
Wet or Dry Surface Cement	ASTM: D-4586
Fibered Roof Coating	ASTM: D-4479
Fibered Aluminum Roof Coating	ASTM: D-2824
Asphalt Primer	ASTM: D-41
U.L. Rated Emulsion	ASTM: D-1227
Nonfibered Roof Coating	FED: SS-A-701

Surfacing of the finished plies of fiberglass systems may be delayed up to 60 days without a glaze coat. Before the surfacing is applied, the roof must be dry and clean.

BECAUSE OF HEALTH CONCERNS OVER THE USE OF PRODUCTS CONTAINING ASBESTOS, TAMKO DOES NOT RECOMMEND, NOR ENDORSE, THE USE OF SUCH PRODUCTS IN ITS SPECIFICATIONS. HOWEVER, SUCH COATINGS ARE COMPATIBLE WITH OUR SYSTEMS.

13.0 APPLICATION OF SURFACING

Aggregate: Approximately 400 lbs. of gravel or 300 lbs. of slag should be applied in approximately 60 lbs. (±15%) of asphalt per 100 sq. ft. of roof area. No more asphalt should be spread or poured at one time than can be immediately covered with gravel or slag. Gravel and slag or other acceptable surfacing material should be 1/4 to 3/4 in. in size, substantially opaque, dry, and free from dust, loam or other foreign materials (comply with ASTM D-1863).

Smooth: Application of the surface coating for smooth-surfaced roofs shall follow TAMKO's recommendation for the particular specification used. The recommended product application rates are:

1. Fibered aluminum coating 1-1/2 to 2 gals./sq.
2. Emulsion coating 3 gals./sq.
3. Asphalt surface 20 to 25 lbs./sq.

Granules or chopped fiberglass may be added to an emulsion coating at the option of the designer. Asphalt glaze coating prior to the application of an aluminum or emulsion coating is not recommended except in drain areas. Smooth-surfaced roofing systems do require routine maintenance and periodic resurfacing. Coating resurfacing is the responsibility of the building owner. Frequency may vary depending on climatic and environmental conditions. TAMKO is not responsible for maintaining the roof coating.

ROOFING SYSTEMS (TGFU)—*Continued*

lan 170" is a suitable alternate for "Awaplan" in any of the following roofing systems us-
splan".
inimum tongue and groove board is a suitable alternate for 1/2 in. plywood decks with all
icked.
ase FR is a suitable alternate for the first base sheet in any of the following roofing sys-

ase is a suitable alternate base sheet for use in any Roofing System limited to use over
ustible deck.
an Verse-Smooth" is a suitable alternate for "Awaplan Smooth" in any of the "Awaplan"
isted below.
ene or phenolic insulation can be used in any of the following insulated noncombustible
hen covered with a minimum thickness of 1/2 in. perlite or wood fiber board.

ASPHALT FELT SYSTEMS WITH HOT ROOFING ASPHALT

y IV" ply sheet can replace "Tam-Glass" in the following Class A, B or C roofing systems.
Chan" venting base sheet can replace "Glass-Base" base sheet in the following Class A, B
ng systems when limited to noncombustible decks.
-Ply" is a suitable alternate to Glass Base in any of the following systems.
owing non-combustible systems may be installed over a minimum 1/2 Type X gypsum
chanically fastened to a combustible deck for the rating to be maintained.
otherwise indicated, these constructions may utilize any thickness of perlite, glass fiber,
ane, isocyanurate, combination isocyanurate/perlite or polyurethane/perlite insulation hot
r nailed. Wood fiber insulation is a suitable substitute on noncombustible decks only.

Class A

k: NC — Incline: 3
e Sheet (Optional): 1 or more layers of Vent-Ply, hot mopped in place.
Sheets: 3 layers Type 15 perforated asphalt organic-felt ("Tri-Six") or 4 layers convention-
ype 15 perforated asphalt organic-felt, hot mopped at 25 lb/sq/layer.
facing: Gravel, crushed stone or slag.

k: C-15/32 — Incline: 1
e Sheet: Type 15 asphalt organic felt base sheet, hot mopped.
Sheets: 3 layers Type 15 perforated asphalt organic-felt, hot mopped.
facing: Gravel, crushed stone or slag.

k: C-15/32 — Incline: 3
e Sheet: Type G2 "Glass Base", "Tam Ply IV", "Vapor Chan", "43 lb Base Sheet" or "Tam
s Premium" hot mopped or nailed.
Sheets: Min 2 layers Type G1 "Tam-Glass Premium", hot mopped.
facing: Gravel in a flood coat of hot roofing asphalt at 60 lb/sq.

k: NC — Incline: 3
e Sheet: Type G1 "Tam-Glass Premium" ply sheet or Type G2 "Vent-Ply" base sheet, hot
ped or nailed.
Sheets: Minimum 2 layers Type G1 "Tam-Glass Pre[illegible]m", hot mopped.
facing: Gravel in a flood coat of hot roofing aspha[illegible]0 lb/sq.

k: C-15/32 — Incline: 3
lation: 1 in. minimum glass fiber or perlite, nailed or sprinkle mopped.
e Sheet (Optional): Type G2 base sheet, "43 lb. Base Sheet", "Glass Base Vent-Ply"
ype G1 ply sheet, "Tam-Glass Premium", hot mopped or nailed.
Sheets: 3 layers Type G1 "Tam-Glass Premium" or Tam Ply IV, hot mopped.
facing: Gravel in a flood coat of hot roofing asph[illegible]t 60 lb/sq.

k: NC — [illegible]ne: 1-1/2
e Sheet: Type G2 "Glass Base", "Tam-Glass Premium" or "Tam Ply IV", hot mopped.
Sheets: 2 or more layers Type G1 "Tam-Glass Premium" or "Tam Ply IV", hot mopped.
facing: Type G3 "Tam-Cap", hot mopped.

c: NC — Incline: 2
lation (Optional): 1-5/16 – 3-1/4 in. max. in. glass fiber perlite or woodfiber, isocyanurate
kle mopped.
e Sheet (Optional): 1 or more Type G2 "Vent Ply", "Vapor Chan", "Tam-[illegible] Premium",
Ply IV" or "Glass Base" hot mopped.
eets: 1 layer "Awaplan" smooth surface (modified bitumen), hot mopped, or "Awaplan"
e surface (modified bitumen), heat fused.
facing: Type G3 "Tam-Cap", hot mopped.

c: C-15/32 — Incline: 1/4
e Sheet: Type 15 "43 lb Base Sheet", "Tam-Glass Premium", Tam Ply IV" or "Glass Base",
d.
Sheets: 2 or more layers Type G1 "Tam-Glass Premium", hot mopped.
facing: Type G3 "Tam-Cap", hot mopped.

c: C-15/32 — Incline: 1
e Sheet: One or more layers of Type G2 "Glass Base", "Versa Base" or "Vapor Chan", hot
ped or mechanically fastened in place.
Sheet: One or more layers of Type G2 "Tam-Ply IV" or "Tam-Glass Premium", hot mopped
ace.
Sheet: Type G3 "Tam-Cap", hot mopped in place.

c: C-15/32 — Incline: 2
e Sheet: One or more layers of Type 15 "#43 Base Sheet", hot mopped or mechanically
ned in place.
Sheet: Two or more plies of Type G2 "Tam-Ply IV" or "Tam-Glass Premium", hot mopped
ace.
Sheet: Type G3 "Tam-Cap", hot mopped in place.

c: C-15/32 — Incline: 2
e Sheet: One or more layers of Type G2 "Glass Base", "Versa Base" or "Vapor Chan", hot
ped or mechanically fastened in place or gravel, 60 lbs/sq in. hot roofing asphalt.
brane: One layer of "Awaplan Smooth" (modified bitumen), hot mopped in place.
Sheet: Type G3 "Tam-Cap", hot mopped in place.

c: NC — Incline: 3
Sheet: One or more plies of "Tam-Ply IV", hot mopped or mechanically fastened.

ROOFING SYSTEMS (TGFU)—*Continued*

Ply Sheets: One or more plies of "Tam-Ply IV", hot mopped or mechanically fastened.
Surfacing: Gravel, crushed stone or crushed slag, in a flood coat of hot roofing asphalt.

Class B

1. Deck: C-15/32 — Incline: 1
Base Sheet: One or more plies of Type G2 "Glass Base", Type 15 "#43 Base", or Type G2 "Vapor Chan", hot mopped or mechanically fastened in place.
Cap Sheet: Type G3 "Tam-Cap", hot mopped in place.

2. Deck: C-15/32 — Incline: 3
Base Sheet: One or more plies of Type G2 "Glass Base", Type 15 "#43 Base", "Versa Base" or Type G2 "Vapor Chan", hot mopped or mechanically fastened in place.
Ply Sheet: One or more plies of Type G2 "Tam-Ply IV", "Tam-Glass Premium" or "Versa Base", hot mopped in place.
Cap Sheet: Type G3 "Tam-Cap", hot mopped in place.

3. Deck: C-15/32 — Incline: 1/2
Base Sheet: One or more plies of Type G2 "Glass Base", Type 15 "43 Base", "Versa Base" or Type G2 "Vapor Chan", hot mopped or mechanically fastened in place.
Cap Sheet: Type G3 "Tam-Cap", hot mopped in place.

Class C

1. Deck: C-15/32 — Incline: 1/2
Insulation: 1 – 1-15/16 in. glass fiber, perlite or wood fiber, nailed or sprinkle mopped.
Ply Sheet: 3 layers Type G1 "Tam-Glass Premium" or "Tam Ply IV", hot mopped.
Surfacing: Glaze coat hot roofing asphalt.

2. Deck: C-15/32 — Incline: 1/2
Base Sheet: Type G2 "Glass Base", "Tam-Glass Premium", "Tam Ply IV" or "43 lb. Base", nailed or spot mopped.
Ply Sheet: 3 layers Type G1 "Tam-Glass Premium" or "Tam-Ply IV", hot mopped.
Surfacing: Glaze coat hot roofing asphalt.

3. Deck: C-15/32 — Incline: Unlimited
Base Sheet: One or more plies of Type G2 "Glass Base", "#43 Base", "Versa Base" or "Vapor Chan", hot mopped or mechanically fastened.
Ply Sheet: One or more plies of Type G2 "Tam-Ply IV" or "Awaplan Smooth" (modified bitumen), hot mopped in place.
Cap Sheet: Type G3 "Tam-Cap", hot mopped in place.

COMBINATION HOT AND COLD SYSTEMS

Unless otherwise indicated, these constructions may [illegible]tilize any thickness of perlite, [illegible]s fiber, polyurethane, isocyanurate, combination isocyanurate/p[illegible]lite or polyurethane/perlite ins[illegible]tion hot mopped or nailed. Wood fiber insulation is a suitable substitute on noncombustible decks only.

Class A

1. Deleted.
2. Deck: NC — Incline: 1-1/2
Ply Sheets: 3 or more layers Type G1 "Tam-Glass Premium" or "Tam Ply IV", hot mopped.
Surfacing: Cold coating, Grundy's "Fibered Asphalt Emulsion Roof Coating, 039" at 3 gal/sq.
3. Deck: C-15/32 — Incline: 1
Insulation: 1 in. minimum glass fiber, perlite, wood fiber, p[illegible]yurethane, isocyanurate or combination isocyanurate/perlite nailed or sprinkle mopped.
Base Sheet (Optional): Type G2 "Glass-Base" or Type G1 ply sheet "Tam-Glass" nailed or hot mopped.
Ply Sheets: 3 layers Type G1 "Tam-Glass Premium", hot mopped.
Surfacing: Cold coating Pure Asphalt's "Fibered Asphalt Emulsion Roof Coating" at 3 gal/sq.
4. Deck: C-15/32 — Incline: 1-1/2
Insulation (Optional): Glass fiber, perlite, 2 in. max.
Base Sheet: Type G2 "Glass Base", "43 lb. Base" or "Vapor Chan", nailed, sprinkle or h[illegible] mopped.
Ply Sheets: 3 l[illegible]ers Type G1 "Tam-Glass Premium" or "Tam-Ply IV", hot mopped.
Surfacing: Cold coating Pure Asphalt's "Fibered Asphalt Emulsion Roof Coating" at 3 gal/sq.
5. Deck: C-15/32 — Incline: 3
[illegible]tion: Glass fiber, wood fiber or perlite 2 in. max.
Base Sheet: Type 15 "43 lb Base Sheet" or "Glass Base" nailed or hot mopped.
Ply Sheet: 3 layers Type G1 "Tam-Glass Premium", hot mopped.
Surfacing: Cold coating, Pure Asphalt's "Fibered Asphalt Emulsion Roof Coating" at 3 gal/sq.

Class B

1. Deck: C-15/32 — Incline: 3
Base Sheet: One or more plies of Type 15 "#43 Base Sheet", hot mopped or mechanically fastened in place.
Ply Sheet: Two or more plies of Type G2 "Tam-Ply IV" or "Tam-Glass Premium", hot mopped in place.
Surfacing: Grundy's "Fibered Aluminum Roof Coating", [illegible]plied at 1-1/2 gal/sq.
2. Deck: C-15/32 — Incline: 1/4
Base Sheet: One or more plies of Type G2 "Glass Base", "Versa Base" or "Vapor Chan", hot mopped or mechanically fastened in place.
Membrane: One layer of "Awaplan Smooth", "Awaplan 170", "Awaplan" or "Awaplan FR" (modified bitumen), hot mopped in place.
Surfacing: Grundy's "Fibered Aluminum Roof Coating", applied at 1-1/2 gal/sq.
3. Deck: C-15/32 — Incline: 2
Cap Sheet: Type G3 "Tam-Cap" (inverted), mechanically fastened in place.
Membrane: One layer of "Awaplan", "Awaplan 170" or "Awaplan FR" (modified bitumen), hot mopped in place.
Surfacing: Grundy's "Fibered Aluminum Roof Coating", applied at 1-1/2 gal/sq.

Class C

1. Deck: C-15/32 — Incline: 3
Insulation: 1 in. minimum glass fiber, perlite, wood fiber, polyurethane, isocyanurate or combination isocyanurate/perlite nailed or sprinkle mopped.
Ply Sheets: 3 or more layers Type G1 "Tam-Glass Premium", hot mopped.
Surfacing: Cold coating, Pure Asphalt's "Fibered Asphalt Emulsion Roof Coating" at 3 gal/sq.

Roofing System CLASS A Approved

UL Book Directory

(TGFU)—*Continued*

20", Type G2 "GAFGLAS #75" or "Ruberoid 20
f fastened.
30 FR" hot mopped in place.
Inclines: 1
d fiber, perlite, or glass fiber any thickness, hot
GAFGLAS #75" hot mopped or mechanically
" or "Ruberoid 20 FR", hot mopped in place
30 FR", hot mopped in place.
y Adhered
Inclines: 1/2
erlite, wood fiber, glass fiber, isocyanurate
a/urethane composite, wood fiber/isocyanurate

G-2 or G-3 base sheet, hot mopped or mechani-

id Torch" (smooth or granule), "Ruberoid Torch
nule) or "Ruberoid Mop Plus" (granule).
/2 gal/sq.
Inclines: 1/2
erlite, wood fiber, glass fiber, isocyanurate
a/urethane composite, wood fiber/isocyanurate

r G3.
ype G1.
d Torch" (smooth or granule), "Ruberoid Torch
nule) or "Ruberoid Mop Plus" (granule).
/2 – 3 gal/sq.
C
Inclines: 2
fiber, glass fiber, isocyanurate, urethane, aerated/
posite, wood fiber/isocyanurate composite

r G3.
ype G1.
d Torch" (smooth or granule), "Ruberoid Torch
nule) or "Ruberoid Mop Plus" (granule).

Inclines: 2
r G3.
ype G1.
Torch" (smooth or granule) or "Ruberoid Torch

l/sq.
Inclines: 1/2
ber or wood fiber, any thickness.
Type G1, G2 or G3.
d Torch" (smooth or granule), "Ruberoid Torch
nule) or "Ruberoid Mop Plus" (granule).
t 1-3 gal/sq or Grundy Ind. 20 F Emulsion at 3

Inclines: 1
iber, glass fiber, isocyanurate, urethane, aerated/
posite, wood fiber/isocyanurate composite

G3.
pe G1.
l Torch" (smooth or granule), "Ruberoid Torch
nule) or "Ruberoid Mop Plus" (granule).
Inclines: 1/2
Type G1, G2 or G3.
l Torch" (smooth or granule), "Ruberoid Torch
ule) or "Ruberoid Mop Plus" (granule).
Inclines: 2
ber, glass fiber, isocyanurate, urethane, aerated/
osite, wood fiber/isocyanurate composite

r G3, mechanically attached with above

uberoid Mop (Granule), Adhered in a uniform
n No. 8160-900 applied at 1-2 gal/sq.

Inclines: 2
G3.
e G1.
Mop FR". Adhered in a uniform coating of
) applied at 1-2 gal/sq.
sq.
Inclines: 1
ber, glass fiber, isocyanurate, urethane, aerated/
osite, wood fiber/isocyanurate composite

ROOFING SYSTEMS (TGFU)—*Continued*

Base Sheet: One or more layers of Type G2 or G3.
Membrane: One or more layers of "Ruberoid Mop FR Adhered in a uniform coating of Kamak Inc. No. 81 or Gibson-Homan No. 8160-900 applied at 1-2 gal/sq.
Surfacing: Grundy Ind. 20 F emulsion, 3 gal/sq.

9. Deck: NC
Inclines: 1/2
Base Sheet: One or more layers of Type G1, G2 or G3.
Membrane: One or more layers of "Ruberoid Mop FR, Adhered in a uniform coating of Kamak Inc. No. 81 or Gibson-Homan No. 8160-900 applied at 1-2 gal/sq.

10. Deck: C-15/32
Inclines: 1
Insulation (Optional): Polyisocyanurate, wood fiber, perlite, glass fiber any thickness, hot mopped or mechanically fastened.
Base Sheet: One or more plies of "Ruberoid 20", Type G2 "GAFGLAS #75 or "Ruberoid 20 FR" base sheets, hot mopped or mechanically fastened.
Membrane: One or more plies of "Ruberoid 20", hot mopped in place.

GARDNER ASPHALT CORP, TAMPA FL 33675 R13663 (N)

COLD APPLICATION SYSTEMS

Base sheets are mechanically fastened to combustible decks. Ply sheets are set in GS Roofing Products' "Fibrex Cement" at 1-1/2 gal/sq.

Class A

1. Deck: NC
Inclines: 2
Protective Coating: "Nonfibered Emulsion Roof Coating" 10 gal/sq with 3.3 lbs glass fiber or 8 gal/sq with 2/6 lbs glass fiber. "Nonfibered Emulsion Roof Coating" and glass fiber are sprayed simultaneously from a special gun.
Surfacing: "Professional Fibered Aluminum Roof Coating", 1-1/2 gal/sq.

2. Deck: C-15/32
Inclines: 1
[illegible]

COMBINATION HOT AND COLD SYSTEMS

Class A

Inclines: 1/2

1. Deck: NC
Base Sheet: Type G1 or G2, nailed or sprinkle mopped.
Ply Sheet: Two or more layers Type G1 or G2, applied with hot roofing asphalt.
Surfacing: "Asphalt Emulsion Aluminum Roof Coating", 1 to 1-1/3 gal/sq.

2. Deleted.

Inclines: 1

3. Deck: NC
Ply Sheet: Three plies OCF "Perma-Ply IV", "Perma-Ply R" or "Perma Ply No. 28", applied with hot roofing asphalt.
Surfacing: "Fibered Emulsion Roof Coating", 3 gal/sq.

Inclines: 1

4. Deck: NC
Insulation (Optional): Polyisocyanurate, phenolic, wood fiber, glass fiber, perlite, any thickness.
Base Sheet: One ply Type G1, mechanically fastened or hot mopped.
Ply Sheet: Two or more plies Type G1, hot mopped.
Surfacing: "Asbestos Free Asphalt Emulsion Aluminum Roof Coating", 2 gal/sq.

Inclines: 1

5. Deck: NC
Insulation (Optional): Polyisocyanurate, phenolic, glass fiber, wood fiber, perlite, any thickness.
Base Sheet: One ply Type G1, mechanically fastened or hot mopped.
Ply Sheet: Two or more plies Type G1, hot mopped.
Surfacing: "Asbestos Free Emulsion Roof Coating", 3 gal/sq.

Inclines: 1

6. Deck: C-15/32
Vapor Barrier (Optional): One ply Type G2, mechanically fastened or hot mopped.
Insulation (Optional): Phenolic, glass fiber, polyisocyanurate, wood fiber, perlite, any thickness.
Base Sheet: One ply Type G2, mechanically fastened or hot mopped.
Ply Sheet: Two or more plies Type G1, hot mopped.
Coating: "Nonfibered Emulsion Roof Coating", 9 gal/sq, min, 3 lb glass fiber reinforcement.
Surfacing (Optional): Any of the following: "Asbestos Free Asphalt Emulsion Aluminum Roof Coating", 1-1/2 gal/sq, "AF Fibrated Aluminum Roof Coating", 1-1/2 gal/sq or "Professional Aluminum Roof Paint", 1 gal/sq.

Inclines: 1

7. Deck: NC
Insulation (Optional): Phenolic, glass fiber, polyisocyanurate, wood fiber, perlite, any thickness.
Base Sheet: One ply Type G1, mechanically fastened or hot mopped.
Ply Sheet: Two or more plies Type G1, hot mopped.
Coating: "Fibered Emulsion Roof Coating", 3 gal/sq.
Surfacing: "AF Fibrated Aluminum Roof Coating", 1-1/2 gal/sq.

Inclines: 1/2

8. Deck: NC
Insulation (Optional): Phenolic, glass fiber, polyisocyanurate, wood fiber, perlite, any thickness.
Base Sheet: One ply Type G1, mechanically fastened or hot mopped.
Ply Sheet: Two or more plies Type G1, hot mopped.

UL Book Directory

Emulsion Coating Class A Aproval

BUILDING PERMIT

City of Miami Springs

201 Westward Drive
Miami Springs, Florida 33166
(305) 805-5030

PERMIT NUMBER
RES21-1143

PERMIT TYPE: **BUILDING** PERMIT SUB TYPE : **ADDITION**	Issued Date: **5/18/2022** Expired Date: **11/14/2022**	TAX MAP NO: **05-3118-016-1590** BLDG USE GROUP:
JOB ADDRESS: **200 ESPLANADE DRIVE** DESCRIPTION: **ADDITION TO RESIDENCE AND OVERALL REMODELING TO EXIST RES.**		
ZONED AS: TOTAL WORK VALUE:**$0.00**	TOTAL SQFT:**0** TYPE OF CONSTRUCTION:	
OWNER: **JOVANY JIMENEZ & AMBAR SARA PREVAL** MAILING ADDRESS: **200 N ESPLANADE DR MIAMI SPRINGS, FL 33166**		PHONE: **(786)587-7391** FAX:
CONTRACTOR: MAILING ADDRESS: ,		PHONE: FAX:

FEES

DESCRIPTION	ACCOUNT	QUANTITY	PAID AMOUNT
BUILDING PERMIT FEE	145-0000-322.00-00	0	$5275.00
CODE COMPLIANCE	145-0000-217-40-00	0	$108.00
DBPR	145-0000-217.60-00	0	$81.00
DCA	145-0000-217-50-00	0	$54.00
MISCELLANEOUS PERMIT FEE	145-0000-329.09-00	0	$100.00
RESIDENTIAL REVIEW	001-0000-329.13-00	0	$100.00
RESIDENTIAL REVIEW	145-0000-329.06-00	0	$100.00
SCANNING	145-0000-220.27-00	0	$187.00
TECHNOLOGY	145-0000-220.26-00	0	$540.00
UPFRONT FEE	145-0000-322.00-00	0	$125.00
			TOTAL: $6,670.00

ALL WORK TO CONFORM TO THE CURRENT EDITION OF THE INTERNATIONAL BUILDING CODE (IBC).
NEXT DAY INSPECTION REQUESTS MUST BE IN BEFORE 3 P.M.
NEXT DAY INSPECTION BY BLD OFFICICAL MUST BE IN BY 12 NOON

Building Official:

Issued By: **EMILY MURILLO**

OFFICE COPY
CITY OF MIAMI SPRINGS

MIAMI-DADE COUNTY
PRODUCT CONTROL SECTION
11805 SW 26 Street, Room 208
Miami, Florida 33175-2474
T (786) 315-2590 F (786) 315-2599
www.miamidade.gov/economy

DEPARTMENT OF REGULATORY AND ECONOMIC RESOURCES (RER)
BOARD AND CODE ADMINISTRATION DIVISION

CITY OF MIAMI SPRINGS
BUILDING DEPARTMENT

NOTICE OF ACCEPTANCE (NOA)

DEC 10 2021
RECEIVED

Nu-Vue Industries, Inc.
1055 East 29 Street
Hialeah, Florida 33013

SCOPE: This NOA is being issued under the applicable rules and regulations governing the use of construction materials. The documentation submitted has been reviewed and accepted by Miami-Dade County RER-Product Control Section to be used in Miami Dade County and other areas where allowed by the Authority Having Jurisdiction (AHJ).

This NOA shall not be valid after the expiration date stated below. The Miami-Dade County Product Control Section (In Miami Dade County) and/or the AHJ (in areas other than Miami Dade County) reserve the right to have this product or material tested for quality assurance purposes. If this product or material fails to perform in the accepted manner, the manufacturer will incur the expense of such testing and the AHJ may immediately revoke, modify, or suspend the use of such product or material within their jurisdiction. RER reserves the right to revoke this acceptance if it is determined by Miami-Dade County Product Control Section that this product or material fails to meet the requirements of the applicable building code.

This product is approved as described herein and has been designed to comply with the Florida Building Code, including the High Velocity Hurricane Zone.

DESCRIPTION: Series NVTA, NVTAS, NVBH, NVUH, NVRT and NVTH Steel Wood Connectors

APPROVAL DOCUMENT: Drawing No. **NU-2**, titled "NVTA and NVTAS, NVBH 24 and NVUH 26, NVRT and NVTH", sheets 1 through 4 of 4, dated 06/25/2020, prepared by Nu-Vue Industries, Inc., signed and sealed by Vipin N. Tolat, P.E., bearing the Miami-Dade County Product Control revision stamp with the Notice of Acceptance (NOA) number and expiration date by the Miami-Dade County Product Control Section.

MISSILE IMPACT RATING: None

LABELING: A permanent mark with the manufacturer's name, acronym or logo is to be located on each unit. A permanent label with the manufacturer's name or logo, city, state, model/series, and the statement reading 'Miami-Dade County Product Control Approved' is to be located on each packaging carton.

RENEWAL of this NOA shall be considered after a renewal application has been filed and there has been no change in the applicable building code negatively affecting the performance of this product.

TERMINATION of this NOA will occur after the expiration date or if there has been a revision or change in the materials, use, and/or manufacture of the product or process. Misuse of this NOA as an endorsement of any product, for sales, advertising or any other purposes shall automatically terminate this NOA. Failure to comply with any section of this NOA shall be cause for termination and removal of NOA.

ADVERTISEMENT: The NOA number preceded by the words Miami-Dade County, Florida, and followed by the expiration date may be displayed in advertising literature. If any portion of the NOA is displayed, then it shall be done in its entirety.

INSPECTION: A copy of this entire NOA shall be provided to the user by the manufacturer or its distributors and shall be available for inspection at the job site at the request of the Building Official.

This NOA **renews** and **revises NOA # 17-0802.09** and consists of this page 1 and evidence pages E1, E-2 and E3, as well as approval document mentioned above.

The submitted documentation was reviewed by **Carlos M. Utrera, P.E.**

MIAMI-DADE COUNTY APPROVED

NOA No: 20-0519.03
Expiration Date: July 30, 2025
Approval Date: July 30, 2020
Page 1

NOTICE OF ACCEPTANCE: EVIDENCE SUBMITTED

1. EVIDENCE SUBMITTED UNDER PREVIOUS NOAs

A. DRAWINGS

1. Drawing No. **NU-2**, titled "NVTA and NVTAS, NVBH 24 and NVUH 26, NVRT and NVTH", sheets 1 through 4 of 4, dated 04/15/2015, prepared by Nu-Vue Industries, Inc., signed and sealed by Vipin N. Tolat, P.E.

B. TEST *"Submitted under NOA No. 05-0701.04"*

Test reports on wood connectors per ASTM D1761 by Product Testing, Inc., signed and sealed by C. R. Caudel, P.E. and S. E. Black, P.E.

	Report No.	Wood Connector	Direction	Date
1.	PT 02-4073	NVTA	Upward	11/06/02
2.	PT 02-4075	NVTA	Upward	11/07/02
3.	PT 02-4074	NVTA	Upward	11/06/02
4.	PT 02-3938	NVTA	Upward	08/06/02
5.	PT 03-4177	NVRT36	Upward	02/03/03
6.	PT 03-4202	NVRT36-T	Upward	02/19/03
7.	PT 03-4271	NVRT36-T	Upward	03/27/03
8.	PT 03-4270	NVRT24-T	Upward	03/27/03
9.	PT 02-4095	NVUH26	Up & Downward	01/17/03
10.	PT 02-4096	NVBH24	Up &Downward	12/03/02
11.	31-22456.0002	NVTA & NVTAS	Lateral	07/06/02
12.	PT 04-4698	NVTH24	Upward Parallel/Perpendicular	04/15/04
13.	PT 04-5036	NVTH24	Upward Load	12/10/04

C. CALCULATIONS *"Submitted under NOA No. 04-1202.01"*

Report of Design Capacities prepared by Vipin N. Tolat, P.E.

	Product Model	No. of Pages	Date	Signature
1.	NVBM24	7 through 8	05/05/03	V. N. Tolat, P.E
2.	NVRT	9 through 14	05/05/03	V. N. Tolat, P.E.
3.	NVTA & NVTAS	1 through 6	05/05/03	V. N. Tolat, P.E.
4.	NVTA & NVTAS	1 through 14	02/06/03	V. N. Tolat, P.E.
5.	NVRT	15 through 15	07/07/03	V. N. Tolat, P.E.

D. QUALITY ASSURANCE

1. Miami-Dade Department of Regulatory and Economic Resources (RER)

E. MATERIAL CERTIFICATIONS

1. None.

Carlos M. Utrera, P.E.
Product Control Examiner
NOA No: 20-0519.03
Expiration Date: July 30, 2025
Approval Date: July 30, 2020

NOTICE OF ACCEPTANCE: EVIDENCE SUBMITTED

F. STATEMENTS

1. Statement letter of code conformance to 2010 and 5th (2014) edition of the FBC, issued by Vipin N. Tolat, P.E., dated 04/29/2015, signed and sealed by Vipin N. Tolat, P.E.

   "Submitted under NOA No. 04-1202.01"

2. No Financial Interest and code compliance letter issued by Vipin N. Tolat, P.E., on 03/26/2003 signed and sealed by Vipin N. Tolat, P.E.

2. EVIDENCE SUBMITTED UNDER NOA # 17-0802.09

A. DRAWINGS

1. Drawing No. **NU-2**, titled "NVTA and NVTAS, NVBH 24 and NVUH 26, NVRT and NVTH", sheets 1 through 4 of 4, dated 07/17/2017, prepared by Nu-Vue Industries, Inc., signed and sealed by Vipin N. Tolat, P.E.

B. TEST

1. None.

C. CALCULATIONS

1. None.

D. QUALITY ASSURANCE

1. Miami-Dade Department of Regulatory and Economic Resources (RER)

E. MATERIAL CERTIFICATIONS

1. None.

F. STATEMENTS

1. Statement letter of code conformance to the 5th Edition (2014) and 6th Edition (2017) FBC and of no financial interest, issued by Vipin N. Tolat, P.E., dated 07/25/2017, signed and sealed by Vipin N. Tolat, P.E.

Carlos M. Utrera, P.E.
Product Control Examiner
NOA No: 20-0519.03
Expiration Date: July 30, 2025
Approval Date: July 30, 2020

NOTICE OF ACCEPTANCE: EVIDENCE SUBMITTED

3. NEW EVIDENCE SUBMITTED

A. DRAWINGS

1. Drawing No. **NU-2**, titled "NVTA and NVTAS, NVBH 24 and NVUH 26, NVRT and NVTH", sheets 1 through 4 of 4, dated 06/25/2020, prepared by Nu-Vue Industries, Inc., signed and sealed by Vipin N. Tolat, P.E.

B. TEST

1. None.

C. CALCULATIONS

1. Verification calculations for compliance with the ASTM D7147-05 and ASTM D7147-11 prepared by Vipin N. Tolat, P.E. dated 04/28/2020, signed and sealed by Vipin N. Tolat, P.E.

D. QUALITY ASSURANCE

1. Miami-Dade Department of Regulatory and Economic Resources (RER)

E. MATERIAL CERTIFICATIONS

1. None.

F. STATEMENTS

1. Statement letter of code conformance to the 6th Edition (2017) and the 7th Edition (2020) FBC and of no financial interest, issued by Vipin N. Tolat, P.E., dated 06/25/2020, signed and sealed by Vipin N. Tolat, P.E.

Carlos M. Utrera, P.E.
Product Control Examiner
NOA No: 20-0519.03
Expiration Date: July 30, 2025
Approval Date: July 30, 2020

CITY OF MIAMI SPRINGS

BUILDING DEPARTMENT
201 Westward Drive, Second Floor
Miami Springs, FL 33166
Office: 305-805-5030 Fax: 305-805-5036
www.miamisprings-fl.gov

Date: 12/10/21 Clerk: EM

☑ Master Permit 21-1143

JOB ADDRESS 200 Esplanade Dr **PERMIT APPLICATION** ☐ Sub-Permit

1. OWNER INFORMATION
Owner AMBAR PREVAL
Address 200 N. ESPLANADE Dr.
City MIAMI SPRINGS ST FL Zip 33166
Driver License No. /I.D.
Phone No. 786 587 7391

2. CONTRACTOR INFORMATION
Company Name
Qualifier Name H10
Address
City ST Zip
Lic. No. Phone No.

3. PERMIT TYPE (Choose only One)
☒ Building
☐ Electrical
☐ Mechanical
☐ Plumbing/Gas
☐ Sign
☐ Roofing

4. CHANGE TO AN EXISTING PERMIT (Choose only One)
☐ Change Contractor
☐ Extension
☐ Renewal
☐ Shop Drawing
☐ Lost Plans

5. TYPE OF IMPROVEMENT (Choose only One)
☐ New Construction ☐ Re-roof ☐ Pool
☒ Addition Attached ☐ Driveway ☐ Shed
☐ Alteration Interior ☐ Fence ☐ Other:
☐ Alteration Exterior ☐ Window
☐ Repair/Replace ☐ Door
☐ Demolition/Partial ☐ Shutters

6. ARCHITECT/ ENGINEER INFO
Name GUILLERMO R. GONZALEZ
Address 13400 SW 134TH AVE
City MIAMI ST FL Zip Code 33186
Lic. No. 13960 Discipline R.A.
Phone No. 305 484 8171

7. CONTACT
Name AMBAR PREVAL
E-mail AMBARPREVAL@GMAIL.COM
Phone No. 786 587 7391

8. LEGAL/USE/WORK VALUE
Folio No. 05-3118-016-1590 No. of Units 1
Lot 1&2 Block 58 Subdivision CINEHA PARK COUNTRY CLUB ESTATES ADDITION
Current Use of Property SINGLE FAMILY RES
Description of Work ADDITION TO RESIDENCE AND OVER ALL REMODELING TO EXIST. RES.
Square FT. NEW 467 Sq Linear FT. 7758
Work Value 80,000 Building Value $90,000
Flood Zone AH-7.0' Base Flood Elevation 7.0'

Application is hereby made to obtain a permit to do the work and/or installations as indicated. I certify that no work or installation has commenced prior to the issuance of a permit and that all work will be performed to meet the standards of all laws regulating construction in this jurisdiction. I understand that a separate permit must be secured for Electrical, Plumbing, Signs, Wells, Pools, Furnaces, Boilers, Heaters, Tanks, Air Conditioning, Driveways, Portable Storage Units, etc.
Owner's Affidavit: I certify that all the foregoing information is accurate and that work will be done in compliance with all applicable laws regulating construction and zoning.

NOTICE REGARDING BUILDING PERMIT APPLICATIONS
Completion and submission of a Building Permit Application is a requirement of securing a City Building Permit. The City will rely upon the information contained in the Application in determining whether a City Building Permit should be issued. The submission of inaccurate, misleading or misrepresented information in the Application shall subject the Building Permit to denial, suspension or revocation, and the individual applying for the permit to all appropriate fines, penalties and other punishments authorized by law. KINDLY GOVERN YOURSELF ACCORDINGLY.
WARNING TO OWNER: YOUR FAILURE TO RECORD A NOTICE OF COMMENCEMENT MAY RESULT IN YOU PAYING TWICE FOR IMPROVMENTS TO YOUR PROPERTY. IF YOU INTEND TO OBTAIN FINANCING, CONSULT WITH YOUR LENDER OR AN ATTORNEY BEFORE RECORDING YOUR NOTICE OF COMMENCEMENT.

Jovany Jimenez
PRINT NAME
OWNERS SIGNATURE
SWORN TO AND SUBSCRIBED BEFORE ME BY: (PRINT NAME)
Jovany Jimenez
BY MEANS OF [ ] PHYSICAL PRESENCE OR [ ] ONLINE NOTARIZATION AND PRODUCED
FLDL
As identification, this 10 day of December 21
Notary's Signatures
Printed Name of Notary Emily Murillo

EMILY MURILLO
MY COMMISSION # HH 123670
EXPIRES: April 28, 2025
Bonded Thru Notary Public Underwriters

QUALIFIER INFORMATION
PRINT NAME
OWNERS SIGNATURE
SWORN TO AND SUBSCRIBED BEFORE ME BY: (PRINT NAME)
BY MEANS OF [ ] PHYSICAL PRESENCE OR [ ] ONLINE NOTARIZATION AND PRODUCED
As identification, this day of 20
Notary's Signatures
Printed Name of Notary

DO NOT WRITE BELOW – FOR OFFICE USE ONLY

✓	TRADE	APPROVED/DATE	DISAPPROVED/DATE
	Zoning	CH 12/16/21	
	Structural	OK	1/13/22 4/13/22 5/11/22
	Building	JF 5/11/22	7/1/22
	Electrical		
	Mechanical	MV 2.17.22	
	Plumbing	EK 02-17-22	
	Roofing		
	Flood		
	Publics Works		81/54

APPLICATION INCLUDES	FEES $	.00
Zoning	100	00
Structural	100	00
Base Fee	$400	00
Scanning	187	00
Technology	540	00
Rework	100	00
Violation		
DBPR/DCA	135	00
Code Compliance	108	00
(-) Upfront Fee	125	00
Balance Due	6445	00

Total: 6,670.00

Revised 08/27/2021

CITY OF MIAMI SPRINGS

BUILDING AND CODE COMPLIANCE DEPARTMENT

201 Westward Drive
Miami Springs, FL 33166

Tel: 305-805-5030
Fax: 305-805-5036

INSTRUCTIONS TO OWNER-BUILDERS

Pursuant to Florida Statute 489.103 (7) owners of real property when acting as their own contractor and providing all material supervision themselves, when building or improving one-family residences or commercial property, shall be provided with the following disclosure statement by the local permitting agency.

State law requires construction to be done by licensed contractors. You have applied for a permit under an exemption to that law. The exemption allows you, as the owner of your property, to act as your own contractor with certain restrictions even though you do not have a license. You must provide direct, onsite supervision of the construction yourself. You may build or improve a commercial building, provided your costs do not exceed $25,000. ***The building or residence must be for your own use or occupancy. It may not be built or substantially improved for sale or lease. If you sell or lease a building you have built or substantially improved yourself within 1 year after the construction is complete, the law will presume that you built or substantially improved it for sale or lease, which is a violation of this exemption.*** *You may not hire an unlicensed person to act as your contractor or to supervise people working on your building. It is your responsibility to make sure that people employed by you have licenses required by state law and by county or municipal licensing ordinances. You may not delegate the responsibility for supervising work to a licensed contractor who is not licensed to perform the work that is being done. Any person working on your building who is not licensed must work under your direct supervision and must be employed by you, which means that you must deduct F.I.C.A. and withholding tax and provide workers' compensation for that employee, all as prescribed by law. Your construction must comply with all applicable laws, ordinances, building Codes, and zoning regulations.*

PROOF OF OWNERSHIP - Prior to a building permit being issued to you, you must submit proof of ownership of the land concerned in the application in the form of a recorded deed, showing you own the property, or a copy of mortgage or warranty deed of the land, or a Dade County tax receipt, statement to contain legal description of property and indicate property is in your name. Legal description and name on document of proof must correspond to the name and legal description on the application.

RESPONSIBILITY - You will be responsible for all work done by your day labor employees, and you must either employ licensed contractors or persons to be paid on an hourly or per diem basis. Anyone contracting (including labor) with you, verbally or in writing, on a fixed fee basis for any work, who is not properly licensed, will be subject to a fine of $500 pursuant to Florida Statute 489.127 (4) (c) and/or imprisonment for up to one year pursuant to Florida statute 489.127.

INSURANCE - You should be advised that if your labor employees cause any damage to persons or property, or if any of your day labor employees are injured on the job, YOU ARE LIABLE. Your regular home insurance policy ordinarily does not cover this type of liability.

WITHHOLDING TAXES - You should be advised to investigate your responsibility for withholding Social Security, Federal and State Unemployment Insurance Taxes from the wages of employees working for you on the proposed construction, and for making returns thereof to the proper agency.

DEMOLITION WORK - In addition to meeting Florida Building Code requirements stated above, you are responsible for disconnecting all utilities, including water, sewer, septic tank, electrical service, gas, telephone, cable TV, etc., prior to commencing demolition. You are also required to obtain a permit from the State of Florida Department of Health and Rehabilitative Services in order to abandon any septic tank that is on the property.

Notice: Separate permits are required for electrical, septic tank abandonment, plumbing, roofing and mechanical work.

I, Jovanny Jimenez the owner of the property described as 200 Esplanade Dr Miami Springs, FL 33166, do hereby certify that I have read the foregoing instructions, and am aware of my responsibilities and liabilities for a building permit for construction work on the above described property. **HAVING READ THE ABOVE STATE LAWS AND REQUIREMENTS, I UNDERSTAND AND AGREE THAT I WILL ABIDE BY SUCH LAWS AND REQUIREMENTS.**

Notary Signature _____ Property Owner _____ Date 12/10/21

The foregoing instrument was acknowledged before me this 10 day of December 21 by Jovanny Jimenez

( ) is personally known to me
( ) has produced FL DL as identification.

EMILY MURILLO
MY COMMISSION # HH 123670
EXPIRES: April 28, 2025
Bonded Thru Notary Public Underwriters

Notary Public Signature

Cash Register Receipt

City of Miami Springs

Receipt Number
194035

DESCRIPTION	ACCOUNT	QTY	PAID
PermitTRAK			**$6,445.00**
RES21-1143 Address: 200 ESPLANADE DRIVE APN: 05-3118-016-1590			**$6,445.00**
DCA AND DBPR AND CODE			$243.00
CODE COMPLIANCE	145-0000-217-40-00	0	$108.00
DBPR	145-0000-217.60-00	0	$81.00
DCA	145-0000-217-50-00	0	$54.00
MISCELLANEOUS FEES			$100.00
MISCELLANEOUS PERMIT FEE	145-0000-329.09-00	0	$100.00
RESIDENTIAL BUILDING PERMIT FEE			$5,275.00
BUILDING PERMIT FEE	145-0000-322.00-00	0	$5,275.00
SCANNING AND TECHNOLOGY			$727.00
SCANNING	145-0000-220.27-00	0	$187.00
TECHNOLOGY	145-0000-220.26-00	0	$540.00
STRUCTURAL REVIEW			$100.00
RESIDENTIAL REVIEW	145-0000-329.06-00	0	$100.00
TOTAL FEES PAID BY RECEIPT:194035			**$6,445.00**

Date Paid: Wednesday, May 18, 2022

Paid By: JOVANY JIMENEZ

Cashier: MBM

Pay Method: CHECK 1002

PERMIT ROUTING LOG SHEET

CITY OF MIAMI SPRINGS

MIAMI SPRINGS — At the Heart of it All!

Work Site Address: 200 Esplanade Dr.

Permit No.: 21-1143

Owner's Name: Ambar Preval

Date Received: 12/10/21

Contractor's Name: HTO

Contact Phone No.: (786 587-7391

Comments: Addition

Reviewer	Approved	Date	Disapproved	Date	Comments
☑ Zoning $	CH	12/16/21	CH REWORK	12/14/21	SURVEY REQUIRED. TABULAR SUMMARY IN COMPARATIVE FORMAT REQUIRED. SEE SAMPLE DATA SHEET ATTACHED.
☑ Mechanical $	[illegible]	2.17.22			
☑ Electrical $	OK	4/21/22	[illegible]	2/16/22	Missing Receptacle's to Comply with NEC 210.52 SEE MARKING
☑ Plumbing $	EA	02-12-22	EIA REWORK	12-19-21 2/14/22	① W/MACHINE WET-VENT NOT TO CODE ② SHOW WATER HEATER DETAIL + LOCATION ON PLAN ③ SEE P-1 REDMARKS ON PLAN ③ PLEASE DONT REMOVE REVIEW PAGE.
☐ Public Works $			REWORK	5/11/22 05/05/22 6/10/22	
☑ Structural $	OK		[illegible] REWORK	2/22/22 04-12-2022	Provide str. Calculation for complete review & see BAM
☑ Building ☐ Roofing $	[illegible]	5/12/22	[illegible] REWORK	1/6/22 7/14/22 3/17/22	Provide Job cost. Further compliance w/flood may be required. Further comments may follow. SEE OTHER SIDE →

Building Specialist (Comments): Jovani Took set of plans on 01-31-2022

3/22/22: Ambar took BOTH sets

04/26/22 - Jovany Jimenez took both sets of plans.

CITY OF MIAMI SPRINGS
BUILDING DEPARTMENT

MAR 09 2022

RECEIVED

Jovany Jimenez
Florida
U.S.A

ESTIMATE

 # EST-420212

Bill To
Jovany Jimenez

Estimate Date : 07 Mar 2022

#	Item & Description	Qty	Rate	Amount
1	New Roof	1.00	35,000.00	35,000.00
2	New Addition to house	1.00	5,000.00	5,000.00
3	Bathroom Three Remodel	1.00	10,000.00	10,000.00
4	Flooring & Tiles	1.00	14,000.00	14,000.00
5	Raise Floor	1.00	5,000.00	5,000.00
6	Outdoor terrace - Columns and finishes	1.00	3,000.00	3,000.00
7	Wall, and ceiling	1.00	10,000.00	10,000.00
8	interior and exterior Painting	1.00	5,000.00	5,000.00
9	~~Plumbing~~	1.00	8,000.00	8,000.00
10	~~Electric - Replace everything~~	1.00	8,000.00	8,000.00
11	~~Install windows and Doors~~	1.00	8,000.00	8,000.00
12	Dispose of Trash	1.00	700.00	700.00
			Sub Total	111,700.00
			Total	**$111,700.00**

Notes

Looking forward to your business.

POWERED BY ZOHO

CITY OF MIAMI SPRINGS
201 Westward Drive,
Miami Springs, FL 33166

AFFIDAVIT OF COMPLIANCE

I _____, the owner of **200 N ESPLANADE DR** understand that I may not receive a final inspection on any new permits until all the expired permits or cases below are addressed in full.

Permit/Code Compliance Case No.	Description
BP03-01016	EXPIRED PERMIT: WINDOWS & DOORS HOMEOWNER
BP04-00606	EXPIRED PERMIT: SLABS HOMEOWNER

I as the owner understand that the listed permits and code compliance cases above are open and might delay me from receiving any final inspections on any new permit applications under my address. I will be addressing the permit(s) and/or code compliance case(s) within the six months of any newly issued permit.

OWNER

PRINT NAME: _____

SIGNATURE: _____

STATE OF FLORIDA)
COUNTY OF MIAMI-DADE)
SWORN TO AND SUBSCRIBED BEFORE ME
THIS _____ DAY OF _____, 20_____
BY _____

NOTARY SIGNATURE _____

SEAL:

Guillermo Ramon Gonzalez RA.

9000 SW.168th Avenue.
Miami, Florida 33186
Telephone: (305) 484-8171

REWORK

Miami Springs Building Department
201 Westward Drive
Miami Springs, Florida 33166

April 29, 2022

Owner: Ambar Preval
Project Address: 200 N. Esplanade Drive Miami Springs, Florida 33166
Application Number: 21-1143

Response Sheet To Building Dept. Comments

1. **Structural:** Mr. Rodriquez, Please see Attached structural calculations. The Idea for these calculations is to calculate the new walls, footings and beams and to make sure that existing walls are reinforced properly when adding the 2' height over existing concrete beams as shown on the plans and section B on A-5.
2. Please see special inspector form that has been attached to each set of plans.
3. Please see certification letter now attached to both sets of plans.
4. The reinforced masonry calculations are in calculations. Also please see sheet A-2 for new tie down reinforcement at existing front walls.
5. The roof diagram with zones is on revised sheet A-6. Also for your comment#9 is the revised note for terrace plywood ceiling.
6. Please see beam detail on bottom left of sheet A-5, where it shows compliance with ACI 318-14.
7. Please see the soil statement notes #1 & #2 on top of sheet A-2. The wording is arranged differently but it says the same as in your comment #7.
8. Please see the roof strap NOAs have been submitted and are attached to each set of plans. Also on top center of sheet A-5 is a gravity & uplift legend with specs.
9. See revised terrace section-B on sheet A-6 for ceiling plywood backing.
10. Please see new full wall section-A on A-2 & Section B on sheet A-6. & SECT.-B ON A-5
11. See this response sheet.
12. **Building:** revised sheet D-1 to show all areas affected by raising the floor slab. Also revised scope of work note. There is no overhead electrical line. It is underground service to nearby pole (sw.) by adjacent alley area, see site plan. See flood criteria notes on SP-1/D-1 & A-2. See window schedule on sheet A-4 for SHGC. Window & door NOAS under separate permit. Shower enclosure type & specs (note) is on sheet A-1 on floor plan next to new bath for master bedroom. Shower detail is on sheet P-1. See precast lintel noas attached.

NOTE: SEE REINFORCED MASONRY AT REAR OF STRUCTURAL CALCS.

Respectfully,

RA.# 13960
License Number

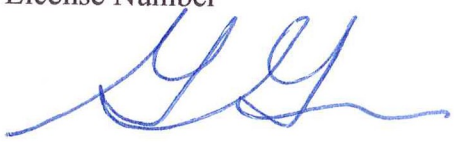

Signature, Date
Guillermo Ramon Gonzalez

Guillermo Ramon Gonzalez RA

9000 SW. 168th Ave. Miami, Florida 33196
Telephone: (305) 484-8171

REWORK

Miami Springs Building Department
201 Westward Drive
Miami Springs, Florida 33166

April 29, 2022

Owner: Ambar Preval
Project Address: 200 N. Esplanade Drive Miami Springs, Florida 33166
Application Number: 21-1143

Architect's Certification

I, Guillermo Ramon Gonzalez, certify that These new alterations and structural modifications will not affect the structural integrity of the existing building and it's structural members as per 2020-7th Edition (Existing buildings 907).

Thus I hereby certify that all work including the items mentioned above will be functional and in accordance with the approved plans and "F.B.C." 2020 -7th Edition.

Respectfully.

RA.# 13960
License Number

Signature, Seal and Date
Guillermo Ramon Gonzalez

OFFICE COPY
CITY OF MIAMI SPRINGS

MIAMI-DADE COUNTY
PRODUCT CONTROL SECTION
11805 SW 26 Street, Room 208
Miami, Florida 33175-2474
T (786) 315-2590 F (786) 315-2599
www.miamidade.gov/economy

CITY OF MIAMI SPRINGS
BUILDING DEPARTMENT
DEC 10 2021
RECEIVED

DEPARTMENT OF REGULATORY AND ECONOMIC RESOURCES (RER)
BOARD AND CODE ADMINISTRATION DIVISION

NOTICE OF ACCEPTANCE (NOA)

Nu-Vue Industries, Inc.
1055 East 29th Street
Hialeah, FL 33013

SCOPE: This NOA is being issued under the applicable rules and regulations governing the use of construction materials. The documentation submitted has been reviewed and accepted by Miami-Dade County RER-Product Control Section to be used in Miami Dade County and other areas where allowed by the Authority Having Jurisdiction (AHJ).

This NOA shall not be valid after the expiration date stated below. The Miami-Dade County Product Control Section (In Miami Dade County) and/or the AHJ (in areas other than Miami Dade County) reserve the right to have this product or material tested for quality assurance purposes. If this product or material fails to perform in the accepted manner, the manufacturer will incur the expense of such testing and the AHJ may immediately revoke, modify, or suspend the use of such product or material within their jurisdiction. RER reserves the right to revoke this acceptance if it is determined by Miami-Dade County Product Control Section that this product or material fails to meet the requirements of the applicable building code.

This product is approved as described herein and has been designed to comply with the Florida Building Code, including the High Velocity Hurricane Zone.

DESCRIPTION: Series AB, NVSTA, NVHTA, NVTHJ, IKE, NVTT and NVHC-37 Steel Wood Connectors

APPROVAL DOCUMENT: Drawing No. **NU-1**, titled "Truss and Top Plate Anchors", sheets 1 through 4 of 4, dated 08/18/2020, prepared by Nu-Vue Industries, Inc., signed and sealed by Vipin N. Tolat, P.E., bearing the Miami-Dade County Product Control revision stamp with the Notice of Acceptance number and expiration date by the Miami-Dade County Product Control Section.

MISSILE IMPACT RATING: None

LABELING: Each unit shall bear a permanent label with the manufacturer's name or logo, city, state, model/series, and following statement: "Miami-Dade County Product Control Approved", unless otherwise noted herein.

RENEWAL of this NOA shall be considered after a renewal application has been filed and there has been no change in the applicable building code negatively affecting the performance of this product.

TERMINATION of this NOA will occur after the expiration date or if there has been a revision or change in the materials, use, and/or manufacture of the product or process. Misuse of this NOA as an endorsement of any product, for sales, advertising or any other purposes shall automatically terminate this NOA. Failure to comply with any section of this NOA shall be cause for termination and removal of NOA.

ADVERTISEMENT: The NOA number preceded by the words Miami-Dade County, Florida, and followed by the expiration date may be displayed in advertising literature. If any portion of the NOA is displayed, then it shall be done in its entirety.

INSPECTION: A copy of this entire NOA shall be provided to the user by the manufacturer or its distributors and shall be available for inspection at the job site at the request of the Building Official.

This NOA **revises NOA # 18-0312.06** and consists of this page 1 and evidence pages E-1, E-2, E-3 and E-4, as well as approval document mentioned above.

The submitted documentation was reviewed by **Carlos M. Utrera, P.E.**

MIAMI-DADE COUNTY APPROVED

NOA No. 20-0901.05
Expiration Date: May 22, 2023
Approval Date: November 5, 2020
Page 1

NOTICE OF ACCEPTANCE: EVIDENCE SUBMITTED

4. New Evidence Submitted

A. DRAWINGS

1. Drawing No. **NU-1**, titled "Truss and Top Plate Anchors", sheets 1 through 4 of 4, dated 08/18/2020, prepared by Nu-Vue Industries, Inc., signed and sealed by Vipin N. Tolat, P.E.

B. TESTS

1. None.

C. CALCULATIONS

1. None.

D. QUALITY ASSURANCE

1. Miami-Dade Department of Regulatory and Economic Resources (RER)

E. MATERIAL CERTIFICATIONS

1. None.

F. STATEMENTS

1. Statement letter of code conformance to the 6th Edition (2017) and 7th Edition (2020) FBC and of no financial interest, dated 08/18/2020, signed and sealed by Vipin N. Tolat, P.E.

Carlos M. Utrera, P.E.
Product Control Examiner
NOA No. 20-0901.05
Expiration Date: May 22, 2023
Approval Date: November 5, 2020

OFFICE COPY
CITY OF MIAMI SPRINGS

MIAMI-DADE COUNTY
PRODUCT CONTROL SECTION
11805 SW 26 Street, Room 208
Miami, Florida 33175-2474
T (786) 315-2590 F (786) 315-2599
www.miamidade.gov/economy

DEPARTMENT OF REGULATORY AND ECONOMIC RESOURCES (RER)
BOARD AND CODE ADMINISTRATION DIVISION

NOTICE OF ACCEPTANCE (NOA)

CITY OF MIAMI SPRINGS
BUILDING DEPARTMENT
DEC 10 2021
RECEIVED

Rheem Sales Company, Inc.
5600 Old Greenwood Rd.
Fort Smith, AR 72917

SCOPE:

This NOA is being issued under the applicable rules and regulations governing the use of construction materials. The documentation submitted has been reviewed and accepted by Miami-Dade County RER-Product Control Section to be used in Miami-Dade County and other areas where allowed by the Authority Having Jurisdiction (AHJ).

This NOA shall not be valid after the expiration date stated below. The Miami-Dade County Product Control Section (In Miami-Dade County) and/ or the AHJ (in areas other than Miami-Dade County) reserve the right to have this product or material tested for quality assurance purposes. If this product or material fails to perform in the accepted manner, the manufacturer will incur the expense of such testing and the AHJ may immediately revoke, modify, or suspend the use of such product or material within their jurisdiction. RER reserves the right to revoke this acceptance if it is determined by Miami-Dade County Product Control Section that this product or material fails to meet the requirements of the applicable building code.

This product is approved as described herein and has been designed to comply with the Florida Building Code, including the High Velocity Hurricane Zone.

DESCRIPTION: Mechanical Unit Steel and Aluminum Tie-Down Clips for Grade and Rooftop Applications

APPROVAL DOCUMENT: Drawing No. **20-28800**, titled "Wind Load Certification of Mechanical Unit Cabinetry and Steel/ Aluminum Tie-Down Clips: At Grade and Roof Mounted Applications", sheets 1 through 7 of 7, dated 05/14/2015, revised on 10/19/2020, prepared by Engineering Express, signed and sealed by Frank L. Bennardo, P.E., bearing the Miami-Dade County Product Control revision stamp with the Notice of Acceptance number and expiration date by the Miami-Dade County Product Control Section.

MISSILE IMPACT RATING: None

LABELING: Each unit shall bear a permanent label with the manufacturer's name or logo, city, state, model/ series, and following statement: "Miami-Dade County Product Control Approved", unless otherwise noted herein.

RENEWAL of this NOA shall be considered after a renewal application has been filed and there has been no change in the applicable building code negatively affecting the performance of this product.

TERMINATION of this NOA will occur after the expiration date or if there has been a revision or change in the materials, use, and/ or manufacture of the product or process. Misuse of this NOA as an endorsement of any product, for sales, advertising or any other purposes shall automatically terminate this NOA. Failure to comply with any section of this NOA shall be cause for termination and removal of NOA.

ADVERTISEMENT: The NOA number preceded by the words Miami-Dade County, Florida, and followed by the expiration date may be displayed in advertising literature. If any portion of the NOA is displayed, then it shall be done in its entirety.

INSPECTION: A copy of this entire NOA shall be provided to the user by the manufacturer or its distributors and shall be available for inspection at the job site at the request of the Building Official.

This NOA **renews and revises NOA # 18-0719.07** and consists of this page 1 and evidence pages E-1, E-2, E-3 and E-4, as well as approval document mentioned above.

The submitted documentation was reviewed by **Carlos M. Utrera, P.E.**

MIAMI-DADE COUNTY APPROVED

NOA No. 20-1102.09
Expiration Date: February 25, 2026
Approval Date: March 4, 2021
Page 1

Rheem Sales Company, Inc.

NOTICE OF ACCEPTANCE: EVIDENCE SUBMITTED

1. Evidence submitted under previous NOAs

A. DRAWINGS *"Submitted under NOA # 15-0903.08"*

1. Drawing No. **15-2543GA** and **15-2564RE**, titled "Wind Load Certification of Mechanical Unit Cabinetry and Steel/Aluminum Tie-Down Clips: At Grade and Roof Mounted Applications", sheets 1 through 7 of 7, dated 05/14/2015, revised on 11/20/2015, prepared by Engineering Express, signed and sealed by Frank L. Bennardo, P.E.

B. TESTS *"Submitted under NOA # 15-0903.08"*

1. Test report on Uniform Static Air Pressure Test per FBC, TAS 202-94 along with marked-up drawings and installation diagram of Rheem RA Series Mechanical Units, prepared by American Test Lab of South Florida, Test Report No. **0323.01-15**, dated 05/18/2015, signed and sealed by Stephen W. Warter, P.E.

C. CALCULATIONS *"Submitted under NOA # 15-0903.08"*

1. Anchorage calculations prepared by Engineering Express, dated 11/20/2015, signed and sealed by Frank L. Bennardo, P.E.

D. QUALITY ASSURANCE

1. Miami-Dade Department of Regulatory and Economic Resources (RER)

E. MATERIAL CERTIFICATIONS

1. None.

F. STATEMENT *"Submitted under NOA # 15-0903.08"*

1. Statement letter of code conformance to the 5th edition (2014) FBC issued by Engineering Express, dated 08/24/2015, signed and sealed by Frank L. Bennardo, P.E.

2. Statement letter of no financial interest issued by Engineering Express, dated 11/20/2015, signed and sealed by Frank L. Bennardo, P.E.

3. Distributor agreement dated 11/12/2015.

Carlos M. Utrera, P.E.
Product Control Examiner
NOA No. 20-1102.09
Expiration Date: February 25, 2026
Approval Date: March 4, 2021

NOTICE OF ACCEPTANCE: EVIDENCE SUBMITTED

2. Evidence submitted under NOA # 18-0321.11

A. DRAWINGS

1. Drawing No. **15-2543GA** and **15-2564RE**, titled "Wind Load Certification of Mechanical Unit Cabinetry and Steel/Aluminum Tie-Down Clips: At Grade and Roof Mounted Applications", sheets 1 through 7 of 7, dated 05/14/2015, revised on 01/12/2018, prepared by Engineering Express, signed and sealed by Frank L. Bennardo, P.E.

B. TESTS

1. None.

C. CALCULATIONS

1. None.

D. QUALITY ASSURANCE

1. Miami-Dade Department of Regulatory and Economic Resources (RER)

E. MATERIAL CERTIFICATIONS

1. None.

F. STATEMENTS

1. Statement letter of code conformance to the 6th Edition (2017) FBC issued by Engineering Express, dated 03/19/2018, signed and sealed by Frank L. Bennardo, P.E.

Carlos M. Utrera, P.E.
Product Control Examiner
NOA No. 20-1102.09
Expiration Date: February 25, 2026
Approval Date: March 4, 2021

NOTICE OF ACCEPTANCE: EVIDENCE SUBMITTED

3. Evidence submitted under NOA # 18-0719.07

A. DRAWINGS

1. Drawing No. Drawing No. **15-2543GA** through **15-2543GD** and **15-2564RE**, titled "Wind Load Certification of Mechanical Unit Cabinetry and Steel/ Aluminum Tie-Down Clips: At Grade and Roof Mounted Applications", sheets 1 through 7 of 7, dated 05/14/2015, revised on 01/12/2018, prepared by Engineering Express, signed and sealed by Frank L. Bennardo, P.E. on 07/17/2018.

B. TESTS

1. None.

C. CALCULATIONS

1. None.

D. QUALITY ASSURANCE

1. Miami-Dade Department of Regulatory and Economic Resources (RER)

E. MATERIAL CERTIFICATIONS

1. None.

F. STATEMENTS

2. Models removal request, dated 07/17/2018, signed and sealed by Frank L. Bennardo, P.E.

Carlos M. Utrera, P.E.
Product Control Examiner
NOA No. 20-1102.09
Expiration Date: February 25, 2026
Approval Date: March 4, 2021

NOTICE OF ACCEPTANCE: EVIDENCE SUBMITTED

4. New evidence submitted

A. DRAWINGS

1. Drawing No. **20-28800**, titled "Wind Load Certification of Mechanical Unit Cabinetry and Steel/ Aluminum Tie-Down Clips: At Grade and Roof Mounted Applications", sheets 1 through 7 of 7, dated 05/14/2015, revised on 10/19/2020, prepared by Engineering Express, signed and sealed by Frank L. Bennardo, P.E.

B. TESTS

1. None.

C. CALCULATIONS

1. None.

D. QUALITY ASSURANCE

1. Miami-Dade Department of Regulatory and Economic Resources (RER)

E. MATERIAL CERTIFICATIONS

1. None.

F. STATEMENTS

1. Statement letter of code conformance to the 7th edition (2020) FBC issued by Engineering Express, dated 10/19/2020, signed and sealed by Frank L. Bennardo, P.E.
2. Statement letter of no financial interest issued by Engineering Express, dated 10/19/2020, signed and sealed by Frank L. Bennardo, P.E.

Carlos M. Utrera, P.E.
Product Control Examiner
NOA No. 20-1102.09
Expiration Date: February 25, 2026
Approval Date: March 4, 2021

MIAMI SPRINGS
At the Heart of It All!

CITY OF MIAMI SPRINGS
BUILDING DEPARTMENT
201 Westward Drive, Second Floor
Miami Springs, FL 33166
Office: 305-805-5030 Fax: 305-805-5036
www.miamisprings-fl.gov

NOTICE TO CITY OF MIAMI SPRINGS BUILDING DEPARTMENT OF EMPLOYMENT AS SPECIAL INSPECTOR UNDER THE FLORIDA BUILDING CODE.

I (We) have been retained by 2020-7th Edition JAMBAR PREVAL to perform special inspector services under the **Florida Building Code ~~2017~~** at the ADDITION & REMODELING to RES project on the below listed structure as of Dec 20 - 2021 (date). I am a registered Architect/Professional Engineer licensed in the State of Florida.

Permit Number: PENDING

OFFICE COPY
CITY OF MIAMI SPRINGS

CITY OF MIAMI SPRINGS
BUILDING DEPARTMENT
DEC 10 2021
RECEIVED

- ☐ Special Inspector for Piling, **FBC 1822.1.20 (R4404.6.1.20)**
- ☒ Special Inspector for Trusses > 35 ft. long or 6 ft. high, **FBC 2319.17.2.4.2 (R4409.6.17.2.4.2)**
- ☒ Special Inspector for Reinforced Masonry, **FBC 2122.4 (R4407.5.4)**
- ☐ Special Inspector for Steel Framing, **FBC 2218.2 (R4408.5.2)**
- ☒ Special Inspector for Soil Compaction, **FBC 1820.3.1 (R4404.4.3.1)**
- ☐ Special Inspector for Precast Attachments, **FBC 1927.12.2 (R4405.9.12)**
- ☐ Special Inspector for Roofing Applications, Lt. Weight. Insul.Conc. **FBC 1917.2 (R4405.12.2)**
- ☐ Other _____

Note: Only the marked boxes apply.
The following individual(s) employed by this firm or myself are authorized representative to perform inspection*

1. Guillermo R. Gonzalez 2. _____
3. _____ 4. _____

***Special inspectors utilizing authorized representatives shall insure the authorized representative is qualified by education or licensure to perform the duties assign by Special Inspector. The qualifications shall include licensure as a professional engineer or architect: graduation from an engineering education program in civil or structural engineering; graduation from an architectural education program; successful completion of the NCEES Fundamentals Examination; or registration as building inspector or general contractor.**

I (we) will notify the City of Miami Springs Building Department of any changes regarding authorized personnel performing inspection services.

I (we) understand that a Special Inspector inspection log for each building must be displayed in a convenient location on the site for reference by the City of Miami Springs Building Department Inspector. All mandatory inspections, as required by the Florida Building Code, must be performed by the City of Miami Springs Building Department. Inspections performed by the Special Inspector hired by the owner are in addition to the mandatory inspections performed by the department. Further, upon completion of work under each Building Permit, I will submit to the Building Inspector at the time of the final inspection the completed inspection log form and a sealed statement indicating that, to the best of my knowledge, belief and professional judgment those portions of the project outlined above meet the intent of the Florida Building Code and are in substantial accordance with the approval plans.

Engineer/Architect	Engineer/Architect
[signature]	Guillermo R. Gonzalez RA 13960
Signed and Sealed	Print Name

Date: 12/8/21 Address: 13400 SW 134 AVE Miami FL 33186

Guillermo Ramon Gonzalez RA.

9000 SW.168th Avenue.
Miami, Florida 33186
Telephone: (305) 484-8171

Miami Springs Building Department
201 Westward Drive
Miami Springs, Florida 33166

March 22, 2022

Owner: Ambar Preval
Project Address: 200 N. Esplanade Drive Miami Springs, Florida 33166
Application Number: 21-1143

Response Sheet To Building Dept. Comments

1. **Structural:** Dear Sir, Please see Attached structural calculations.
2. **Building:** revised sheet D-1 to show all areas affected by raising the floor slab. Also revised scope of work note. There is no overhead electrical line. It is underground service to nearby pole or transf. (sw.) by adjacent alley area, see site plan for electric meter location.
   See flood criteria notes on SP-1/D-1 & A-2. See window schedule on sheet A-4 for SHGC. Window & door NOAS under separate permit, they will be submitted at a later date not part of this permit. Shower enclosure type & specs (note) is on sheet A-1 on floor plan next to new bath for master bedroom. Shower detail is on sheet P-1. See precast lintel noas attached. See detail-E on A-4 for new windows/doors to existing tie beam connection. Also see detail-C on A-6 for new front concrete steps. See flood criteria Note on SP-1 & A-2.
3. **Electrical:** See revised sheet E-1 for additional outlets as per comments.

Respectfully,

RA.# 13960
License Number

4-7-22
Signature, Date
Guillermo Ramon Gonzalez

Description

Final Loads & Moments

Wall Weight moment @ Mid Ht	290.00 lbs	Wind Moment @ Mid Ht	9,241.50 in-#
		Seismic Moment @ Mid Ht	0.00 in-#
Dead Load Moment @ Top of Wall	0.00 in-#		
Dead Load Moment @ Mid Ht	0.00 in-#	Total Dead Load	0.00 lbs
		Total Live Load	0.00 lbs
Live Load Moment @ Top of Wall	0.00 in-#		
LiveLoad Moment @ Mid Ht	0.00 in-#		

Maximum Allow Moment for Applied Axial Load = 9,636.44 in-#
Maximum Allow Axial Load for Applied Moment = 19,430.63 lbs

MIAMI-DADE COUNTY
DEPARTMENT OF REGULATORY AND ECONOMIC RESOURCES (RER)
BOARD AND CODE ADMINISTRATION DIVISION

MIAMI-DADE COUNTY
PRODUCT CONTROL SECTION
11805 SW 26 Street, Room 208
Miami, Florida 33175-2474
T (786) 315-2590 F (786) 315-2599
www.miamidade.gov/economy

NOTICE OF ACCEPTANCE (NOA)

Cast-Crete USA, LLC
6324 County Road 579
Seffner, Florida 33584

SCOPE:
This NOA is being issued under the applicable rules and regulations governing the use of construction materials. The documentation submitted has been reviewed and accepted by Miami-Dade County RER- Product Control Section to be used in Miami Dade County and other areas where allowed by the Authority Having Jurisdiction (AHJ).

This NOA shall not be valid after the expiration date stated below. The Miami-Dade County Product Control Section (In Miami Dade County) and/or the AHJ (in areas other than Miami Dade County) reserve the right to have this product or material tested for quality assurance purposes. If this product or material fails to perform in the accepted manner, the manufacturer will incur the expense of such testing and the AHJ may immediately revoke, modify, or suspend the use of such product or material within their jurisdiction. RER reserves the right to revoke this acceptance, if it is determined by Miami-Dade County Product Control Section that this product or material fails to meet the requirements of the applicable building code.

This product is approved as described herein, and has been designed to comply with the High Velocity Hurricane Zone of the Florida Building Code.

DESCRIPTION: "Cast-Crete" 8 inch High Strength Precast and Pre-stressed Concrete Lintels

APPROVAL DOCUMENT: Drawing No. FD8, titled "Cast-Crete 8" Lintel Fabrication Details", sheets 1 through 3 of 3, prepared by Craig Parrino, P.E., dated June 7, 1996, last revision dated June 12, 2014, signed and sealed by Craig Parrino, P.E., on January 22, 2019, bearing the Miami-Dade County Product Control Revision stamp with the Notice of Acceptance number and the expiration date by the Miami-Dade County Product Control Section.

MISSILE IMPACT RATING: Large and Small Missile Impact Resistant

LABELING: Each lintel shall bear a permanent label with the manufacturer's name or logo and the Miami-Dade County logo.

RENEWAL of this NOA shall be considered after a renewal application has been filed and there has been no change in the applicable building code negatively affecting the performance of this product.

TERMINATION of this NOA will occur after the expiration date or if there has been a revision or change in the materials, use, and/or manufacture of the product or process. Misuse of this NOA as an endorsement of any product, for sales, advertising or any other purposes shall automatically terminate this NOA. Failure to comply with any section of this NOA shall be cause for termination and removal of NOA.

ADVERTISEMENT: The NOA number preceded by the words Miami-Dade County, Florida, and followed by the expiration date may be displayed in advertising literature. If any portion of the NOA is displayed, then it shall be done in its entirety.

INSPECTION: A copy of this entire NOA shall be provided to the user by the manufacturer or its distributors and shall be available for inspection at the job site at the request of the Building Official.

This NOA **revises NOA # 19-0130.13** and consists of this page 1, evidence submitted pages E-1, E-2, E-3, E-4, E-5, E-6 & E-7 as well as approval document mentioned above.
The submitted documentation was reviewed by **Helmy A. Makar, P.E., M.S.**

MIAMI-DADE COUNTY APPROVED

Helmy A. Makar
08/20/2020

NOA No. 20-0630.16
Expiration Date: 05/21/2022
Approval Date: 08/20/2020
Page 1

Cast-Crete USA, LLC

NOTICE OF ACCEPTANCE: EVIDENCE SUBMITTED

1. EVIDENCE SUBMITTED UNDER PREVIOUS APPROVAL #96-0613.01

A. DRAWINGS

1. *Drawing No. FD8, titled "Cast-Crete 8" Lintel Fabrication Details", prepared by Craig Parrino, P.E., dated 06/07/96, revision #1 dated 11/08/96, sheet 1 of 1, and Drawing No. LT8, titled "Cast-Crete 8" Lintel Safe Load Tables", prepared by Craig Parrino, P.E., dated 06/07/97, revision #4 dated 04/28/98, sheet 1 of 1, both drawings signed and sealed by Craig Parrino, P.E.*

B. TESTS

1. *Test report on flexural testing on Precast and Pre-stressed Concrete Lintels Filled Models, total of (36) concrete lintel specimens, per ASTM E-529-94, prepared by Applied Research Laboratories, Report No. 29702B, dated 07/30/97, signed and sealed by Christopher A. Hamon, P.E.*

C. CALCULATIONS

1. *Calculations for Cast-Crete 8-inch Lintels, dated 06/06/96, 349 pages, prepared by Craig Parrino, P.E., signed and sealed by Craig Parrino, P.E.*
2. *Calculations for Cast-Crete 8-inch Lintels, dated 11/11/96, 45 pages, prepared by Craig Parrino, P.E., signed and sealed by Craig Parrino, P.E.*

D. MATERIAL CERTIFICATIONS

1. *Mill Certified Inspection Report Silo #4 dated April 1996 for cement by Southdown Brooksville Cement Laboratory.*
2. *Mill Certified Inspection Report #20-8275 dated 06/20/95 for pre-stressing strand by The Crispin Company.*
3. *Mill Certified Inspection Report #20-8345 dated 11/13/95 for pre-stressing strand by The Crispin Company.*
4. *Mill Certified Inspection Report #2111-078240 dated 04/25/96 for #3 rebar by Ameristeel.*
5. *Mill Certified Inspection Report #84-M19614 dated 02/29/96 for #5 rebar by Birmingham Steel Corp.*
6. *Mill Certified Inspection Report #58-A66332 dated 01/28/96 for #4 rebar by Birmingham Steel Corp.*
7. *Mill Certified Inspection Report #84-M20749 dated 04/05/96 for #5 rebar by Birmingham Steel Corp.*
8. *Mill Certified Inspection Report #84-M19805 dated 03/06/96 for #4 rebar by Birmingham Steel Corp.*
9. *Mill Certified Inspection Report #84-M21208 dated 04/21/96 for #4 rebar by Birmingham Steel Corp.*
10. *Mill Certified Inspection Report #84-M20652 dated 04/03/96 for #5 rebar by Birmingham Steel Corp.*

Helmy A. Makar, P.E., M.S.
Product Control Section Supervisor
NOA No. 20-0630.16
Expiration Date: 05/21/2022
Approval Date: 08/20/2020

11. *Mill Certified Inspection Report #84-M20749 dated 04/05/96 for #5 rebar by Birmingham Steel Corp.*
12. *Quality Control Manual for Cast-Crete Machine Made Precast Lintels dated 05/14/96.*
13. *Quality Control Manual for Pre-stressed Products dated 03/20/95.*

2. EVIDENCE SUBMITTED UNDER PREVIOUS APPROVAL #01-0209.03

A. DRAWINGS

1. *None.*

B. TESTS

1. *None.*

C. CALCULATIONS

1. *None.*

D. MATERIAL CERTIFICATIONS

1. *None.*

3. EVIDENCE SUBMITTED UNDER PREVIOUS APPROVAL # 03-0605.05

A. DRAWINGS:

1. *Drawing No. FD8, titled "Cast-Crete 8" Lintel Fabrication Details", sheet 1 of 1, prepared by Craig Parrino, P.E., dated June 7, 1996, revision #2 dated January 28, 2003, and Drawing No. LT8, titled "Cast-Crete 8" Lintel Safe Load Tables", sheets 1 & 2 of 2, prepared by Craig Parrino, P.E., dated June 7, 1996, revision #5 dated March 24, 2003, all drawings are signed and sealed by Craig Parrino, P.E.*

B. TESTS:

1. *Test report on flexural testing on Precast Concrete Lintels Filled Models, total of (12) concrete lintel specimens, per ASTM E-529-94, prepared by Applied Research Laboratories, Report No. 30404B, dated 04/23/03, signed and sealed by Christopher A. Hamon, P.E.*

C. CALCULATIONS:

1. *Calculations for Cast-Crete High Strength Precast and Pre-stressed 8-inch Lintels, dated May 29, 2003, sheets 1.1 through 1.493 and 2.1 through 2.336, prepared by Craig Parrino, P.E., signed and sealed by Craig Parrino, P.E.*

D. MATERIAL CERTIFICATION:

1. *Quality System Manual for Cast-Crete Machine Made Precast Lintels revised on May 01, 2002.*
2. *Cast-Crete Quality System Manual for Pre-stressed Products dated 2002.*

Helmy A. Makar, P.E., M.S.
Product Control Section Supervisor
NOA No. 20-0630.16
Expiration Date: 05/21/2022
Approval Date: 08/20/2020

NOTICE OF ACCEPTANCE: EVIDENCE SUBMITTED

4. EVIDENCE SUBMITTED UNDER PREVIOUS APPROVAL #06-0222.01

A. DRAWINGS

1. Drawing No. FD8, titled "Cast-Crete 8" Lintel Fabrication Details", sheets 1 through 3 of 3, prepared by Craig Parrino, P.E., dated June 7, 1996, last revision dated February 17, 2006, signed and sealed by Craig Parrino, P.E.

B. TESTS

1. None.

C. CALCULATIONS

1. None.

D. QUALITY ASSURANCE

1. By Miami-Dade Building Code Compliance Office.

E. MATERIAL CERTIFICATION

1. None.

F. OTHER

1. Letter from Cast-Crete Corporation, dated 02/20/2006, signed by Craig Parrino, P.E.

5. EVIDENCE SUBMITTED UNDER PREVIOUS APPROVAL # 11-0121.04

A. DRAWINGS

1. None.

B. TESTS

1. None.

C. CALCULATIONS

1. None.

D. QUALITY ASSURANCE

1. By Miami-Dade Building and Neighborhood Compliance Department (BNC).

E. MATERIAL CERTIFICATION

1. None.

F. OTHER

1. Letter from Cast-Crete Corporation, dated January 18, 2011, signed by Craig Parrino, P.E., certifying compliance with the Florida Building Code, 2007 Edition.

Helmy A. Makar, P.E., M.S.
Product Control Section Supervisor
NOA No. 20-0630.16
Expiration Date: 05/21/2022
Approval Date: 08/20/2020

NOTICE OF ACCEPTANCE: EVIDENCE SUBMITTED

6. EVIDENCE SUBMITTED UNDER PREVIOUS APPROVAL #12-0209.13

A. DRAWINGS

1. *Drawing No. FD8, titled "Cast-Crete 8" Lintel Fabrication Details", sheets 1 through 3 of 3, prepared by Craig Parrino, P.E., dated June 7, 1996, last revision dated February 17, 2006, signed and sealed by Craig Parrino, P.E., on March 22, 2012.*

B. TESTS

1. *None.*

C. CALCULATIONS

1. *None.*

D. QUALITY ASSURANCE

1. *By Miami-Dade County Department of Permitting, Environment, and Regulatory Affairs.*

E. MATERIAL CERTIFICATION

1. *None.*

F. OTHER

1. *Letter from Cast-Crete Corporation, dated 02/03/2012, signed and sealed by Craig Parrino, P.E., certifying compliance with the Florida Building Code, 2010 Edition.*

7. EVIDENCE SUBMITTED UNDER PREVIOUS APPROVAL #14-0903.02

A. DRAWINGS

1. *Drawing No. FD8, titled "Cast-Crete 8" Lintel Fabrication Details", sheets 1 through 3 of 3, prepared by Craig Parrino, P.E., dated June 7, 1996, last revision dated June 12, 2014, signed and sealed by Craig Parrino, P.E., on August 19, 2014.*

B. TESTS

1. *None.*

C. CALCULATIONS

1. *Calculations for High Strength Precast and Pre-stressed 8-inch Lintels, dated August 19, 2014, sheets 14.101 through 14.124, prepared, signed, sealed by Craig Parrino, P.E.*

D. QUALITY ASSURANCE

1. *By Miami-Dade County Department of Regulatory and Economic Resources (RER).*

E. MATERIAL CERTIFICATION

1. *None.*

F. OTHER

1. *Letter from Cast-Crete USA, Inc., dated August 19, 2014, signed and sealed by Craig Parrino, P.E., certifying compliance with the Florida Building Code, 2014 Edition.*

Helmy A. Makar, P.E., M.S.
Product Control Section Supervisor
NOA No. 20-0630.16
Expiration Date: 05/21/2022
Approval Date: 08/20/2020

NOTICE OF ACCEPTANCE: EVIDENCE SUBMITTED

8. EVIDENCE SUBMITTED UNDER PREVIOUS APPROVAL #16-0126.03

A. DRAWINGS

1. None.

B. TESTS

1. None.

C. CALCULATIONS

1. None.

D. QUALITY ASSURANCE

1. By Miami-Dade County Department of Regulatory and Economic Resources (RER).

E. MATERIAL CERTIFICATION

1. None.

F. OTHER

1. Letter from Cast-Crete USA, Inc., dated January 13, 2016, signed and sealed by Craig Parrino, P.E., certifying compliance with the Florida Building Code, 2014 Edition.

9. EVIDENCE SUBMITTED UNDER PREVIOUS APPROVAL #17-0227.15

A. DRAWINGS

1. None.

B. TESTS

1. Verification Test report on flexural testing on Precast Concrete Lintels Filled Models, total of (8) concrete lintel specimens, per ASTM E-529-94, prepared by FTL, Report No. 16-0425.08, dated 01/26/17, signed and sealed by Idalmis Ortega, P.E.

C. CALCULATIONS

1. None.

D. QUALITY ASSURANCE

1. By Miami-Dade County Department of Regulatory and Economic Resources (RER).

E. MATERIAL CERTIFICATION

1. None.

Helmy A. Makar, P.E., M.S.
Product Control Section Supervisor
NOA No. 20-0630.16
Expiration Date: 05/21/2022
Approval Date: 08/20/2020

NOTICE OF ACCEPTANCE: EVIDENCE SUBMITTED

10. EVIDENCE SUBMITTED UNDER PREVIOUS APPROVAL #17-0821.19

A. DRAWINGS

1. None.

B. TESTS

1. None.

C. CALCULATIONS

1. None.

D. QUALITY ASSURANCE

1. By Miami-Dade County Department of Regulatory and Economic Resources (RER).

E. MATERIAL CERTIFICATION

1. None.

F. OTHER

1. Letter from Cast-Crete USA, Inc., dated August 08, 2017, signed and sealed by Craig Parrino, P.E., certifying compliance with the Florida Building Code, 2017 Edition.

11. EVIDENCE SUBMITTED UNDER PREVIOUS APPROVAL #19-0130.13

A. DRAWINGS

1. Drawing No. FD8, titled "Cast-Crete 8" Lintel Fabrication Details", sheets 1 through 3 of 3, prepared by Craig Parrino, P.E., dated June 7, 1996, last revision dated June 12, 2014, signed and sealed by Craig Parrino, P.E., on January 22, 2019.

B. TESTS

1. None.

C. CALCULATIONS

1. None.

D. QUALITY ASSURANCE

1. By Miami-Dade County Department of Regulatory and Economic Resources (RER).

E. MATERIAL CERTIFICATION

1. None.

F. OTHER

1. Article of Conversion for a name change.

Helmy A. Makar, P.E., M.S.
Product Control Section Supervisor
NOA No. 20-0630.16
Expiration Date: 05/21/2022
Approval Date: 08/20/2020

NOTICE OF ACCEPTANCE: EVIDENCE SUBMITTED

12. NEW EVIDENCE SUBMITTED

A. DRAWINGS

1. None.

B. TESTS

1. None.

C. CALCULATIONS

1. None.

D. QUALITY ASSURANCE

1. By Miami-Dade County Department of Regulatory and Economic Resources (RER).

E. MATERIAL CERTIFICATION

1. None.

F. OTHER

1. Letter from Cast-Crete USA, Inc., dated August 08, 2017, signed and sealed by Craig Parrino, P.E., certifying compliance with the Florida Building Code, 2017 Edition.

2. Letter from Cast-Crete USA, Inc., dated June 11, 2020, signed and sealed by Craig Parrino, P.E., certifying compliance with the Florida Building Code, 2020 Edition.

Helmy A. Makar, P.E., M.S.
Product Control Section Supervisor
NOA No. 20-0630.16
Expiration Date: 05/21/2022
Approval Date: 08/20/2020

CAST-CRETE® HIGH STRENGTH PRECAST AND PRESTRESSED CONCRETE LINTELS

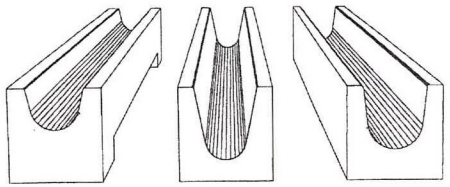

8" PRECAST W/ 2" RECESS DOOR U-LINTEL 8" PRECAST U-LINTEL 8" PRESTRESSED U-LINTEL

PRODUCT REVISED
as complying with the Florida
Building Code
Acceptance No 20-0630.16
Expiration Date 05/21/2022
By Mimmi Dee Product Control

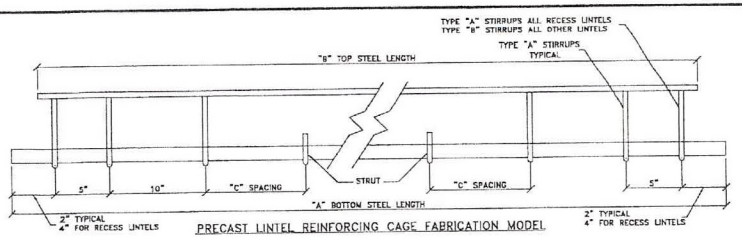

PRECAST LINTEL REINFORCING CAGE FABRICATION MODEL

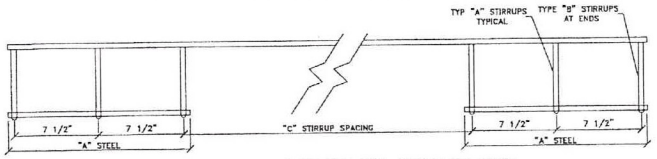

PRESTRESSED LINTEL REINFORCING CAGE FABRICATION MODEL

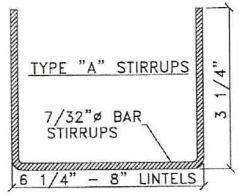

STIRRUP DETAILS
SCALE: N.T.S.

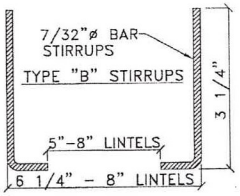

STIRRUP DETAILS
SCALE: N.T.S.

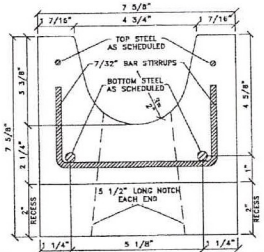

8" PRECAST W/ 2" RECESS DOOR U-LINTEL
SCALE: N.T.S.

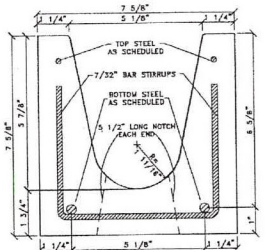

8" PRECAST U-LINTEL
SCALE: N.T.S.

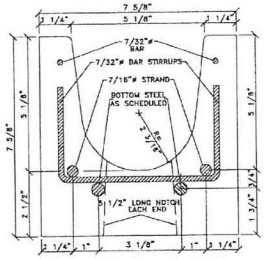

8" PRESTRESSED U-LINTEL
SCALE: N.T.S.

8" PRESTRESSED U-LINTEL DATA TABLE

LINTEL SIZE	VOLUME CY	WEIGHT LBS	" A " STEEL TYPE	" A " STEEL LENGTH	" B " TOP STEEL TYPE	" B " TOP STEEL LENGTH	" C " SPACING	NO. OF STIRRUPS
14'-8"	0.134	542	7/32 BAR	1'-3"	7/32 BAR	14'-6"	4 @ 3'-0"	9
15'-4"	0.140	567	7/32 BAR	1'-3"	7/32 BAR	15'-2"	4 @ 3'-2"	9
17'-4"	0.158	639	7/32 BAR	1'-3"	7/32 BAR	17'-2"	4 @ 3'-8"	9
19'-4"	0.176	713	7/32 BAR	1'-3"	7/32 BAR	19'-2"	4 @ 4'-2"	9
21'-4"	0.194	787	7/32 BAR #4 REBAR @ MIDSPAN	1'-3" 15'-0"	7/32 BAR	21'-2"	5 @ 3'-8 3/4"	10
22'-0"	0.200	811	7/32 BAR #4 REBAR @ MIDSPAN	1'-3" 16'-0"	7/32 BAR	21'-10"	5 @ 3'-10 3/8"	10
24'-0"	0.219	885	7/32 BAR #4 REBAR @ MIDSPAN	1'-3" 18'-0"	7/32 BAR	23'-10"	5 @ 4'-3 1/8"	10

8" PRECAST W/ 2" RECESS DOOR U-LINTEL DATA TABLE

LINTEL SIZE	OVERALL LENGTH	RECESS LENGTH	VOLUME CY	WEIGHT LBS	" A " BOTTOM STEEL TYPE	" A " BOTTOM STEEL LENGTH	" B " TOP STEEL TYPE	" B " TOP STEEL LENGTH	"C" SPACING	NO. OF STRUTS/ STIRRUPS
2'-8"	4'-4"	3'-0"	0.036	146	#3 REBAR	3'-10" PLUS HOOK	7/32 BAR	3'-8"	N/A	4
3'-0"	4'-6"	3'-4"	0.037	150	#3 REBAR	4'-0" PLUS HOOK	7/32 BAR	3'-10"	N/A	4
4'-0"	5'-8"	4'-4"	0.047	190	#3 REBAR	5'-2" PLUS HOOK	7/32 BAR	5'-0"	N/A	6
4'-4"	5'-10"	4'-8"	0.047	190	#3 REBAR	5'-2" PLUS HOOK	7/32 BAR	5'-2"	N/A	6
5'-0"	6'-8"	5'-4"	0.054	219	#4 REBAR	6'-2" PLUS HOOK	#3 REBAR	6'-0"	N/A	6
6'-0"	7'-6"	6'-4"	0.060	243	#4 REBAR	7'-0" PLUS HOOK	#3 REBAR	6'-10"	N/A	6
8'-0"	9'-8"	8'-4"	0.078	316	#4 REBAR	9'-0" PLUS HOOK	#3 REBAR	9'-0"	2'-0"	8

8" PRECAST U-LINTEL DATA TABLE

LINTEL SIZE	VOLUME CY	WEIGHT LBS	" A " BOTTOM STEEL TYPE	" A " BOTTOM STEEL LENGTH	" B " TOP STEEL TYPE	" B " TOP STEEL LENGTH	"C" SPACING	NO. OF STRUTS/ STIRRUPS
3'-6"	0.032	126	#3 REBAR	3'-5"	7/32 BAR	3'-2"	N/A	4
4'-0"	0.037	144	#3 REBAR	3'-11"	7/32 BAR	3'-8"	N/A	4
4'-6"	0.041	162	#3 REBAR	4'-5"	7/32 BAR	4'-2"	N/A	4
5'-4"	0.049	192	#3 REBAR	5'-3"	7/32 BAR	5'-0"	N/A	6
5'-10"	0.054	210	#3 REBAR	5'-9"	7/32 BAR	5'-6"	N/A	6
6'-6"	0.060	234	#4 REBAR	6'-5"	7/32 BAR	6'-2"	N/A	6
7'-6"	0.069	270	#4 REBAR	7'-5"	7/32 BAR	7'-2"	N/A	6
9'-4"	0.086	336	#4 REBAR	9'-3"	#3 REBAR	9'-0"	2'-0"	8
10'-6"	0.096	378	#4 REBAR	10'-5"	#3 REBAR	10'-2"	2'-0"	8
11'-4"	0.104	408	#5 REBAR	11'-3"	#3 REBAR	11'-0"	3'-0"	8
12'-0"	0.110	432	#5 REBAR	11'-11"	#3 REBAR	11'-8"	3'-0"	8
13'-4"	0.122	480	#5 REBAR	13'-3"	#3 REBAR	13'-0"	3'-0"	8
14'-0"	0.129	504	#5 REBAR	13'-11"	#3 REBAR	13'-8"	3'-0"	8

GENERAL NOTES:

1. REINFORCING STEEL: 7/32 BAR ASTM A510; #3, #4, #5 REBAR GRADE 60 ASTM A615; 7/16 INCH DIAMETER 270KSI LOW-RELAXATION PRESTRESSING SRTAND ASTM A416.
2. CONCRETE STRENGTHS: f'c = 6000 PSI FOR 8" PRESTRESSED LINTELS; f'c = 4000 PSI FOR ALL PRECAST 8 INCH LINTELS.
3. INITIAL PRESTRESS FORCE = 0.70 x fpu.
4. STRIPPING STRENGTH: PRESTRESSED UNTELS = 3500 PSI.
5. NOTE: THE TOTAL NUMBER OF STIRRUPS REQUIRED IS COUNTED STARTING FROM EACH END OF THE REINFORCING CAGE; FOR EXAMPLE – NO. OF STIRRUPS = 4, THEN THE REINFORCING CAGE MODEL SHOWS 2 STIRRUPS FROM EACH END.
6. 2.5 POUNDS OF POLYPROPYLENE FIBERS PER CU.YD. OF CONCRETE MAY BE USED IN LIEU OF PRESTRESSED LINTEL REINFORCING CAGE TO RESIST LIFTING AND HANDLING FORCES.

THIS PROPRIETARY INFORMATION IS PROVIDED FOR PRODUCT APPROVAL. IT IS PROTECTED BY COPYRIGHT LAWS AND CANNOT BE REPRODUCED OR DISTRIBUTED WITHOUT THE PRIOR WRITTEN CONSENT OF CAST-CRETE USA, LLC.

PRODUCT REVISED
as complying with the Florida
Building Code
Acceptance No 19-0139.13
Expiration Date 05/21/2022
By Mimmi Dee Product Control

CRAIG PARRINO
6324 CR 579
SEFFNER, FL 33584
FL. P.E. LIC. NO. 44756

CRAIG PARRINO No. 44756 STATE OF FLORIDA PROFESSIONAL ENGINEER 1-22-19

NO.	BY	REVISION	DATE
4	CP	GENERAL REVISION NUMBER ONE	11/08/96
3	TO	GENERAL REVISION NUMBER TWO	1/28/03
2	CP	NAME CHANGE & SYNTHETIC FIBER OPTION	2/17/06
1	CP	GENERAL REVISION	6/12/14
0			

MEMBER OF NATIONAL CONCRETE MASONRY ASSOCIATION

CAST-CRETE® HIGH STRENGTH PRECAST AND PRESTRESSED CONCRETE LINTELS AND SILLS
LISAL, LLC.
6324 County Road 579
Seffner, Florida 33584
Phone: 813-621-4441

TITLE: CAST-CRETE 8" LINTEL FABRICATION DETAILS

FILE NAME: DBSUB1-14	DRAWN BY: CRAIG PARRINO, P.E. – REG. NO. 44756	SCALE: NOT TO SCALE
DATE: 06/07/96	CHECKED BY: CRAIG PARRINO, P.E. – REG. NO. 44756	DRAWING No. FDB SHEET 1 OF 3

SAFE GRAVITY LOADS FOR 8" PRECAST & PRESTRESSED U-LINTELS

CAST-CRETE	SAFE LOAD - POUNDS PER LINEAR FOOT							
LENGTH \ TYPE	8U8	8F8-0B	8F12-0B	8F16-0B	8F20-0B	8F24-0B	8F28-0B	8F32-0B
		8F8-1B	8F12-1B	8F16-1B	8F20-1B	8F24-1B	8F28-1B	8F32-1B
3'-6" (42") PRECAST	2231	3069	3719	5163	6607	8054	9502	10951
		3069	4605	6113	7547	8974	10394	11809
4'-0" (48") PRECAST	1966	2561	2751	3820	4890	5961	7034	8107
		2693	4605	6113	7547	8974	10394	11809
4'-6" (54") PRECAST	1599	1969	2110	2931	3753	4576	5400	6224
		2189	4375	6113	7547 (7)	8672	10294	11809
5'-4" (64") PRECAST	1217	1349	1438	1999	2560	3123	3686	4249
		1663	3090	5365	7547 (30)	7342 (19)	8733 (19)	10127 (19)
5'-10" (70") PRECAST	1062	1105	1173	1631	2090	2549	3009	3470
		1451	2622	4360	7168 (45)	6036 (19)	7181 (19)	8328 (20)
6'-6" (78") PRECAST	908	1238	2177	3480	3031	3707	4383	5061
		1238	2177	3480	5381	8360	10394 (37)	8825 (14)
7'-6" (90") PRECAST	743	1011	1729	2632	2205	2698	3191	3685
		1011	1729	2661	3898	5681	8467 (44)	6472 (15)
9'-4" (112") PRECAST	554	699	1160	1625	2564	3486	2818	3302
		752	1245	1843	2564	3486	4705 (37)	6390 (47)
10'-6" (126") PRECAST	475	535	890	1247	2093	2777	2163	2536
		643	1052	1533	2093	2781	3643 (38)	4754 (45)
11'-4" (136") PRECAST	362	582	945	1366	1846	2423	3127	4006
		582	945	1366	1846	2423	3127	4006
12'-0" (144") PRECAST	337	540	873	1254	1684	2193	2805	3552
		540	873	1254	1684	2193	2805	3552
13'-4" (160") PRECAST	296	471	755	1075	1428	1838	2316	2883
		471	755	1075	1428	1838	2316	2883
14'-0" (168") PRECAST	279	424	706	1002	1326	1697	2127	2630
		442	706	1002	1326	1697	2127	2630
14'-8" (176") PRESTRESSED	N.R.	NR	NR	NR	NR	NR	NR	NR
		458	783	1370	1902	2245	2517	2712
15'-4" (184") PRESTRESSED	N.R.	NR	NR	NR	NR	NR	NR	NR
		412	710	1250	1733	2058	2320	2513
17'-4" (208") PRESTRESSED	N.R.	NR	NR	NR	NR	NR	NR	NR
		300	548	950	1326	1609	1849	2047
19'-4" (232") PRESTRESSED	N.R.	NR	NR	NR	NR	NR	NR	NR
		235	420	750	1037	1282	1515	1716
21'-4" (256") PRESTRESSED	N.R.	NR	NR	NR	NR	NR	NR	NR
		180	340	598	845	1114	1359	1468
22'-0" (264") PRESTRESSED	N.R.	NR	NR	NR	NR	NR	NR	NR
		165	315	550	784	1047	1285	1399
24'-0" (288") PRESTRESSED	N.R.	NR	NR	NR	NR	NR	NR	NR
		129	250	450	654	884	1092	1222

(#) THE NUMBERS IN PARENTHESIS ARE PERCENT REDUCTIONS FOR GRADE 40 FIELD ADDED REBAR. SEE GENERAL NOTE NO. 4 ON SHEET 3 OF 3.

SAFE LATERAL LOADS FOR 8" PRECAST & PRESTRESSED U-LINTELS

CAST-CRETE	SAFE LOAD PLF		
LENGTH \ TYPE	8U8	8F8	RCMU *
3'-6" (42") PRECAST	1025	1024	1598
4'-0" (48") PRECAST	765	763	1309
4'-6" (54") PRECAST	592	591	1073
5'-4" (64") PRECAST	411	411	745
5'-10" (70") PRECAST	340	339	616
6'-6" (78") PRECAST	507	721	490
7'-6" (90") PRECAST	424	534	363
9'-4" (112") PRECAST	326	512	230
10'-6" (126") PRECAST	284	401	180
11'-4" (136") PRECAST	260	452	154
12'-0" (144") PRECAST	244	402	137
13'-4" (160") PRECAST	217	324	110
14'-0" (168") PRECAST	205	293	100
14'-8" (176") PRESTRESSED	N.R.	284	91
15'-4" (184") PRESTRESSED	N.R.	259	83
17'-4" (208") PRESTRESSED	N.R.	194	64
19'-4" (232") PRESTRESSED	N.R.	148	52
21'-4" (256") PRESTRESSED	N.R.	125	42
22'-0" (264") PRESTRESSED	N.R.	116	40
24'-0" (288") PRESTRESSED	N.R.	91	33

* SEE GENERAL NOTE NO. 18 ON SHEET 3 OF 3.

PRODUCT REVISED
as complying with the Florida Building Code
Acceptance No. 20-0630.16
Expiration Date 05/21/2022
By Hedy A. Miller
Miami Dade Product Control

SAFE UPLIFT LOADS FOR 8" PRECAST & PRESTRESSED U-LINTELS

CAST-CRETE	SAFE LOAD - POUNDS PER LINEAR FOOT						
LENGTH \ TYPE	8F8-1T	8F12-1T	8F16-1T	8F20-1T	8F24-1T	8F28-1T	8F32-1T
	8F8-2T	8F12-2T	8F16-2T	8F20-2T	8F24-2T	8F28-2T	8F32-2T
3'-6" (42") PRECAST	1569	2655	3524	4394	5263	6132	7001
	1569	2655	3524	4394	5263	6132	7001
4'-0" (48") PRECAST	1363	2305	3060	3815	4570	5325	6079
	1363	2305	3060	3815	4570	5325	6079
4'-6" (54") PRECAST	1207	2040	2707	3375	4043	4711	5379
	1207	2040	2707	3375	4043	4711	5379
5'-4" (64") PRECAST	1016	1715 (11)	2276 (4)	2838	3399	3961	4522
	1016	1715	2276	2838	3399	3961	4522
5'-10" (70") PRECAST	909	1567 (18)	2080 (13)	2593 (9)	3107 (6)	3620 (4)	4133 (3)
	929	1567	2080	2593	3107	3620	4133
6'-6" (78") PRECAST	835 (12)	1407 (26)	1868 (21)	2329 (18)	2790 (16)	3251 (14)	3712 (12)
	835	1407	1868	2329	2790	3251	3712
7'-6" (90") PRECAST	727 (23)	1065 (26)	1624 (21)	2025 (28)	2426 (26)	2827 (25)	3228 (24)
	727	1224	1624	2025	2426	2827	3228
9'-4" (112") PRECAST	591	708 (25)	1136 (24)	1474 (24)	1815 (24)	2157 (24)	2500 (24)
	591	862	1318	1643	1969	2294	2619
10'-6" (126") PRECAST	530	575 (24)	916 (23)	1188 (23)	1461 (23)	1736 (23)	2011 (23)
	530	695	1180 (8)	1472 (4)	1763 (2)	2055	2346
11'-4" (136") PRECAST	474	504 (23)	800 (22)	1037 (22)	1274 (22)	1513 (22)	1753 (22)
	494	607	1042 (10)	1372 (11)	1643 (8)	1915 (8)	2187 (5)
12'-0" (144") PRECAST	470 (8)	458 (25)	724 (31)	938 (22)	1153 (22)	1369 (22)	1585 (22)
	470	550	940 (10)	1302 (15)	1560 (13)	1818 (11)	2075 (10)
13'-4" (160") PRECAST	418 (15)	386 (22)	607 (20)	785 (20)	964 (20)	1143 (21)	1323 (21)
	428	460	780 (8)	1159 (21)	1418 (20)	1653 (19)	1887 (17)
14'-0" (168") PRECAST	384 (15)	358 (21)	560 (23)	724 (20)	889 (20)	1054 (20)	1220 (20)
	410	425	717 (8)	1063 (21)	1358 (23)	1582 (22)	1807 (21)
14'-8" (176") PRESTRESSED	239	334 (21)	520 (25)	672 (25)	825 (25)	978 (25)	1131 (20)
	246	395	663 (6)	980 (21)	1303 (26)	1518 (25)	1734 (24)
15'-4" (184") PRESTRESSED	224	313 (20)	486 (28)	627 (23)	769 (23)	911 (23)	1054 (23)
	230	368	616 (8)	908 (26)	1240 (28)	1460 (27)	1668 (26)
17'-4" (208") PRESTRESSED	187	263 (19)	405 (26)	521 (27)	638 (27)	756 (27)	873 (27)
	192	306	506 (8)	740 (19)	1005 (27)	1271 (31)	1473 (31)
19'-4" (232") PRESTRESSED	162	229 (17)	348 (25)	447 (25)	547 (25)	647 (25)	747 (25)
	166	263	429 (6)	623 (18)	841 (29)	1059 (30)	1227 (30)
21'-4" (256") PRESTRESSED	142	204 (16)	307 (25)	393 (23)	480 (23)	568 (24)	655 (24)
	142	232	373 (7)	537 (17)	721 (25)	905 (29)	1048 (29)
22'-0" (264") PRESTRESSED	137	197 (15)	295 (22)	379 (23)	462 (23)	546 (23)	630 (23)
	137	223	358 (7)	513 (17)	688 (24)	863 (28)	999 (28)
24'-0" (288") PRESTRESSED	124	179 (14)	267 (21)	342 (21)	416 (21)	492 (21)	567 (22)
	124	202	319 (7)	455 (15)	606 (20)	757 (24)	907 (24)

(#) THE NUMBERS IN PARENTHESIS ARE PERCENT REDUCTIONS FOR GRADE 40 FIELD ADDED REBAR. SEE GENERAL NOTE NO. 4 ON SHEET 3 OF 3.

PRODUCT REVISED
as complying with the Florida Building Code
Acceptance No. 19-0130.13
Expiration Date 05/21/2022
By Hedy A. Miller
Miami Dade Product Control

CRAIG PARRINO
6324 CR 579
SEFFNER, FL 33584
FL. P.E. LIC. NO. 44756

CRAIG PARRINO LICENSE No. 44756 STATE OF FLORIDA PROFESSIONAL ENGINEER 1-22-19

SEE GENERAL NOTES – SHEET 3 OF 3

NO.	BY	REVISION	DATE
1	CP	GENERAL REVISION NUMBER ONE	11/08/96
2	CP	RECESS TYPE DESIGNATION	12/30/96
3	CP	8U8 11'-4" THRU 14'-0"	11/08/96
4	CP	GENERAL REVISION	4/28/98
5	CP	GENERAL REVISION	3/24/03
6	CP	NAME CHANGE	2/17/06
7	CP	GENERAL REVISION	6/12/14

MEMBER OF CRM NATIONAL CONCRETE MASONRY ASSOCIATION

CAST-CRETE USA, LLC. HIGH STRENGTH PRECAST AND PRESTRESSED CONCRETE LINTELS AND SILLS 6324 County Road 579 Seffner, Florida 33584 Phone: 813-621-4641

TITLE: CAST-CRETE 8" LINTEL FABRICATION DETAILS

FILE NAME: DBSUBZ-14	DRAWN BY: CRAIG PARRINO, P.E. – REG. NO. 44756	SCALE: NOT TO SCALE	
DATE: 06/07/95	CHECKED BY: CRAIG PARRINO, P.E. – REG. NO. 44756	DRAWING No. FD8	SHEET 2 OF 3

SAFE GRAVITY LOADS FOR 8" PRECAST w/ 2" RECESS DOOR U-LINTELS

CAST-CRETE	SAFE LOAD - POUNDS PER LINEAR FOOT							
TYPE / LENGTH	8RU6	8RF6-0B	8RF10-0B	8RF14-0B	8RF18-0B	8RF22-0B	8RF26-0B	8RF30-0B
		8RF6-1B	8RF10-1B	8RF14-1B	8RF18-1B	8RF22-1B	8RF26-1B	8RF30-1B
4'-4" (52") PRECAST	1635	1749	3355	3280	4349	5421	6493	7567
		1891	3699	5206	6639	8060	9479	10893
4'-6" (54") PRECAST	1494	1596	3063	2992	3968	4946	5924	6904
		1756	3699	5206	6639	8060	9479	10893
5'-8" (68") PRECAST	866	920	1770	1716	2277	2839	3402	3966
		1167	2481	4567	6389	8060 (34)	7917 (19)	9311 (19)
5'-10" (70") PRECAST	810	859	1653	1600	2124	2649	3174	3700
		1113	2342	4242	6639 (10)	8060 (33)	7402 (19)	8706 (19)
6'-8" (80") PRECAST	797	901	1825	3120	5048	7747	9448	7360
		901	1825	3120	5048	7915	9479	10893 (32)
7'-6" (90") PRECAST	669	755	1490	2459	3776	5743	7239	5623
		755	1490	2459	3776	5743	8998 (19)	10893 (45)
9'-8" (116") PRECAST	411	466	999	1568	2253	3129	4091	3146
		526	999	1568	2253	3129	4150	5891 (47)

(#) THE NUMBERS IN PARENTHESIS ARE PERCENT REDUCTIONS FOR GRADE 40 FIELD ADDED REBAR. SEE GENERAL NOTE NO. 4

SAFE LATERAL LOADS FOR 8" PRECAST w/ 2" RECESS DOOR U-LINTELS

CAST-CRETE	SAFE LOAD PLF		
TYPE / LENGTH	8RU6	8RF6	RCMU *
4'-4" (52") PRECAST	758	757	1164
4'-6" (54") PRECAST	694	693	1073
5'-8" (68") PRECAST	408	407	655
5'-10" (70") PRECAST	382	381	616
6'-8" (80") PRECAST	595	788	464
7'-6" (90") PRECAST	509	674	363
9'-8" (116") PRECAST	370	490	214

* SEE GENERAL NOTE 18

SAFE UPLIFT LOADS FOR 8" PRECAST w/ 2" RECESS DOOR U-LINTELS

CAST-CRETE	SAFE LOAD - POUNDS PER LINEAR FOOT						
TYPE / LENGTH	8RF6-1T	8RF10-1T	8RF14-1T	8RF18-1T	8RF22-1T	8RF26-1T	8RF30-1T
	8RF6-2T	8RF10-2T	8RF14-2T	8RF18-2T	8RF22-2T	8RF26-2T	8RF30-2T
4'-4" (52") PRECAST	905	1668	2362	3056	3751	4445	5140
	905	1668	2362	3056	3751	4445	5140
4'-6" (54") PRECAST	867	1604	2272	2939	3607	4275	4943
	867	1604	2272	2939	3607	4275	4943
5'-8" (68") PRECAST	675	1269 (16)	1797	2326 (5)	2854 (2)	3382	3911
	675	1269	1797	2326	2854	3382	3911
5'-10" (70") PRECAST	655	1207 (16)	1746 (11)	2259 (7)	2773 (5)	3286 (3)	2799 (1)
	655	1233	1746	2259	2773	3286	2799
6'-8" (80") PRECAST	570	929 (18)	1530 (22)	1980 (19)	2429 (16)	2879 (15)	3329 (14)
	570	1080	1530	1980	2429	2879	3329
7'-6" (90") PRECAST	506	742 (16)	1364 (30)	1765 (27)	2166 (25)	2567 (24)	2968 (23)
	506	898	1364	1765	2166	2567	2968
9'-8" (116") PRECAST	395	468 (15)	884 (32)	1222 (33)	1540 (34)	1859 (34)	2180 (34)
	395	560	1072	1386	1701	2016	2331

(#) THE NUMBERS IN PARENTHESIS ARE PERCENT REDUCTIONS FOR GRADE 40 FIELD ADDED REBAR. SEE GENERAL NOTE NO. 4

GENERAL NOTES

1) Materials:
   - f'c 8" precast lintel = 4000 psi
   - f'c prestressed lintel = 6000 psi
   - f'c grout = 3000 psi with maximum 3/8 inch aggregate
   - concrete masonry units (CMU) per ASTM C90 with minimum net area compressive strength = 1900 psi
   - rebar per ASTM A615 Grade 60
   - prestressing strand per ASTM A416 Grade 270 low relaxation
   - mortar per ASTM C270 Type M or S
2) All safe load tables based on minimum 4 inch nominal bearing.
   Exception: Safe loads for lintel type 8U8 and 8RU6 must be reduced by 20% if bearing length is less than 6 1/2 inches.
3) Provide full mortar bed and head joints.
4) The number in parenthesis indicates the percent reduction for grade 40 field added rebar.
   Example: 7'-6" Lintel 8F32-1B safe gravity load = 6472 (15) w/ 15% reduction → 6472 (.85) = 5501 plf
5) All lintels meet or exceed L/360 deflection.
   Exception: Prestress lintel type 8F8 17'-4" and longer meets or exceeds L/180 deflection.
   Use is limited to conditions meeting the Florida Building Code Sections 1604.3.1 as applicable
6) Shore filled lintels as required.
7) One #7 rebar may be substituted for two #5 rebars.
8) Installation/attachment of lintel must comply with the architectural and/or structural documents.
9) The designer may evaluate concentrated loads from the safe load tables by calculating the maximum resisting moment and shear at d-away from the face of support.
10) N.R. = Not Rated
11) Bottom field added rebar to be located at the bottom of the lintel cavity.
12) Lintels are manufactured with 5-1/2" long notches at the ends to accomodate vertical cell reinforcing and grouting.
13) The exterior surface of lintels installed in exterior concrete masonry walls shall have a coating of stucco applied in accordance with ASTM C-926 or other approved coating.
14) Lintels loaded simultaneously with vertical (gravity or uplift) and horizontal (lateral) loads should be checked for the combined loading with the following equation:

$$\frac{\text{Applied vertical load}}{\text{Safe vertical load}} + \frac{\text{Applied horizontal load}}{\text{Safe horizontal load}} \leq 1.0$$

15) For composite lintel heights not shown, use safe load from next lower height shown.
16) For lintel lengths not shown, use safe load from next longest length shown.
17) Safe loads are superimposed allowable loads.
18) Safe loads based on rational design analysis per ACI 530 and ACI 318
19) Additional lateral load capacity can be obtained by the designer by providing additional reinforced concrete masonry units (RCMU) above the lintel. See sketch below:

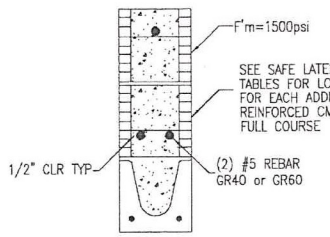

TYPE DESIGNATION

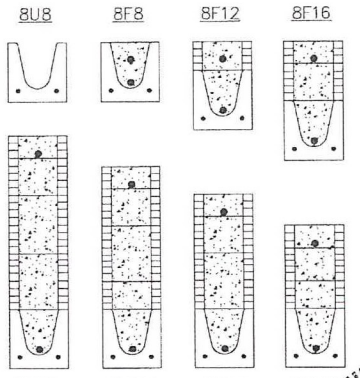

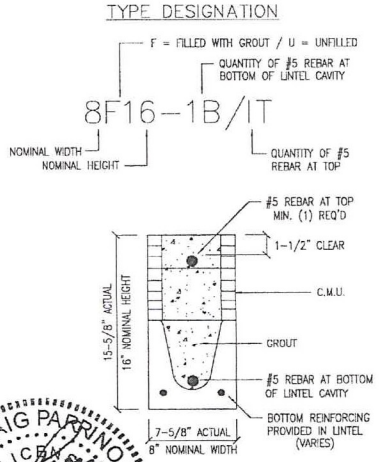

PRODUCT REVISED as complying with the Florida Building Code Acceptance No 20-0630.16 Expiration Date 05/21/2022 By Miami Dade Product Control

PRODUCT REVISED as complying with the Florida Building Code Acceptance No 19-0130.13 Expiration Date 05/21/2022 By Miami Dade Product Control

CRAIG PARRINO LICENSE No. 44756 STATE OF FLORIDA PROFESSIONAL ENGINEER 1-22-19

CRAIG PARRINO
6324 CR 579
SEFFNER, FL 33584
FL. P.E. LIC. NO. 44756

NO.	BY	REVISION	DATE
7	CP	GENERAL REVISION NUMBER ONE	11/08/96
6	CP	RECESS TYPE DESIGNATION	12/30/96
5	CP	8U8 11'-4" THRU 14'-0"	11/08/96
4	CP	GENERAL REVISION	4/28/98
3	CP	GENERAL REVISION	3/24/03
2	CP	NAME CHANGE	2/17/06
1	CP	GENERAL REVISION	6/12/14

MEMBER OF NATIONAL CONCRETE MASONRY ASSOCIATION

CAST-CRETE USA, LLC. HIGH STRENGTH PRECAST AND PRESTRESSED CONCRETE LINTELS AND SILLS 6324 County Road 579 Seffner, Florida 33584 Phone: 813-621-4641

TITLE: CAST-CRETE 8" LINTEL FABRICATION DETAILS

FILE NAME: DBSUB3-14	DRAWN BY: CRAIG PARRINO, P.E. - REG. NO. 44756	SCALE: NOT TO SCALE
DATE: 06/07/96	CHECKED BY: CRAIG PARRINO, P.E. - REG. NO. 44756	DRAWING No. FD8 SHEET 3 OF 3

STRUCTURAL CALCULATIONS

ADDITION TO RESIDENCE
LOCATED AT
200 N. SPLANADE DRIVE
MIAMI SPRINT, FLORIDA

PREPARED BY:

JOSE L. GUZMAN P.E.
4869 SW 75TH Ave, Miami, FL 33155
Tel.786.338.1082.

March 15, 2022

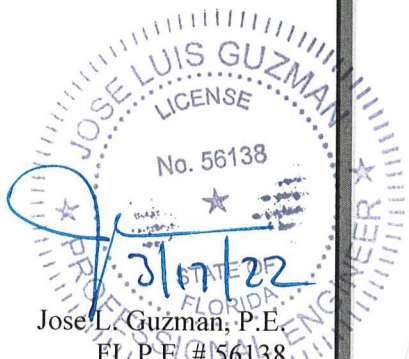

Jose L. Guzman, P.E.
FL P.E. # 56138

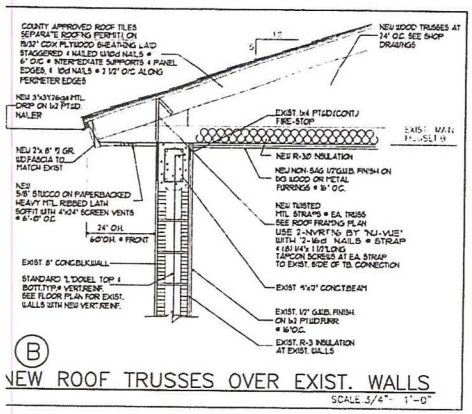

(B)

NEW ROOF TRUSSES OVER EXIST. WALLS

SCALE 3/4"= 1'-0"

GRAVITY & UPLIFT LOADS

A	GRAVITY: 335# NET UPLIFT: 325# USE 2-NVR7HS BY "NU-VUE" WITH 12-16d NAILS @ STRAP & (8) 1/4"x 1 1/2" LONG TAPCON SCREWS AT EA STRAP TO EXIST SIDE OF TB. CONNECTION	E	GRAVITY: 3,756# NET UPLIFT: 3,756# USE (1)SPECIAL BRACKET SEE DETAIL SHEET A-3 ALSO USE AT OTHER SIDE
B	GRAVITY: 2,329# (DOUBLE STRAP) NET UPLIFT: 2,456# USE (1)-NAVHTA2 BY "NU-VUE" WITH 18-16d NAILS & 2-STRAPS @ 8-16d NAILS @ SEAT H.O.A.# 26-6760105	BB	GRAVITY: 2,329# (DOUBLE STRAP) NET UPLIFT: 2,456# USE 2-NVR7HS BY "NU-VUE" WITH 12-16d NAILS @ EACH STRAP & (8) 1/4"x 1 1/2" LONG TAPCON SCREWS AT EA STRAP TO EXIST. SIDE OF TB. CONNECTION
C	GRAVITY: 1,126# NET UPLIFT: 1,126# USE 2-NVR7HS BY "NU-VUE" WITH 12-16d NAILS @ STRAP & (8) 1/4"x 1 1/2" LONG TAPCON SCREWS AT EA STRAP TO EXIST SIDE OF TB CONNECTION		
D	GRAVITY: 3,870# NET UPL.FT. 3,970# USE (1)SPECIAL BRACKET SEE DETAIL SHEET A-3 ALSO USE AT OTHER SIDE		

I CERTIFY THIS IS BEING DESIGNED TO WITHSTAND 175 MPH WIND SPEED ACCORDING TO ASCE 7-16 AS REQUIRED BY THE FLORIDA BUILDING CODE REVISED 2020 EDITION 7th EDITION

BEAM SCHEDULE:

AT (8'-0") A.F.F.) =8"x12" CONCRETE BEAM WITH 4#5 CONT. & (2) 60" NG BENT BARS AT CORNERS. PROVIDE #3 TIES (4) FROM NERS AT 12" REM. AT 48"O.C. L NEW TIE BEAMS TO MATCH EXISTING TB. ELEVATION

1 AT (8'-0") A.F.F.) =8"x12" CONCRETE BEAM WITH 2#5 TOP, 2#5 BOT TH (2) #5 60" LONG BENT BARS AT CORNERS. PROVIDE #3 TIES (4) FROM RNERS AT 3" REM. AT 5 "O.C.

ROOF VENTILATION CALCULATIONS:

OR TRUSS PORTION ONLY

(SOFFIT) (RIDGE) OPTIONAL (NOT PROVIDED)

EQUIRED 1'/150 VENT TO CEILING RATIO

EW TRUSS ROOF AREA = 2,950 SQ. FT. "WITH OVERHANG"

950/150 = 19.66 SQ. FT. OF VENTING AREA REQUIRED

ESIGN SELECTION: 4"X24" ALUM. SCREEN = 0.66 S.Q. FT.

TAL REQ'D. 19.66 S.Q. FT. / 0.66 = 30 PCS.

ROPOSED PROVIDED: 28 PCS

FOR WOOD AND FRAMING NOTES SEE SHEET A-3

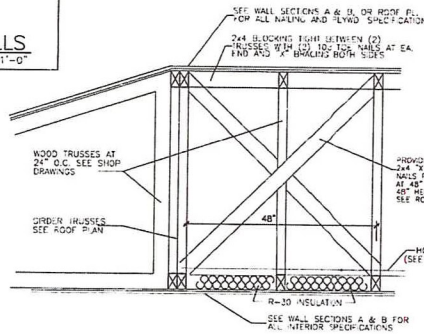

TYP. CROSS BRACING SECTION

SCALE: 3/4"= 1'-0"

-14 R9.7.7
ERIOR PERIMETER BEAMS

least one-quarter maximum positive nt reinforcement, t less than two r strands, shall tinuous. (b) dinal rement shall be d by closed in accordance 3.7.1.6 or hoops the clear span of am.

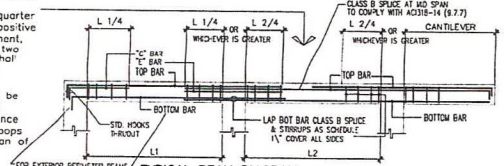

TYPICAL BEAM DIAGRAM

"C" BARS - ARE TOP BARS AT NON-CONTINUOUS ENDS
"E" BARS - ARE TOP BARS OVER RIGHT INTERIOR SUPPORTS
TOP BARS - CALLED FOR AS CONTINUOUS, WHEN SPLICED, SHALL BE SPLICED IN THE MIDDLE THIRD OF THE SPAN

WOOF TRUSS ROOF DESIGN LOADS:

T.C.L.L.	= 30 P.S.F.
T.C.D.L.	= 15 P.S.F.
B.C.D.L.	= 10 P.S.F.
TOTAL	= 55 P.S.F.

THIS IS A ROOF TRUSS TYPE SYSTEM

NOTE: ROOF TRUSS SHOP DRAWINGS AND ENGINEERING PACKAGE TO BE SUBMITTED AND PROCESSED UNDER A SEPARATE PERMIT.

NOTE ALL NEW ROOFING SYSTEM MATERIALS TO HAVE A VALID N.O.A. PRODUCT APPROVAL & TO BE SUBMITTED FOR REVIEW AT TIME OF ROOFING PERMIT APPLICATION UNDER SEPARATE SUB PERMIT

NOTE ALL EXTERIOR WALL COVERING AND ROOF ASSEMBLIES AND ROOF TOP STRUCTURES SHALL COMPLY WITH HI-VELOCITY HURRICANE ZONE AS PER CHAPTER 44, R4401.1 & R4402.1 OF THE F.B.C. RESIDENTIAL 2020-7th EDITION

NOTE GENERAL CONTRACTOR TO FIELD VERIFY ALL EXISTING FIELD CONDITIONS & DIMENSIONS WITH ALL PROPOSED NEW CONSTRUCTION PRIOR TO ANY NEW CONSTRUCTION FABRICATION OR INSTALLATIONS INCLUDING BUT NOT LIMITED TO NEW TRUSS SIZES PITCH LENGTHS DIMENSIONS ETC

NOTE FOR ALL STRAPS SPECIFIED SEE SPECS ON PRODUCT APPROVAL ATTACHED ALL STRAPS TO BE BY "NU-VUE" OR APPROVED EQUAL

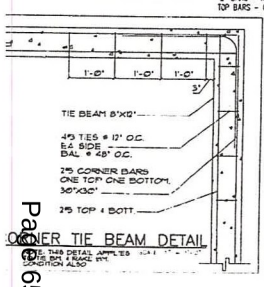

CORNER TIE BEAM DETAIL

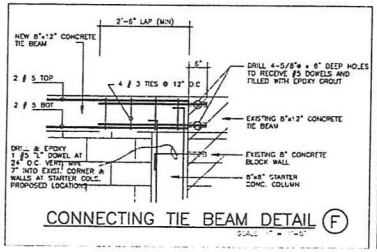

CONNECTING TIE BEAM DETAIL (F)

SCALE: 1" = 1'-0"

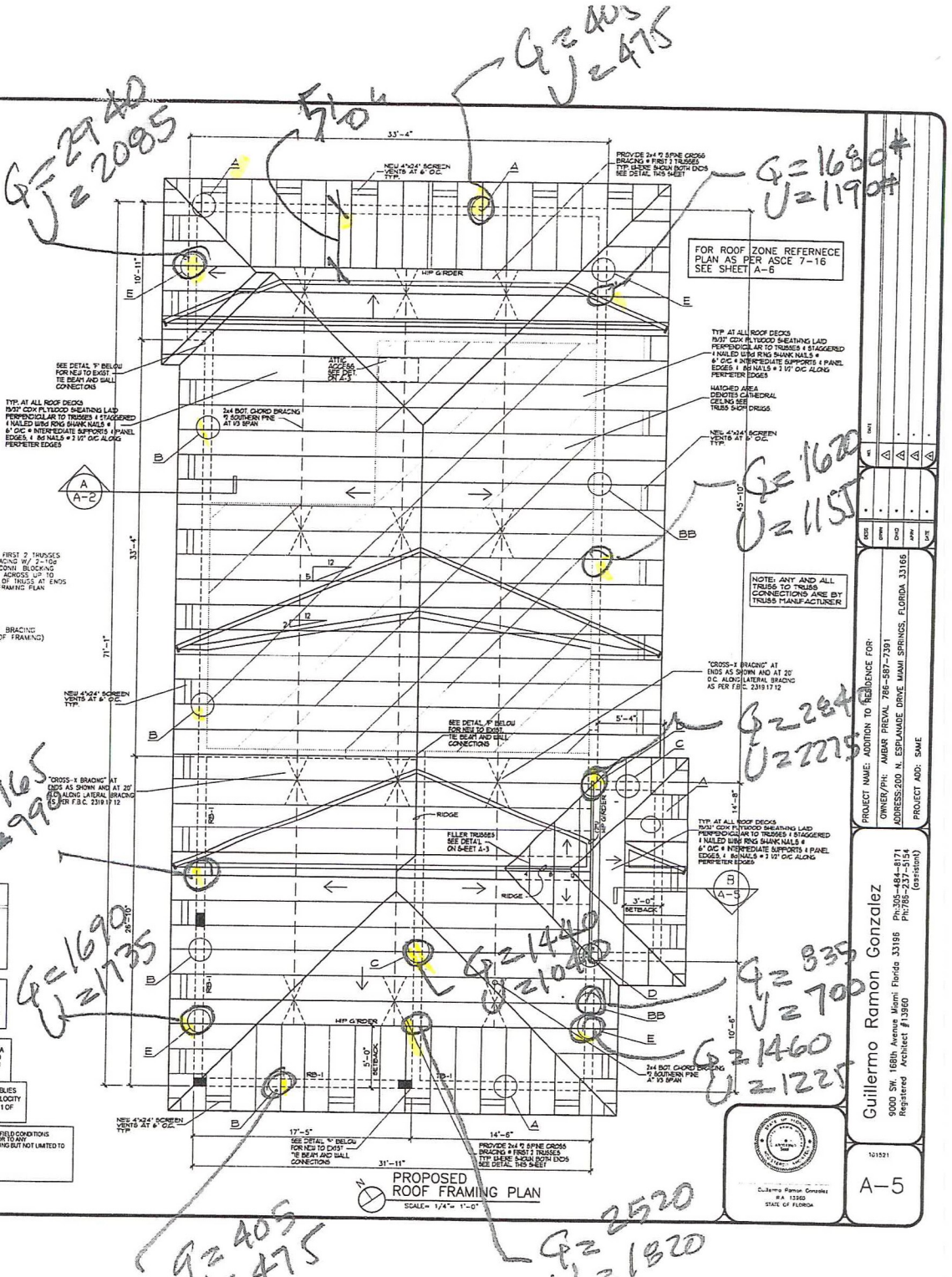

Q=2940 U=2085
Q=405 U=475
Q=1680 U=1190
Q=1620 U=1155
Q=2840 U=2275
Q=965 U=990
Q=1690 U=1735
Q=1460 U=1225
Q=835 U=700
Q=2520 U=1820
Q=405 U=475

PROJECT NAME: ADDITION TO RESIDENCE FOR:
OWNER/PH: AMBAR PROVAL 786-587-7391
ADDRESS: 200 N. ESPLANADE DRIVE MIAMI SPRINGS, FLORIDA 33166
PROJECT ADD: SAME

Guillermo Ramon Gonzalez
9000 SW. 168th Avenue Miami Florida 33196
Registered Architect #13960
Ph:305-484-8171
Ph:786-237-5154 (assistant)

Guillermo Ramon Gonzalez R.A. 13960 STATE OF FLORIDA

101521

A-5

JOSE GUZMAN P.E.
16581 SW 64 terrace
MIAMI, FLORIDA
786-338-1082
JGUZMANALBA@AOL.COM

JOB _____

SHEET NO. _____ OF _____

CALCULATED BY _____ DATE _____

CHECKED BY _____ DATE _____

SCALE _____

ROOF UPLIFT / GRAVITY.

① (36-10)2 = 52'

2-0 | 33'-4" | 2-0 (91-10)2 = 162

$U = \frac{33.33}{2} \cdot 52 + 162 \times 2 = 1190\#$

$Q = \left(\frac{33.33}{2} + 2\right) 90 = 1680\#$

②

2-0 | 31-11 | 2-0

$U = \frac{31.92}{2} \cdot 52 + 162 \times 2 = 1155\#$

$Q = \left(\frac{31.92}{2} + 2\right) 90 = 1620\#$

③ 162 (40-10)2 = 76 52 162

1 | 17-5 | 2 | 14-6 | 3

$U_1 = 2 \times 162 + \frac{17.42}{2} \cdot 76 = 990$

$U_2 = \frac{17.42}{2} \times 76 + \frac{14.5}{2} 52 = 1040$

$U_3 = \frac{14.5}{2} \cdot 52 + 2 \times 162 = 700$

JOSE GUZMAN P.E.
16581 SW 64 terrace
MIAMI, FLORIDA
786-338-1082
JGUZMANALBA@AOL.COM

JOB
SHEET NO. OF
CALCULATED BY DATE
CHECKED BY DATE
SCALE

(3) CONT.

$Q_1 = \left(\frac{17.42}{2} + 2\right) 90 = 965$

$Q_2 = \frac{17.5 + 14.5}{2} \cdot 90 = 1440$

$Q_3 = \left(\frac{14.5}{2} + 2\right) 90 = 835$ #

(4)

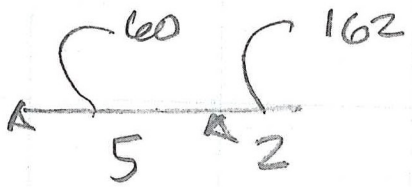

$V\ 2.5 \times 60 + 2 \times 162 = 475$

$Q = 4.5 \times 90 = 405$

(5)

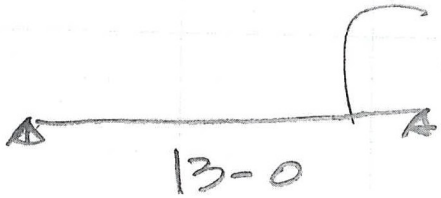

$V = 19.42/2 \times 36 = 350$
$Q = \times 45 = 437$

$V = 350 \times 6.5 = 2275$ #

$Q = 437 \times 6.5 = 2840$ #

JOSE GUZMAN P.E.
16581 SW 64 terrace
MIAMI, FLORIDA
786-338-1082
JGUZMANALBA@AOL.COM

JOB _____

SHEET NO. _____ OF _____

CALCULATED BY _____ DATE _____

CHECKED BY _____ DATE _____

SCALE _____

AT OPEN AREA.

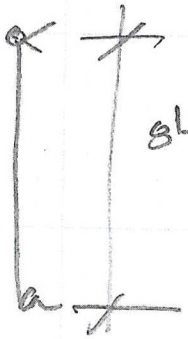

$8'-2 + 0.67 = 8'-10''$

wind load = 61.61

CLOSED AREAS



$8'-10''$ wind load = 49.1 psf

Title :
Dsgnr:
Description :

Job #
Date: 12:58PM, 13 MAR 22

Scope :

Masonry Wall Design

Description

General Information

Code Ref: ACI 530-02

Wall Height	8.83 ft	Seismic Factor	0.0000	f'm	1,500.0 psi
Parapet Height	0.00 ft	Calc of Em = f'm *	900.00	Fs	24,000.0 psi
		Duration Factor	1.000	Special Inspection	
Thickness	8.0 in	Wall Wt Mult.	1.000	Grout @ Rebar Only	
Rebar Size	5			Normal Weight Block	
Rebar Spacing	40 in			Equivalent	
Depth to Rebar	3.810 in @ Center			Solid Thickness	4.700 in

Loads

Uniform Load		Concentric Axial Load		Wind Load	61.610 psf
Dead Load	0.000 #/ft	Dead Load	0.000 #/ft		
Live Load	0.000 #/ft	Live Load	0.000 #/ft		
Load Eccentricity	0.000 in	Roof Load			
Roof Load					

Design Values

E	1,350,000 psi	Rebar Area	0.093 in2	np	0.04370	j	0.91495
n : Es / Em	21.481	Radius of Gyration	2.521 in	k	0.25514	2 / kj	8.56756
Wall Weight	56.000 psf	Moment of Inertia	358.350 in4				

Max Allow Axial Stress = 0.25 f'm (1-(h/140r)^2) * SpInsp	341.19 psi
Allow Masonry Bending Stress = 0.33 f'm * SpInsp =	495.00 psi
Allow Steel Bending Stress =	24,000.00 psi

Load Combination & Stress Details Summary

	Moment in-#	Axial Load lbs	Bending Stresses Steel psi	Bending Stresses Masonry psi	Axial Compression psi
Top of Wall					
DL + LL	0.0	0.0	0.0	0.0	0.00
DL + LL + Wind	0.0	0.0	0.0	0.0	0.00
DL + LL + Seismic	0.0	0.0	0.0	0.0	0.00
Between Base & Top of Wall					
DL + LL	0.0	247.2	0.0	0.0	4.38
DL + LL + Wind	7,205.5	247.2	22,225.7	354.4	4.38
DL + LL + Seismic	0.0	247.2	0.0	0.0	4.38

Summary

8.83ft high wall with 0.00ft parapet, Normal Block w/ 8.00in wall w/ #5 bars at 40.00ino.c. at center

Max. Bending Compressive Stress	358.78	OK
Allowable	495.00	OK
Max. Axial Only Compressive Stress	4.38	psi
Allowable	341.19	OK
Max Steel Bending Stress	22,225.75	psi
Allowable	24,000.00	OK

Description

Final Loads & Moments

Wall Weight moment @ Mid Ht	247.24 lbs	Wind Moment @ Mid Ht	7,205.49 in-#
		Seismic Moment @ Mid Ht	0.00 in-#
Dead Load Moment @ Top of Wall	0.00 in-#		
Dead Load Moment @ Mid Ht	0.00 in-#	Total Dead Load	0.00 lbs
		Total Live Load	0.00 lbs
Live Load Moment @ Top of Wall	0.00 in-#		
LiveLoad Moment @ Mid Ht	0.00 in-#		
Maximum Allow Moment for Applied Axial Load =		7,780.70 in-#	
Maximum Allow Axial Load for Applied Moment =		19,243.18 lbs	

MecaWind v2403

Software Developer: Meca Enterprises Inc., www.meca.biz, Copyright © 2020

Calculations Prepared by:
True
Address
City, State,
Date: Mar 13, 2022
Designer: 0

Calculations Prepared For:
Client: 0
Project #: 0
Location: 0

File Location : H:\0-ALFONSO\AMBER PRIVAL\CLOSED.wnd

Basic Wind Parameters

Wind Load Standard	= ASCE 7-16	Exposure Category	= C
Wind Design Speed	= 175.0 mph	Risk Category	= II
Structure Type	= Building	Building Type	= Enclosed

General Wind Settings

Incl_LF	= Include ASD Load Factor of 0.6 in Pressures	= True
DynType	= Dynamic Type of Structure	= Rigid
Zg	= Altitude (Ground Elevation) above Sea Level	= 0.000 ft
Bdist	= Base Elevation of Structure	= 0.000 ft
SDB	= Simple Diaphragm Building	= True
MWFRSType	= MWFRS Method Selected	= Ch 27 Pt 1

Topographic Factor per Fig 26.8-1

Topo	= Topographic Feature	= None
Kzt	= Topographic Factor	= 1.000

Building Inputs

RoofType:	Building Roof Type	= Hipped	W :	Width Perp to Ridge	= 34.000 ft
L :	Length Along Ridge	= 71.000 ft	EHt :	Eave Height	= 8.500 ft
Hip :	Ridge Hipped Length	= 4.000 ft	RE :	Roof Entry Method	= Slope
Slope :	Slope of Roof	= 5.0 :12	Theta :	Roof Slope	= 22.62 Deg
Par :	Is there a Parapet	= False			

Exposure Constants per Table 26.11-1:

Alpha:	Table 26.11-1 Const	= 9.500	Zg:	Table 26.11-1 Const	= 900.000 ft
At:	Table 26.11-1 Const	= 0.105	Bt:	Table 26.11-1 Const	= 1.000
Am:	Table 26.11-1 Const	= 0.154	Bm:	Table 26.11-1 Const	= 0.650
C:	Table 26.11-1 Const	= 0.200	Eps:	Table 26.11-1 Const	= 0.200

Overhang Inputs:

Std	= Overhangs on all sides are the same	= True
OHType	= Type of Roof Wall Intersections	= Sofit
OH	= Overhang of Roof Beyond Wall	= 2.000 ft

Main Wind Force Resisting System (MWFRS) Calculations per Ch 27 Part 1:

h	= Mean Roof Height above grade	= 12.458 ft
Kh	= Z < 15 ft [4.572 m]--> (2.01 * (15/zg)^(2/Alpha) {Table 26.10-1}	= 0.849
Kzt	= Topographic Factor is 1 since no Topographic feature specified	= 1.000
Kd	= Wind Directionality Factor per Table 26.6-1	= 0.85
Zg	= Elevation above Sea Level	= 0.000 ft
Ke	= Ground Elevation Factor: Ke = e^-(0.0000362*Zg) {Table 26.9-1}	= 1.000
GCPi	= Ref Table 26.13-1 for Enclosed Building	= +/-0.18
RA	= Roof Area	= 2701.43 sq ft
LF	= Load Factor based upon ASD Design	= 0.60
qh	= (0.00256 * Kh * Kzt * Kd * Ke * V^2) * LF	= 33.94 psf
qin	= For Negative Internal Pressure of Enclosed Building use qh*LF	= 33.94 psf
qip	= For Positive Internal Pressure of Enclosed Building use qh*LF	= 33.94 psf

Gust Factor Calculation:

Gust Factor Category I Rigid Structures - Simplified Method		
G1	= For Rigid Structures (Nat. Freq.>1 Hz) use 0.85	= 0.85
Gust Factor Category II Rigid Structures - Complete Analysis		
Zm	= Max(0.6 * Ht, Zmin)	= 15.000 ft
Izm	= Cc * (33 / Zm) ^ 0.167	= 0.228
Lzm	= L * (Zm / 33) ^ Eps	= 427.057
Q	= (1 / (1 + 0.63 * ((B + Ht) / Lzm)^0.63))^0.5	= 0.930

G2	= 0.925*((1+0.7*Izm*3.4*Q)/(1+0.7*3.4*Izm))	
Gust Factor Used in Analysis		= 0.888
G	= Lessor Of G1 Or G2	
		= 0.850

MWFRS Wind Normal to Ridge (Ref Fig 27.3-1)

h	= Mean Roof Height Of Building	
RHt	= Ridge Height Of Roof	= 12.458 ft
B	= Horizontal Dimension Of Building Normal To Wind Direction	= 16.417 ft
L	= Horizontal Dimension Of building Parallel To Wind Direction	= 71.000 ft
L/B	= Ratio Of L/B used For Cp determination	= 34.000 ft
h/L	= Ratio Of h/L used For Cp determination	= 0.479
Slope	= Slope of Roof	= 0.366
OH_Top_+Y	= Overhang Top +Y (Leeward)	= 22.62 Deg
OH_Top_-Y	= Overhang Top Windward Edge	= -0.6, -0.6
OH_X	= Overhang Top +/-X Coeff (0 to h/2) (0.000 ft to 2.000 ft)	= 0.18, -0.29
OH_X	= Overhang Top +/-X Coeff (0 to h/2) (2.000 ft to 6.229 ft)	= -0.18, -0.9
OH_X	= Overhang Top +/-X Coeff (h/2 to h) (6.229 ft to 12.458 ft)	= -0.18, -0.9
OH_X	= Overhang Top +/-X Coeff (h to 2h) (12.458 ft to 19.000 ft)	= -0.18, -0.9
OH_X	= Overhang Top +/-X Coeff (h to 2h) (19.000 ft to 24.917 ft)	= -0.18, -0.5
OH_X	= Overhang Top +/-X Coeff (>2h) (>24.917 ft)	= -0.18, -0.5
OH_X	= Overhang Top +/-X Coeff (>2h) (>36.000 ft)	= -0.18, -0.3
Roof_LW	= Roof (Leeward)	= -0.18, -0.3
Roof_WW	= Roof (Windward)	= -0.6, -0.6
Roof_X	= Roof +/-X Coeff (0 to h/2) (2.000 ft to 6.229 ft)	= 0.18, -0.29
Roof_X	= Roof +/-X Coeff (h/2 to h) (6.229 ft to 12.458 ft)	= -0.18, -0.9
Roof_X	= Roof +/-X Coeff (h to 2h) (12.458 ft to 24.917 ft)	= -0.18, -0.9
Roof_X	= Roof +/-X Coeff (>2h) (>24.917 ft)	= -0.18, -0.5
Sofit_-Y	= Overhang Sofit -Y	= -0.18, -0.3
		= 0.8, 0.8

Cp_WW	= Windward Wall Coefficient (All L/B Values)	= 0.80
Cp_LW	= Leward Wall Coefficient using L/B	= -0.50
Cp_SW	= Side Wall Coefficient (All L/B values)	= -0.70
GCpn_WW	= Parapet Combined Net Pressure Coefficient (Windward Parapet)	= 1.50
GCpn_LW	= Parapet Combined Net Pressure Coefficient (Leeward Parapet)	= -1.00

Wall Wind Pressures based On Positive Internal Pressure (+GCPi) - Normal to Ridge
All wind pressures include a load factor of 0.6

Elev ft	Kz	Kzt	qz psf	GCPi	Windward Press psf	Leeward Press psf	Side Press psf	Total Press psf	Minimum Pressure* psf
8.50	0.849	1.000	33.94	0.18	16.97	-20.53	-26.30	37.51	9.60

Wall Wind Pressures based on Negative Internal Pressure (-GCPi) - Normal to Ridge
All wind pressures include a load factor of 0.6

Elev ft	Kz	Kzt	qz psf	GCPi	Windward Press psf	Leeward Press psf	Side Press psf	Total Press psf	Minimum Pressure* psf
8.50	0.849	1.000	33.94	-0.18	29.19	-8.32	-14.09	37.51	9.60

Notes Wall Pressures:

Kz	= Velocity Press Exp Coeff	Kzt	= Topographical Factor
qz	= 0.00256*Kz*Kzt*Kd*V^2	GCPi	= Internal Press Coefficient
Side	= qh * G * Cp_SW - qip * +GCPi	Windward	= qz * G * Cp_WW - qip * +GCPi
Leeward	= qh * G * Cp_LW - qip * +GCPi	Total	= Windward Press - Leeward Press

* Minimum Pressure: Para 27.1.5 no less than 9.60 psf (Incl LF) applied to Walls
\+ Pressures Acting TOWARD Surface - Pressures Acting AWAY from Surface

Roof Wind Pressures for Positive & Negative Internal Pressure (+/- GCPi) - Normal to Ridge
All wind pressures include a load factor of 0.6

Roof Var	Start Dist ft	End Dist ft	Cp_min	Cp_max	GCPi	Pressure Pn_min* psf	Pressure Pp_min* psf	Pressure Pn_max psf	Pressure Pp_max psf
OH_Top_+Y	N/A	N/A	-0.600	-0.600	0.180	-11.20	-23.42	-11.20	-23.42
OH_Top_+Y	N/A	N/A	-0.600	-0.600	0.180	-11.20	-23.42	-11.20	-23.42

OH_Top_-Y	N/A	N/A	0.180	-0.290	0.180	11.30	-0.92	-2.26	-14.48
OH_Top_-Y	N/A	N/A	0.180	-0.290	0.180	11.30	-0.92	-2.26	-14.48
OH_X (+X)	0.000	2.000	-0.180	-0.900	0.180	0.92	-11.30	-19.86	-32.07
OH_X (-X)	0.000	2.000	-0.180	-0.900	0.180	0.92	-11.30	-19.86	-32.07
OH_X (+X)	2.000	6.229	-0.180	-0.900	0.180	0.92	-11.30	-19.86	-32.07
OH_X (-X)	2.000	6.229	-0.180	-0.900	0.180	0.92	-11.30	-19.86	-32.07
OH_X (+X)	6.229	12.458	-0.180	-0.900	0.180	0.92	-11.30	-19.86	-32.07
OH_X (-X)	6.229	12.458	-0.180	-0.900	0.180	0.92	-11.30	-19.86	-32.07
OH_X (+X)	12.458	19.000	-0.180	-0.500	0.180	0.92	-11.30	-8.32	-20.53
OH_X (-X)	12.458	19.000	-0.180	-0.500	0.180	0.92	-11.30	-8.32	-20.53
OH_X (+X)	19.000	24.917	-0.180	-0.500	0.180	0.92	-11.30	-8.32	-20.53
OH_X (-X)	19.000	24.917	-0.180	-0.500	0.180	0.92	-11.30	-8.32	-20.53
OH_X (+X)	24.917	36.000	-0.180	-0.300	0.180	0.92	-11.30	-2.55	-14.76
OH_X (-X)	24.917	36.000	-0.180	-0.300	0.180	0.92	-11.30	-2.55	-14.76
OH_X (+X)	36.000	38.000	-0.180	-0.300	0.180	0.92	-11.30	-2.55	-14.76
OH_X (-X)	36.000	38.000	-0.180	-0.300	0.180	0.92	-11.30	-2.55	-14.76
Roof_LW	N/A	N/A	-0.600	-0.600	0.180	-11.20	-23.42	-11.20	-23.42
Roof_WW	N/A	N/A	0.180	-0.290	0.180	11.30	-0.92	-2.26	-14.48
Roof_X (+X)	2.000	6.229	-0.180	-0.900	0.180	0.92	-11.30	-19.86	-32.07
Roof_X (-X)	2.000	6.229	-0.180	-0.900	0.180	0.92	-11.30	-19.86	-32.07
Roof_X (+X)	6.229	12.458	-0.180	-0.900	0.180	0.92	-11.30	-19.86	-32.07
Roof_X (-X)	6.229	12.458	-0.180	-0.900	0.180	0.92	-11.30	-19.86	-32.07
Roof_X (+X)	12.458	24.917	-0.180	-0.500	0.180	0.92	-11.30	-8.32	-20.53
Roof_X (-X)	12.458	24.917	-0.180	-0.500	0.180	0.92	-11.30	-8.32	-20.53
Roof_X (+X)	24.917	36.000	-0.180	-0.300	0.180	0.92	-11.30	-2.55	-14.76
Roof_X (-X)	24.917	36.000	-0.180	-0.300	0.180	0.92	-11.30	-2.55	-14.76
Sofit_-Y	N/A	N/A	0.800	0.800	0.180	29.19	16.97	29.19	16.97

Notes Roof Pressures:
Start Dist = Start Dist from Windward Edge End Dist = End Dist from Windward Edge
Cp_Max = Largest Coefficient Magnitude Cp_Min = Smallest Coefficient Magnitude
Pp_max = qh*G*Cp_max - qip*(+GCPi) Pn_max = qh*G*Cp_max - qin*(-GCpi)
Pp_min* = qh*G*Cp_min - qip*(+GCPi) Pn_min* = qh*G*Cp_min - qin*(-GCPi)
OH = Overhang X = Dir along Ridge Y = Dir Perpendcular to Ridge Z = Vertical
* The smaller uplift pressures due to Cp_Min can become critical when wind is combined with roof live load or snow load; load combinations are given in ASCE 7
+ Pressures Acting TOWARD Surface - Pressures Acting AWAY from Surface

MWFRS Wind Parallel to Ridge (Ref Fig 27.3-1)

h	= Mean Roof Height Of Building	= 12.458 ft
RHt	= Ridge Height Of Roof	= 16.417 ft
B	= Horizontal Dimension Of Building Normal To Wind Direction	= 34.000 ft
L	= Horizontal Dimension Of building Parallel To Wind Direction	= 71.000 ft
L/B	= Ratio Of L/B used For Cp determination	= 2.088
h/L	= Ratio Of h/L used For Cp determination	= 0.175
Slope	= Slope of Roof	= 22.62 Deg
Hip_End	= Hipped End Coeff (0 to h/2) (2.000 ft to 6.229 ft)	= -0.18, -0.9
Hip_End	= Hipped End Coeff (h/2 to h) (6.229 ft to 12.458 ft)	= -0.18, -0.9
Hip_End	= Hipped End Coeff (h to 2h) (12.458 ft to 24.917 ft)	= -0.18, -0.5
Hip_End	= Hipped End Coeff (>2h) (>24.917 ft)	= -0.18, -0.3
Hip_End	= Hipped End Coeff (>2h) (>39.500 ft)	= -0.18, -0.3
OH_Bot	= Sofit (Windward Face Only)	= 0.8, 0.8
OH_Top	= Overhang Top Coeff (0 to h/2) (0.000 ft to 2.000 ft)	= -0.18, -0.9
OH_Top	= Overhang Top Coeff (0 to h/2) (2.000 ft to 6.229 ft)	= -0.18, -0.9
OH_Top	= Overhang Top Coeff (h/2 to h) (6.229 ft to 12.458 ft)	= -0.18, -0.9
OH_Top	= Overhang Top Coeff (h to 2h) (12.458 ft to 24.917 ft)	= -0.18, -0.5
OH_Top	= Overhang Top Coeff (>2h) (>24.917 ft)	= -0.18, -0.3
OH_Top	= Overhang Top Coeff (>2h) (>37.500 ft)	= -0.18, -0.3
OH_Top	= Overhang Top Coeff (>2h) (>73.000 ft)	= -0.18, -0.3
Roof	= Roof Coeff (0 to h/2) (2.000 ft to 6.229 ft)	= -0.18, -0.9
Roof	= Roof Coeff (h/2 to h) (6.229 ft to 12.458 ft)	= -0.18, -0.9
Roof	= Roof Coeff (h to 2h) (12.458 ft to 24.917 ft)	= -0.18, -0.5
Roof	= Roof Coeff (>2h) (>24.917 ft)	= -0.18, -0.3
Cp_WW	= Windward Wall Coefficient (All L/B Values)	= 0.80
Cp_LW	= Leward Wall Coefficient using L/B	= -0.30
Cp_SW	= Side Wall Coefficient (All L/B values)	= -0.70
GCpn_WW	= Parapet Combined Net Pressure Coefficient (Windward Parapet)	= 1.50
GCpn_LW	= Parapet Combined Net Pressure Coefficient (Leeward Parapet)	= -1.00

Wall Wind Pressures based On Positive Internal Pressure (+GCPi) - Parallel to Ridge

All wind pressures include a load factor of 0.6

Elev ft	Kz	Kzt	qz psf	GCPi	Windward Press psf	Leeward Press psf	Side Press psf	Total Press psf	Minimum Pressure* psf
8.50	0.849	1.000	33.94	0.18	16.97	-14.64	-26.30	31.61	9.60

Wall Wind Pressures based on Negative Internal Pressure (-GCPi) - Parallel to Ridge

All wind pressures include a load factor of 0.6

Elev ft	Kz	Kzt	qz psf	GCPi	Windward Press psf	Leeward Press psf	Side Press psf	Total Press psf	Minimum Pressure* psf
8.50	0.849	1.000	33.94	-0.18	29.19	-2.42	-14.09	31.61	9.60

Notes Wall Pressures:
Kz = Velocity Press Exp Coeff
qz = 0.00256*Kz*Kzt*Kd*V^2
Side = qh * G * Cp_SW - qip * +GCPi
Leeward = qh * G * Cp_LW - qip * +GCPi
Kzt = Topographical Factor
GCPi = Internal Press Coefficient
Windward = qz * G * Cp_WW - qip * +GCPi
Total = Windward Press - Leeward Press
* Minimum Pressure: Para 27.1.5 no less than 9.60 psf (Incl LF) applied to Walls
+ Pressures Acting TOWARD Surface
- Pressures Acting AWAY from Surface

Roof Wind Pressures for Positive & Negative Internal Pressure (+/- GCPi) - Parallel to Ridge

All wind pressures include a load factor of 0.6

Roof Var	Start Dist ft	End Dist ft	Cp_min	Cp_max	GCPi	Pressure Pn_min* psf	Pressure Pp_min* psf	Pressure Pn_max psf	Pressure Pp_max psf
Hip_End (-X)	2.000	6.229	-0.180	-0.900	0.180	0.92	-11.30	-19.86	-32.07
Hip_End (-X)	6.229	12.458	-0.180	-0.900	0.180	0.92	-11.30	-19.86	-32.07
Hip_End (-X)	12.458	24.917	-0.180	-0.500	0.180	0.92	-11.30	-8.32	-20.53
Hip_End (-X)	24.917	35.500	-0.180	-0.300	0.180	0.92	-11.30	-2.55	-14.76
Hip_End (+X)	39.500	73.000	-0.180	-0.300	0.180	0.92	-11.30	-2.55	-14.76
OH_Bot	N/A	N/A	0.800	0.800	0.180	29.19	16.97	29.19	16.97
OH_Top (-X)	0.000	2.000	-0.180	-0.900	0.180	0.92	-11.30	-19.86	-32.07
OH_Top (-X)	0.000	2.000	-0.180	-0.900	0.180	0.92	-11.30	-19.86	-32.07
OH_Top (-X)	0.000	2.000	-0.180	-0.900	0.180	0.92	-11.30	-19.86	-32.07
OH_Top (-X)	0.000	2.000	-0.180	-0.900	0.180	0.92	-11.30	-19.86	-32.07
OH_Top (+Y)	0.000	2.000	-0.180	-0.900	0.180	0.92	-11.30	-19.86	-32.07
OH_Top (-Y)	0.000	2.000	-0.180	-0.900	0.180	0.92	-11.30	-19.86	-32.07
OH_Top (+Y)	2.000	6.229	-0.180	-0.900	0.180	0.92	-11.30	-19.86	-32.07
OH_Top (-Y)	2.000	6.229	-0.180	-0.900	0.180	0.92	-11.30	-19.86	-32.07
OH_Top (+Y)	6.229	12.458	-0.180	-0.900	0.180	0.92	-11.30	-19.86	-32.07
OH_Top (-Y)	6.229	12.458	-0.180	-0.900	0.180	0.92	-11.30	-19.86	-32.07
OH_Top (+Y)	12.458	24.917	-0.180	-0.500	0.180	0.92	-11.30	-8.32	-20.53
OH_Top (-Y)	12.458	24.917	-0.180	-0.500	0.180	0.92	-11.30	-8.32	-20.53
OH_Top (+Y)	24.917	37.500	-0.180	-0.300	0.180	0.92	-11.30	-2.55	-14.76
OH_Top (-Y)	24.917	37.500	-0.180	-0.300	0.180	0.92	-11.30	-2.55	-14.76
OH_Top (+Y)	37.500	73.000	-0.180	-0.300	0.180	0.92	-11.30	-2.55	-14.76
OH_Top (-Y)	37.500	73.000	-0.180	-0.300	0.180	0.92	-11.30	-2.55	-14.76
OH_Top (+X)	73.000	75.000	-0.180	-0.300	0.180	0.92	-11.30	-2.55	-14.76
OH_Top (+X)	73.000	75.000	-0.180	-0.300	0.180	0.92	-11.30	-2.55	-14.76
OH_Top (+X)	73.000	75.000	-0.180	-0.300	0.180	0.92	-11.30	-2.55	-14.76
OH_Top (+X)	73.000	75.000	-0.180	-0.300	0.180	0.92	-11.30	-2.55	-14.76
OH_Top (+Y)	73.000	75.000	-0.180	-0.300	0.180	0.92	-11.30	-2.55	-14.76
OH_Top (-Y)	73.000	75.000	-0.180	-0.300	0.180	0.92	-11.30	-2.55	-14.76
Roof (+Y)	2.000	6.229	-0.180	-0.900	0.180	0.92	-11.30	-19.86	-32.07
Roof (-Y)	2.000	6.229	-0.180	-0.900	0.180	0.92	-11.30	-19.86	-32.07
Roof (+Y)	6.229	12.458	-0.180	-0.900	0.180	0.92	-11.30	-19.86	-32.07
Roof (-Y)	6.229	12.458	-0.180	-0.900	0.180	0.92	-11.30	-19.86	-32.07
Roof (+Y)	12.458	24.917	-0.180	-0.500	0.180	0.92	-11.30	-8.32	-20.53
Roof (-Y)	12.458	24.917	-0.180	-0.500	0.180	0.92	-11.30	-8.32	-20.53
Roof (+Y)	24.917	73.000	-0.180	-0.300	0.180	0.92	-11.30	-2.55	-14.76
Roof (-Y)	24.917	73.000	-0.180	-0.300	0.180	0.92	-11.30	-2.55	-14.76

Notes Roof Pressures:

Start Dist = Start Dist from Windward Edge End Dist = End Dist from Windward Edge
Cp_Max = Largest Coefficient Magnitude Cp_Min = Smallest Coefficient Magnitude
Pp_max = qh*G*Cp_max - qip*(+GCPi) Pn_max = qh*G*Cp_max - qin*(-GCpi)
Pp_min* = qh*G*Cp_min - qip*(+GCPi) Pn_min* = qh*G*Cp_min - qin*(-GCPi)
OH = Overhang X = Dir along Ridge Y = Dir Perpendcular to Ridge Z = Vertical
* The smaller uplift pressures due to Cp_Min can become critical when wind is combined with roof live load or snow load; load combinations are given in ASCE 7
+ Pressures Acting TOWARD Surface - Pressures Acting AWAY from Surface

Components and Cladding (C&C) Calculations per Ch 30 Part 1:

h/W	= Ratio of mean roof height to building width	= 0.366
h/L	= Ratio of mean roof height to building length	= 0.175
h	= Mean Roof Height above grade	= 12.458 ft
Kh	= Z < 15 ft [4.572 m]--> (2.01 * (15/zg)^(2/Alpha) {Table 26.10-1}	= 0.849
Kzt	= Topographic Factor is 1 since no Topographic feature specified	= 1.000
Kd	= Wind Directionality Factor per Table 26.6-1	= 0.85
GCPi	= Ref Table 26.13-1 for Enclosed Building	= +/-0.18
LF	= Load Factor based upon ASD Design	= 0.60
qh	= (0.00256 * Kh * Kzt * Kd * Ke * V^2) * LF	= 33.94 psf
LHD	= Least Horizontal Dimension: Min(B, L)	= 34.000 ft
a1	= Min(0.1 * LHD, 0.4 * h)	= 3.400 ft
a	= Max(a1, 0.04 * LHD, 3 ft [0.9 m])	= 3.400 ft
h/B	= Ratio of mean roof height to least hor dim: h / B	= 0.366

Wind Pressures for C&C Ch 30 Pt 1
All wind pressures include a load factor of 0.6

Description	Zone	Width ft	Span ft	Area sq ft	1/3 Rule	Ref Fig	GCp Max	GCp Min	p Max psf	p Min psf
roof	1	2.000	36.000	432.00	Yes	30.3-2G	0.300	-0.800	16.29	-33.26
roof	2e	2.000	36.000	432.00	Yes	30.3-2G	0.300	-1.000	16.29	-40.05
roof	2r	2.000	36.000	432.00	Yes	30.3-2G	0.300	-1.000	16.29	-40.05
wlf	4	1.000	8.500	24.08	Yes	30.3-1	0.933	-1.033	37.76	-41.16
wlf	5	1.000	8.500	24.08	Yes	30.3-1	0.933	-1.265	37.76	-49.05

Area = Span Length x Effective Width
1/3 Rule = Effective width need not be less than 1/3 of the span length
GCp = External Pressure Coefficients taken from Figures 30.3-1 through 30.3-7
p = Wind Pressure: qh*(GCp - GCpi) [Eqn 30.3-1]*
* Per Para 30.2.2 the Minimum Pressure for C&C is 9.60 psf [0.460 kPa] {Includes LF}

Components and Cladding (C&C) Overhang Calculations per Section 30.9:

h	= Mean Roof Height above grade	= 12.458 ft
Kh	= Z < 15 ft [4.572 m]--> (2.01 * (15/zg)^(2/Alpha) {Table 26.10-1}	= 0.849
Kzt	= Topographic Factor is 1 since no Topographic feature specified	= 1.000
Kd	= Wind Directionality Factor per Table 26.6-1	= 0.85
GCPi	= Ref Table 26.13-1 for Enclosed Building	= +/-0.18
LF	= Load Factor based upon ASD Design	= 0.60
qh	= (0.00256 * Kh * Kzt * Kd * Ke * V^2) * LF	= 33.94 psf

Wind Pressures for C&C per Section 30.9 & Figure 30.3-2
All wind pressures include a load factor of 0.6

Description	Zone	Width ft	Span Length ft	Area sq ft	1/3 Rule	Ref Fig	GCpi +/-	GCp Max	GCp Min	p Max psf	p Min psf
roof	2e_OHS	2.000	2.000	4.00	No	30.3-2G	0.18	0.000	-2.500	9.60	-90.96

#_OHS = Zone # on Overhang w/ Sofit w/ Buildings Internal Pressure (GCPi = +/-0.18)
Area = Span Length x Effective Width
1/3 Rule = Effective width need not be less than 1/3 of the span length
p = Wind Pressure: qh*(GCp - GCpi)*LF [Eqn 30.3-1]*
* Per Para 30.2.2 the Minimum Pressure for C&C is 9.60 psf [0.460 kPa] {Includes LF}
Values of GCp for overhangs include contributions from both upper and lower surfaces.

MecaWind v2403

Software Developer: Meca Enterprises Inc., www.meca.biz, Copyright © 2020

Calculations Prepared by:
True
Address
City, State,
Date: Mar 13, 2022
Designer: 0

Calculations Prepared For:
Client: 0
Project #: 0
Location: 0

File Location : H:\0-ALFONSO\AMBER PRIVAL\OPEN.wnd

Basic Wind Parameters

Wind Load Standard	= ASCE 7-16	Exposure Category	= C
Wind Design Speed	= 175.0 mph	Risk Category	= II
Structure Type	= Building	Building Type	= Partially Enclosed

General Wind Settings

Incl_LF	= Include ASD Load Factor of 0.6 in Pressures	= True
DynType	= Dynamic Type of Structure	= Rigid
Zg	= Altitude (Ground Elevation) above Sea Level	= 0.000 ft
Bdist	= Base Elevation of Structure	= 0.000 ft
SDB	= Simple Diaphragm Building	= True
zi	= Level of highest opening in building or zero to use h	= 0.0 ft
MWFRSType	= MWFRS Method Selected	= Ch 27 Pt 1

Topographic Factor per Fig 26.8-1

Topo	= Topographic Feature	= None
Kzt	= Topographic Factor	= 1.000

Building Inputs

RoofType:	Building Roof Type	= Hipped	W :	Width Perp to Ridge	= 34.000 ft
L :	Length Along Ridge	= 71.000 ft	EHt :	Eave Height	= 8.500 ft
Hip :	Ridge Hipped Length	= 4.000 ft	RE :	Roof Entry Method	= Slope
Slope :	Slope of Roof	= 5.0 :12	Theta :	Roof Slope	= 22.62 Deg
Par :	Is there a Parapet	= False			
Aog :	Tot Area of Openings	= 0.00 sq ft	Vi :	Unpart Int Volume	= 0.00 ft^3

Exposure Constants per Table 26.11-1:

Alpha:	Table 26.11-1 Const	= 9.500	Zg:	Table 26.11-1 Const	= 900.000 ft
At:	Table 26.11-1 Const	= 0.105	Bt:	Table 26.11-1 Const	= 1.000
Am:	Table 26.11-1 Const	= 0.154	Bm:	Table 26.11-1 Const	= 0.650
C:	Table 26.11-1 Const	= 0.200	Eps:	Table 26.11-1 Const	= 0.200

Overhang Inputs:

Std	= Overhangs on all sides are the same	= True
OHType	= Type of Roof Wall Intersections	= Sofit
OH	= Overhang of Roof Beyond Wall	= 2.000 ft

Main Wind Force Resisting System (MWFRS) Calculations per Ch 27 Part 1:

h	= Mean Roof Height above grade	= 12.458 ft
Kh	= Z < 15 ft [4.572 m]--> (2.01 * (15/zg)^(2/Alpha) {Table 26.10-1}	= 0.849
Kzt	= Topographic Factor is 1 since no Topographic feature specified	= 1.000
Kd	= Wind Directionality Factor per Table 26.6-1	= 0.85
Zg	= Elevation above Sea Level	= 0.000 ft
Ke	= Ground Elevation Factor: Ke = e^-(0.0000362*Zg) {Table 26.9-1}	= 1.000
Ri	= Reduction Factor for Partially Enclosed Large Volume Buildings	= 1.000
GCPi	= Ref Table 26.13-1 for Partially Enclosed Building: 0.55*Ri	= +/-0.55
RA	= Roof Area	= 2701.43 sq ft
LF	= Load Factor based upon ASD Design	= 0.60
qh	= (0.00256 * Kh * Kzt * Kd * Ke * V^2) * LF	= 33.94 psf
qin	= For Negative Internal Pressure of Partially Encl Bldg use qh*LF	= 33.94 psf
qip	= For Positive Internal Pressure no zi entered so use qh*LF	= 33.94 psf

Gust Factor Calculation:

Gust Factor Category I Rigid Structures - Simplified Method		
G1	= For Rigid Structures (Nat. Freq.>1 Hz) use 0.85	= 0.85
Gust Factor Category II Rigid Structures - Complete Analysis		
Zm	= Max(0.6 * Ht, Zmin)	= 15.000 ft
Izm	= Cc * (33 / Zm) ^ 0.167	= 0.228
Lzm	= L * (Zm / 33) ^ Eps	= 427.057
Q	= (1 / (1 + 0.63 * ((B + Ht) / Lzm)^0.63))^0.5	= 0.930
G2	= 0.925*((1+0.7*Izm*3.4*Q)/(1+0.7*3.4*Izm))	= 0.888
Gust Factor Used in Analysis		
G	= Lessor Of G1 Or G2	= 0.850

MWFRS Wind Normal to Ridge (Ref Fig 27.3-1)

h	= Mean Roof Height Of Building	= 12.458 ft
RHt	= Ridge Height Of Roof	= 16.417 ft
B	= Horizontal Dimension Of Building Normal To Wind Direction	= 71.000 ft
L	= Horizontal Dimension Of building Parallel To Wind Direction	= 34.000 ft
L/B	= Ratio Of L/B used For Cp determination	= 0.479
h/L	= Ratio Of h/L used For Cp determination	= 0.366
Slope	= Slope of Roof	= 22.62 Deg
OH_Top_+Y	= Overhang Top +Y (Leeward)	= -0.6, -0.6
OH_Top_-Y	= Overhang Top Windward Edge	= 0.18, -0.29
OH_X	= Overhang Top +/-X Coeff (0 to h/2) (0.000 ft to 2.000 ft)	= -0.18, -0.9
OH_X	= Overhang Top +/-X Coeff (0 to h/2) (2.000 ft to 6.229 ft)	= -0.18, -0.9
OH_X	= Overhang Top +/-X Coeff (h/2 to h) (6.229 ft to 12.458 ft)	= -0.18, -0.9
OH_X	= Overhang Top +/-X Coeff (h to 2h) (12.458 ft to 19.000 ft)	= -0.18, -0.5
OH_X	= Overhang Top +/-X Coeff (h to 2h) (19.000 ft to 24.917 ft)	= -0.18, -0.5
OH_X	= Overhang Top +/-X Coeff (>2h) (>24.917 ft)	= -0.18, -0.3
OH_X	= Overhang Top +/-X Coeff (>2h) (>36.000 ft)	= -0.18, -0.3
Roof_LW	= Roof (Leeward)	= -0.6, -0.6
Roof_WW	= Roof (Windward)	= 0.18, -0.29
Roof_X	= Roof +/-X Coeff (0 to h/2) (2.000 ft to 6.229 ft)	= -0.18, -0.9
Roof_X	= Roof +/-X Coeff (h/2 to h) (6.229 ft to 12.458 ft)	= -0.18, -0.9
Roof_X	= Roof +/-X Coeff (h to 2h) (12.458 ft to 24.917 ft)	= -0.18, -0.5
Roof_X	= Roof +/-X Coeff (>2h) (>24.917 ft)	= -0.18, -0.3
Sofit_-Y	= Overhang Sofit -Y	= 0.8, 0.8
Cp_WW	= Windward Wall Coefficient (All L/B Values)	= 0.80
Cp_LW	= Leward Wall Coefficient using L/B	= -0.50
Cp_SW	= Side Wall Coefficient (All L/B values)	= -0.70
GCpn_WW	= Parapet Combined Net Pressure Coefficient (Windward Parapet)	= 1.50
GCpn_LW	= Parapet Combined Net Pressure Coefficient (Leeward Parapet)	= -1.00

Wall Wind Pressures based On Positive Internal Pressure (+GCPi) - Normal to Ridge
All wind pressures include a load factor of 0.6

Elev ft	Kz	Kzt	qz psf	GCPi	Windward Press psf	Leeward Press psf	Side Press psf	Total Press psf	Minimum Pressure* psf
8.50	0.849	1.000	33.94	0.55	4.41	-33.09	-38.86	37.51	9.60

Wall Wind Pressures based on Negative Internal Pressure (-GCPi) - Normal to Ridge
All wind pressures include a load factor of 0.6

Elev ft	Kz	Kzt	qz psf	GCPi	Windward Press psf	Leeward Press psf	Side Press psf	Total Press psf	Minimum Pressure* psf
8.50	0.849	1.000	33.94	-0.55	41.75	4.24	-1.53	37.51	9.60

Notes Wall Pressures:

Kz	= Velocity Press Exp Coeff	Kzt	= Topographical Factor
qz	= 0.00256*Kz*Kzt*Kd*V^2	GCPi	= Internal Press Coefficient
Side	= qh * G * Cp_SW - qip * +GCPi	Windward	= qz * G * Cp_WW - qip * +GCPi
Leeward	= qh * G * Cp_LW - qip * +GCPi	Total	= Windward Press - Leeward Press

* Minimum Pressure: Para 27.1.5 no less than 9.60 psf (Incl LF) applied to Walls
\+ Pressures Acting TOWARD Surface - Pressures Acting AWAY from Surface

Roof Wind Pressures for Positive & Negative Internal Pressure (+/- GCPi) - Normal to Ridge
All wind pressures include a load factor of 0.6

Roof Var	Start Dist ft	End Dist ft	Cp_min	Cp_max	GCPi	Pressure Pn_min* psf	Pressure Pp_min* psf	Pressure Pn_max psf	Pressure Pp_max psf
OH_Top_+Y	N/A	N/A	-0.600	-0.600	0.550	1.36	-35.98	1.36	-35.98
OH_Top_+Y	N/A	N/A	-0.600	-0.600	0.550	1.36	-35.98	1.36	-35.98
OH_Top_-Y	N/A	N/A	0.180	-0.290	0.550	23.86	-13.47	10.30	-27.03
OH_Top_-Y	N/A	N/A	0.180	-0.290	0.550	23.86	-13.47	10.30	-27.03
OH_X (+X)	0.000	2.000	-0.180	-0.900	0.550	13.47	-23.86	-7.30	-44.63
OH_X (-X)	0.000	2.000	-0.180	-0.900	0.550	13.47	-23.86	-7.30	-44.63
OH_X (+X)	2.000	6.229	-0.180	-0.900	0.550	13.47	-23.86	-7.30	-44.63
OH_X (-X)	2.000	6.229	-0.180	-0.900	0.550	13.47	-23.86	-7.30	-44.63
OH_X (+X)	6.229	12.458	-0.180	-0.900	0.550	13.47	-23.86	-7.30	-44.63
OH_X (-X)	6.229	12.458	-0.180	-0.900	0.550	13.47	-23.86	-7.30	-44.63
OH_X (+X)	12.458	19.000	-0.180	-0.500	0.550	13.47	-23.86	4.24	-33.09
OH_X (-X)	12.458	19.000	-0.180	-0.500	0.550	13.47	-23.86	4.24	-33.09
OH_X (+X)	19.000	24.917	-0.180	-0.500	0.550	13.47	-23.86	4.24	-33.09
OH_X (-X)	19.000	24.917	-0.180	-0.500	0.550	13.47	-23.86	4.24	-33.09

OH_X (+X)	24.917	36.000	-0.180	-0.300	0.550	13.47	-23.86	10.01	-27.32
OH_X (-X)	24.917	36.000	-0.180	-0.300	0.550	13.47	-23.86	10.01	-27.32
OH_X (+X)	36.000	38.000	-0.180	-0.300	0.550	13.47	-23.86	10.01	-27.32
OH_X (-X)	36.000	38.000	-0.180	-0.300	0.550	13.47	-23.86	10.01	-27.32
Roof_LW	N/A	N/A	-0.600	-0.600	0.550	1.36	-35.98	1.36	-35.98
Roof_WW	N/A	N/A	0.180	-0.290	0.550	23.86	-13.47	10.30	-27.03
Roof_X (+X)	2.000	6.229	-0.180	-0.900	0.550	13.47	-23.86	-7.30	-44.63
Roof_X (-X)	2.000	6.229	-0.180	-0.900	0.550	13.47	-23.86	-7.30	-44.63
Roof_X (+X)	6.229	12.458	-0.180	-0.900	0.550	13.47	-23.86	-7.30	-44.63
Roof_X (-X)	6.229	12.458	-0.180	-0.900	0.550	13.47	-23.86	-7.30	-44.63
Roof_X (+X)	12.458	24.917	-0.180	-0.500	0.550	13.47	-23.86	4.24	-33.09
Roof_X (-X)	12.458	24.917	-0.180	-0.500	0.550	13.47	-23.86	4.24	-33.09
Roof_X (+X)	24.917	36.000	-0.180	-0.300	0.550	13.47	-23.86	10.01	-27.32
Roof_X (-X)	24.917	36.000	-0.180	-0.300	0.550	13.47	-23.86	10.01	-27.32
Sofit_-Y	N/A	N/A	0.800	0.800	0.550	41.75	4.41	41.75	4.41

Notes Roof Pressures:
Start Dist = Start Dist from Windward Edge End Dist = End Dist from Windward Edge
Cp_Max = Largest Coefficient Magnitude Cp_Min = Smallest Coefficient Magnitude
Pp_max = qh*G*Cp_max - qip*(+GCPi) Pn_max = qh*G*Cp_max - qin*(-GCpi)
Pp_min* = qh*G*Cp_min - qip*(+GCPi) Pn_min* = qh*G*Cp_min - qin*(-GCPi)
OH = Overhang X = Dir along Ridge Y = Dir Perpendcular to Ridge Z = Vertical
* The smaller uplift pressures due to Cp_Min can become critical when wind is combined with roof live load or snow load; load combinations are given in ASCE 7
+ Pressures Acting TOWARD Surface - Pressures Acting AWAY from Surface

MWFRS Wind Parallel to Ridge (Ref Fig 27.3-1)

h	= Mean Roof Height Of Building	= 12.458 ft
RHt	= Ridge Height Of Roof	= 16.417 ft
B	= Horizontal Dimension Of Building Normal To Wind Direction	= 34.000 ft
L	= Horizontal Dimension Of building Parallel To Wind Direction	= 71.000 ft
L/B	= Ratio Of L/B used For Cp determination	= 2.088
h/L	= Ratio Of h/L used For Cp determination	= 0.175
Slope	= Slope of Roof	= 22.62 Deg
Hip_End	= Hipped End Coeff (0 to h/2) (2.000 ft to 6.229 ft)	= -0.18, -0.9
Hip_End	= Hipped End Coeff (h/2 to h) (6.229 ft to 12.458 ft)	= -0.18, -0.9
Hip_End	= Hipped End Coeff (h to 2h) (12.458 ft to 24.917 ft)	= -0.18, -0.5
Hip_End	= Hipped End Coeff (>2h) (>24.917 ft)	= -0.18, -0.3
Hip_End	= Hipped End Coeff (>2h) (>39.500 ft)	= -0.18, -0.3
OH_Bot	= Sofit (Windward Face Only)	= 0.8, 0.8
OH_Top	= Overhang Top Coeff (0 to h/2) (0.000 ft to 2.000 ft)	= -0.18, -0.9
OH_Top	= Overhang Top Coeff (0 to h/2) (2.000 ft to 6.229 ft)	= -0.18, -0.9
OH_Top	= Overhang Top Coeff (h/2 to h) (6.229 ft to 12.458 ft)	= -0.18, -0.9
OH_Top	= Overhang Top Coeff (h to 2h) (12.458 ft to 24.917 ft)	= -0.18, -0.5
OH_Top	= Overhang Top Coeff (>2h) (>24.917 ft)	= -0.18, -0.3
OH_Top	= Overhang Top Coeff (>2h) (>37.500 ft)	= -0.18, -0.3
OH_Top	= Overhang Top Coeff (>2h) (>73.000 ft)	= -0.18, -0.3
Roof	= Roof Coeff (0 to h/2) (2.000 ft to 6.229 ft)	= -0.18, -0.9
Roof	= Roof Coeff (h/2 to h) (6.229 ft to 12.458 ft)	= -0.18, -0.9
Roof	= Roof Coeff (h to 2h) (12.458 ft to 24.917 ft)	= -0.18, -0.5
Roof	= Roof Coeff (>2h) (>24.917 ft)	= -0.18, -0.3
Cp_WW	= Windward Wall Coefficient (All L/B Values)	= 0.80
Cp_LW	= Leward Wall Coefficient using L/B	= -0.30
Cp_SW	= Side Wall Coefficient (All L/B values)	= -0.70
GCpn_WW	= Parapet Combined Net Pressure Coefficient (Windward Parapet)	= 1.50
GCpn_LW	= Parapet Combined Net Pressure Coefficient (Leeward Parapet)	= -1.00

Wall Wind Pressures based On Positive Internal Pressure (+GCPi) - Parallel to Ridge
All wind pressures include a load factor of 0.6

Elev ft	Kz	Kzt	qz psf	GCPi	Windward Press psf	Leeward Press psf	Side Press psf	Total Press psf	Minimum Pressure* psf
8.50	0.849	1.000	33.94	0.55	4.41	-27.20	-38.86	31.61	9.60

Wall Wind Pressures based on Negative Internal Pressure (-GCPi) - Parallel to Ridge
All wind pressures include a load factor of 0.6

Elev ft	Kz	Kzt	qz psf	GCPi	Windward Press psf	Leeward Press psf	Side Press psf	Total Press psf	Minimum Pressure* psf
8.50	0.849	1.000	33.94	-0.55	41.75	10.14	-1.53	31.61	9.60

Notes Wall Pressures:
Kz = Velocity Press Exp Coeff Kzt = Topographical Factor

qz = 0.00256*Kz*Kzt*Kd*V^2 GCPi = Internal Press Coefficient
Side = qh * G * Cp_SW - qip * +GCPi Windward = qz * G * Cp_WW - qip * +GCPi
Leeward = qh * G * Cp_LW - qip * +GCPi Total = Windward Press - Leeward Press
* Minimum Pressure: Para 27.1.5 no less than 9.60 psf (Incl LF) applied to Walls
+ Pressures Acting TOWARD Surface - Pressures Acting AWAY from Surface

Roof Wind Pressures for Positive & Negative Internal Pressure (+/- GCPi) - Parallel to Ridge
All wind pressures include a load factor of 0.6

Roof Var	Start Dist ft	End Dist ft	Cp_min	Cp_max	GCPi	Pressure Pn_min* psf	Pressure Pp_min* psf	Pressure Pn_max psf	Pressure Pp_max psf
Hip_End (-X)	2.000	6.229	-0.180	-0.900	0.550	13.47	-23.86	-7.30	-44.63
Hip_End (-X)	6.229	12.458	-0.180	-0.900	0.550	13.47	-23.86	-7.30	-44.63
Hip_End (-X)	12.458	24.917	-0.180	-0.500	0.550	13.47	-23.86	4.24	-33.09
Hip_End (-X)	24.917	35.500	-0.180	-0.300	0.550	13.47	-23.86	10.01	-27.32
Hip_End (+X)	39.500	73.000	-0.180	-0.300	0.550	13.47	-23.86	10.01	-27.32
OH_Bot	N/A	N/A	0.800	0.800	0.550	41.75	4.41	41.75	4.41
OH_Top (-X)	0.000	2.000	-0.180	-0.900	0.550	13.47	-23.86	-7.30	-44.63
OH_Top (-X)	0.000	2.000	-0.180	-0.900	0.550	13.47	-23.86	-7.30	-44.63
OH_Top (-X)	0.000	2.000	-0.180	-0.900	0.550	13.47	-23.86	-7.30	-44.63
OH_Top (-X)	0.000	2.000	-0.180	-0.900	0.550	13.47	-23.86	-7.30	-44.63
OH_Top (+Y)	0.000	2.000	-0.180	-0.900	0.550	13.47	-23.86	-7.30	-44.63
OH_Top (-Y)	0.000	2.000	-0.180	-0.900	0.550	13.47	-23.86	-7.30	-44.63
OH_Top (+Y)	2.000	6.229	-0.180	-0.900	0.550	13.47	-23.86	-7.30	-44.63
OH_Top (-Y)	2.000	6.229	-0.180	-0.900	0.550	13.47	-23.86	-7.30	-44.63
OH_Top (+Y)	6.229	12.458	-0.180	-0.900	0.550	13.47	-23.86	-7.30	-44.63
OH_Top (-Y)	6.229	12.458	-0.180	-0.900	0.550	13.47	-23.86	-7.30	-44.63
OH_Top (+Y)	12.458	24.917	-0.180	-0.500	0.550	13.47	-23.86	4.24	-33.09
OH_Top (-Y)	12.458	24.917	-0.180	-0.500	0.550	13.47	-23.86	4.24	-33.09
OH_Top (+Y)	24.917	37.500	-0.180	-0.300	0.550	13.47	-23.86	10.01	-27.32
OH_Top (-Y)	24.917	37.500	-0.180	-0.300	0.550	13.47	-23.86	10.01	-27.32
OH_Top (+Y)	37.500	73.000	-0.180	-0.300	0.550	13.47	-23.86	10.01	-27.32
OH_Top (-Y)	37.500	73.000	-0.180	-0.300	0.550	13.47	-23.86	10.01	-27.32
OH_Top (+X)	73.000	75.000	-0.180	-0.300	0.550	13.47	-23.86	10.01	-27.32
OH_Top (+X)	73.000	75.000	-0.180	-0.300	0.550	13.47	-23.86	10.01	-27.32
OH_Top (+X)	73.000	75.000	-0.180	-0.300	0.550	13.47	-23.86	10.01	-27.32
OH_Top (+X)	73.000	75.000	-0.180	-0.300	0.550	13.47	-23.86	10.01	-27.32
OH_Top (+Y)	73.000	75.000	-0.180	-0.300	0.550	13.47	-23.86	10.01	-27.32
OH_Top (-Y)	73.000	75.000	-0.180	-0.300	0.550	13.47	-23.86	10.01	-27.32
Roof (+Y)	2.000	6.229	-0.180	-0.900	0.550	13.47	-23.86	-7.30	-44.63
Roof (-Y)	2.000	6.229	-0.180	-0.900	0.550	13.47	-23.86	-7.30	-44.63
Roof (+Y)	6.229	12.458	-0.180	-0.900	0.550	13.47	-23.86	-7.30	-44.63
Roof (-Y)	6.229	12.458	-0.180	-0.900	0.550	13.47	-23.86	-7.30	-44.63
Roof (+Y)	12.458	24.917	-0.180	-0.500	0.550	13.47	-23.86	4.24	-33.09
Roof (-Y)	12.458	24.917	-0.180	-0.500	0.550	13.47	-23.86	4.24	-33.09
Roof (+Y)	24.917	73.000	-0.180	-0.300	0.550	13.47	-23.86	10.01	-27.32
Roof (-Y)	24.917	73.000	-0.180	-0.300	0.550	13.47	-23.86	10.01	-27.32

Notes Roof Pressures:
Start Dist = Start Dist from Windward Edge End Dist = End Dist from Windward Edge
Cp_Max = Largest Coefficient Magnitude Cp_Min = Smallest Coefficient Magnitude
Pp_max = qh*G*Cp_max - qip*(+GCPi) Pn_max = qh*G*Cp_max - qin*(-GCpi)
Pp_min* = qh*G*Cp_min - qip*(+GCPi) Pn_min* = qh*G*Cp_min - qin*(-GCPi)
OH = Overhang X = Dir along Ridge Y = Dir Perpendcular to Ridge Z = Vertical
* The smaller uplift pressures due to Cp_Min can become critical when wind is combined with roof live load or snow load; load combinations are given in ASCE 7
+ Pressures Acting TOWARD Surface - Pressures Acting AWAY from Surface

Components and Cladding (C&C) Calculations per Ch 30 Part 1:

h/W	= Ratio of mean roof height to building width	= 0.366
h/L	= Ratio of mean roof height to building length	= 0.175
h	= Mean Roof Height above grade	= 12.458 ft
Kh	= Z < 15 ft [4.572 m]--> (2.01 * (15/zg)^(2/Alpha) {Table 26.10-1}	= 0.849
Kzt	= Topographic Factor is 1 since no Topographic feature specified	= 1.000
Kd	= Wind Directionality Factor per Table 26.6-1	= 0.85
Ri	= Reduction Factor for Partially Enclosed Large Volume Buildings	= 1.000
GCPi	= Ref Table 26.13-1 for Partially Enclosed Building: 0.55*Ri	= +/-0.55
LF	= Load Factor based upon ASD Design	= 0.60
qh	= (0.00256 * Kh * Kzt * Kd * Ke * V^2) * LF	= 33.94 psf
LHD	= Least Horizontal Dimension: Min(B, L)	= 34.000 ft
a1	= Min(0.1 * LHD, 0.4 * h)	= 3.400 ft
a	= Max(a1, 0.04 * LHD, 3 ft [0.9 m])	= 3.400 ft
h/B	= Ratio of mean roof height to least hor dim: h / B	= 0.366

Wind Pressures for C&C Ch 30 Pt 1

All wind pressures include a load factor of 0.6

Description	Zone	Width ft	Span ft	Area sq ft	1/3 Rule	Ref Fig	GCp Max	GCp Min	p Max psf	p Min psf
roof	1	2.000	36.000	432.00	Yes	30.3-2G	0.300	-0.800	28.85	-45.82
roof	2e	2.000	36.000	432.00	Yes	30.3-2G	0.300	-1.000	28.85	-52.61
roof	2r	2.000	36.000	432.00	Yes	30.3-2G	0.300	-1.000	28.85	-52.61
wlf	4	1.000	8.500	24.08	Yes	30.3-1	0.933	-1.033	50.32	-53.72
wlf	5	1.000	8.500	24.08	Yes	30.3-1	0.933	-1.265	50.32	-61.61

Area = Span Length x Effective Width
1/3 Rule = Effective width need not be less than 1/3 of the span length
GCp = External Pressure Coefficients taken from Figures 30.3-1 through 30.3-7
p = Wind Pressure: qh*(GCp - GCpi) [Eqn 30.3-1]*
* Per Para 30.2.2 the Minimum Pressure for C&C is 9.60 psf [0.460 kPa] {Includes LF}

Components and Cladding (C&C) Overhang Calculations per Section 30.9:

h	= Mean Roof Height above grade	= 12.458 ft
Kh	= Z < 15 ft [4.572 m]--> (2.01 * (15/zg)^(2/Alpha) {Table 26.10-1}	= 0.849
Kzt	= Topographic Factor is 1 since no Topographic feature specified	= 1.000
Kd	= Wind Directionality Factor per Table 26.6-1	= 0.85
Ri	= Reduction Factor for Partially Enclosed Large Volume Buildings	= 1.000
GCPi	= Ref Table 26.13-1 for Partially Enclosed Building: 0.55*Ri	= +/-0.55
LF	= Load Factor based upon ASD Design	= 0.60
qh	= (0.00256 * Kh * Kzt * Kd * Ke * V^2) * LF	= 33.94 psf

Wind Pressures for C&C per Section 30.9 & Figure 30.3-2
All wind pressures include a load factor of 0.6

Description	Zone	Width ft	Span Length ft	Area sq ft	1/3 Rule	Ref Fig	GCpi +/-	GCp Max	GCp Min	p Max psf	p Min psf
roof	2e_OHS	2.000	2.000	4.00	No	30.3-2G	0.55	0.000	-2.500	9.60	-103.52

#_OHS = Zone # on Overhang w/ Sofit w/ Buildings Internal Pressure (GCPi = +/-0.55)
Area = Span Length x Effective Width
1/3 Rule = Effective width need not be less than 1/3 of the span length
p = Wind Pressure: qh*(GCp - GCpi)*LF [Eqn 30.3-1]*
* Per Para 30.2.2 the Minimum Pressure for C&C is 9.60 psf [0.460 kPa] {Includes LF}
Values of GCp for overhangs include contributions from both upper and lower surfaces.

GENERAL NOTES:

CONCRETE SHALL HAVE 3 000 PSI COMPRESSIVE STRENGTH AT 28 DAYS UNLESS OTHERWISE NOTED (U O N)
ALL REINFORCING STEEL SHALL BE DEFORMED BARS AND SHALL HAVE A MINIMUM YIELD STRENGTH OF 60 000 PSI GRADE 60 AND MEET ASTM A-615 SPECS
ALL STRUCTURAL STEEL SHALL HAVE A MINIMUM YIELD STRENGTH OF 36 000 PSI AND MEET ASTM A-36 SPECS
DROP TIE BEAM OVER DOORS EXTEND 8" PAST OPENING ON BOTH SIDES AND ADD 2 #5 BARS FOR EVERY ADDITIONAL 8" OF BEAM HEIGHT (2 ADDITIONAL BARS MIN)

FOUNDATIONS

SOIL STATEMENT:

THE SOIL AT THIS SITE HAS BEEN OBSERVED BY THE ARCHITECT OR ENGINEER TO BE COMPOSED OF SAND AND ROCKS AND CAN BE CONSIDERED TO HAVE AN ALLOWABLE MINIMUM DESIGN BEARING CAPACITY OF 2 000 P S F (SHOULD ANY OTHER CONDITIONS OR MATERIALS BE ENCOUNTERED IN THE PROCESS OF CONSTRUCTION THE ARCHITECT OR ENGINEER SHALL BE NOTIFIED BEFORE PROCEEDING WITH THE WORK)
ALL BUILDINGS SHALL HAVE PRE-CONSTRUCTION TREATMENT PROTECTION AGAINST SUBTERRANEAN TERMITES AS PER F B C 2020 / th EDITION A CERTIFICATE OF COMPLIANCE SHALL BE ISSUED TO THE BUILDING DEPARTMENT BY THE LICENSED PEST CONTROL COMPANY THAT CONTAINS THE FOLLOWING STATEMENTS * THE BUILDING HAS RECEIVED A COMPLETE TREATMENT FOR THE PREVENTION OF SUBTERRANEAN TERMITES TREATMENT IS IN ACCORDANCE WITH THE RULES AND LAWS ESTABLISHED BY THE FLORIDA DEPARTMENT OF AGRICULTURE AND CONSUMER SERVICES *
AT THE TIME OF CONSTRUCTION THE ARCHITECT OR ENGINEER SHALL SUBMIT TO THE BUILDING OFFICIAL A LETTER ATTESTING THAT THE SITE HAS BEEN OBSERVED AND THAT THE FOUNDATION CONDITIONS ARE SIMILAR TO THOSE UPON WHICH THE DESIGN IS BASED
SOIL AT THE BUILDING AREA SHALL BE VIBRE-ROLLED TO A MIN COMP ACTION OF 2 000 P S F AND MODIFIED PROCTOR DENSITY
CENTERLINE OF FOOTING IS CENTERLINE OF COLUMNS AND BEARING WALLS, UNLESS OTHER WISE NOTED (U O N)
ELEVATION OF TOP OF FOOTING SHALL BE 1' 0" BELOW THE FINISHED GRADE, U O N
PROVIDE BEND DOWELS AT ALL COLUMNS AND VERTICAL REINFORCEMENT SAME SIZE AND QUANTITY AS REINFORCEMENT

REINFORCING

MINIMUM CLEAR COVER FOR REBARS TO BE AS FOLLOWS
COLUMNS = 1-1/2" TO TIE FOOTINGS = 3" BEAMS = 1-1/2" TO TIE
PEDESTAL - 2" TO TIE SLAB ON FILL = 2" FROM TOP SLABS = 3/4"
ALL REINFORCING SHALL BE HELD SECURELY IN POSITION WITH STANDARD ACCESSORIES
SPLICES IN CONTINUOS TOP REBARS SHALL BE MADE AT MID SPAN, SPLICES IN CONTINUOS BOTTOM REBARS SHALL BE OVER SUPPORT(S)
SPLICES IN REINFORCING, WHERE PERMITTED SHALL BE AS FOLLOWS
COLUMN VERT BARS = 30 BAR DIA TEMPERATURE REBARS = 12" MIN
FOOTING DOWELS = 30 BAR DIA + 8" WELDED WIRE MESH = 6"
TENSION SPLICE = CLASS "C" ALL OTHERS = 30 BAR DIA
PROVIDE 2 #5 "S 60" LONG BEND BARS AT CORNERS OF BEAMS.

SLAB

4" FIBER STEALTH CONCRETE SLAB 3000 PSI

~~SLAB SHALL BE 2500 PSI CONCRETE (MIN), 4" THICK REINFORCED WITH 6"X 6"- 10/10 (GAUGE) WELDED WIRE MESH (W W M), ON WELL COMPACTED FILL~~
FILL MATERIAL SHALL BE CLEAN SAND AND ROCK COMPACTED TO 95% OF MAXIMUM DENSITY IN LIFTS NOT TO EXCEED 12" IN DEPTH
PLACE CONCRETE SLABS IN A CHECKERBOARD PATTERN, NO PANEL EXCEEDING 25 FEET OF LENGTH, OR 625 SF IN AREA, OR USE CONTROL JOINTS
ELEVATION TOP OF CONCRETE SLAB SHOWN THUSLY OR MATCH EXISTING ADJACENT FLOOR ELEVATION
WALLS, COLUMNS AND BEAMS, PENETRATING SLAB ON FILL, SHALL BE ISOLATED BY 1/2" PRE MOLDED JOINT FILLER, UNLESS OTHERWISE NOTED (U O N)
SLABS SHALL BE PLACED OVER 1 LAYER OF PLASTIC MEMBRANE, SUCH AS 6 MIL VISQUEEN, OR SIMILAR
SLABS ON FILL SHALL BE CURED CONTINUOUSLY FOR 5 DAYS

MASONRY

CONCRETE MASONRY UNITS (CMU), OR "BLOCKS", SHALL CONFORM TO ASTM C-90 SPECS
COMPRESSIVE STRENGTH OF MASONRY UNITS SHALL BE NOT LESS THAN F'M=1500 PSI
ALL BLOCK WALLS SHALL BE LAID IN A FULL BEDDING OF MORTAR, WITH A COMPLETE COVERAGE OF THE BLOCKS FACE SHELL (HORIZONTALLY) AND MORTAR GROOVES (VERTICALLY) AND REINFORCED WITH #9 TRUSS TYPE JOINT REINFORCEMENT @ EVERY OTHER COURSE (16"O C VERTICALLY)
MORTAR TO BOND BLOCK MASONRY SHALL BE TYPE "M", 2,500 PSI
THE FIRST BLOCK CELL ADJACENT TO ANY OPENING SHALL BE FILLED WITH CONCRETE
THE FIRST BLOCK CELL ADJACENT TO ANY OPENING FROM 3'TO 8'SHALL BE REINFORCED WITH 1- #5 VERTICAL AND BE FILLED WITH 2500 PSI CONCRETE

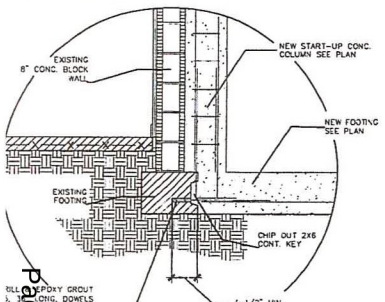

CONN. OF NEW FTG. TO EXIST'G
SCALE : 3/4" = 1'-0"

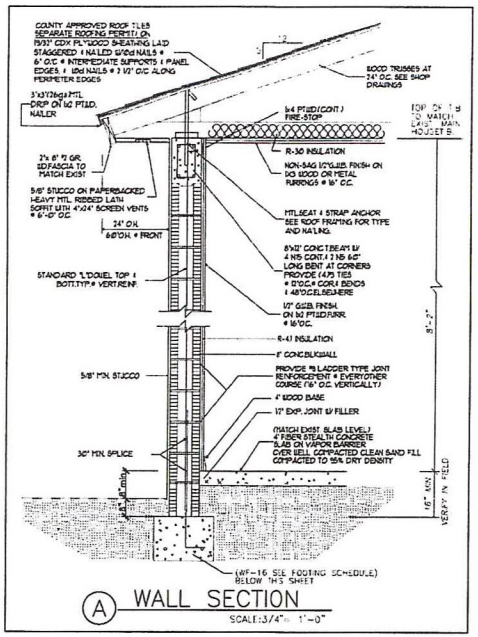

A WALL SECTION
SCALE: 3/4" = 1'-0"

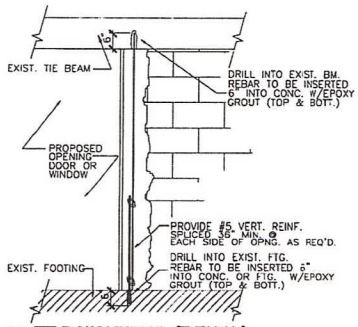

B TIE DOWN DETAIL (TYPICAL) AT EXISTING WALL
SCALE: 3/4" = 1'-0"

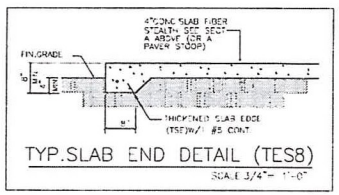

TYP.SLAB END DETAIL (TES8)
SCALE 3/4"= 1'-0"

FOOTING/COLUMN SCHEDULE

MARK	SIZE	THICK	LEVEL FROM TOP	BOTT REINFORCING A	B	C	D	TOP REINFORCING
WF-16	16"	16"	+9'-8"	2 #5 CONT.				
(C)	8"x 16"	CONCRETE COLUMN WITH 4#5 VERT & #2 TIES @ 8" O.C.						REMARKS
(C)	8"x 8"	CONCRETE COLUMN WITH 4#5 VERT & #2 TIES @ 8" O.C.						
(C)	8"x 12"	CONCRETE COLUMN WITH 4#5 VERT & #2 TIES @ 8" O.C.						
VF-4	48"x48"	20"	16"	5 #5	5#5	5#5	5#5	
MF-5	60"x60"	20"	12"	7 #5	7#5	7#5	7#5	

STEEL INFORMATION N.T.S.

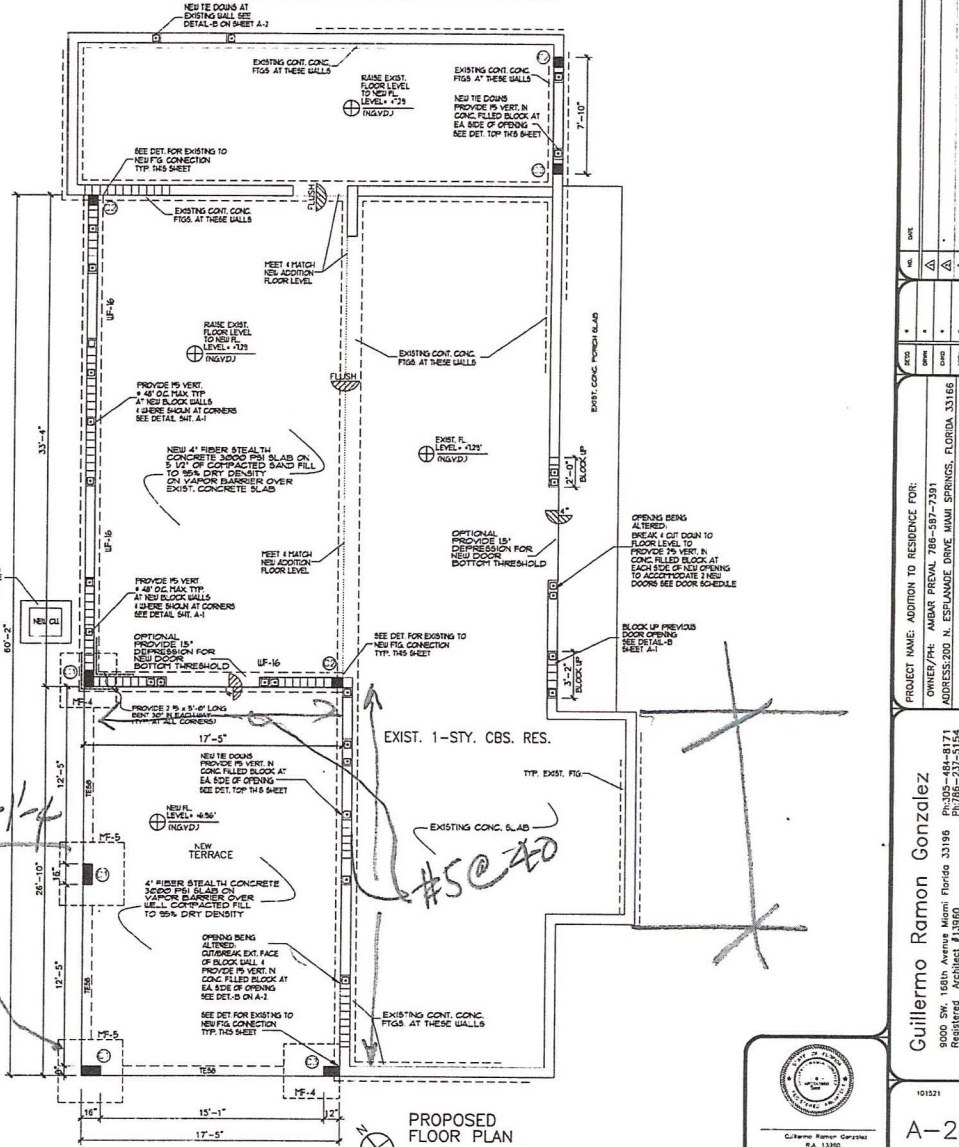

N PROPOSED FLOOR PLAN
SCALE:1/4"=1'-0"

NO.	DATE	
1		
2		
3		
4		
5		

DESIGNED *
DRAWN *
CHECKED *
APPROVED *
DATE *

PROJECT NAME: ADDITION TO RESIDENCE FOR:
OWNER/PH: AMBAR PREVAL 786-587-7391
ADDRESS:200 N. ESPLANADE DRIVE, MIAMI SPRINGS, FLORIDA 33166
PROJECT ADD: SAME

Guillermo Ramon Gonzalez
9000 SW. 166th Avenue Miami Florida 33196 Ph:305-484-8171 Fx:305-235-1545
Registered Architect #13960 Ph:786-(assistant)

101521

A-2

Guillermo Ramon Gonzalez
R.A. 13960
STATE OF FLORIDA

JOSE GUZMAN P.E.
16581 SW 64 terrace
MIAMI, FLORIDA
786-338-1082
JGUZMANALBA@AOL.COM

JOB _____

SHEET NO. _____ OF _____

CALCULATED BY _____ DATE _____

CHECKED BY _____ DATE _____

SCALE _____

Footing

wind load = 50 psf

Area = $\left(\frac{17.42}{2}+2\right)(12.42+1.33) = 147.3$ SF

$147.3 \times 50 = 7363$ #

CONC BEAM $\frac{8\times12}{144} \times 150 \times (12.42+1.33) = 1373$ #

COL. $\frac{8\times16}{144} \cdot 8.83 \times 150 = 1177$ #

ROOF $10 \text{ psf} \times 147.3 \text{ SF} = 1473$ #

Footing $5\times5\times1.5\times150 = 5625$ #

EARTH/SLAB $5\times5\times0.67\times110 = 1843$

10431

$10431 \times 0.6 = 6258 < 7363$

U.G.

Footing – 1'-4"

$5\times5\times1.33\times110 = 3658$

5625
1373
1177
1473
3658

$13305.5 \times 0.6 = 7983$ OK

MecaWind v240

Software Developer: Meca Enterprises Inc., www.meca.biz, Copyright © 2020

Calculations Prepared by:
Client: 0
Date: May 04, 2022
Designer: 0

Calculations Prepared For:
Project #: 0
Location: 0

File Location : I:\0-ALFONSO\AMBER PRIVAL\CLOSED.wnd

Basic Wind Parameters

Wind Load Standard	= ASCE 7-16	Exposure Category	= C
Wind Design Speed	= 175.0 mph	Risk Category	= II
Structure Type	= Building	Building Type	= Enclosed

General Wind Settings

Incl_LF	= Include ASD Load Factor of 0.6 in Pressures	= True
DynType	= Dynamic Type of Structure	= Rigid
Zg	= Altitude (Ground Elevation) above Sea Level	= 0.000 ft
Bdist	= Base Elevation of Structure	= 0.000 ft
SDB	= Simple Diaphragm Building	= True
MWFRSType	= MWFRS Method Selected	= Ch 27 Pt 1

Topographic Factor per Fig 26.8-1

Topo	= Topographic Feature	= None
Kzt	= Topographic Factor	= 1.000

Building Inputs

RoofType:	Building Roof Type	= Hipped	W :	Width Perp to Ridge	= 34.000 ft
L :	Length Along Ridge	= 71.000 ft	EHt :	Eave Height	= 8.500 ft
Hip :	Ridge Hipped Length	= 4.000 ft	RE :	Roof Entry Method	= Slope
Slope :	Slope of Roof	= 5.0 :12	Theta :	Roof Slope	= 22.62 Deg
Par :	Is there a Parapet	= False			

Exposure Constants per Table 26.11-1:

Alpha:	Table 26.11-1 Const	= 9.500	Zg:	Table 26.11-1 Const	= 900.000 ft
At:	Table 26.11-1 Const	= 0.105	Bt:	Table 26.11-1 Const	= 1.000
Am:	Table 26.11-1 Const	= 0.154	Bm:	Table 26.11-1 Const	= 0.650
C:	Table 26.11-1 Const	= 0.200	Eps:	Table 26.11-1 Const	= 0.200

Overhang Inputs:

Std	= Overhangs on all sides are the same	= True
OHType	= Type of Roof Wall Intersections	= Sofit
OH	= Overhang of Roof Beyond Wall	= 2.000 ft

Main Wind Force Resisting System (MWFRS) Calculations per Ch 27 Part 1:

h	= Mean Roof Height above grade	= 12.458 ft
Kh	= Z < 15 ft [4.572 m]--> (2.01 * (15/zg)^(2/Alpha) {Table 26.10-1}	= 0.849
Kzt	= Topographic Factor is 1 since no Topographic feature specified	= 1.000
Kd	= Wind Directionality Factor per Table 26.6-1	= 0.85
Zg	= Elevation above Sea Level	= 0.000 ft
Ke	= Ground Elevation Factor: Ke = e^-(0.0000362*Zg) {Table 26.9-1}	= 1.000
GCPi	= Ref Table 26.13-1 for Enclosed Building	= +/-0.18
RA	= Roof Area	= 2701.43 sq ft
LF	= Load Factor based upon ASD Design	= 0.60
qh	= (0.00256 * Kh * Kzt * Kd * Ke * V^2) * LF	= 33.94 psf
qin	= For Negative Internal Pressure of Enclosed Building use qh*LF	= 33.94 psf
qip	= For Positive Internal Pressure of Enclosed Building use qh*LF	= 33.94 psf

Gust Factor Calculation:

Gust Factor Category I Rigid Structures - Simplified Method

G1	= For Rigid Structures (Nat. Freq.>1 Hz) use 0.85	= 0.85

Gust Factor Category II Rigid Structures - Complete Analysis

Zm	= Max(0.6 * Ht, Zmin)	= 15.000 ft
Izm	= Cc * (33 / Zm) ^ 0.167	= 0.228
Lzm	= L * (Zm / 33) ^ Eps	= 427.057
B	= Structure Width Normal to Wind	= 71.000 ft
Q	= (1 / (1 + 0.63 * ((B + Ht) / Lzm)^0.63))^0.5	= 0.903
G2	= 0.925*((1+0.7*Izm*3.4*Q)/(1+0.7*3.4*Izm))	= 0.874

Gust Factor Used in Analysis

G	= Lessor Of G1 Or G2	= 0.850

MWFRS Wind Normal to Ridge (Ref Fig 27.3-1)

h	= Mean Roof Height Of Building	= 12.458 ft
RHt	= Ridge Height Of Roof	= 16.417 ft
B	= Horizontal Dimension Of Building Normal To Wind Direction	= 71.000 ft
L	= Horizontal Dimension Of building Parallel To Wind Direction	= 34.000 ft
L/B	= Ratio Of L/B used For Cp determination	= 0.479
h/L	= Ratio Of h/L used For Cp determination	= 0.366
Slope	= Slope of Roof	= 22.62 Deg
OH_Top_+Y	= Overhang Top +Y (Leeward)	= -0.6, -0.6
OH_Top_-Y	= Overhang Top Windward Edge	= 0.18, -0.29
OH_X	= Overhang Top +/-X Coeff (0 to h/2) (0.000 ft to 2.000 ft)	= -0.18, -0.9
OH_X	= Overhang Top +/-X Coeff (0 to h/2) (2.000 ft to 6.229 ft)	= -0.18, -0.9
OH_X	= Overhang Top +/-X Coeff (h/2 to h) (6.229 ft to 12.458 ft)	= -0.18, -0.9
OH_X	= Overhang Top +/-X Coeff (h to 2h) (12.458 ft to 19.000 ft)	= -0.18, -0.5
OH_X	= Overhang Top +/-X Coeff (h to 2h) (19.000 ft to 24.917 ft)	= -0.18, -0.5
OH_X	= Overhang Top +/-X Coeff (>2h) (>24.917 ft)	= -0.18, -0.3
OH_X	= Overhang Top +/-X Coeff (>2h) (>36.000 ft)	= -0.18, -0.3
Roof_LW	= Roof (Leeward)	= -0.6, -0.6
Roof_WW	= Roof (Windward)	= 0.18, -0.29
Roof_X	= Roof +/-X Coeff (0 to h/2) (2.000 ft to 6.229 ft)	= -0.18, -0.9
Roof_X	= Roof +/-X Coeff (h/2 to h) (6.229 ft to 12.458 ft)	= -0.18, -0.9
Roof_X	= Roof +/-X Coeff (h to 2h) (12.458 ft to 24.917 ft)	= -0.18, -0.5
Roof_X	= Roof +/-X Coeff (>2h) (>24.917 ft)	= -0.18, -0.3
Sofit_-Y	= Overhang Sofit -Y	= 0.8, 0.8

Cp_WW	= Windward Wall Coefficient (All L/B Values)	= 0.80
Cp_LW	= Leward Wall Coefficient using L/B	= -0.50
Cp_SW	= Side Wall Coefficient (All L/B values)	= -0.70
GCpn_WW	= Parapet Combined Net Pressure Coefficient (Windward Parapet)	= 1.50
GCpn_LW	= Parapet Combined Net Pressure Coefficient (Leeward Parapet)	= -1.00

Wall Wind Pressures based On Positive Internal Pressure (+GCPi) - Normal to Ridge
All wind pressures include a load factor of 0.6

Elev ft	Kz	Kzt	qz psf	GCPi	Windward Press psf	Leeward Press psf	Side Press psf	Total Press psf	Minimum Pressure* psf
8.50	0.849	1.000	33.94	0.18	16.97	-20.53	-26.30	37.51	9.60

Wall Wind Pressures based on Negative Internal Pressure (-GCPi) - Normal to Ridge
All wind pressures include a load factor of 0.6

Elev ft	Kz	Kzt	qz psf	GCPi	Windward Press psf	Leeward Press psf	Side Press psf	Total Press psf	Minimum Pressure* psf
8.50	0.849	1.000	33.94	-0.18	29.19	-8.32	-14.09	37.51	9.60

Notes Wall Pressures:
Kz = Velocity Press Exp Coeff
Kzt = Topographical Factor
qz = 0.00256*Kz*Kzt*Kd*V^2
GCPi = Internal Press Coefficient
Side = qh * G * Cp_SW - qip * +GCPi
Windward = qz * G * Cp_WW - qip * +GCPi
Leeward = qh * G * Cp_LW - qip * +GCPi
Total = Windward Press - Leeward Press
* Minimum Pressure: Para 27.1.5 no less than 9.60 psf (Incl LF) applied to Walls
+ Pressures Acting TOWARD Surface
- Pressures Acting AWAY from Surface

Roof Wind Pressures for Positive & Negative Internal Pressure (+/- GCPi) - Normal to Ridge
All wind pressures include a load factor of 0.6

Roof Var	Start Dist ft	End Dist ft	Cp_min	Cp_max	GCPi	Pressure Pn_min* psf	Pressure Pp_min* psf	Pressure Pn_max psf	Pressure Pp_max psf
OH_Top_+Y	N/A	N/A	-0.600	-0.600	0.180	-11.20	-23.42	-11.20	-23.42
OH_Top_+Y	N/A	N/A	-0.600	-0.600	0.180	-11.20	-23.42	-11.20	-23.42
OH_Top_-Y	N/A	N/A	0.180	-0.290	0.180	11.30	-0.92	-2.26	-14.48

OH_Top_-Y	N/A	N/A	0.180	-0.290	0.180	11.30	-0.92	-2.26	-14.48
OH_X (+X)	0.000	2.000	-0.180	-0.900	0.180	0.92	-11.30	-19.86	-32.07
OH_X (-X)	0.000	2.000	-0.180	-0.900	0.180	0.92	-11.30	-19.86	-32.07
OH_X (+X)	2.000	6.229	-0.180	-0.900	0.180	0.92	-11.30	-19.86	-32.07
OH_X (-X)	2.000	6.229	-0.180	-0.900	0.180	0.92	-11.30	-19.86	-32.07
OH_X (+X)	6.229	12.458	-0.180	-0.900	0.180	0.92	-11.30	-19.86	-32.07
OH_X (-X)	6.229	12.458	-0.180	-0.900	0.180	0.92	-11.30	-19.86	-32.07
OH_X (+X)	12.458	19.000	-0.180	-0.500	0.180	0.92	-11.30	-8.32	-20.53
OH_X (-X)	12.458	19.000	-0.180	-0.500	0.180	0.92	-11.30	-8.32	-20.53
OH_X (+X)	19.000	24.917	-0.180	-0.500	0.180	0.92	-11.30	-8.32	-20.53
OH_X (-X)	19.000	24.917	-0.180	-0.500	0.180	0.92	-11.30	-8.32	-20.53
OH_X (+X)	24.917	36.000	-0.180	-0.300	0.180	0.92	-11.30	-2.55	-14.76
OH_X (-X)	24.917	36.000	-0.180	-0.300	0.180	0.92	-11.30	-2.55	-14.76
OH_X (+X)	36.000	38.000	-0.180	-0.300	0.180	0.92	-11.30	-2.55	-14.76
OH_X (-X)	36.000	38.000	-0.180	-0.300	0.180	0.92	-11.30	-2.55	-14.76
Roof_LW	N/A	N/A	-0.600	-0.600	0.180	-11.20	-23.42	-11.20	-23.42
Roof_WW	N/A	N/A	0.180	-0.290	0.180	11.30	-0.92	-2.26	-14.48
Roof_X (+X)	2.000	6.229	-0.180	-0.900	0.180	0.92	-11.30	-19.86	-32.07
Roof_X (-X)	2.000	6.229	-0.180	-0.900	0.180	0.92	-11.30	-19.86	-32.07
Roof_X (+X)	6.229	12.458	-0.180	-0.900	0.180	0.92	-11.30	-19.86	-32.07
Roof_X (-X)	6.229	12.458	-0.180	-0.900	0.180	0.92	-11.30	-19.86	-32.07
Roof_X (+X)	12.458	24.917	-0.180	-0.500	0.180	0.92	-11.30	-8.32	-20.53
Roof_X (-X)	12.458	24.917	-0.180	-0.500	0.180	0.92	-11.30	-8.32	-20.53
Roof_X (+X)	24.917	36.000	-0.180	-0.300	0.180	0.92	-11.30	-2.55	-14.76
Roof_X (-X)	24.917	36.000	-0.180	-0.300	0.180	0.92	-11.30	-2.55	-14.76
Sofit_-Y	N/A	N/A	0.800	0.800	0.180	29.19	16.97	29.19	16.97

Notes Roof Pressures:
Start Dist = Start Dist from Windward Edge End Dist = End Dist from Windward Edge
Cp_Max = Largest Coefficient Magnitude Cp_Min = Smallest Coefficient Magnitude
Pp_max = qh*G*Cp_max - qip*(+GCPi) Pn_max = qh*G*Cp_max - qin*(-GCpi)
Pp_min* = qh*G*Cp_min - qip*(+GCPi) Pn_min* = qh*G*Cp_min - qin*(-GCPi)
OH = Overhang X = Dir along Ridge Y = Dir Perpendcular to Ridge Z = Vertical
* The smaller uplift pressures due to Cp_Min can become critical when wind is combined with roof live load or snow load; load combinations are given in ASCE 7
+ Pressures Acting TOWARD Surface - Pressures Acting AWAY from Surface

MWFRS Wind Parallel to Ridge (Ref Fig 27.3-1)

h	= Mean Roof Height Of Building	= 12.458 ft
RHt	= Ridge Height Of Roof	= 16.417 ft
B	= Horizontal Dimension Of Building Normal To Wind Direction	= 34.000 ft
L	= Horizontal Dimension Of building Parallel To Wind Direction	= 71.000 ft
L/B	= Ratio Of L/B used For Cp determination	= 2.088
h/L	= Ratio Of h/L used For Cp determination	= 0.175
Slope	= Slope of Roof	= 22.62 Deg
Hip_End	= Hipped End Coeff (0 to h/2) (2.000 ft to 6.229 ft)	= -0.18, -0.9
Hip_End	= Hipped End Coeff (h/2 to h) (6.229 ft to 12.458 ft)	= -0.18, -0.9
Hip_End	= Hipped End Coeff (h to 2h) (12.458 ft to 24.917 ft)	= -0.18, -0.5
Hip_End	= Hipped End Coeff (>2h) (>24.917 ft)	= -0.18, -0.3
Hip_End	= Hipped End Coeff (>2h) (>39.500 ft)	= -0.18, -0.3
OH_Bot	= Sofit (Windward Face Only)	= 0.8, 0.8
OH_Top	= Overhang Top Coeff (0 to h/2) (0.000 ft to 2.000 ft)	= -0.18, -0.9
OH_Top	= Overhang Top Coeff (0 to h/2) (2.000 ft to 6.229 ft)	= -0.18, -0.9
OH_Top	= Overhang Top Coeff (h/2 to h) (6.229 ft to 12.458 ft)	= -0.18, -0.9
OH_Top	= Overhang Top Coeff (h to 2h) (12.458 ft to 24.917 ft)	= -0.18, -0.5
OH_Top	= Overhang Top Coeff (>2h) (>24.917 ft)	= -0.18, -0.3
OH_Top	= Overhang Top Coeff (>2h) (>37.500 ft)	= -0.18, -0.3
OH_Top	= Overhang Top Coeff (>2h) (>73.000 ft)	= -0.18, -0.3
Roof	= Roof Coeff (0 to h/2) (2.000 ft to 6.229 ft)	= -0.18, -0.9
Roof	= Roof Coeff (h/2 to h) (6.229 ft to 12.458 ft)	= -0.18, -0.9
Roof	= Roof Coeff (h to 2h) (12.458 ft to 24.917 ft)	= -0.18, -0.5
Roof	= Roof Coeff (>2h) (>24.917 ft)	= -0.18, -0.3
Cp_WW	= Windward Wall Coefficient (All L/B Values)	= 0.80
Cp_LW	= Leward Wall Coefficient using L/B	= -0.30
Cp_SW	= Side Wall Coefficient (All L/B values)	= -0.70
GCpn_WW	= Parapet Combined Net Pressure Coefficient (Windward Parapet)	= 1.50
GCpn_LW	= Parapet Combined Net Pressure Coefficient (Leeward Parapet)	= -1.00

Wall Wind Pressures based On Positive Internal Pressure (+GCPi) - Parallel to Ridge
All wind pressures include a load factor of 0.6

Elev ft	Kz	Kzt	qz psf	GCPi	Windward Press psf	Leeward Press psf	Side Press psf	Total Press psf	Minimum Pressure* psf
8.50	0.849	1.000	33.94	0.18	16.97	-14.64	-26.30	31.61	9.60

Wall Wind Pressures based on Negative Internal Pressure (-GCPi) - Parallel to Ridge
All wind pressures include a load factor of 0.6

Elev ft	Kz	Kzt	qz psf	GCPi	Windward Press psf	Leeward Press psf	Side Press psf	Total Press psf	Minimum Pressure* psf
8.50	0.849	1.000	33.94	-0.18	29.19	-2.42	-14.09	31.61	9.60

Notes Wall Pressures:
Kz = Velocity Press Exp Coeff
qz = 0.00256*Kz*Kzt*Kd*V^2
Side = qh * G * Cp_SW - qip * +GCPi
Leeward = qh * G * Cp_LW - qip * +GCPi
Kzt = Topographical Factor
GCPi = Internal Press Coefficient
Windward = qz * G * Cp_WW - qip * +GCPi
Total = Windward Press - Leeward Press
* Minimum Pressure: Para 27.1.5 no less than 9.60 psf (Incl LF) applied to Walls
+ Pressures Acting TOWARD Surface
- Pressures Acting AWAY from Surface

Roof Wind Pressures for Positive & Negative Internal Pressure (+/- GCPi) - Parallel to Ridge
All wind pressures include a load factor of 0.6

Roof Var	Start Dist ft	End Dist ft	Cp_min	Cp_max	GCPi	Pressure Pn_min* psf	Pressure Pp_min* psf	Pressure Pn_max psf	Pressure Pp_max psf
Hip_End (-X)	2.000	6.229	-0.180	-0.900	0.180	0.92	-11.30	-19.86	-32.07
Hip_End (-X)	6.229	12.458	-0.180	-0.900	0.180	0.92	-11.30	-19.86	-32.07
Hip_End (-X)	12.458	24.917	-0.180	-0.500	0.180	0.92	-11.30	-8.32	-20.53
Hip_End (-X)	24.917	35.500	-0.180	-0.300	0.180	0.92	-11.30	-2.55	-14.76
Hip_End (+X)	39.500	73.000	-0.180	-0.300	0.180	0.92	-11.30	-2.55	-14.76
OH_Bot	N/A	N/A	0.800	0.800	0.180	29.19	16.97	29.19	16.97
OH_Top (-X)	0.000	2.000	-0.180	-0.900	0.180	0.92	-11.30	-19.86	-32.07
OH_Top (-X)	0.000	2.000	-0.180	-0.900	0.180	0.92	-11.30	-19.86	-32.07
OH_Top (-X)	0.000	2.000	-0.180	-0.900	0.180	0.92	-11.30	-19.86	-32.07
OH_Top (-X)	0.000	2.000	-0.180	-0.900	0.180	0.92	-11.30	-19.86	-32.07
OH_Top (+Y)	0.000	2.000	-0.180	-0.900	0.180	0.92	-11.30	-19.86	-32.07
OH_Top (-Y)	0.000	2.000	-0.180	-0.900	0.180	0.92	-11.30	-19.86	-32.07
OH_Top (+Y)	2.000	6.229	-0.180	-0.900	0.180	0.92	-11.30	-19.86	-32.07
OH_Top (-Y)	2.000	6.229	-0.180	-0.900	0.180	0.92	-11.30	-19.86	-32.07
OH_Top (+Y)	6.229	12.458	-0.180	-0.900	0.180	0.92	-11.30	-19.86	-32.07
OH_Top (-Y)	6.229	12.458	-0.180	-0.900	0.180	0.92	-11.30	-19.86	-32.07
OH_Top (+Y)	12.458	24.917	-0.180	-0.500	0.180	0.92	-11.30	-8.32	-20.53
OH_Top (-Y)	12.458	24.917	-0.180	-0.500	0.180	0.92	-11.30	-8.32	-20.53
OH_Top (+Y)	24.917	37.500	-0.180	-0.300	0.180	0.92	-11.30	-2.55	-14.76
OH_Top (-Y)	24.917	37.500	-0.180	-0.300	0.180	0.92	-11.30	-2.55	-14.76
OH_Top (+Y)	37.500	73.000	-0.180	-0.300	0.180	0.92	-11.30	-2.55	-14.76
OH_Top (-Y)	37.500	73.000	-0.180	-0.300	0.180	0.92	-11.30	-2.55	-14.76
OH_Top (+X)	73.000	75.000	-0.180	-0.300	0.180	0.92	-11.30	-2.55	-14.76
OH_Top (+X)	73.000	75.000	-0.180	-0.300	0.180	0.92	-11.30	-2.55	-14.76
OH_Top (+X)	73.000	75.000	-0.180	-0.300	0.180	0.92	-11.30	-2.55	-14.76
OH_Top (+X)	73.000	75.000	-0.180	-0.300	0.180	0.92	-11.30	-2.55	-14.76
OH_Top (+Y)	73.000	75.000	-0.180	-0.300	0.180	0.92	-11.30	-2.55	-14.76
OH_Top (-Y)	73.000	75.000	-0.180	-0.300	0.180	0.92	-11.30	-2.55	-14.76
Roof (+Y)	2.000	6.229	-0.180	-0.900	0.180	0.92	-11.30	-19.86	-32.07
Roof (-Y)	2.000	6.229	-0.180	-0.900	0.180	0.92	-11.30	-19.86	-32.07
Roof (+Y)	6.229	12.458	-0.180	-0.900	0.180	0.92	-11.30	-19.86	-32.07
Roof (-Y)	6.229	12.458	-0.180	-0.900	0.180	0.92	-11.30	-19.86	-32.07
Roof (+Y)	12.458	24.917	-0.180	-0.500	0.180	0.92	-11.30	-8.32	-20.53
Roof (-Y)	12.458	24.917	-0.180	-0.500	0.180	0.92	-11.30	-8.32	-20.53
Roof (+Y)	24.917	73.000	-0.180	-0.300	0.180	0.92	-11.30	-2.55	-14.76
Roof (-Y)	24.917	73.000	-0.180	-0.300	0.180	0.92	-11.30	-2.55	-14.76

Notes Roof Pressures:
Start Dist = Start Dist from Windward Edge End Dist = End Dist from Windward Edge

```
Cp_Max     = Largest Coefficient Magnitude  Cp_Min   = Smallest Coefficient Magnitude
Pp_max     = qh*G*Cp_max - qip*(+GCPi)      Pn_max   = qh*G*Cp_max - qin*(-GCpi)
Pp_min*    = qh*G*Cp_min - qip*(+GCPi)      Pn_min*  = qh*G*Cp_min - qin*(-GCPi)
OH = Overhang   X = Dir along Ridge   Y = Dir Perpendcular to Ridge  Z = Vertical
* The smaller uplift pressures due to Cp_Min can become critical when wind is combined
  with roof live load or snow load;  load combinations are given in ASCE 7
+ Pressures Acting TOWARD Surface          - Pressures Acting AWAY from Surface
```

Components and Cladding (C&C) Calculations per Ch 30 Part 1:

h/W	= Ratio of mean roof height to building width	= 0.366
h/L	= Ratio of mean roof height to building length	= 0.175
h	= Mean Roof Height above grade	= 12.458 ft
Kh	= Z < 15 ft [4.572 m]--> (2.01 * (15/zg)^(2/Alpha) {Table 26.10-1}	= 0.849
Kzt	= Topographic Factor is 1 since no Topographic feature specified	= 1.000
Kd	= Wind Directionality Factor per Table 26.6-1	= 0.85
GCPi	= Ref Table 26.13-1 for Enclosed Building	= +/-0.18
LF	= Load Factor based upon ASD Design	= 0.60
qh	= (0.00256 * Kh * Kzt * Kd * Ke * V^2) * LF	= 33.94 psf
LHD	= Least Horizontal Dimension: Min(B, L)	= 34.000 ft
a1	= Min(0.1 * LHD, 0.4 * h)	= 3.400 ft
a	= Max(a1, 0.04 * LHD, 3 ft [0.9 m])	= 3.400 ft
h/B	= Ratio of mean roof height to least hor dim: h / B	= 0.366

Wind Pressures for C&C Ch 30 Pt 1
All wind pressures include a load factor of 0.6

Description	Zone	Width ft	Span ft	Area sq ft	1/3 Rule	Ref Fig	GCp Max	GCp Min	p Max psf	p Min psf
roof	1	2.000	36.000	432.00	Yes	30.3-2G	0.300	-0.800	16.29	-33.26
roof	2e	2.000	36.000	432.00	Yes	30.3-2G	0.300	-1.000	16.29	-40.05
roof	2r	2.000	36.000	432.00	Yes	30.3-2G	0.300	-1.000	16.29	-40.05
wlf	4	1.000	10.000	33.33	Yes	30.3-1	0.908	-1.008	36.92	-40.31
wlf	5	1.000	10.000	33.33	Yes	30.3-1	0.908	-1.215	36.92	-47.36

```
Area     = Span Length x Effective Width
1/3 Rule = Effective width need not be less than 1/3 of the span length
GCp      = External Pressure Coefficients taken from Figures 30.3-1 through 30.3-7
p        = Wind Pressure:  qh*(GCp - GCpi)  [Eqn 30.3-1]*
* Per Para 30.2.2 the Minimum Pressure for C&C is 9.60 psf [0.460 kPa] {Includes LF}
```

Components and Cladding (C&C) Overhang Calculations per Section 30.9:

h	= Mean Roof Height above grade	= 12.458 ft
Kh	= Z < 15 ft [4.572 m]--> (2.01 * (15/zg)^(2/Alpha) {Table 26.10-1}	= 0.849
Kzt	= Topographic Factor is 1 since no Topographic feature specified	= 1.000
Kd	= Wind Directionality Factor per Table 26.6-1	= 0.85
GCPi	= Ref Table 26.13-1 for Enclosed Building	= +/-0.18
LF	= Load Factor based upon ASD Design	= 0.60
qh	= (0.00256 * Kh * Kzt * Kd * Ke * V^2) * LF	= 33.94 psf

Wind Pressures for C&C per Section 30.9 & Figure 30.3-2
All wind pressures include a load factor of 0.6

Description	Zone	Width ft	Span Length ft	Area sq ft	1/3 Rule	Ref Fig	GCpi +/-	GCp Max	GCp Min	p Max psf	p Min psf
roof	2e_OHS	2.000	2.000	4.00	No	30.3-2G	0.18	0.000	-2.500	9.60	-90.96

```
#_OHS    = Zone # on Overhang w/ Sofit w/ Buildings Internal Pressure (GCPi = +/-0.18)
Area     = Span Length x Effective Width
1/3 Rule = Effective width need not be less than 1/3 of the span length
p        = Wind Pressure:  qh*(GCp - GCpi)*LF  [Eqn 30.3-1]*
* Per Para 30.2.2 the Minimum Pressure for C&C is 9.60 psf [0.460 kPa] {Includes LF}
Values of GCp for overhangs include contributions from both upper and lower surfaces.
```

Description

General Information

Code Ref: ACI 530-02

Wall Height	10.00 ft	Seismic Factor	0.0000	f'm	1,500.0 psi
Parapet Height	0.00 ft	Calc of Em = f'm *	900.00	Fs	24,000.0 psi
		Duration Factor	1.000	Special Inspection	
Thickness	8.0 in	Wall Wt Mult.	1.000	Grout @ Rebar Only	
Rebar Size	5			Normal Weight Block	
Rebar Spacing	32 in			Equivalent	
Depth to Rebar	3.810 in @ Center			Solid Thickness	4.900 in

Loads

Uniform Load		Concentric Axial Load		Wind Load	61.610 psf
Dead Load	0.000 #/ft	Dead Load	0.000 #/ft		
Live Load	0.000 #/ft	Live Load	0.000 #/ft		
Load Eccentricity	0.000 in	Roof Load			
Roof Load					

Design Values

E	1,350,000 psi	Rebar Area	0.116 in2	np	0.05462	j	0.90654
n : Es / Em	21.481	Radius of Gyration	2.487 in	k	0.28038	2 / kj	7.86864
Wall Weight	58.000 psf	Moment of Inertia	363.660 in4				

Max Allow Axial Stress = 0.25 f'm (1-(h/140r)^2) * SpInsp	330.45 psi
Allow Masonry Bending Stress = 0.33 f'm * SpInsp =	495.00 psi
Allow Steel Bending Stress =	24,000.00 psi

Load Combination & Stress Details Summary

	Moment	Axial Load	Bending Stresses Steel	Bending Stresses Masonry	Axial Compression
Top of Wall	in-#	lbs	psi	psi	psi
DL + LL	0.0	0.0	0.0	0.0	0.00
DL + LL + Wind	0.0	0.0	0.0	0.0	0.00
DL + LL + Seismic	0.0	0.0	0.0	0.0	0.00
Between Base & Top of Wall					
DL + LL	0.0	290.0	0.0	0.0	4.93
DL + LL + Wind	9,241.5	290.0	23,016.4	417.5	4.93
DL + LL + Seismic	0.0	290.0	0.0	0.0	4.93

Summary

10.00ft high wall with 0.00ft parapet, Normal Block w/ 8.00in wall w/ #5 bars at 32.00ino.c. at center

Max. Bending Compressive Stress	422.39	OK
Allowable	495.00	OK
Max. Axial Only Compressive Stress	4.93	psi
Allowable	330.45	OK
Max Steel Bending Stress	23,016.38	psi
Allowable	24,000.00	OK

Permit Reviews
City of Miami Springs

Permit Number: RES21-1143

Description: **ADDITION TO RESIDENCE AND OVERALL REMODELING TO EXIST RES.**

Applied: **12/10/2021**

Approved:

Site Address: **200 ESPLANADE DRIVE**

Issued:

Finaled:

City, State Zip Code: **MIAMI SPRINGS, FL 33166**

Status: **PLAN REVIEW**

Applicant: **<NONE>**

Parent Permit:

Owner: **JOVANY JIMENEZ & AMBAR SARA PREVAL**

Parent Project:

Contractor: **<NONE>**

Details:

NO SURVEY SUBMITTED

LIST OF REVIEWS

SENT DATE	RETURNED DATE	DUE DATE	TYPE	CONTACT	STATUS	REMARKS
Review Group: AUTO						
12/10/2021	3/17/2022	12/20/2021	BUILDING	ULISES FERNANDEZ	REWORK REQUIRED	
Notes: PROVIDE JOB COST. FURTHER COMPLIANCE W/ FLOOD MAY BE REQUIRED. FURTHER COMMENTS MAY FOLLOW. 1. PLEASE COORDINATE DEMOLITION PLANS TO SHOW ALL ITEMS BEING REMOVED (EX: INTERIOR PARTITIONS AND KITCHEN). 2. ANY ITEMS TO REMAIN, SHALL REQUIRE DETAIL. 3. ON SITE PLAN, PLEASE SHOW DIRECTION OF POWER SERVICE LINE. 4. ON DEMOLITION PLAN, SHOW THAT EXISTING ROOFING & ROOF STRUCTURE SHALL BE DEMOLISHED. 5. SHOW FLOOD CRITERIA ON PLANS. 6. SHOW SHGC & U FACTOR VALUES ON DOOR SCHEDULE FOR GLASS DOORS. 7. SHOW COMPLIANCE WITH SHOWER ACCESS AS PER FBC R P2708.1.1. 8. PLEASE PROVIDE SHOWER CURB DETAIL & SHOW TYPE OF SHOWER ENCLOSURE. 9. SUBMIT NOA FOR PRECAST LINTEL. 10. NOA'S SHALL BE MARKED/HIGHLIGHTED TO SHOW SELECTED MODEL TYPE & FASTENERS. 11. SEE MARK-UPS ON OFFICE COPY. 12. PROVIDE ANSWER SHEET TO COMMENTS WITH LOCATION OF CORRECTIONS ON DESGIN PROFESSIONAL'S LETTER HEAD.						
12/10/2021	2/17/2022	12/20/2021	ELECTRICAL	MIGUEL MENDEZ	REWORK REQUIRED	
Notes: MISSING RECEPTACKS TO COMPLY WITH NEC210.52 SEE MARKING						
12/10/2021	2/17/2022	12/20/2021	MECHANICAL	RON REGULA	APPROVED	
Notes:						
12/10/2021	2/12/2022	12/20/2021	PLUMBING	ELISEO ARES	APPROVED	
Notes: 1-WASHING MACHINE WET-VENT NOT TO CODE. 2-SHOW WATER HEATER DETAL ANS LOCATION ON PLAN. 3-PLASE DONT REMOVE REVIW PAGE.						

Permit Reviews
City of Miami Springs

12/10/2021		12/20/2021	ROOFING	ULISES FERNANDEZ		
Notes:						
12/10/2021	2/24/2022	12/20/2021	STRUCTURE	MISAEL RODRIGUEZ	REWORK REQUIRED	
Notes: PROVIDE STRUCTURAL CALCULATION FOR COMPLETE REVIEW						
12/10/2021	12/14/2021	12/20/2021	ZONING	CHRISTOPHER HEID	APPROVED	
Notes: SURVEY REQUIRED. TABULAR SUMMARY IN COMPARATIVE FORMAT REQUIRED. SEE SAMPLE DATA SHEET ATTACHED.						

OFFICE COPY
CITY OF MIAMI SPRINGS

MIAMI SPRINGS
At the Heart of it All!

CITY OF MIAMI SPRINGS
CITY PLANNER
201 WESTWARD DRIVE
MIAMI SPRINGS, FL 33166
(305)805-5034

CITY OF MIAMI SPRINGS
BUILDING DEPARTMENT
DEC 16 2021
RECEIVED

PROJECT DATA

To be submitted with new construction & additions

	ZONING DISTRICT		
		REQUIRED/ ALLOWED	PROVIDED
	NET LOT AREA	7,500	7,500
	PARKING SPACES	3	4
YARDS	FRONT	30'	15.09' exist. condition approved
	SIDE (CORNER)	15'	35.36' exist. condition approved
	SIDE (INTERIOR)	7.50'	7.67' new condition
	SIDE (INTERIOR)		
AREA CALCULATIONS	REAR	25.0'	13.86' approved to match exist. condition
	MINIMUM FLOOR AREA	1,200	2,374
	HEIGHT	25' to ridge	17'-6" proposed
	FRONT YARD PERVIOUS	1,350 60%	2,606 85%
	MAXIMUM LOT COVERAGE	40%	32%
	MINIMUM LANDSCAPED AREA	30%	57%

C:\Users\Alfonso\AppData\Local\Microsoft\Windows\INetCache\Content.Outlook\GTK249R4\PROJECT DATA.doc

U.S. DEPARTMENT OF HOMELAND SECURITY
Federal Emergency Management Agency
National Flood Insurance Program

CITY OF MIAMI SPRINGS
BUILDING DEPARTMENT

DEC 1 4 2021

RECEIVED

OMB No. 1660-0008
Expiration Date: November 30, 2022

ELEVATION CERTIFICATE

Important: Follow the instructions on pages 1-9.

Copy all pages of this Elevation Certificate and all attachments for (1)community official,(2) insurance agent/company and (3)building owner.

SECTION A - PROPERTY INFORMATION			FOR INSURANCE COMPANY USE
A1. Building Owner's Name Jovany Jimenez and Ambar Sara Preval			Policy Number:
A2. Building Street Address (including Apt., Unit, Suite, and/or Bldg. No.) or P.O. Route and Box No. 200 N. Esplanade Drive			Company NAIC Number:
City Miami Springs	State FLORIDA	ZIP Code 33166	

A3. Property Description (Lot and Block numbers, Tax Parcel Number, Legal Description, etc.)
TAX PARCEL ID: 05-3118-016-1590

A4. Building Use (e.g., Residential, Non-Residential, Addition, Accessory, Etc.) Residential

A5. Lattitude/Longitude: Lat. N 25°49'23.49 Long. W 80°17'9.09 Horizontal Datum: ☐ NAD 1927 ☒ NAD 1983

A6. Attach at least 2 photographs of the building if the Certificate is being used to obtain flood insurance

A7. Building Diagram number 1A

A8. For a building with a crawlspace or enclosure(s):

a) Square footage of crawlspace or enclosure(s) 0 Sq. Ft.

b) No. of permanent flood openings in the crawlspace or enclosure(s) within 1.0 foot above adjacent grade 0

c) Total net area of flood openings in A8.b 0 Sq. in.

d) Engineered flood openings? ☐ Yes ☒ No

A9. For a building with an attached garage:

a) Square footage of attached garage N/A Sq. Ft.

b) No. of permanent flood openings in the attached garage within 1.0 foot above adjacent grade N/A

c) Total net area of flood openings in A9.b N/A Sq. In.

d) Engineered flood openings? ☐ Yes ☒ No

SECTION B - FLOOD INSURANCE RATE MAP (FIRM) INFORMATION

B1. NFIP Community Name & Community Number	B2. County Name	B3. State
MIAMI SPRINGS/ 120653	Miami-Dade County	FLORIDA

B4.Map/Panel Number	B5.Suffix	B6.FIRM Index Date	B7.FIRM Panel Effective /Revised Date	B8.Flood Zone(s)	B9.Base Flood elevation(s) (Zone AO, use base flood depth)
12086C0283	L	09/11/2009	09/11/2009	AH	7.0'

B10.Indicate the source of the Base Flood Elevation (BFE) data or base flood depth entered in item B9:
☐ FIS Profile ☒ FIRM ☐ Community Determined ☐ Other (Describe) _____

B11. Indicate elevation datum used for BFE in Item B9: ☒ NGVD 1929 ☐ NAVD 1988 ☐ Other (Describe) _____

B12.Is the building located in a Costal Barrier Resources System (CBRS) area or Otherwise protected Area (OPA)? ☐ Yes ☒ No
Designation Date N/A ☐ CBRS ☐ OPA

ELEVATION CERTIFICATE

OMB No. 1660-0008

Expiration Date: November 30, 2022

IMPORTANT: In these spaces, copy the corresponding information from Section A.			FOR INSURANCE COMPANY USE
Building Street Address (including Apt., Unit, Suite, and/or Bldg. No.) or P.O. Route and Box No. 200 N. Esplanade Drive			Policy Number:
City Miami Springs	State FLORIDA	ZIP Code 33166	Company NAIC Number:

SECTION C - BUILDING ELEVATION INFORMATION (SURVEY REQUIRED)

C1. Building elevations are based on: ☐ Construction Drawings* ☐ Building Under Construction* ☒ Finished Construction

*A new Elevation Certificate will be required when construction of the building is complete.

C2. Elevations - Zones A1-A30, AE, AH, A (with BFE), VE, V1-V30, V (with BFE), AR, AR/A, AR/AE, AR/A1-A30, AR/AH, AR/AO. Complete items C2.a-h below according to the building diagram specified in item A7. IN Puerto Rico only, enter meters.

Benchmark Utilized: FDOT REAL TIME GPS Vertical Datum: NGVD 1929

Indicate elevation datum used for the elevations in items a) through h) below.

☒ NGVD 1929 ☐ NAVD 1988 ☐ Other/Source: _____

Datum used for building elevations must be the same as that used for the BFE.

		Check the measurement used.
a) Top of bottom floor (Including basement, crawlspace, or enclosure floor)	7 . 29	☒ feet ☐ meters
b) Top of the next highest floor	N/A .	☐ feet ☐ meters
c) Bottom of the lowest horizontal structural member (V Zones only)	N/A .	☐ feet ☐ meters
d) Attached Garage (top of slab)	6 . 56	☒ feet ☐ meters
e) Lowest elevation of machinery or equipment servicing the building (Describe type of equipment and location in Comments)	N/A .	☐ feet ☐ meters
f) Lowest adjacent (finished) grade next to building (LAG)	6 . 38	☒ feet ☐ meters
g) Highest adjacent (finished) grade next to building (HAG)	6 . 47	☒ feet ☐ meters
h) Lowest adjacent grade at lowest elevation of deck or stairs including structural support	N/A .	☐ feet ☐ meters

SECTION D – SURVEYOR, ENGINEER, OR ARCHITECT CERTIFICATION

This certification is to be signed and sealed by a land surveyor, engineer, or architect authorized by law to certify elevation information.
I certify that the information on this Certificate represents my best efforts to interpret the data available. I understand that any false statement may be punishable by fine or imprisonment under 18 U.S. Code, Section 1001.

Were latitude and longitude in Section A provided by a licensed land surveyor? ☐ Yes ☒ No ☐ Check here if attachments.

Certifier's Name	License number	
FERNANDO FERNANDEZ	6765	
Title		
PROFESSIONAL SURVEYOR & MAPPER		
Company Name		
ME LAND SURVEYING		
Address		
10665 SW 190th STREET SUITE 3110		
City	State	ZIP Code
MIAMI	FL	33157

FERNANDO FERNANDEZ LICENSE NUMBER NO. 6765 STATE OF FLORIDA PROFESSIONAL SURVEYOR & MAPPER

Signature	Date	Telephone
	07/29/2021	(305) 740-3319

Copy all pages of this Elevation Certificate and all attachments for (1) community official, (2)insurance agent/company, (3) building owner.

Comments (including type of equipment and location, per C2(e), if applicable)
LATITUDE LONGITUDE PER GOOGLE, ATTACHMENTS = BUILDING PICTURES
VERTCON CONVERSION NAVD 1988 TO NGVD 1929= +1.55'
This elevation certificate is for flood insurance rating purposes only and may not be used for building permitting purposes due to measurement precision issues.

ELEVATION CERTIFICATE

OMB No. 1660-0008

Expiration Date: November 30, 2022

IMPORTANT: In these spaces, copy the corresponding information from Section A.			FOR INSURANCE COMPANY USE
Building Street Address (including Apt., Unit, Suite, and/or Bldg. No.) or P.O. Route and Box No. 200 N. Esplanade Drive			Policy Number:
City Miami Springs	State FLORIDA	ZIP Code 33166	Company NAIC Number:

SECTION E - BUILDING ELEVATION INFORMATION (SURVEY NOT REQUIRED)
FOR ZONE AO AND ZONE A (WITHOUT BFE)

For Zones AO and A (without BFE), complete Items E1–E5. If the Certificate is intended to support a LOMA or LOMR-F request, complete Sections A, B,and C. For Items E1–E4, use natural grade, if available. Check the measurement used. In Puerto Rico only, enter meters.

E1. Provide elevation information for the following and check the appropriate boxes to show whether the elevation is above or below the highest adjacent grade (HAG) and the lowest adjacent grade (LAG).

a) Top of bottom floor (including basement, crawlspace, or enclosure) is _____ . _____ ☐ feet ☐ meters ☐ above or ☐ below the HAG

b) Top of bottom floor (including basement, crawlspace, or enclosure) is _____ . _____ ☐ feet ☐ meters ☐ above or ☐ below the LAG

E2. For Building Diagrams 6-9 with permanent flood openings provided in Section A Items 8 and/or 9 (see pages 8-9 of instructions), the next higher floor (elevation C2.b in the diagrams) of the building is _____ . _____ ☐ feet ☐ meters ☐ above or ☐ below the HAG

E3. Attached garage (top of slab) is _____ . _____ ☐ feet ☐ meters ☐ above or ☐ below the HAG

E4. Top of platform of machinery and/or equipment servicing the building is _____ . _____ ☐ feet ☐ meters ☐ above or ☐ below the HAG

E5. Zone AO only: If no flood depth number is available, is the top of the bottom floor elevated in accordance with the community's floodplain management ordinance?

☐ Yes ☐ No ☒ Unknown. The local official must certify this information in Section G.

SECTION F - PROPERTY OWNER (OR OWNER'S REPRESENTATIVE) CERTIFICATION

The property owner or owner's authorized representative who completes Sections A, B, and E for Zone A (without a FEMA-issued or community-issued BFE) or Zone AO must sign here. *The statements in sections A, B, abd E are correct to the best of my knowledge* .

Property Owner's or Owner's Authorized Representative's Name

Address	City	State	ZIP Code

Signature	Date	Telephone

Comments

☐ Check here if attachments.

ELEVATION CERTIFICATE

OMB No. 1660-0008

Expiration Date: November 30, 2022

IMPORTANT: In these spaces, copy the corresponding information from Section A.			FOR INSURANCE COMPANY USE
Building Street Address (including Apt., Unit, Suite, and/or Bldg. No.) or P.O. Route and Box No. 200 N. Esplanade Drive			Policy Number:
City Miami Springs	State FLORIDA	ZIP Code 33166	Company NAIC Number:

SECTION G - COMMUNITY INFORMATION (OPTIONAL)

The local official who is authorized by law or ordinance to administer the community's floodplain management ordinance can complete Sections A, B, C (or E), and G of this Elevation Certificate. Complete the applicable item(s) and sign below. Check measurement used in items G8 - G10. In Puerto Rico only, enter meters.

G1. ☐ The information in Section C was taken from other documentation that has been signed and sealed by a licensed surveyor, engineer, or architect who is authorized by law to certify elevation information. (Indicate the source and date of the elevation data in the Comments area below.)

G2. ☐ A community official completed Section E for a building located in Zone A (without a FEMA-issued or community-issued BFE) or Zone AO.

G3. ☐ The following information (Items G4-G10) is provided for community floodplain management purposes.

G4. Permit Number	G5. Date Permit Issued	G6. Date Certificate Of Complicance/Occupancy Issued

G7. This permit has been issued for: ☐ New Construction ☐ Substantial Improvement

G8. Elevation of as-built lowest floor (including basement) of the building: _____ . _____ ☐ feet ☐ meters Datum _____

G9. BFE or (in Zone AO) depth of flooding at the building site: _____ . _____ ☐ feet ☐ meters Datum _____

G10. Community's design flood elevation _____ . _____ ☐ feet ☐ meters Datum _____

Local Official's Name	Title
Community Name	Telephone
Signature	Date

Comments

☐ Check here if attachments.

ELEVATION CERTIFICATE

BUILDING PHOTOGRAPHS
See Instructions for Item A6.

OMB No. 1660-0008
Expiration Date: November 30, 2022

IMPORTANT: In these spaces, copy the corresponding information from Section A.			FOR INSURANCE COMPANY USE
Building Street Address (including Apt., Unit, Suite, and/or Bldg. No.) or P.O. Route and Box No. 200 N. Esplanade Drive			Policy Number:
City Miami Springs	State FLORIDA	ZIP Code 33166	Company NAIC Number:

If using the Elevation Certificate to obtain NFIP flood insurance, affix at least 2 building photographs below according to the instructions for Item A6. Identify all photographs with date taken; "Front View" and "Rear View"; and, if required, "Right Side View" and "Left Side View." When applicable, photographs must show the foundation with representative examples of the flood openings or vents, as indicated in Section A8. If submitting more photographs than will fit on this page, use the Continuation Page.

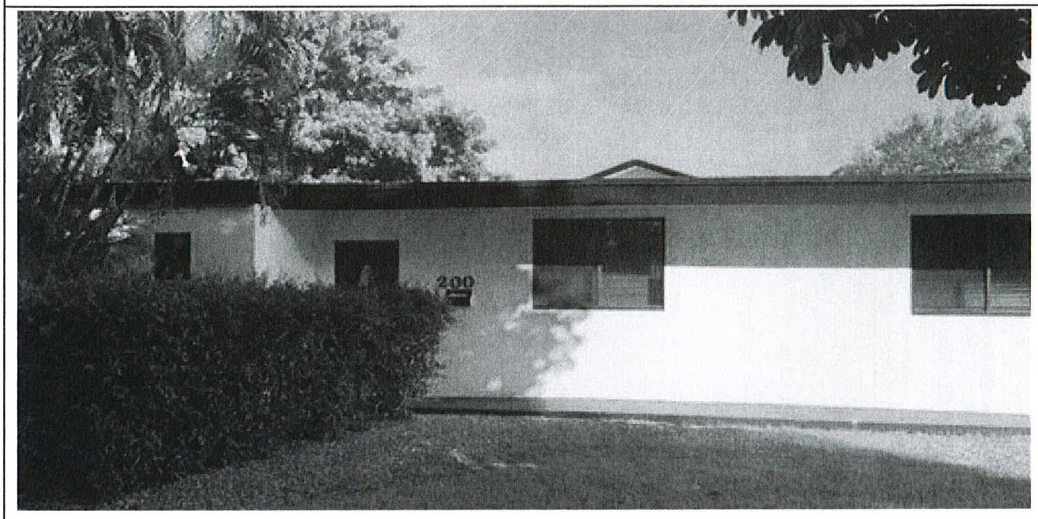

Photo One

Photo One Caption Photo Taken 07/27/2021 "Front View"

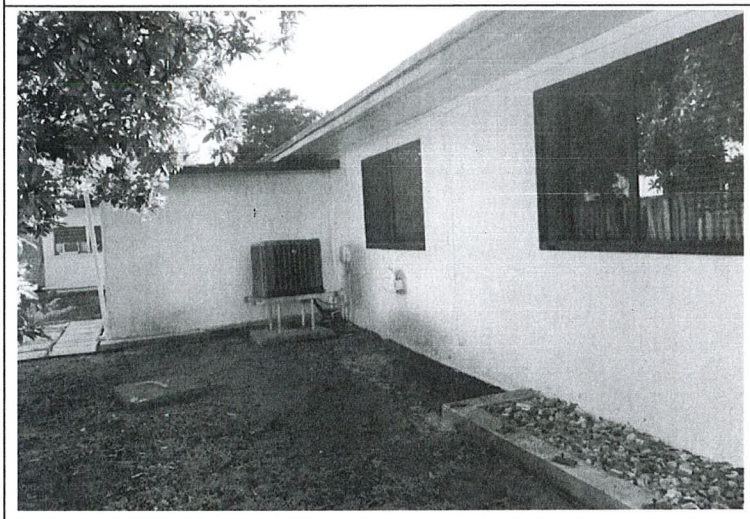

Photo Two

Photo Two Caption Photo Taken 07/27/2021 "Rear View"

ELEVATION CERTIFICATE

BUILDING PHOTOGRAPHS
Continuation Page

OMB No. 1660-0008
Expiration Date: November 30, 2022

IMPORTANT: In these spaces, copy the corresponding information from Section A.			FOR INSURANCE COMPANY USE
Building Street Address (including Apt., Unit, Suite, and/or Bldg. No.) or P.O. Route and Box No. 200 N. Esplanade Drive			Policy Number:
City Miami Springs	State FLORIDA	ZIP Code 33166	Company NAIC Number:

If submitting more photographs than will fit on the preceding page, affix the additional photographs below. Identify all photographs with: date taken; "Front View" and "Rear View"; and, if required, "Right Side View" and "Left Side View." When applicable, photographs must show the foundation with representative examples of the flood openings or vents, as indicated in Section A8.

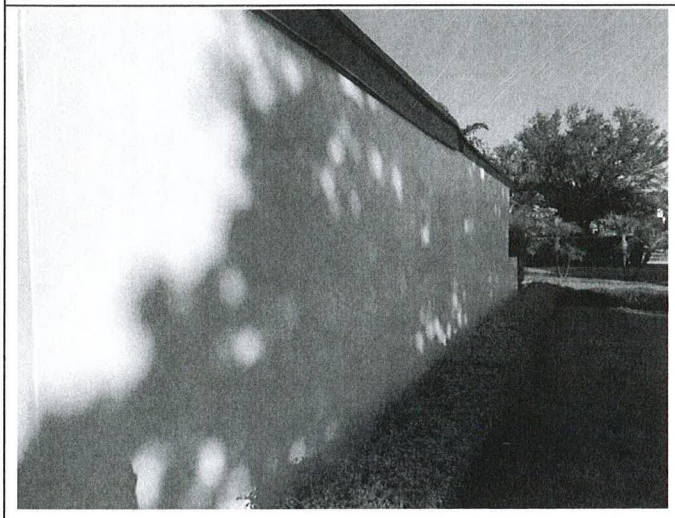

Photo One

Photo One Caption Photo Taken 07/27/2021 "Left View"

Photo Two

Photo Two Caption Photo Taken 07/27/2021 "Right View"

OFFICE COPY
CITY OF MIAMI SPRINGS

CITY OF MIAMI SPRINGS
BUILDING DEPARTMENT
DEC 10 2021
RECEIVED

FORM R405-2020

FLORIDA ENERGY EFFICIENCY CODE FOR BUILDING CONSTRUCTION

Florida Department of Business and Professional Regulation - Residential Performance Method

Project Name:	200 Preval Project	Builder Name:	
Street:	200 N. Esplanade Drive	Permit Office:	Miami Springs Bldg. Dept.
City, State, Zip:	Miami Springs , FL , 33166	Permit Number:	
Owner:	Ambar Preval	Jurisdiction:	232700
Design Location:	FL, Miami	County:	Miami-Dade (Florida Climate Zone 1)

1. New construction or existing	Addition
2. Single family or multiple family	Attached
3. Number of units, if multiple family	1
4. Number of Bedrooms(Bedrms In Addition)	4(2)
5. Is this a worst case?	No
6. Conditioned floor area above grade (ft²)	1907
Conditioned floor area below grade (ft²)	0

7. Windows(215.0 sqft.)	Description	Area
a. U-Factor:	Sgl, U=1.30	121.64 ft²
SHGC:	SHGC=0.50	
b. U-Factor:	Sgl, U=1.20	75.40 ft²
SHGC:	SHGC=0.45	
c. U-Factor:	Dbl, U=1.20	18.00 ft²
SHGC:	SHGC=0.45	
Area Weighted Average Overhang Depth:		4.716 ft.
Area Weighted Average SHGC:		0.478

8. Skylights		Area
c. U-Factor:(AVG)	N/A	ft²
SHGC(AVG):	N/A	

9. Floor Types (1907.0 sqft.)	Insulation	Area
a. Slab-On-Grade Edge Insulation	R=0.0	1907.00 ft²
b. N/A	R=	ft²
c. N/A	R=	ft²

10. Wall Types(1762.6 sqft.)	Insulation	Area
a. Concrete Block - Int Insul, Exterior	R=3.0	1300.50 ft²
b. Concrete Block - Int Insul, Exterior	R=4.1	462.10 ft²
c. N/A	R=	ft²
d. N/A	R=	ft²

11. Ceiling Types (1907.0 sqft.)	Insulation	Area
a. Under Attic (Vented)	R=19.0	1544.00 ft²
b. Under Attic (Vented)	R=30.0	363.00 ft²
c. N/A	R=	ft²

12. Ducts	R	ft²
a. Sup: Attic, Ret: Main, AH: Main	6	365

13. Cooling systems	kBtu/hr	Efficiency
a. Central Unit	57.0	SEER:16.00

14. Heating systems	kBtu/hr	Efficiency
a. Electric Strip Heat	34.0	COP:1.00

15. Hot water systems - Replacement equipment		
a. Electric	Tankless	Cap: 1 gallons
		EF: 0.990
b. Conservation features		
None		
16. Credits		Pstat

Glass/Floor Area: 0.113

Total Proposed Modified Loads: 77.39

Total Baseline Loads: 80.72

PASS

I hereby certify that the plans and specifications covered by this calculation are in compliance with the Florida Energy Code.

PREPARED BY: _____

DATE: 12-4-21

I hereby certify that this building, as designed, is in compliance with the Florida Energy Code.

OWNER/AGENT: _____

DATE: 12-4-21

Review of the plans and specifications covered by this calculation indicates compliance with the Florida Energy Code. Before construction is completed this building will be inspected for compliance with Section 553.908 Florida Statutes.

BUILDING OFFICIAL: _____

DATE: _____

- **Compliance requires certification by the air handler unit manufacturer that the air handler enclosure qualifies as certified factory-sealed in accordance with R403.3.2.1.**
- **Compliance requires an Air Barrier and Insulation Inspection Checklist in accordance with R402.4.1.1 and this project requires an envelope leakage test report with envelope leakage no greater than 5.00 ACH50 (R402.4.1.2).**
- **Compliance with a proposed duct leakage Qn requires a Duct Leakage Test Report confirming duct leakage to outdoors, tested in accordance with ANSI/RESNET/ICC 380, is not greater than 0.030 Qn for whole house.**

FORM R405-2020

INPUT SUMMARY CHECKLIST REPORT

PROJECT

Title:	200 Preval Project	Bedrooms:	4	Address Type:	Street Address
Building Type:	User	Conditioned Area:	1907	Lot #	1 & 2
Owner Name:	Ambar Preval	Total Stories:	1	Block/Subdivision:	58
# of Units:	1	Worst Case:	No	PlatBook:	17, PG 2
Builder Name:		Rotate Angle:	0	Street:	200 N. Esplanade Drive
Permit Office:	Miami Springs Bldg. Dept.	Cross Ventilation:		County:	Miami-Dade
Jurisdiction:	232700	Whole House Fan:		City, State, Zip:	Miami Springs , FL , 33166
Family Type:	Attached				
New/Existing:	Addition				
Comment:					

CLIMATE

√	Design Location	TMY Site	Design Temp 97.5 %	Design Temp 2.5 %	Int Design Temp Winter	Int Design Temp Summer	Heating Degree Days	Design Moisture	Daily Temp Range
_____	FL, Miami	FL_MIAMI_INTL_AP	51	90	70	75	149.5	56	Low

BLOCKS

Number	Name	Area	Volume
1	Block1	1907	15637.4

SPACES

Number	Name	Area	Volume	Kitchen	Occupants	Bedrooms	Infil ID	Finished	Cooled	Heated
1	Main	1544	12660.8	Yes	3	2	1	Yes	Yes	Yes
2	NewSpace2	363	2976.6	No	2	2	1	No	Yes	Yes

FLOORS

√	#	Floor Type	Space	Perimeter	Perimeter R-Value	Area	Joist R-Value	Tile	Wood	Carpet
_____	1	Slab-On-Grade Edge Insulatio	Main	163 ft	0	1544 ft²	----	0.02	0	0.98
_____	2	Slab-On-Grade Edge Insulatio	NewSpace2	56.5 ft	0	363 ft²	----	0.02	0	0.98

ROOF

√	#	Type	Materials	Roof Area	Gable Area	Roof Color	Rad Barr	Solar Absor.	SA Tested	Emitt	Emitt Tested	Deck Insul.	Pitch (deg)
_____	1	Hip	Composition shingles	2066 ft²	0 ft²	Medium	N	0.96	No	0.9	No	0	22.62

ATTIC

√	#	Type	Ventilation	Vent Ratio (1 in)	Area	RBS	IRCC
_____	1	Full attic	Vented	300	1907 ft²	N	N

INPUT SUMMARY CHECKLIST REPORT

CEILING

√	#	Ceiling Type	Space	R-Value	Ins Type	Area	Framing Frac	Truss Type
_____	1	Under Attic (Vented)	Main	19	Blown	1544 ft²	0.11	Wood
_____	2	Under Attic (Vented)	NewSpace2	30	Blown	363 ft²	0.11	Wood

WALLS

√	#	Ornt	Adjacent To	Wall Type	Space	Cavity R-Value	Width Ft	Width In	Height Ft	Height In	Area	Sheathing R-Value	Framing Fraction	Solar Absor.	Below Grade%
____	1	SW	Exterior	Concrete Block - Int Insul	NewSpace2	4.0999	1	5	8	2	11.6 ft²		0	0.75	0
____	2	NW	Exterior	Concrete Block - Int Insul	NewSpace2	4.0999	10	11	8	2	89.2 ft²		0	0.75	0
____	3	NE	Exterior	Concrete Block - Int Insul	NewSpace2	4.0999	33	4	8	2	272.2 ft²		0	0.75	0
____	4	SE	Exterior	Concrete Block - Int Insul	NewSpace2	4.0999	10	11	8	2	89.2 ft²		0	0.75	0
____	5	SE	Exterior	Concrete Block - Int Insul	Main	3	36	6	8	2	298.1 ft²		0	0.75	0
____	6	NE	Exterior	Concrete Block - Int Insul	Main	3	5	4	8	2	43.6 ft²		0	0.75	0
____	7	SE	Exterior	Concrete Block - Int Insul	Main	3	14	8	8	2	119.8 ft²		0	0.75	0
____	8	SW	Exterior	Concrete Block - Int Insul	Main	3	5	4	8	2	43.6 ft²		0	0.75	0
____	9	SE	Exterior	Concrete Block - Int Insul	Main	3	5	4	8	2	43.6 ft²		0	0.75	0
____	10	SW	Exterior	Concrete Block - Int Insul	Main	3	14	6	8	2	118.4 ft²		0	0.75	0
____	11	NW	Exterior	Concrete Block - Int Insul	Main	3	26	10	8	2	219.1 ft²		0	0.75	0
____	12	SW	Exterior	Concrete Block - Int Insul	Main	3	17	5	8	2	142.2 ft²		0	0.75	0
____	13	NW	Exterior	Concrete Block - Int Insul	Main	3	33	4	8	2	272.2 ft²		0	0.75	0

WINDOWS

Orientation shown is the entered, Proposed orientation.

√	#	Ornt	Wall ID	Frame	Panes	NFRC	U-Factor	SHGC	Imp	Area	Overhang Depth	Overhang Separation	Int Shade	Screening
_____	1	NE	3	Metal	Single (Clear)	Yes	1.2	0.45	Y	18.4 ft²	2 ft 0 in	1 ft 2 in	None	None
_____	2	SE	4	Metal	Single (Clear)	Yes	1.3	0.5	Y	18.4 ft²	2 ft 0 in	1 ft 1 in	None	None
_____	3	SE	5	Metal	Single (Clear)	Yes	1.3	0.5	N	18.0 ft²	2 ft 0 in	1 ft 5 in	None	None
_____	4	SE	5	Metal	Single (Clear)	Yes	1.3	0.5	Y	40.0 ft²	2 ft 0 in	1 ft 1 in	None	None
_____	5	SE	7	Metal	Single (Clear)	Yes	1.3	0.5	N	5.2 ft²	2 ft 0 in	1 ft 5 in	None	None
_____	6	NW	11	Metal	Double (Tinted)	Yes	1.2	0.45	Y	18.0 ft²	10 ft 0 in	1 ft 5 in	None	None
_____	7	NW	11	Metal	Single (Clear)	Yes	1.2	0.45	Y	6.0 ft²	10 ft 0 in	1 ft 5 in	None	None
_____	8	NW	11	Metal	Single (Clear)	Yes	1.2	0.45	Y	9.0 ft²	10 ft 0 in	1 ft 5 in	None	None
_____	9	SW	12	Metal	Single (Clear)	Yes	1.3	0.5	Y	40.0 ft²	10 ft 0 in	1 ft 5 in	None	None
_____	10	NW	13	Metal	Single (Clear)	Yes	1.2	0.45	Y	18.0 ft²	2 ft 0 in	1 ft 5 in	None	None
_____	11	NW	13	Metal	Single (Clear)	Yes	1.2	0.45	Y	24.0 ft²	2 ft 0 in	1 ft 5 in	None	None

INFILTRATION

#	Scope	Method	SLA	CFM 50	ELA	EqLA	ACH	ACH 50
1	Wholehouse	Proposed ACH(50)	.00026	1303.1	71.49	134.22	.1068	5

FORM R405-2020

INPUT SUMMARY CHECKLIST REPORT

HEATING SYSTEM

√	#	System Type	Subtype	Speed	Efficiency	Capacity	Block	Ducts
_____	1	Electric Strip Heat/Replaceme	None		COP:1	34 kBtu/hr	1	sys#1

COOLING SYSTEM

√	#	System Type	Subtype	Subtype	Efficiency	Capacity	Air Flow	SHR	Block	Ducts
_____	1	Central Unit/Replacement for	Split	Singl	SEER: 16	57 kBtu/hr	1710 cfm	0.75	1	sys#1

HOT WATER SYSTEM

√	#	System Type	SubType	Location	EF	Cap	Use	SetPnt	Conservation
_____	1	Electric	Tankless	Main	0.99	1 gal	70 gal	120 deg	None

SOLAR HOT WATER SYSTEM

√	FSEC Cert #	Company Name	System Model #	Collector Model #	Collector Area	Storage Volume	FEF
_____	None	None			ft²		

DUCTS

√	#	--- Supply --- Location	R-Value	Area	--- Return --- Location	Area	Leakage Type	Air Handler	CFM 25 TOT	CFM25 OUT	QN	RLF	HVAC # Heat	Cool
_____	1	Attic	6	365 ft²	Main	90 ft²	Prop. Leak Free	Main	--- cfm	57.2 cfm	0.03	0.50	1	1

TEMPERATURES

Programable Thermostat: Y

Ceiling Fans:

	Jan	Feb	Mar	Apr	May	Jun	Jul	Aug	Sep	Oct	Nov	Dec
Cooling	[ ]	[ ]	[ ]	[ ]	[ ]	[X]	[X]	[X]	[X]	[ ]	[ ]	[ ]
Heating	[X]	[X]	[X]	[ ]	[ ]	[ ]	[ ]	[ ]	[ ]	[ ]	[X]	[X]
Venting	[ ]	[ ]	[X]	[X]	[ ]	[ ]	[ ]	[ ]	[ ]	[X]	[X]	[ ]

Thermostat Schedule: HERS 2006 Reference

Schedule Type		Hours 1	2	3	4	5	6	7	8	9	10	11	12
Cooling (WD)	AM	78	78	78	78	78	78	78	78	80	80	80	80
	PM	80	80	78	78	78	78	78	78	78	78	78	78
Cooling (WEH)	AM	78	78	78	78	78	78	78	78	78	78	78	78
	PM	78	78	78	78	78	78	78	78	78	78	78	78
Heating (WD)	AM	66	66	66	66	66	68	68	68	68	68	68	68
	PM	68	68	68	68	68	68	68	68	68	68	66	66
Heating (WEH)	AM	66	66	66	66	66	68	68	68	68	68	68	68
	PM	68	68	68	68	68	68	68	68	68	68	66	66

MASS

Mass Type	Area	Thickness	Furniture Fraction	Space
Default(8 lbs/sq.ft.	0 ft²	0 ft	0.3	Main
Default(8 lbs/sq.ft.	0 ft²	0 ft	0.3	NewSpace2

2020 - AIR BARRIER AND INSULATION INSPECTION COMPONENT CRITERIA

TABLE 402.4.1.1
AIR BARRIER AND INSULATION INSPECTION COMPONENT CRITERIA [a]

				CHECK
Project Name:	200 Preval Project	Builder Name:		
Street:	200 N. Esplanade Drive	Permit Office:	Miami Springs Bldg. Dept.	
City, State, Zip:	Miami Springs , FL , 33166	Permit Number:		
Owner:	Ambar Preval	Jurisdiction:	232700	
Design Location:	FL, Miami			

COMPONENT	AIR BARRIER CRITERIA	INSULATION INSTALLATION CRITERIA	
General requirements	A continuous air barrier shall be installed in the building envelope. The exterior thermal envelope contains a continuous air barrier. Breaks or joints in the air barrier shall be sealed.	Air-permeable insulation shall not be used as a sealing material.	
Ceiling/attic	The air barrier in any dropped ceiling/soffit shall be aligned with the insulation and any gaps in the air barrier shall be sealed. Access openings, drop down stairs or knee wall doors to unconditioned attic spaces shall be sealed.	The insulation in any dropped ceiling/soffit shall be aligned with the air barrier.	
Walls	The junction of the foundation and sill plate shall be sealed. The junction of the top plate and the top of exterior walls shall be sealed. Knee walls shall be sealed.	Cavities within corners and headers of frame walls shall be insulated by completely filling the cavity with a material having a thermal resistance of R-3 per inch minimum. Exterior thermal envelope insulation for framed walls shall be installed in substantial contact and continuous alignment with the air barrier.	
Windows, skylights and doors	The space between window/door jambs and framing, and skylights and framing shall be sealed.		✓
Rim joists	Rim joists shall include the air barrier.	Rim joists shall be insulated.	
Floors (including above-garage and cantilevered floors)	The air barrier shall be installed at any exposed edge of insulation.	Floor framing cavity insulation shall be installed to maintain permanent contact with the underside of subfloor decking, or floor framing cavity insulation shall be permitted to be in contact with the top side of sheathing, or continuous insulation installed on the underside of floor framing and extends from the bottom to the top of all perimeter floor framing members.	✓
Crawl space walls	Exposed earth in unvented crawl spaces shall be covered with a Class I vapor retarder with overlapping joints taped.	Where provided instead of floor insulation, insulation shall be permanently attached to the crawlspace walls.	
Shafts, penetrations	Duct shafts, utility penetrations, and flue shafts opening to exterior or unconditioned space shall be sealed.		
Narrow cavities		Batts in narrow cavities shall be cut to fit, or narrow cavities shall be filled by insulation that on installation readily conforms to the available cavity spaces.	
Garage separation	Air sealing shall be provided between the garage and conditioned spaces.		
Recessed lighting	Recessed light fixtures installed in the building thermal envelope shall be sealed to the finished surface.	Recessed light fixtures installed in the building thermal envelope shall be air tight and IC rated.	✓
Plumbing and wiring		Batt insulation shall be cut neatly to fit around wiring and plumbing in exterior walls, or insulation that on installation readily conforms to available space shall extend behind piping and wiring.	✓
Shower/tub on exterior wall	The air barrier installed at exterior walls adjacent to showers and tubs shall separate them from the showers and tubs.	Exterior walls adjacent to showers and tubs shall be insulated.	✓
Electrical/phone box on exterior walls	The air barrier shall be installed behind electrical or communication boxes or air-sealed boxes shall be installed.		✓
HVAC register boots	HVAC supply and return register boots that penetrate building thermal envelope shall be sealed to the sub-floor, wall covering or		✓
Concealed sprinklers	When required to be sealed, concealed fire sprinklers shall only be sealed in a manner that is recommended by the manufacturer. Caulking or other adhesive sealants shall not be used to fill voids between fire sprinkler cover plates and walls or ceilings.		

a. In addition, inspection of log walls shall be in accordance with the provisions of ICC-400.

FORM R405-2020

ENERGY PERFORMANCE LEVEL (EPL) DISPLAY CARD

ESTIMATED ENERGY PERFORMANCE INDEX* = 96

The lower the EnergyPerformance Index, the more efficient the home.

200 N. Esplanade Drive, Miami Springs, FL, 33166

1. New construction or existing	Addition
2. Single family or multiple family	Attached
3. Number of units, if multiple family	1
4. Number of Bedrooms	4(2)
5. Is this a worst case?	No
6. Conditioned floor area (ft²)	1907

7. Windows**	Description	Area
a. U-Factor:	Sgl, U=1.30	121.64 ft²
SHGC:	SHGC=0.50	
b. U-Factor:	Sgl, U=1.20	75.40 ft²
SHGC:	SHGC=0.45	
c. U-Factor:	Dbl, U=1.20	18.00 ft²
SHGC:	SHGC=0.45	
d. U-Factor:	N/A	ft²
SHGC:		
Area Weighted Average Overhang Depth:		4.716 ft.
Area Weighted Average SHGC:		0.478

8. Skylights	Description	Area
a. U-Factor(AVG):	N/A	ft²
SHGC(AVG):	N/A	

9. Floor Types	Insulation	Area
a. Slab-On-Grade Edge Insulation	R=0.0	1907.00 ft²
b. N/A	R=	ft²
c. N/A	R=	ft²

10. Wall Type and Insulation	Insulation	Area
a. Concrete Block - Int Insul, Exterior	R=3.0	1300.50 ft²
b. Concrete Block - Int Insul, Exterior	R=4.1	462.10 ft²
c. N/A	R=	ft²
d. N/A	R=	ft²

11. Ceiling Type and insulation level	Insulation	Area
a. Under Attic (Vented)	R=19.0	1544.00 ft²
b. Under Attic (Vented)	R=30.0	363.00 ft²
c. N/A	R=	ft²

12. Ducts, location & insulation level	R	ft²
a. Sup: Attic, Ret: Main, AH: Main	6	365

13. Cooling systems	kBtu/hr	Efficiency
a. Central Unit	57.0	SEER:16.00

14. Heating systems	kBtu/hr	Efficiency
a. Electric Strip Heat	34.0	COP:1.00

15. Hot water systems - Replacement equipment	
a. Electric	Cap: 1 gallons EF: 0.99
b. Conservation features None	
Credits (Performance method)	Pstat

@ it's DESIGN STAGE

I certify that this home has complied with the Florida Energy Efficiency Code for Building Construction through the above energy saving features which will be installed (or exceeded) in this home before final inspection. Otherwise, a new EPL Display Card will be completed based on installed Code compliant features.

Builder Signature: _____ Date: 12-4-21

Address of New Home: 200 N. Esplanade Dr. City/FL Zip: Miami Springs FL 33166

GREAT SEAL OF THE STATE OF FLORIDA * IN GOD WE TRUST *

*Note: This is not a Building Energy Rating. If your Index is below 70, your home may qualify for energy efficient mortgage (EEM) incentives if you obtain a Florida Energy Rating. For information about the Florida Building Code, Energy Conservation, contact the Florida Building Commission's support staff.

**Label required by Section R303.1.3 of the Florida Building Code, Energy Conservation, if not DEFAULT.

Residential System Sizing Calculation

Summary

Ambar Preval
200 N. Esplanade Drive
Miami Springs, FL 33166

Project Title:
200 Preval Project

12/1/2021

Location for weather data: Miami, FL - Defaults: Latitude(26) Altitude(30 ft.) Temp Range(L) Humidity data: Interior RH (50%) Outdoor wet bulb (82F) Humidity difference(57gr.)					
Winter design temperature(MJ8 99%)	52	F	Summer design temperature(MJ8 99%)	112	F
Winter setpoint	70	F	Summer setpoint	75	F
Winter temperature difference	18	F	Summer temperature difference	37	F
Total heating load calculation	**19568**	**Btuh**	**Total cooling load calculation**	**51040**	**Btuh**
Submitted heating capacity	% of calc	Btuh	Submitted cooling capacity	% of calc	Btuh
Total (Electric Strip Heat)	173.8	34000	Sensible (SHR = 0.75)	95.0	42750
			Latent	235.9	14250
			Total	111.7	57000

WINTER CALCULATIONS

Winter Heating Load (for 1907 sqft)

Load component			Load	
Window total	215	sqft	4864	Btuh
Wall total	1548	sqft	4749	Btuh
Door total	0	sqft	0	Btuh
Ceiling total	1907	sqft	1570	Btuh
Floor total	See detail report		4662	Btuh
Infiltration	45	cfm	881	Btuh
Duct loss			2841	Btuh
Subtotal			**19568**	**Btuh**
Ventilation	0	cfm	0	Btuh
TOTAL HEAT LOSS			**19568**	**Btuh**

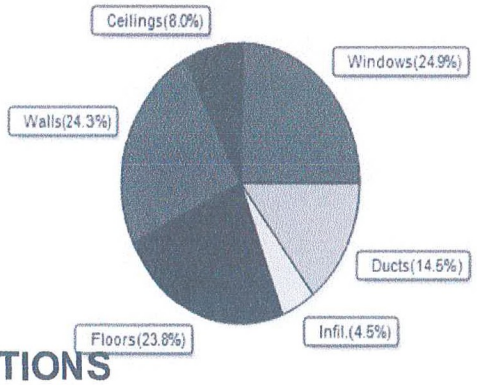

SUMMER CALCULATIONS

Summer Cooling Load (for 1907 sqft)

Load component			Load	
Window total	215	sqft	15072	Btuh
Wall total	1548	sqft	10897	Btuh
Door total	0	sqft	0	Btuh
Ceiling total	1907	sqft	5758	Btuh
Floor total			0	Btuh
Infiltration	33	cfm	1358	Btuh
Internal gain			8150	Btuh
Duct gain			3766	Btuh
Sens. Ventilation	0	cfm	0	Btuh
Blower Load			0	Btuh
Total sensible gain			**45001**	**Btuh**
Latent gain(ducts)			447	Btuh
Latent gain(infiltration)			1293	Btuh
Latent gain(ventilation)			0	Btuh
Latent gain(internal/occupants/other)			4300	Btuh
Total latent gain			**6040**	**Btuh**
TOTAL HEAT GAIN			**51040**	**Btuh**

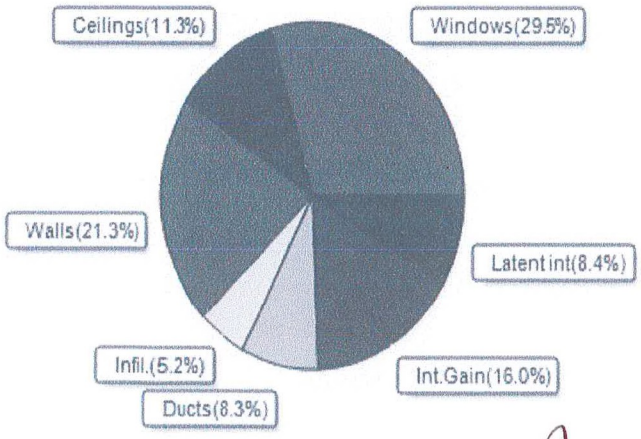

Powered by ACCA MANUAL J 8th Edition

EnergyGauge® System Sizing
PREPARED BY:
DATE: 12-4-21

System Sizing Calculations - Summer

Residential Load - Room by Room Component Details

Ambar Preval
200 N. Esplanade Drive
Miami Springs, FL 33166

Project Title:
200 Preval Project

12/1/2021

Reference City: Miami, FL Temperature Difference: 37.0F(MJ8 99%) Humidity difference: 57gr.

Component Loads for Room #1: Main

Window	Type* Panes	SHGC	U	InSh	IS	Ornt	Overhang Len	Hgt	Window Area(sqft) Gross	Shaded	Unshaded	HTM Shaded	Unshaded	Load
3	1 NFRC	0.50	1.30	No	No	SE	2.0ft	1.4ft	18.0	13.6	4.4	59	83	1167 Btuh
4	1 NFRC	0.50	1.30	No	No	SE	2.0ft	1.1ft	40.0	15.6	24.4	59	83	2942 Btuh
5	1 NFRC	0.50	1.30	No	No	SE	2.0ft	1.4ft	5.2	5.2	0.0	59	83	309 Btuh
6	2 NFRC	0.45	1.20	No	No	NW	10.0f	1.4ft	18.0	0.0	18.0	54	75	1358 Btuh
7	1 NFRC	0.45	1.20	No	No	NW	10.0f	1.4ft	6.0	0.0	6.0	54	75	453 Btuh
8	1 NFRC	0.45	1.20	No	No	NW	10.0f	1.4ft	9.0	0.0	9.0	54	75	679 Btuh
9	1 NFRC	0.50	1.30	No	No	SW	10.0f	1.4ft	40.0	40.0	0.0	59	83	2357 Btuh
10	1 NFRC	0.45	1.20	No	No	NW	2.0ft	1.4ft	18.0	0.0	18.0	54	75	1358 Btuh
11	1 NFRC	0.45	1.20	No	No	NW	2.0ft	1.4ft	24.0	0.0	24.0	54	75	1810 Btuh
	Window Total								178 (sqft)					12433 Btuh

Walls	Type	U-Value	R-Value Cav/Sheath	Area(sqft)	HTM	Load
5	Concrete Blk,Hollow - Ext	0.18	3.0/0.0	240.1	7.4	1770 Btuh
6	Concrete Blk,Hollow - Ext	0.18	3.0/0.0	43.6	7.4	321 Btuh
7	Concrete Blk,Hollow - Ext	0.18	3.0/0.0	114.5	7.4	845 Btuh
8	Concrete Blk,Hollow - Ext	0.18	3.0/0.0	43.6	7.4	321 Btuh
9	Concrete Blk,Hollow - Ext	0.18	3.0/0.0	43.6	7.4	321 Btuh
10	Concrete Blk,Hollow - Ext	0.18	3.0/0.0	118.4	7.4	873 Btuh
11	Concrete Blk,Hollow - Ext	0.18	3.0/0.0	186.1	7.4	1373 Btuh
12	Concrete Blk,Hollow - Ext	0.18	3.0/0.0	102.2	7.4	754 Btuh
13	Concrete Blk,Hollow - Ext	0.18	3.0/0.0	230.2	7.4	1698 Btuh
	Wall Total			1122 (sqft)		8276 Btuh

Ceilings	Type/Color/Surface	U-Value	R-Value	Area(sqft)	HTM	Load
1	Vented Attic/Light/Shingle	0.049	19.0/0.0	1544.0	3.24	4995 Btuh
	Ceiling Total			1544 (sqft)		4995 Btuh

Floors	Type	R-Value	Size	HTM	Load
1	Slab On Grade	0.0	1544 (ft-perimeter)	0.0	0 Btuh
	Floor Total		1544.0 (sqft)		0 Btuh
				Zone Envelope Subtotal:	25704 Btuh

Infiltration	Type	Wholehouse ACH	Volume(cuft)	Wall Ratio	CFM=	Load
	Natural	0.13	12661	0.73	24.2	985 Btuh
Internal gain		Occupants	Btuh/occupant		Appliance	Load
		3	X 230	+	4600	5290 Btuh
					Sensible Envelope Load:	31978 Btuh
Duct load	Extremely sealed, Supply(R6.0-Attic), Return(R6.0-Cond.)				(DGM of 0.091)	2921 Btuh
					Sensible Zone Load	**34899 Btuh**

Manual J Summer Calculations

Residential Load - Component Details (continued)

Ambar Preval
200 N. Esplanade Drive
Miami Springs, FL 33166

Project Title:
200 Preval Project

Climate:FL_MIAMI_INTL_AP

12/1/2021

Component Loads for Room #2: NewSpace2

Window	Type*					Overhang		Window Area(sqft)			HTM		Load
	Panes	SHGC	U	InSh	IS	Ornt	Len	Hgt	Gross	Shaded	Unshaded	Shaded	Unshaded	
1	1 NFRC	0.45,	1.20	No	No	NE	2.0ft	1.2ft	18.4	0.0	18.4	54	75	1388 Btuh
2	1 NFRC	0.50,	1.30	No	No	SE	2.0ft	1.1ft	18.4	11.5	7.0	59	83	1251 Btuh
	Window Total								37 (sqft)					2639 Btuh

Walls	Type	U-Value	R-Value Cav/Sheath	Area(sqft)	HTM	Load
1	Concrete Blk,Hollow - Ext	0.15	4.1/0.0	11.6	6.2	71 Btuh
2	Concrete Blk,Hollow - Ext	0.15	4.1/0.0	89.2	6.2	549 Btuh
3	Concrete Blk,Hollow - Ext	0.15	4.1/0.0	253.8	6.2	1564 Btuh
4	Concrete Blk,Hollow - Ext	0.15	4.1/0.0	70.8	6.2	436 Btuh
	Wall Total			425 (sqft)		2621 Btuh
Ceilings	Type/Color/Surface	U-Value	R-Value	Area(sqft)	HTM	Load
2	Vented Attic/Light/Shingle	0.032	30.0/0.0	363.0	2.10	763 Btuh
	Ceiling Total			363 (sqft)		763 Btuh
Floors	Type		R-Value	Size	HTM	Load
2	Slab On Grade		0.0	363 (ft-perimeter)	0.0	0 Btuh
	Floor Total			363.0 (sqft)		0 Btuh
				Zone Envelope Subtotal:		6023 Btuh

Infiltration	Type	Wholehouse ACH	Volume(cuft)	Wall Ratio		CFM=	Load
	Natural	0.13	2977	0.27		9.2	373 Btuh
Internal gain		Occupants	Btuh/occupant			Appliance	Load
		2	X 230	+		2400	2860 Btuh
					Sensible Envelope Load:		9256 Btuh
Duct load	Extremely sealed, Supply(R6.0-Attic), Return(R6.0-Cond.)				(DGM of 0.091)		845 Btuh
					Sensible Zone Load		**10102 Btuh**

Manual J Summer Calculations

Residential Load - Component Details (continued)

Ambar Preval
200 N. Esplanade Drive
Miami Springs, FL 33166

Project Title:
200 Preval Project

Climate:FL_MIAMI_INTL_AP

12/1/2021

WHOLE HOUSE TOTALS

Whole House Totals for Cooling	**Sensible Envelope Load All Zones**	**41235 Btuh**
	Sensible Duct Load	3766 Btuh
	Total Sensible Zone Loads	**45001 Btuh**
	Sensible ventilation	0 Btuh
	Blower	0 Btuh
	Total sensible gain	**45001 Btuh**
	Latent infiltration gain (for 57 gr. humidity difference)	1293 Btuh
	Latent ventilation gain	0 Btuh
	Latent duct gain	447 Btuh
	Latent occupant gain (5.0 people @ 200 Btuh per person)	1000 Btuh
	Latent other gain	3300 Btuh
	Latent total gain	**6040 Btuh**
	TOTAL GAIN	**51040 Btuh**

EQUIPMENT

1. Central Unit	#	57000 Btuh

*Key: Window types (Panes - Number and type of panes of glass)
(SHGC - Shading coefficient of glass as SHGC numerical value)
(U - Window U-Factor)
(InSh - Interior shading device: none(No), Blinds(B), Draperies(D) or Roller Shades(R))
- For Blinds: Assume medium color, half closed
For Draperies: Assume medium weave, half closed
For Roller shades: Assume translucent, half closed
(IS - Insect screen: none(N), Full(F) or Half(½))
(Ornt - compass orientation)

Powered by ACCA MANUAL J

Version 8

System Sizing Calculations - Winter

Residential Load - Room by Room Component Details

Ambar Preval
200 N. Esplanade Drive
Miami Springs, FL 33166

Project Title:
200 Preval Project
Building Type: User

12/1/2021

Reference City: Miami, FL (Defaults) Winter Temperature Difference: 18.0 F (MJ8 99%)

Component Loads for Room #1: Main

Window	Panes/Type	Frame	U	Orientation	Area(sqft) X	HTM=	Load
3	1, NFRC 0.50	Metal	1.30	SE	18.0	23.4	421 Btuh
4	1, NFRC 0.50	Metal	1.30	SE	40.0	23.4	936 Btuh
5	1, NFRC 0.50	Metal	1.30	SE	5.2	23.4	123 Btuh
6	2, NFRC 0.45	Metal	1.20	NW	18.0	21.6	389 Btuh
7	1, NFRC 0.45	Metal	1.20	NW	6.0	21.6	130 Btuh
8	1, NFRC 0.45	Metal	1.20	NW	9.0	21.6	194 Btuh
9	1, NFRC 0.50	Metal	1.30	SW	40.0	23.4	936 Btuh
10	1, NFRC 0.45	Metal	1.20	NW	18.0	21.6	389 Btuh
11	1, NFRC 0.45	Metal	1.20	NW	24.0	21.6	518 Btuh
	Window Total				178.2(sqft)		4036 Btuh

Walls	Type	Ornt.	Ueff.	R-Value (Cav/Sh)	Area X	HTM=	Load
5	Conc Blk,Hollow	- Ext	(0.179)	3.0/0.0	240	3.21	772 Btuh
6	Conc Blk,Hollow	- Ext	(0.179)	3.0/0.0	44	3.21	140 Btuh
7	Conc Blk,Hollow	- Ext	(0.179)	3.0/0.0	115	3.21	368 Btuh
8	Conc Blk,Hollow	- Ext	(0.179)	3.0/0.0	44	3.21	140 Btuh
9	Conc Blk,Hollow	- Ext	(0.179)	3.0/0.0	44	3.21	140 Btuh
10	Conc Blk,Hollow	- Ext	(0.179)	3.0/0.0	118	3.21	381 Btuh
11	Conc Blk,Hollow	- Ext	(0.179)	3.0/0.0	186	3.21	598 Btuh
12	Conc Blk,Hollow	- Ext	(0.179)	3.0/0.0	102	3.21	329 Btuh
13	Conc Blk,Hollow	- Ext	(0.179)	3.0/0.0	230	3.21	740 Btuh
	Wall Total				1122(sqft)		3607 Btuh

Ceilings	Type/Color/Surface	Ueff.	R-Value	Area X	HTM=	Load
1	Vented Attic/L/Shing	(0.049)	19.0/0.0	1544	0.9	1362 Btuh
	Ceiling Total			1544(sqft)		1362Btuh

Floors	Type	Ueff.	R-Value	Size X	HTM=	Load
1	Slab On Grade	(1.180)	0.0	163.0 ft(perim.)	21.2	3462 Btuh
	Floor Total			1544 sqft		3462 Btuh

	Room Envelope Subtotal:	12467 Btuh

Infiltration	Type	Wholehouse ACH	Room Volume	Wall Ratio	CFM=	
	Natural	0.17	12661	0.73	32.3	639 Btuh

Duct load	Extremely sealed, Supply(R6.0-Attic), Return(R6.0-Cond.)	(DLM of 0.170)	2226 Btuh

Room #1	**Sensible Room Subtotal**	**15332 Btuh**

Manual J Winter Calculations

Residential Load - Component Details (continued)

Ambar Preval
200 N. Esplanade Drive
Miami Springs, FL 33166

Project Title:
200 Preval Project
Building Type: User

12/1/2021

Component Loads for Room #2: NewSpace2

Window	Panes/Type	Frame	U	Orientation	Area(sqft) X	HTM=	Load
1	1, NFRC 0.45	Metal	1.20	NE	18.4	21.6	398 Btuh
2	1, NFRC 0.50	Metal	1.30	SE	18.4	23.4	431 Btuh
	Window Total				36.8(sqft)		828 Btuh

Walls	Type	Ornt.	Ueff.	R-Value (Cav/Sh)	Area X	HTM=	Load
1	Conc Blk,Hollow	- Ext	(0.149)	4.1/0.0	12	2.69	31 Btuh
2	Conc Blk,Hollow	- Ext	(0.149)	4.1/0.0	89	2.69	239 Btuh
3	Conc Blk,Hollow	- Ext	(0.149)	4.1/0.0	254	2.69	682 Btuh
4	Conc Blk,Hollow	- Ext	(0.149)	4.1/0.0	71	2.69	190 Btuh
	Wall Total				425(sqft)		1142 Btuh

Ceilings	Type/Color/Surface	Ueff.	R-Value	Area X	HTM=	Load
2	Vented Attic/L/Shing	(0.032)	30.0/0.0	363	0.6	208 Btuh
	Ceiling Total			363(sqft)		208Btuh

Floors	Type	Ueff.	R-Value	Size X	HTM=	Load
2	Slab On Grade	(1.180)	0.0	56.5 ft(perim.)	21.2	1200 Btuh
	Floor Total			363 sqft		1200 Btuh

	Room Envelope Subtotal:	3379 Btuh

Infiltration	Type	Wholehouse ACH	Room Volume	Wall Ratio	CFM=	
	Natural	0.17	2977	0.27	12.2	242 Btuh

Duct load	Extremely sealed, Supply(R6.0-Attic), Return(R6.0-Cond.) (DLM of 0.170)	615 Btuh
Room #2	**Sensible Room Subtotal**	**4236 Btuh**

WHOLE HOUSE TOTALS

Totals for Heating	Subtotal Sensible Heat Loss	19568 Btuh
	Ventilation Sensible Heat Loss	0 Btuh
	Total Heat Loss	19568 Btuh

Manual J Winter Calculations

Residential Load - Component Details (continued)

Ambar Preval
200 N. Esplanade Drive
Miami Springs, FL 33166

Project Title:
200 Preval Project
Building Type: User

12/1/2021

EQUIPMENT		
1. Electric Strip Heat		34000 Btuh

Key: Window types - NFRC (Requires U-Factor and Shading coefficient(SHGC) of glass as numerical values)
or - Glass as 'Clear' or 'Tint' (Uses U-Factor and SHGC defaults)
U - (Window U-Factor)
HTM - (ManualJ Heat Transfer Multiplier)

Powered by ACCA MANUAL J

Version 8

RESIDENTIAL ENERGY CONSERVATION CODE DOCUMENTATION CHECKLIST

Florida Department of Business and Professional Regulation
Simulated Performance Alternative (Performance) Method

Applications for compliance with the 2020 Florida Building Code, Energy Conservation via the Residential Simulated Performance Alternative shall include:

- ☑ *This checklist*
- ☑ *Form R405-2020 report*
- ☑ *Input summary checklist that can be used for field verification (usually four pages/may be greater)*
- ☑ *Energy Performance Level (EPL) Display Card (one page)*
- ☑ *HVAC system sizing and selection based on ACCA Manual S or per exceptions provided in Section R403.7*
- ☑ *Mandatory Requirements (five pages)*

Required prior to CO:

- ☐ *Air Barrier and Insulation Inspection Component Criteria checklist (Table R402.4.1.1 - one page)*
- ☐ *A completed 2020 Envelope Leakage Test Report (usually one page); exception in R402.4 allows dwelling units of R-2 Occupancies and multiple attached single family dwellings to comply with Section C402.5*
  Testing is not required for additions in which the new construction is less than 85% of the thermal envelope. (R402.4.1.2, Florida Energy Code)
- ☐ *If Form R405 duct leakage type indicates anything other than "default leakage", then a completed 2020 Duct Leakage Test Report - Performance Method (usually one page)*

Envelope Leakage Test Report (Blower Door Test)
Residential Prescriptive, Performance or ERI Method Compliance
2020 Florida Building Code, Energy Conservation, 7th Edition

Jurisdiction: 232700	Permit #:

Job Information

Builder: Community: Lot: NA

Address: 200 N. Esplanade Drive

City: Miami Springs State: FL Zip: 33166

Air Leakage Test Results *Passing results must meet either the Performance, Prescriptive, or ERI Method*

○ **PRESCRIPTIVE METHOD**-The building or dwelling unit shall be tested and verified as having an air leakage rate of not exceeding 7 air changes per hour at a pressure of 0.2 inch w.g. (50 Pascals) in Climate Zones 1 and 2.

○ **PERFORMANCE or ERI METHOD**-The building or dwelling unit shall be tested and verified as having an air leakage rate of not exceeding the selected ACH(50) value, as shown on Form R405-2020 (Performance) or R406-2020 (ERI), section labeled as infiltration, sub-section ACH50.

ACH(50) specified on Form R405-2020-Energy Calc (Performance) or R406-2020 (ERI): 5.000

_____ x 60 ÷ 15637 = _____
CFM(50) Building Volume ACH(50)

☐ **PASS**

☐ When ACH(50) is less than 3, Mechanical Ventilation installation must be verified by building department.

Method for calculating building volume:

○ Retrieved from architectural plans

● Code software calculated

○ Field measured and calculated

R402.4.1.2 Testing. Testing shall be conducted in accordance with ANSI/RESNET/ICC 380 and reported at a pressure of 0.2 inch w.g. (50 Pascals). Testing shall be conducted by either individuals as defined in Section 553.993(5) or (7), *Florida Statues*.or individuals licensed as set forth in Section 489.105(3)(f), (g), or (i) or an approved third party. A written report of the results of the test shall be signed by the party conducting the test and provided to the*code official*. Testing shall be performed at any time after creation of all penetrations of the *building thermal envelope*.

During testing:
1. Exterior windows and doors, fireplace and stove doors shall be closed, but not sealed, beyond the intended weatherstripping or other infiltration control measures.
2. Dampers including exhaust, intake, makeup air, back draft and flue dampers shall be closed, but not sealed beyond intended infiltration control measures.
3. Interior doors, if installed at the time of the test, shall be open.
4. Exterior doors for continuous ventilation systems and heat recovery ventilators shall be closed and sealed.
5. Heating and cooling systems, if installed at the time of the test, shall be turned off.
6. Supply and return registers, if installed at the time of the test, shall be fully open.

Testing Company

Company Name: _____ Phone: _____

I hereby verify that the above Air Leakage results are in accordance with the 2020 7th Edition Florida Building Code Energy Conservation requirements according to the compliance method selected above.

Signature of Tester: _____ Date of Test: _____

Printed Name of Tester: _____

License/Certification #: _____ Issuing Authority: _____

Duct Leakage Test Report

Residential Prescriptive, Performance or ERI Method Compliance
2020 Florida Building Code, Energy Conservation, 7th Edition

Jurisdiction: 232700	Permit #:

Job Information

Builder:	Community:	Lot: NA
Address: 200 N. Esplanade Drive		
City: Miami Springs	State: FL	Zip: 33166

Duct Leakage Test Results

System 1	_____	cfm25
System 2	_____	cfm25
System 3	_____	cfm25
Sum of others	_____	cfm25
Total of all	_____	cfm25

_____ (Total of all systems) ÷ 1907 (Total Conditioned Square Footage) = _____ Qn

☐ **PASS** ☐ **FAIL**

○ **Prescriptive Method** cfm25 (Total)

To qualify as "substantially leak free" Qn Total must be less than or equal to 0.04 if air handler unit is installed. If air handler unit is not installed, Qn Total must be less than or equal to 0.03. This testing method meets the requirements in accordance with Section R403.3.3.

Is the air handler unit installed during testing? ☐ YES ($\frac{\leq .04}{Qn}$) ☐ NO ($\frac{\leq .03}{Qn}$)

○ **Performance/ERI Method** cfm25 (Out or Total)

To qualify using this method, Qn must not be greater than the proposed duct leakage Qn specified on Form R405-2020 or R406-2020.

Leakage Type selected on Form R405-2020 (EnergyCalc) or R406-2020	*Qn specified on Form R405-2020 (EnergyCalc) or R406-2020*
Proposed Leak Free	0.03

Duct tightness shall be verified by testing in accordance with ANSI/RESNET/ICC380 by either individuals as defined in Section 553.993(5) or (7), Florida Statutes, or individuals licensed as set forth in Section 489.105(3)(f), (g) or (i), Florida Statutes.

Testing Company

Company Name: _____ Phone: _____

I hereby verify that the above duct leakage testing results are in accordance with the Florida Building Code requirements with the selected compliance path as stated above, either the Prescriptive Method or Performance Method.

Signature of Tester: _____ Date of Test: _____

Printed Name of Tester: _____

License/Certification #: _____ Issuing Authority: _____

Florida Building Code, Energy Conservation, 7th Edition (2020)
Mandatory Requirements for Residential Performance, Prescriptive and ERI Methods

ADDRESS:	200 N. Esplanade Drive Miami Springs , FL , 33166	Permit Number:

MANDATORY REQUIREMENTS - See individual code sections for full details.

SECTION R401 GENERAL

☑ **R401.3 Energy Performance Level (EPL) display card (Mandatory).** The building official shall require that an energy performance level (EPL) display card be completed and certified by the builder to be accurate and correct before final approval of the building for occupancy. Florida law (Section 553.9085, Florida Statutes) requires the EPL display card to be included as an addendum to each sales contract for both presold and nonpresold residential buildings. The EPL display card contains information indicating the energy performance level and efficiencies of components installed in a dwelling unit. The building official shall verify that the EPL display card completed and signed by the builder accurately reflects the plans and specifications submitted to demonstrate code compliance for the building. A copy of the EPL display card can be found in Appendix RD.

SECTION R402 BUILDING THERMAL ENVELOPE

☑ **R402.4 Air leakage (Mandatory).** The building thermal envelope shall be constructed to limit air leakage in accordance with the requirements of Sections R402.4.1 through R402.4.5.

Exception: Dwelling units of R-2 Occupancies and multiple attached single family dwellings shall be permitted to comply with Section C402.5.

☐ **R402.4.1 Building thermal envelope.**The building thermal envelope shall comply with Sections R402.4.1.1 and R402.4.1.2. The sealing methods between dissimilar materials shall allow for differential expansion and contraction.

☐ **R402.4.1.1 Installation.** The components of the building thermal envelope as listed in Table R402.4.1.1 shall be installed in accordance with the manufacturer's instructions and the criteria listed in Table R402.4.1.1, as applicable to the method of construction. Where required by the code official, an approved third party shall inspect all components and verify compliance.

☐ **R402.4.1.2 Testing.** The building or dwelling unit shall be tested and verified as having an air leakage rate not exceeding seven air changes per hour in Climate Zones 1 and 2, and three air changes per hour in Climate Zones 3 through 8. Testing shall be conducted in accordance with ANSI/RESNET/ICC 380 and reported at a pressure of 0.2 inch w.g. (50 pascals). Testing shall be conducted by either individuals as defined in Section 553.993(5) or (7), Florida Statutes, or individuals licensed as set forth in Section 489.105(3)(f), (g) or (i) or an approved third party. A written report of the results of the test shall be signed by the party conducting the test and provided to the code official. Testing shall be performed at any time after creation of all penetrations of the building thermal envelope.

Exception: Testing is not required for additions, alterations, renovations, or repairs, of the building thermal envelope of existing buildings in which the new construction is less than 85 percent of the building thermal envelope.

During testing:
1. Exterior windows and doors, fireplace and stove doors shall be closed, but not sealed, beyond the intended weatherstripping or other infiltration control measures.
2. Dampers including exhaust, intake, makeup air, backdraft and flue dampers shall be closed, but not sealed beyond intended infiltration control measures.
3. Interior doors, if installed at the time of the test, shall be open.
4. Exterior doors for continuous ventilation systems and heat recovery ventilators shall be closed and sealed.
5. Heating and cooling systems, if installed at the time of the test, shall be turned off.
6. Supply and return registers, if installed at the time of the test, shall be fully open.

☐ **R402.4.2 Fireplaces.** New wood-burning fireplaces shall have tight-fitting flue dampers or doors, and outdoor combustion air. Where using tight-fitting doors on factory-built fireplaces listed and labeled in accordance with UL 127, the doors shall be tested and listed for the fireplace. Where using tight-fitting doors on masonry fireplaces, the doors shall be listed and labeled in accordance with UL 907.

☑ **R402.4.3 Fenestration air leakage.** Windows, skylights and sliding glass doors shall have an air infiltration rate of no more than 0.3 cfm per square foot (1.5 L/s/m2), and swinging doors no more than 0.5 cfm per square foot (2.6 L/s/m2), when tested according to NFRC 400 or AAMA/ WDMA/CSA 101/I.S.2/A440 by an accredited, independent laboratory and listed and labeled by the manufacturer.

Exception: Site-built windows, skylights and doors.

MANDATORY REQUIREMENTS - (Continued)

☐ **R402.4.4 Rooms containing fuel-burning appliances.** In Climate Zones 3 through 8, where open combustion air ducts provide combustion air to open combustion fuel burning appliances, the appliances and combustion air opening shall be located outside the building thermal envelope or enclosed in a room, isolated from inside the thermal envelope. Such rooms shall be sealed and insulated in accordance with the envelope requirements of Table R402.1.2, where the walls, floors and ceilings shall meet not less than the basement wall R-value requirement. The door into the room shall be fully gasketed and any water lines and ducts in the room insulated in accordance with Section R403. The combustion air duct shall be insulated where it passes through conditioned space to a minimum of R-8.

Exceptions:

1. Direct vent appliances with both intake and exhaust pipes installed continuous to the outside.
2. Fireplaces and stoves complying with Section R402.4.2 and Section R1006 of the Florida Building Code, Residential.

☑ **R402.4.5 Recessed lighting.** Recessed luminaires installed in the building thermal envelope shall be sealed to limit air leakage between conditioned and unconditioned spaces. All recessed luminaires shall be IC-rated and labeled as having an air leakage rate not more than 2.0 cfm (0.944 L/s) when tested in accordance with ASTM E283 at a 1.57 psf (75 Pa) pressure differential. All recessed luminaires shall be sealed with a gasket or caulk between the housing and the interior wall or ceiling covering.

SECTION R403 SYSTEMS

R403.1 Controls.

☑ **R403.1.1 Thermostat provision (Mandatory).** At least one thermostat shall be provided for each separate heating and cooling system.

☐ **R403.1.3 Heat pump supplementary heat (Mandatory).** Heat pumps having supplementary electric-resistance heat shall have controls that, except during defrost, prevent supplemental heat operation when the heat pump compressor can meet the heating load.

☑ **R403.3.2 Sealing (Mandatory)** All ducts, air handlers, filter boxes and building cavities that form the primary air containment passageways for air distribution systems shall be considered ducts or plenum chambers, shall be constructed and sealed in accordance with Section C403.2.9.2 of the Commercial Provisions of this code and shall be shown to meet duct tightness criteria below.

Duct tightness shall be verified by testing in accordance with ANSI/RESNET/ICC 380 by either individuals as defined in Section 553.993(5) or (7), Florida Statutes, or individuals licensed as set forth in Section 489.105(3)(f), (g) or (i), Florida Statutes, to be "substantially leak free" in accordance with Section R403.3.3.

☑ **R403.3.2.1 Sealed air handler.** Air handlers shall have a manufacturer's designation for an air leakage of no more than 2 percent of the design airflow rate when tested in accordance with ASHRAE 193.

☐ **R403.3.3 Duct testing (Mandatory).** Ducts shall be pressure tested to determine air leakage by one of the following methods:

1. Rough-in test: Total leakage shall be measured with a pressure differential of 0.1 inch w.g. (25 Pa) across the system, including the manufacturer's air handler enclosure if installed at the time of the test. All registers shall be taped or otherwise sealed during the test.
2. Postconstruction test: Total leakage shall be measured with a pressure differential of 0.1 inch w.g. (25 Pa) across the entire system, including the manufacturer's air handler enclosure. Registers shall be taped or otherwise sealed during the test.

Exceptions:

1. A duct air leakage test shall not be required where the ducts and air handlers are located entirely within the building thermal envelope.
2. *Duct testing is not mandatory for buildings complying by Section 405 of this code. Duct leakage testing is required for Section R405 compliance where credit is taken for leakage, and a duct air leakage Qn to the outside of less than 0.080 (where Qn = duct leakage to the outside in cfm per 100 square feet of conditioned floor area tested at 25 Pascals) is indicated in the compliance report for the proposed design.*

A written report of the results of the test shall be signed by the party conducting the test and provided to the code official.

☐ **R403.3.5 Building cavities (Mandatory).** Building framing cavities shall not be used as ducts or plenums.

☑ **R403.4 Mechanical system piping insulation (Mandatory).** Mechanical system piping capable of carrying fluids above 105°F (41°C) or below 55°F (13°C) shall be insulated to a minimum of R-3.

☑ **R403.4.1 Protection of piping insulation.** Piping insulation exposed to weather shall be protected from damage, including that caused by sunlight, moisture, equipment maintenance and wind, and shall provide shielding from solar radiation that can cause degradation of the material. Adhesive tape shall not be permitted.

☐ **R403.5.1 Heated water circulation and temperature maintenance systems (Mandatory).** If heated water circulation systems are installed, they shall be in accordance with Section R403.5.1.1. Heat trace temperature maintenance systems shall be in accordance with Section R403.5.1.2. Automatic controls, temperature sensors and pumps shall be accessible. Manual controls shall be readily accessible.

☐ **R403.5.1.1 Circulation systems.** Heated water circulation systems shall be provided with a circulation pump. The system return pipe shall be a dedicated return pipe or a cold water supply pipe. Gravity and thermosiphon circulation systems shall be prohibited. Controls for circulating hot water system pumps shall start the pump based on the identification of a demand for hot water within the occupancy. The controls shall automatically turn off the pump when the water in the circulation loop is at the desired temperature and when there is no demand for hot water.

☐ **R403.5.1.2 Heat trace systems.** Electric heat trace systems shall comply with IEEE 515.1 or UL 515. Controls for such systems shall automatically adjust the energy input to the heat tracing to maintain the desired water temperature in the piping in accordance with the times when heated water is used in the occupancy.

MANDATORY REQUIREMENTS - (Continued)

☐ **R403.5.5 Heat traps (Mandatory).** Storage water heaters not equipped with integral heat traps and having vertical pipe risers shall have heat traps installed on both the inlets and outlets. External heat traps shall consist of either a commercially available heat trap or a downward and upward bend of at least 3 ½ inches (89 mm) in the hot water distribution line and cold water line located as close as possible to the storage tank.

R403.5.6 Water heater efficiencies (Mandatory).

☑ **R403.5.6.1.1 Automatic controls.** Service water-heating systems shall be equipped with automatic temperature controls capable of adjustment from the lowest to the highest acceptable temperature settings for the intended use. The minimum temperature setting range shall be from 100°F to 140°F (38°C to 60°C).

☑ **R403.5.6.1.2 Shut down.** A separate switch or a clearly marked circuit breaker shall be provided to permit the power supplied to electric service systems to be turned off. A separate valve shall be provided to permit the energy supplied to the main burner(s) of combustion types of service water-heating systems to be turned off.

☑ **R403.5.6.2 Water-heating equipment.** Water-heating equipment installed in residential units shall meet the minimum efficiencies of Table C404.2 in Chapter 4 of the Florida Building Code, Energy Conservation, Commercial Provisions, for the type of equipment installed. Equipment used to provide heating functions as part of a combination system shall satisfy all stated requirements for the appropriate water-heating category. Solar water heaters shall meet the criteria of Section R403.5.6.2.1.

☐ **R403.5.6.2.1 Solar water-heating systems.** Solar systems for domestic hot water production are rated by the annual solar energy factor of the system. The solar energy factor of a system shall be determined from the Florida Solar Energy Center Directory of Certified Solar Systems. Solar collectors shall be tested in accordance with ISO Standard 9806, Test Methods for Solar Collectors, and SRCC Standard TM-1, Solar Domestic Hot Water System and Component Test Protocol. Collectors in installed solar water-heating systems should meet the following criteria:

1. Be installed with a tilt angle between 10 degrees and 40 degrees of the horizontal; and
2. Be installed at an orientation within 45 degrees of true south.

☑ **R403.6 Mechanical ventilation (Mandatory).** The building shall be provided with ventilation that meets the requirements of the Florida Building Code, Residential, or Florida Building Code, Mechanical, as applicable, or with other approved means of ventilation including: Natural, Infiltration or Mechanical means. Outdoor air intakes and exhausts shall have automatic or gravity dampers that close when the ventilation system is not operating.

☐ **R403.6.1 Whole-house mechanical ventilation system fan efficacy.** When installed to function as a whole-house mechanical ventilation system, fans shall meet the efficacy requirements of Table R403.6.1.

Exception: Where an air handler that is integral to tested and listed HVAC equipment is used to provide whole-house mechanical ventilation, the air handler shall be powered by an electronically commutated motor.

☑ **R403.6.2 Ventilation air.** Residential buildings designed to be operated at a positive indoor pressure or for mechanical ventilation shall meet the following criteria:

1. The design air change per hour minimums for residential buildings in ASHRAE 62.2, Ventilation for Acceptable Indoor Air Quality, shall be the maximum rates allowed for residential applications.
2. No ventilation or air-conditioning system make-up air shall be provided to conditioned space from attics, crawlspaces, attached enclosed garages or outdoor spaces adjacent to swimming pools or spas.
3. If ventilation air is drawn from enclosed space(s), then the walls of the space(s) from which air is drawn shall be insulated to a minimum of R-11 and the ceiling shall be insulated to a minimum of R-19, space permitting, or R-10 otherwise.

R403.7 Heating and cooling equipment.

☑ **R403.7.1 Equipment sizing (Mandatory).** Heating and cooling equipment shall be sized in accordance with ACCA Manual S based on the equipment loads calculated in accordance with ACCA Manual J or other approved heating and cooling calculation methodologies, based on building loads for the directional orientation of the building. The manufacturer and model number of the outdoor and indoor units (if split system) shall be submitted along with the sensible and total cooling capacities at the design conditions described in Section R302.1. This Code does not allow designer safety factors, provisions for future expansion or other factors that affect equipment sizing. System sizing calculations shall not include loads created by local intermittent mechanical ventilation such as standard kitchen and bathroom exhaust systems. New or replacement heating and cooling equipment shall have an efficiency rating equal to or greater than the minimum required by federal law for the geographic location where the equipment is installed.

TABLE R403.6.1
WHOLE-HOUSE MECHANICAL VENTILATION SYSTEM FAN EFFICACY

FAN LOCATION	AIRFLOW RATE MINIMUM (CFM)	MINIMUM EFFICACY [a] (CFM/WATT)	AIRFLOW RATE MAXIMUM (CFM)
HRV or ERV	Any	1.2 cfm/watt	Any
Range hoods	Any	2.8 cfm/watt	Any
In-line fan	Any	2.8 cfm/watt	Any
Bathroom, utility room	10	1.4 cfm/watt	<90
Bathroom, utility room	90	2.8 cfm/watt	Any

For SI: 1 cfm = 28.3 L/min. a. When tested in accordance with HVI Standard 916

MANDATORY REQUIREMENTS - (Continued)

☑ **R403.7.1.1 Cooling equipment capacity.** Cooling only equipment shall be selected so that its total capacity is not less than the calculated total load but not more than 1.15 times greater than the total load calculated according to the procedure selected in Section R403.7, or the closest available size provided by the manufacturer's product lines. The corresponding latent capacity of the equipment shall not be less than the calculated latent load.
The published value for AHRI total capacity is a nominal, rating-test value and shall not be used for equipment sizing. Manufacturer's expanded performance data shall be used to select cooling-only equipment. This selection shall be based on the outdoor design dry-bulb temperature for the load calculation (or entering water temperature for water-source equipment), the blower CFM provided by the expanded performance data, the design value for entering wet-bulb temperature and the design value for entering dry-bulb temperature.

Design values for entering wet-bulb and dry-bulb temperatures shall be for the indoor dry bulb and relative humidity used for the load calculation and shall be adjusted for return side gains if the return duct(s) is installed in an unconditioned space.

Exceptions:

1. Attached single- and multiple-family residential equipment sizing may be selected so that its cooling capacity is less than the calculated total sensible load but not less than 80 percent of that load.
2. When signed and sealed by a Florida-registered engineer, in attached single- and multiple-family units, the capacity of equipment may be sized in accordance with good design practice.

R403.7.1.2 Heating equipment capacity.

☐ **R403.7.1.2.1 Heat pumps.** Heat pump sizing shall be based on the cooling requirements as calculated according to Section R403.7.1.1, and the heat pump total cooling capacity shall not be more than 1.15 times greater than the design cooling load even if the design heating load is 1.15 times greater than the design cooling load.

☑ **R403.7.1.2.2 Electric resistance furnaces.** Electric resistance furnaces shall be sized within 4 kW of the design requirements calculated according to the procedure selected in Section R403.7.1.

☐ **R403.7.1.2.3 Fossil fuel heating equipment.** The capacity of fossil fuel heating equipment with natural draft atmospheric burners shall not be less than the design load calculated in accordance with Section R403.7.1.

☑ **R403.7.1.3 Extra capacity required for special occasions.** Residences requiring excess cooling or heating equipment capacity on an intermittent basis, such as anticipated additional loads caused by major entertainment events, shall have equipment sized or controlled to prevent continuous space cooling or heating within that space by one or more of the following options:

1. A separate cooling or heating system is utilized to provide cooling or heating to the major entertainment areas.
2. A variable capacity system sized for optimum performance during base load periods is utilized.

☐ **R403.8 Systems serving multiple dwelling units (Mandatory).** Systems serving multiple dwelling units shall comply with Sections C403 and C404 of the Florida Building Code, Energy Conservation—Commercial Provisions in lieu of Section R403.

☐ **R403.9 Snow melt and ice system controls (Mandatory)** Snow- and ice-melting systems, supplied through energy service to the building, shall include automatic controls capable of shutting off the system when the pavement temperature is above 50°F (10°C), and no precipitation is falling and an automatic or manual control that will allow shutoff when the outdoor temperature is above 40°F (4.8°C).

☐ **R403.10 Pools and permanent spa energy consumption (Mandatory).** The energy consumption of pools and permanent spas shall be in accordance with Sections R403.10.1 through R403.10.5.

☑ **R403.10.1 Heaters.** The electric power to heaters shall be controlled by a readily accessible on-off switch that is an integral part of the heater mounted on the exterior of the heater, or external to and within 3 feet (914 mm) of the heater. Operation of such switch shall not change the setting of the heater thermostat. Such switches shall be in addition to a circuit breaker for the power to the heater. Gas-fired heaters shall not be equipped with continuously burning ignition pilots.

☐ **R403.10.2 Time switches.** Time switches or other control methods that can automatically turn off and on according to a preset schedule shall be installed for heaters and pump motors. Heaters and pump motors that have built-in time switches shall be in compliance with this section.

Exceptions:

1. Where public health standards require 24-hour pump operation.
2. Pumps that operate solar- and waste-heat-recovery pool heating systems.
3. Where pumps are powered exclusively from on-site renewable generation.

☐ **R403.10.3 Covers.** Outdoor heated swimming pools and outdoor permanent spas shall be equipped with a vapor-retardant cover on or at the water surface or a liquid cover or other means proven to reduce heat loss.

Exception: Where more than 70 percent of the energy for heating, computed over an operation season, is from site-recovered energy, such as from a heat pump or solar energy source, covers or other vapor-retardant means shall not be required.

☐ **R403.10.4 Gas- and oil-fired pool and spa heaters.** All gas- and oil-fired pool and spa heaters shall have a minimum thermal efficiency of 82 percent for heaters manufactured on or after April 16, 2013, when tested in accordance with ANSI Z 21.56. Pool heaters fired by natural or LP gas shall not have continuously burning pilot lights.

☐ **R403.10.5 Heat pump pool heaters.** Heat pump pool heaters shall have a minimum COP of 4.0 when tested in accordance with AHRI 1160, Table 2, Standard Rating Conditions-Low Air Temperature. A test report from an independent laboratory is required to verify procedure compliance. Geothermal swimming pool heat pumps are not required to meet this standard.

☐ **R403.11 Portable spas (Mandatory).** The energy consumption of electric-powered portable spas shall be controlled by the requirements of APSP-14.

☐ **R403.13 Dehumidifiers (Mandatory** If installed, a dehumidifier shall conform to the following requirements:

1. The minimum rated efficiency of the dehumidifier shall be greater than 1.7 liters/ kWh if the total dehumidifier capacity for the house is less than 75 pints/day and greater than 2.38 liters/kWh if the total dehumidifier capacity for the house is greater than or equal to 75 pints/day.
2. The dehumidifier shall be controlled by a sensor that is installed in a location where it is exposed to mixed house air.
3. Any dehumidifier unit located in unconditioned space that treats air from conditioned space shall be insulated to a minimum of R-2.
4. Condensate disposal shall be in accordance with Section M1411.3.1 of the Florida Building Code, Residential.

☐ **R403.13.1 Ducted dehumidifiers.** Ducted dehumidifiers shall, in addition to conforming to the requirements of Section R403.13, conform to the following requirements:

1. If a ducted dehumidifier is configured with return and supply ducts both connected into the supply side of the cooling system, a backdraft damper shall be installed in the supply air duct between the dehumidifier inlet and outlet duct.
2. If a ducted dehumidifier is configured with only its supply duct connected into the supply side of the central heating and cooling system, a backdraft damper shall be installed in the dehumidifier supply duct between the dehumidifier and central supply duct.
3. A ducted dehumidifier shall not be ducted to or from a central ducted cooling system on the return duct side upstream from the central cooling evaporator coil.
4. Ductwork associated with a dehumidifier located in unconditioned space shall be insulated to a minimum of R-6.

SECTION R404

ELECTRICAL POWER AND LIGHTING SYSTEMS

☑ **R404.1 Lighting equipment (Mandatory).** Not less than 90 percent of the lamps in permanently installed luminaires shall have an efficacy of at least 45 lumens-per-watt or shall utilize lamps with an efficacy of not less than 65 lumens-per-watt.

R404.1.1 Lighting equipment (Mandatory). Fuel gas lighting systems shall not have continuously burning pilot lights.

AHRI CERTIFIED®
www.ahridirectory.org

Eligible for Federal Tax Credit

Certificate of Product Ratings

AHRI Certified Reference Number : 201295251 Date : 11-26-2021 Model Status : Active

Old AHRI Reference Number : 7943715

AHRI Type : RCU-A-CB (Split System: Air-Cooled Condensing Unit, Coil with Blower)

Outdoor Unit Brand Name : RHEEM

Outdoor Unit Model Number (Condenser or Single Package) : RA1660AJ1

Indoor Unit Model Number (Evaporator and/or Air Handler) : RH1V6024STAN

Region : All (AK, AL, AR, AZ, CA, CO, CT, DC, DE, FL, GA, HI, ID, IL, IA, IN, KS, KY, LA, MA, MD, ME, MI, MN, MO, MS, MT, NC, ND, NE, NH, NJ, NM, NV, NY, OH, OK, OR, PA, RI, SC, SD, TN, TX, UT, VA, VT, WA, WV, WI, WY, U.S. Territories)

Region Note : Central air conditioners manufactured prior to January 1, 2015 are eligible to be installed in all regions until June 30, 2016. Beginning July 1, 2016 central air conditioners can only be installed in region(s) for which they meet the regional efficiency requirement.

The manufacturer of this RHEEM product is responsible for the rating of this system combination.

Rated as follows in accordance with the latest edition of AHRI 210/240 with Addendum 1, Performance Rating of Unitary Air-Conditioning & Air-Source Heat Pump Equipment and subject to rating accuracy by AHRI-sponsored, independent, third party testing:

Cooling Capacity (A2) - Single or High Stage (95F), btuh : 57000

SEER : 16.00

EER (A2) - Single or High Stage (95F) : 13.00

†"Active" Model Status are those that an AHRI Certification Program Participant is currently producing AND selling or offering for sale; OR new models that are being marketed but are not yet being produced."Production Stopped" Model Status are those that an AHRI Certification Program Participant is no longer producing BUT is still selling or offering for sale.
Ratings that are accompanied by WAS indicate an involuntary re-rate. The new published rating is shown along with the previous (i.e. WAS) rating.

DISCLAIMER
AHRI does not endorse the product(s) listed on this Certificate and makes no representations, warranties or guarantees as to, and assumes no responsibility for, the product(s) listed on this Certificate. AHRI expressly disclaims all liability for damages of any kind arising out of the use or performance of the product(s), or the unauthorized alteration of data listed on this Certificate. Certified ratings are valid only for models and configurations listed in the directory at www.ahridirectory.org.

TERMS AND CONDITIONS
This Certificate and its contents are proprietary products of AHRI. This Certificate shall only be used for individual, personal and confidential reference purposes. The contents of this Certificate may not, in whole or in part, be reproduced; copied; disseminated; entered into a computer database; or otherwise utilized, in any form or manner or by any means, except for the user's individual, personal and confidential reference.

CERTIFICATE VERIFICATION
The information for the model cited on this certificate can be verified at www.ahridirectory.org, click on "Verify Certificate" link and enter the AHRI Certified Reference Number and the date on which the certificate was issued, which is listed above, and the Certificate No., which is listed at bottom right.

©2021 Air-Conditioning, Heating, and Refrigeration Institute

AHRI
AIR-CONDITIONING, HEATING, & REFRIGERATION INSTITUTE
we make life better™

CERTIFICATE NO.: 132824067030211758

Ordered By:



Zendegui Law Group
3111 Kane Concourse, Suite 310, Bay Harbor Islands, FL 33154
(305) 579-3333 | Fax (305) 579-3330 | www.gdzlaw.com

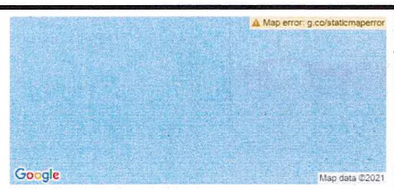



This survey shall not be used for construction/permitting purposes without written consent from the land surveyor who has signed and sealed this survey.

CITY OF MIAMI SPRINGS
BUILDING DEPARTMENT

DEC 14 2021

RECEIVED

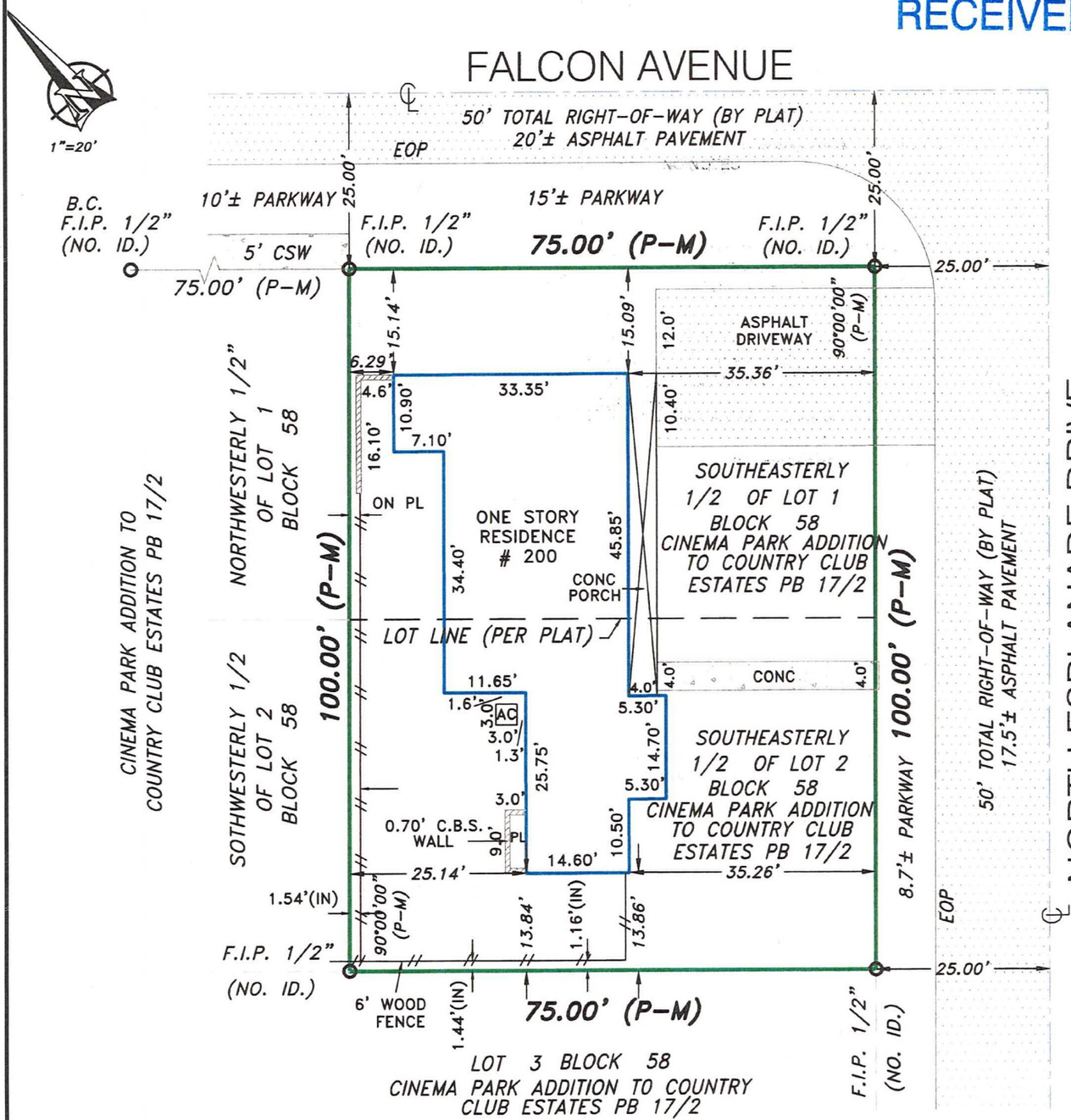

Accepted By: _____

Property Address:
200 N. Esplanade Drive
Miami Springs, FLORIDA 33166

Notes: NO NOTES

SURVEYOR'S CERTIFICATION: I HEREBY CERTIFY THAT THIS BOUNDARDY SURVEY IS A TRUE AND CORRECT REPRESENTATION OF A SURVEY PREPARED UNDER MY DIRECTION. THIS COMPLIES WITH THE MINIMUM TECHNICAL STANDARDS AS SET FORTH BY THE STATE OF FLORIDA BOARD OF PROFESSIONAL LAND SURVEYOR'S IN CHAPTER 5J-17.051 THROUGH 5J-17.052, FLORIDA ADMNISTRATIVE CODE PURSUANT TO 427 027 FLORIDA STATUTES.

SIGNED _____ FOR THE FIRM
FERNANDO FERNANDEZ
STATE OF FLORIDA

LICENSED SURVEYOR AND MAPPER
NO. 6765
07/29/2021
STATE OF FLORIDA
PROFESSIONAL SURVEYOR AND MAPPER

P.S.M. NO. 6765

NOT VALID WHITOUT AN AUTHENTIC ELECTRONIC SIGNATURE AND AUTHENTICATED ELECTRONIC SEAL AND OR THIS MAP IS NOT VALID WITHOUT THE SIGNATURE AND THE ORIGINAL RAISED SEAL OF A LICENSED SURVEYOR AND MAPPER.

M.E. Land Surveying, Inc.
10665 SW 190th Street
Suite 3110
Miami, FL 33157
Phone: (305) 740-3319
Fax: (305) 669-3190
LB#: 7989

ME LAND

Surveyor's Legend

CITY OF MIAMI SPRINGS
BUILDING DEPARTMENT
DEC 14 2021
RECEIVED

	PROPERTY LINE						
	STRUCTURE	FND	FOUND IRON PIPE / PIN AS NOTED ON PLAT	B.R.	BEARING REFERENCE	TEL.	TELEPHONE FACILITIES
	CONC. BLOCK WALL	△	CENTRAL ANGLE OR DELTA			U.P.	UTILITY POLE
X X	CHAIN-LINK FENCE OR WIRE FENCE	LB#	LICENSE # - BUSINESS	R	RADIUS OR RADIAL	E.U.B.	ELECTRIC UTILITY BOX
	WOOD FENCE	LS#	LICENSE # - SURVEYOR	RAD.	RADIAL TIE	SEP.	SEPTIC TANK
	IRON FENCE	CALC	CALCULATED POINT	N.R.	NON RADIAL	D.F.	DRAINFIELD
	EASEMENT	SET	SET PIN	TYP.	TYPICAL	A/C	AIR CONDITIONER
	CENTER LINE	▲	CONTROL POINT	I.R.	IRON ROD	S/W	SIDEWALK
	WOOD DECK	■	CONCRETE MONUMENT	I.P.	IRON PIPE	DWY	DRIVEWAY
	CONCRETE		BENCHMARK	N&D	NAIL & DISK	SCR.	SCREEN
	ASPHALT	ELEV	ELEVATION	PK NAIL	PARKER-KALON NAIL	GAR	GARAGE
	BRICK / TILE	P.T.	POINT OF TANGENCY	D.H.	DRILL HOLE	ENCL.	ENCLOSURE
	WATER	P.C.	POINT OF CURVATURE	W	WELL	N.T.S.	NOT TO SCALE
	APPROXIMATE EDGE OF WATER	P.R.M.	PERMANENT REFERENCE MONUMENT		FIRE HYDRANT	F.F.	FINNISHED FLOOR
	COVERED AREA	P.C.C.	POINT OF COMPOUND CURVATURE	M.H.	MANHOLE	T.O.B.	TOP OF BANK
	TREE	P.R.C.	POINT OF REVERSE CURVATURE	O.H.L.	OVERHEAD LINES	E.O.W.	EDGE OF WATER
	POWER POLE	P.O.B.	POINT OF BEGINNING	TX	TRANSFORMER	E.O.P	EDGE OF PAVEMENT
	CATCH BASIN	P.O.C.	POINT OF COMMENCEMENT	CATV	CABLE TV RISER	C.V.G.	CONCRETE VALLEY GUTTER
C.U.E.	COUNTY UTILITY EASEMENT	P.C.P.	PERMANENT CONTROL POINT	W.M.	WATER METER	B.S.L.	BUILDING SETBACK LINE
I.E./E.E.	INGRESS / EGRESS EASEMENT	M	FIELD MEASURED	P/E	POOL EQUIPMENT	S.T.L.	SURVEY TIE LINE
U.E.	UTILITY EASEMENT	P	PLATTED MEASUREMENT	CONC.	CONCRETE SLAB	℄	CENTER LINE
		D	DEED	ESMT	EASEMENT	R/W	RIGHT-OF-WAY
		C	CALCULATED	D.E.	DRAINAGE EASEMENT	P.U.E.	PUBLIC UTILITY EASEMENT
		L.M.E.	LAKE OR LANDSCAPE MAINT. ESMT.	L.B.E.	LANDSCAPE BUFFER EASEMENT	C.M.E.	CANAL MAINTENANCE EASEMENT
		R.O.E.	ROOF OVERHANG EASEMENT	L.A.E.	LIMITED ACCESS EASEMENT	A.E.	ANCHOR EASEMENT

Property Address:

200 N. Esplanade Drive
Miami Springs, FLORIDA 33166

Flood Information:

Community Number: MIAMI SPRINGS/ 120653
Panel Number: 12086C0283
Suffix: L
Date of Firm Index: 09/11/2009
Flood Zone: AH
Base Flood Elevation: 7.0'
Date of Field Work: 07/27/2021
Date of Completion: 07/29/2021

General Notes:

1.) The Legal Description used to perform this survey was supplied by others. This survey does not determine or is not to imply ownership
2.) This survey only shows above ground improvements. Underground utilities, footings, or encroachments are not located on this survey map
3.) The minimum relative distance accuracy for this type of Survey is 1 foot in 10,000 feet. The accuracy obtained by measurement and calculation of closed geometric figures was found to exceed this requirement. Well-identified features as depicted on the Survey Map were measure to an estimated horizontal positional accuracy of 1/10 foot.
4.) If there is a septic tank, well, or drain field on this survey, the location of such items was shown to us by others and the information was not verified.
5.) Examination of the abstract of title will have to be made to determine recorded instruments, if any, affect this property. The lands shown herein were not abstracted for easement or other recorded encumbrances not shown on the plat.
6.) Wall ties are done to the face of the wall.
7.) Fence ownership is not determined.
8.) Bearings referenced to line noted B.R also are assumed.
9.) Dimensions shown are platted and measured unless otherwise shown.
10.) No identification found on property corners unless noted.
11.) Not valid unless sealed with the signing surveyors embossed seal.
12.) Boundary survey means a drawing and/or graphic representation of the survey work performed in the field, could be drawn at a shown scale and/or not to scale.
13.) Elevations if shown are based upon NGVD 1929 unless otherwise noted.
14.) This is a BOUNDARY SURVEY unless otherwise noted.
15.) This survey is exclusive for the use of the parties to whom it is certified. The certifications do not extend to any unnamed parties.
16.) This survey shall not be used for construction/permitting purposes without written consent from the land surveyor who has signed and sealed this survey.

Legal Description:

Southeasterly 1/2 of Lots 1 and 2, Block 58, CINEMA PARK ADDITION TO COUNTRY CLUB ESTATES, according to the plat thereof, as recorded in Plat Book 17, Page 2, of the Public Records of Miami-Dade County, Florida.

Printing Instructions:

While viewing the survey in any PDF Reader, select the File Drop-down and select "Print". Select a color printer, if available; or at least one with 8.5" x 14" (legal) paper.
Select ALL for Print Range, and the # of copies you would like to print out.
Under the "Page Scaling" please make sure you have selected "None".
Do not check the "Auto-rotate and Center" box.
Check the "Choose Paper size by PDF" checkbox, then click OK to print.

Certified To:
Jovany Jimenez and Ambar Sara Preval
Zendegui Law Group, P.A.
Banking Mortgage Services; BMS Corp.and/or Secretary of Housing and Urban Development of Washington
its successors and/or assigns as their interest may appear.

Please copy below for policy preparation purposes only:

This policy does not insure against loss or damage by reason of the following exceptions: Any rights, easements, interests, or claims which may exist by reason of, or reflected by, the following facts shown on the survey prepared by *Fernando Fernandez* *, for M.E. Land Surveying Inc., dated* *07/29/2021* *bearing Job #* *B-99236* :

a. *NO NOTES*

M.E. Land Surveying, Inc.

10665 SW 190th Street, Suite 3110 Miami, FL 33157
Phone: (305) 740-3319
Fax: (305) 669-3190
LB#: 7989

TABLE 3

NVBH 24 BUTTERFLY HANGER

SIZE	PRODUCT CODE	GAUGE	FASTENER SCHEDULE		ALLOWABLE LOADS (lbs.)
			HEADER 8d	JOIST 8d	DOWNWARD GRAVITY LOADS
2x4	NVBH24	18	12	6	1113

Notes:

1. Use all specified fasteners in schedule to achieve values indicated.
2. Values are based on $1\frac{1}{2}$" header and Joist thickness.
3. See General Notes, Sheet 1.

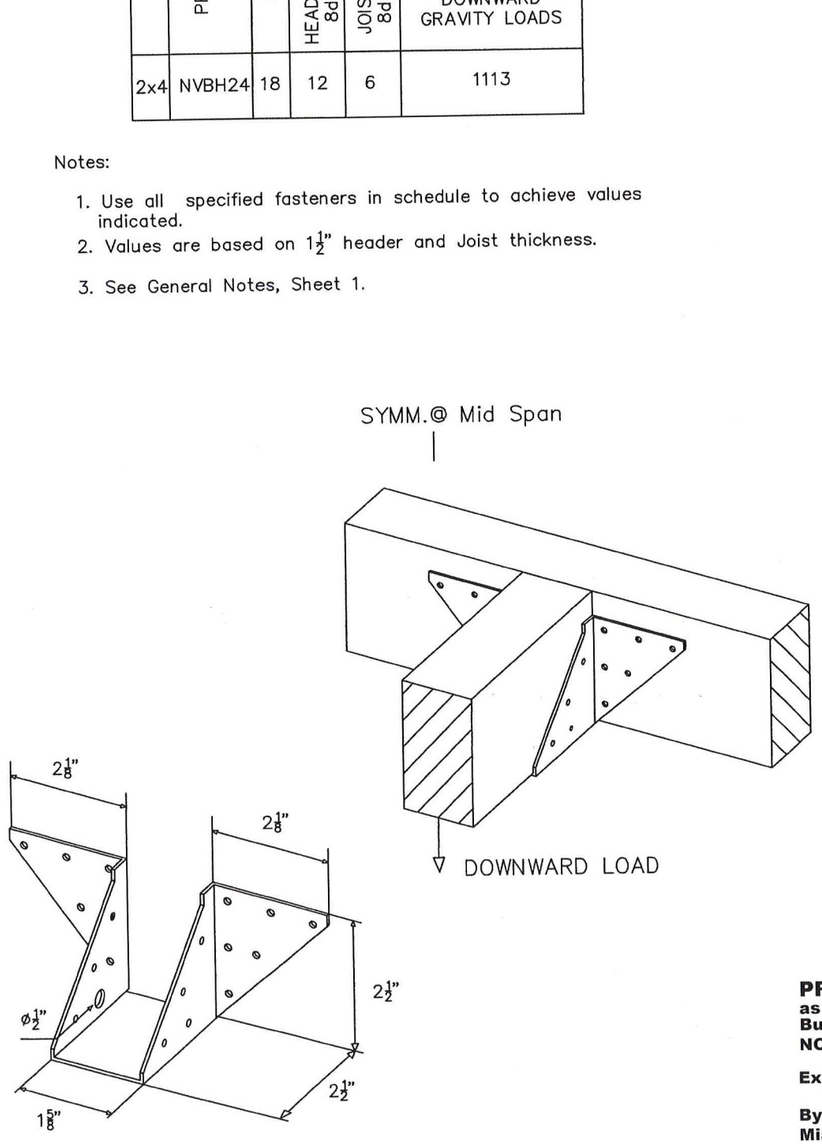

TABLE 4

NVUH 26 JOIST HANGER

SIZE	PRODUCT CODE	GAUGE	FASTENER SCHEDULE		ALLOWABLE LOADS (lbs.)	
			HEADER 16d	JOIST 10d x 1½"	DOWNWARD GRAVITY LOADS	WIND UPLIFT LOAD
2x6	NVUH26	14	20	10	2233	1213

Notes:

1. Use all specified fasteners in schedule to achieve values indicated.
2. Values are based on 3" header thickness and $1\frac{1}{2}$" Joist thickness.
3. See General Notes, Sheet 1.

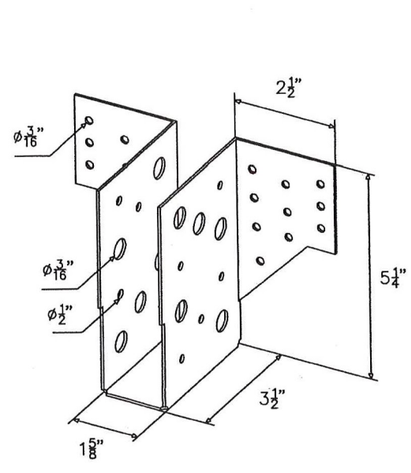

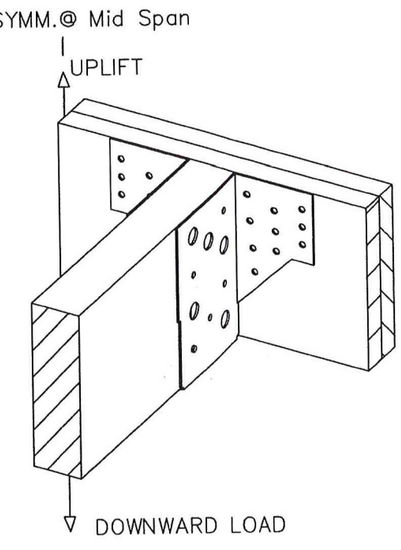

PRODUCT REVISED
as complying with the Florida Building Code
NOA-No. 20-0519.03
Expiration Date 07/30/2025
By
Miami-Dade Product Control

VIPIN N. TOLAT, PE (CIVIL)
FL. REG. # 12847
15123 LANTERN CREEK LANE
HOUSTON, TX 77068

5/7/2020

Nu-Vue Industries, Inc.
1053-1059 East 29 Street
Hialeah, Florida 33013
PHONE: (305) 694-0397
FAX: (305) 694-0398

NVBH 24 AND NVUH 26 HANGERS

DWG #:	Sheet:	Date:	
NU-2	2 of 4	May 5, 2020	

TABLE 5

NVRT Flat and Twisted Rafter Ties

Length (in)	Product Code	Gauge
12	NVRT–12	14
16	NVRT–16	14
18	NVRT–18	14
20	NVRT–20	14
22	NVRT–22	14
24	NVRT–24	14
30	NVRT–30	14
36	NVRT–36	14
48	NVRT–48	14

16d Fasteners		Maximum Uplift Load (lbs)	
TOTAL	In each member*	Flat Ties	Twisted Ties
8	4	725	724
10	5	861	860
12	6	998	996
14	7	1135	1132

Notes:

1. Specify "F" for Flat and "T" for Twisted when ordering.
2. Fastener values are based on a minimum $1\frac{1}{2}$" thick wood members.
3. * Indicates no. of nails in each connected wood member.
4. See General Notes, sheet 1.

PRODUCT REVISED
as complying with the Florida Building Code
NOA–No. 20-0519.03
Expiration Date 07/30/2025
By
Miami–Dade Product Control

TABLE 6

NVRT Twisted Rafter Ties to Concrete Tie Beams or Concrete Filled Masonry

Length (in)	Product Code	Gauge
12	NVRT–12	14
16	NVRT–16	14
18	NVRT–18	14
20	NVRT–20	14
22	NVRT–22	14
24	NVRT–24	14
30	NVRT–30	14
36	NVRT–36	14
48	NVRT–48	14

No. of 16d nails to Wood Framing	No. of $\frac{1}{4}$" diameter Tapcons to Concrete	Maximum Uplift Load (lbs)
4	6	722
5	7	856
6	8	991
7	9	1125

Notes:

1. ITW tapcons shall be embedded a minimum of $1\frac{1}{4}$" into concrete tiebeam or tiebeam formed with concrete filled masonry. ITW tapcons shall have a min. edge distance of $2\frac{1}{2}$" and minimum spacing of $1\frac{1}{2}$" as shown.
2. See General Notes, sheet 1.
3. All tapcons must be in the same row spaced at $1\frac{1}{2}$" on centers. Do not use holes in the opposite row. Strap must be long enough to accommodate required tapcons.

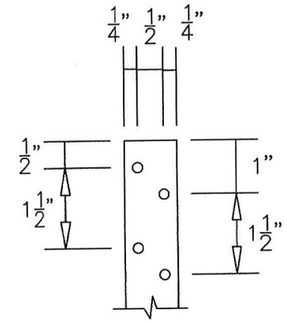

NVRT Anchor
Holes dia. $\frac{3}{16}$"

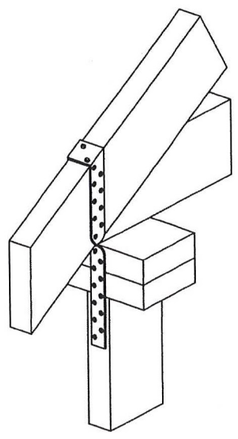

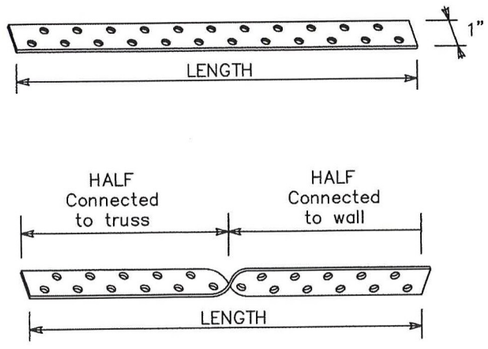

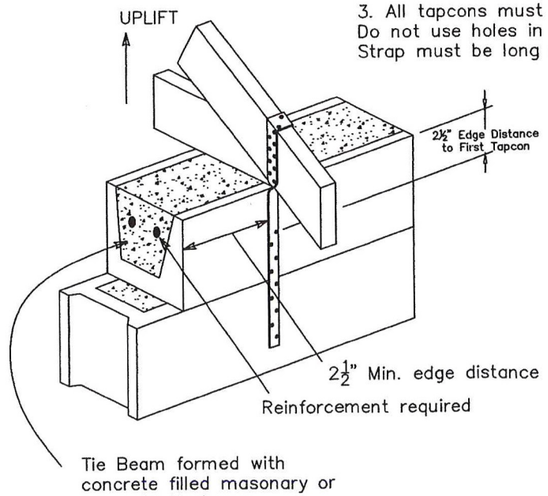

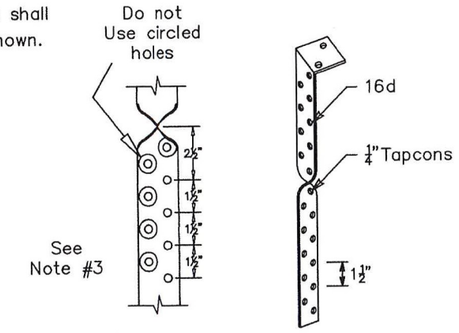

VIPIN N. TOLAT, PE (CIVIL)
FL. REG. # 12847
15123 LANTERN CREEK LANE
HOUSTON, TX 77068

5/7/2020

Nu-Vue Industries, Inc.
1053–1059 East 29 Street
Hialeah, Florida 33013
PHONE: (305) 694–0397
FAX: (305) 694–0398

NVRT FLAT AND TWISTED RAFTER TIES

DWG #:	Sheet:	Date:	
NU-2	3 of 4	May 5, 2020	

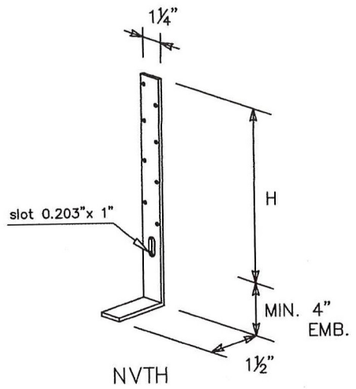

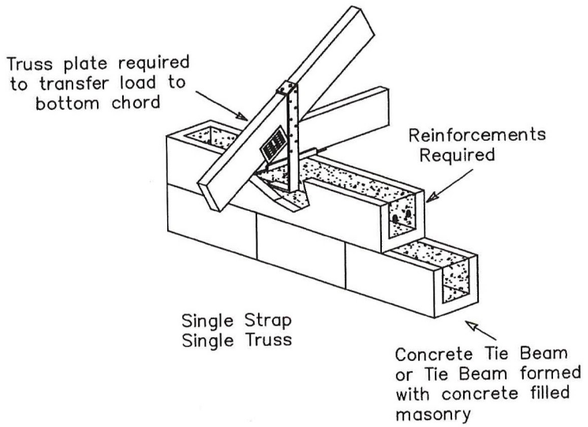

TABLE 7

Truss Anchors NVTH

H Length (in)	Product Code	Gauge seat	Gauge strap
12	NVTH–16	18	14
14	NVTH–18	18	14
16	NVTH–20	18	14
18	NVTH–22	18	14
20	NVTH–24	18	14
22	NVTH–26	18	14
24	NVTH–28	18	14
26	NVTH–30	18	14
32	NVTH–36	18	14
44	NVTH–48	18	14

No. of Fasteners in each Strap 10d x 1.5"	Maximum Uplift Loads (lbs)	
	Single Strap on Single Truss	Double Straps on Double Truss
5	1032	2064
6	1222	2444
7	1275	2550
8	1329	2658
9	1383	2766
10	1437	2874
11	1490	2980
12	1544	3088
13	1598	3196

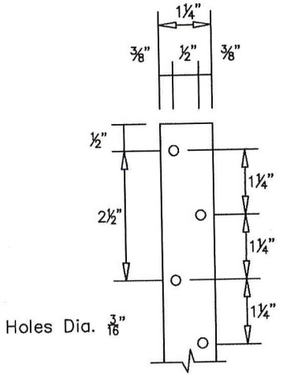

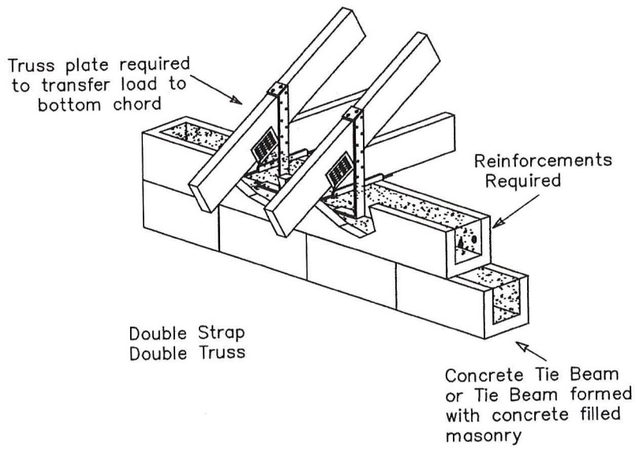

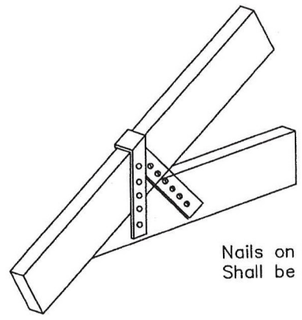

For General Notes, see sheet 1

PRODUCT REVISED
as complying with the Florida Building Code
NOA-No. 20-0519.03
Expiration Date 07/30/2025
By
Miami-Dade Product Control

VIPIN N. TOLAT, PE (CIVIL)
FL. REG. # 12847
15123 LANTERN CREEK LANE
HOUSTON, TX 77068

5/7/2020

Nu–Vue Industries, Inc.
1053–1059 East 29 Street
Hialeah, Florida 33013
Phone: (305) 694–0397
Fax: (305) 694–0398

NVTH ANCHORS

DWG #:	Sheet:	Date:	Revisions:
NU–2	4 of 4	May 5, 2020	

RHEEM SALES COMPANY, INC.

WIND LOAD CERTIFICATION OF MECHANICAL UNIT CABINETRY AND STEEL/ALUMINUM TIE-DOWN CLIPS: AT GRADE MOUNTED APPLICATIONS

OFFICE COPY
CITY OF MIAMI SPRINGS
BUILDING DEPARTMENT
DEC 10 2021
RECEIVED
OCT 22 2020

FRANK BENNARDO, PE
PE# 0046549 CA# 9885
LICENSE
No 46549
STATE OF

DIGITAL SEAL NOTICE: IF THIS DOCUMENT IS DIGITALLY SIGNED, THIS SHEET IS PART OF A DIGITALLY SIGNED SET. IT SHALL REMAIN IN DIGITAL FORMAT, SHALL BE VERIFIED BY ELECTRONIC MEANS, & PRINTED COPIES OF THIS DOCUMENT ARE NOT CONSIDERED SIGNED AND SEALED.
PRINTED DOCUMENT NOTICE: IF THIS DOCUMENT IS PRINTED & DOESN'T CONTAIN AN ENGINEER'S ORIGINAL SIGNATURE & SEAL, THIS DOCUMENT IS VOID & NOT VALID FOR USE. PHOTOCOPIES ARE NOT PERMITTED FOR USE.

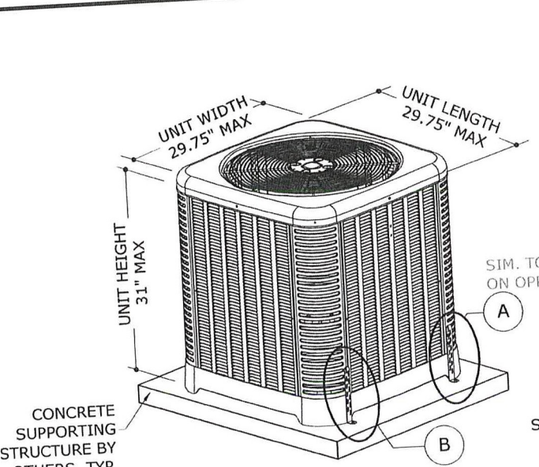

1/1 MECHANICAL UNIT
N.T.S. FRONT ISOMETRIC

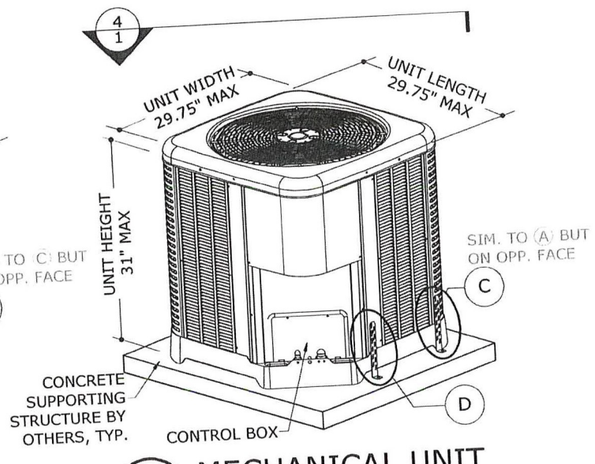

2/1 MECHANICAL UNIT
N.T.S. BACK ISOMETRIC

THESE ISOMETRICS ARE INTENDED FOR DIAGRAMMATICAL PURPOSES ONLY; ALTERNATE RHEEM UNITS MAY VARY IN APPEARANCE

PRODUCT REVISED
as complying with the Florida Building Code
NOA–No. 20-1102.09
Expiration Date 02/25/2026
By
Miami–Dade Product Control

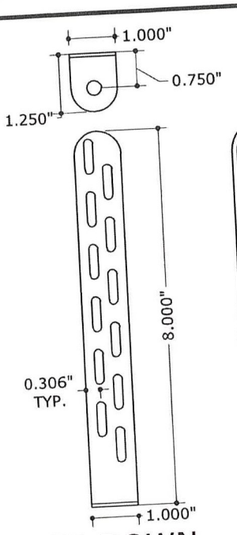

TIE-DOWN BRACKET

MIAMI TECH CLIP: 14GA (0.07") ASTM A653 Fu=90 KSI STEEL (CUTD8) OR 0.080" 5052-H32 ALUMINUM (CUTDA8), MIAMI TECH KIT # RRCUTDSMK OR RRCUTDASMK

APPROVED DESIGN CRITERIA:

ASCE 7 Vult=175 MPH (Vasd-136 MPH), EXPOSURE "D" AT GRADE INSTALLATION ONLY

DESIGN NOTES:

THIS SYSTEM HAS BEEN DESIGNED IN ACCORDANCE WITH ASCE 7 AND THE FLORIDA BUILDING CODE SEVENTH EDITION (2020) FOR USE WITHIN AND OUTSIDE THE HIGH VELOCITY HURRICANE ZONE. THE DESIGN CRITERIA CONSIDERS ASCE 7 SECTION 29 FOR "OTHER STRUCTURES - SOLID FREESTANDING WALLS" INSTALLATIONS AT GRADE. ALL DESIGN VARIABLES ARE IN ACCORDANCE WITH ASCE 7 CHAPTERS 26 & 29.

GENERAL NOTES:

1. THIS SYSTEM HAS BEEN DESIGNED AND SHALL BE FABRICATED IN ACCORDANCE WITH THE REQUIREMENTS OF THE FLORIDA BUILDING CODE SEVENTH EDITION (2020) & ASCE 7. THIS SYSTEM MAY BE USED WITHIN AND OUTSIDE THE HIGH VELOCITY HURRICANE ZONE. THIS DESIGN IS NOT INTENDED TO CERTIFY IMPACT RESISTANCE OF THE MECHANICAL UNIT CABINETRY.
2. NO 33-1/3% INCREASE IN ALLOWABLE STRESS HAS BEEN USED IN THE DESIGN OF THIS SYSTEM.
3. DESIGN & CERTIFICATION OF THE UNIT CABINETRY IS APPROVED THROUGH TEST REPORT#0323.01-15 BY AMERICAN TEST LAB OF SOUTH FLORIDA.
4. ALL DIMENSIONS AND THE MINIMUM WEIGHT (120 LB MINIMUM) OF MECHANICAL UNIT SHALL CONFORM TO LIMITATIONS STATED HEREIN. ALL MECHANICAL SPECIFICATIONS (CLEAR SPACE, TONNAGE, ETC.) SHALL BE AS PER MANUFACTURER RECOMMENDATIONS AND ARE THE EXPRESS RESPONSIBILITY OF THE CONTRACTOR.
5. TAPCONS REFERRED TO HEREIN SHALL BE ITW BUILDEX BRAND, ASTM F593 410 STAINLESS STEEL OR EQUIVALENT ONLY, INSTALLED TO 3000 PSI MIN CONCRETE. SEE ANCHOR SCHEDULE FOR ANCHOR REQUIREMENTS. ALL SHEET METAL SCREWS USED TO FASTEN BRACKETS TO MECHANICAL UNITS SHALL BE #10 (14 MIN THREADS PER INCH) ASTM F593 410 STAINLESS STEEL OR EQUIVALENT ONLY. PROVIDE (5) PITCHES MINIMUM PAST THE THREAD PLANE FOR SHEET METAL SCREWS. ALL FASTENERS SHALL HAVE APPROPRIATE CORROSION PROTECTION TO PREVENT ELECTROLYSIS.
6. ALL CONCRETE SPECIFIED HEREIN IS NOT PART OF THIS CERTIFICATION. AS A MINIMUM, ALL CONCRETE SHALL BE STRUCTURAL CONCRETE 4" MIN. THICK AND SHALL HAVE MINIMUM COMPRESSIVE STRENGTH OF 3000 PSI, UNLESS NOTED OTHERWISE.
7. THE CONTRACTOR IS RESPONSIBLE TO INSULATE ALL MEMBERS FROM DISSIMILAR MATERIALS TO PREVENT ELECTROLYSIS.
8. ELECTRICAL GROUND, WHEN REQUIRED, TO BE DESIGNED & INSTALLED BY OTHERS.
9. THE ADEQUACY OF ANY EXISTING STRUCTURE TO WITHSTAND SUPERIMPOSED LOADS SHALL BE VERIFIED BY THE ONSITE DESIGN PROFESSIONAL AND IS NOT INCLUDED IN THIS CERTIFICATION.EXCEPT AS EXPRESSLY PROVIDED HEREIN, NO ADDITIONAL CERTIFICATIONS OR AFFIRMATIONS ARE INTENDED.
10. THE SYSTEM DETAILED HEREIN IS GENERIC AND DOES NOT PROVIDE INFORMATION FOR A SPECIFIC SITE. FOR SITE CONDITIONS DIFFERENT FROM THE CONDITIONS DETAILED HEREIN, A LICENSED ENGINEER OR REGISTERED ARCHITECT SHALL PREPARE SITE SPECIFIC DOCUMENTS FOR USE IN CONJUNCTION WITH THIS DOCUMENT.
11. WATER-TIGHTNESS OF EXISTING HOST SUBSTRATE SHALL BE THE FULL RESPONSIBILITY OF THE INSTALLING CONTRACTOR. CONTRACTOR SHALL ENSURE THAT ANY REMOVED OR ALTERED WATERPROOFING MEMBRANE IS RESTORED AFTER FABRICATION AND INSTALLATION OF STRUCTURE PROPOSED HEREIN. THIS ENGINEER SHALL NOT BE RESPONSIBLE FOR ANY WATERPROOFING OR LEAKAGE ISSUES WHICH MAY OCCUR AS WATER-TIGHTNESS SHALL BE THE FULL RESPONSIBILITY OF THE INSTALLING CONTRACTOR.
12. FOR AN EXPLANATION OF EXPOSURE CATEGORIES THAT ACCOMPANY THE Vult WIND SPEEDS USED IN THIS DOCUMENT, SEE SECTION 26.7 OF ASCE 7

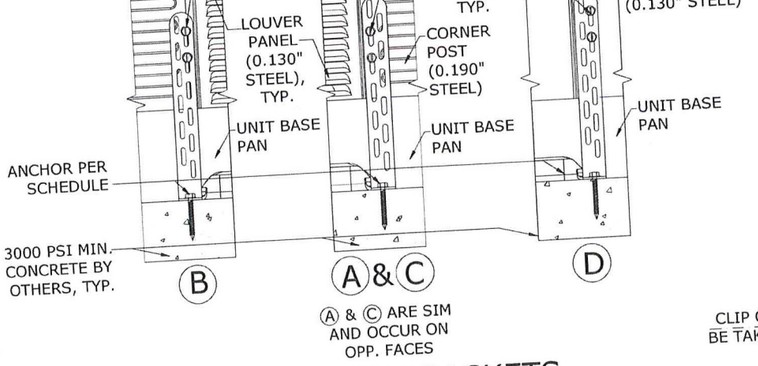

3/1 TIE-DOWN BRACKETS
N.T.S. ELEVATION

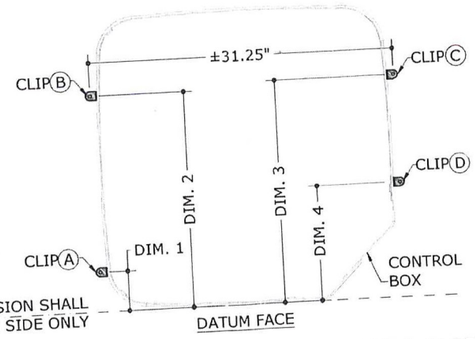

4/1 TIE-DOWN BRACKET LAYOUT
N.T.S. PLAN

ANCHOR SCHEDULE:

SUBSTRATE	DESCRIPTION
CONCRETE: (4" THICK MIN, 3000 PSI MIN.)	(1)-1/4"Ø STAINLESS STEEL ITW BUILDEX TAPCON, 1¾" FULL EMBED TO CONCRETE, 2½" MIN. EDGE DISTANCE, 3" MIN. SPACING TO ANY ADJACENT ANCHOR.

TIE-DOWN BRACKET OFFSETS:

DIM. 1	4.50" MAX OFFSET FROM DATUM FACE
DIM. 2	24.50" MIN OFFSET FROM DATUM FACE
DIM. 3	25.50" MIN OFFSET FROM DATUM FACE
DIM. 4	13" MAX OFFSET FROM DATUM FACE

VISIT ECALC.IO/28800
FOR SITE SPECIFIC DEVIATIONS & MORE INFORMATION ABOUT THIS DOCUMENT OR SCAN THIS QR CODE
VISIT ENGINEERINGEXPRESS.COM/RHEEM FOR ADDITIONAL PLANS, REPORTS & RESOURCES

ENGINEERING EXPRESS®
CORPORATE OFFICE:
160 SW 12th AVE, SUITE 106
DEERFIELD BEACH, FL 33442
(954) 354-0660 | (866) 396-9999
TEAM@ENGINEERINGEXPRESS.COM
ENGINEERINGEXPRESS.COM

RHEEM SALES COMPANY, INC.
1100 ABERNATHY ROAD SUITE 1400
ATLANTA, GA
(770) 351-3000

MECHANICAL UNIT
STEEL TIE-DOWN CLIPS
FLORIDA BUILDING CODE SEVENTH EDITION (2020)

REMARKS	DRWN	CHKD	DATE
INIT ISSUE	JAC	TSB	05/14/15
2017 FBC UPDATE	LAO	FLB	01/12/18
2020 FBC	CCB	RWN	10/19/20
	-	-	-
	-	-	-
	-	-	-

THIS DOCUMENT IS THE PROPERTY OF ENGINEERING EXPRESS. AND SHALL NOT BE REPRODUCED IN WHOLE OR PART WITHOUT WRITTEN CONSENT OF ENGINEERING EXPRESS. ALTERATIONS, ADDITIONS OR OTHER MARKINGS TO THIS DOCUMENT ARE NOT PERMITTED AND INVALIDATE OUR CERTIFICATION.
COPYRIGHT ENGINEERING EXPRESS®

20-28800GA

SCALE: NTS UNLESS NOTED

1 OF 7

V:\Projects\20-28800 - NOA 18-0712.07 - Wind Load Cert of Mechanical Unit\WP\2020 FBC\40 - 20-28800 - NOA18-0719.07 - DWGp1-4.dwg
10/22/2020 - 3:14pm rickn

RHEEM SALES COMPANY, INC.

WIND LOAD CERTIFICATION OF MECHANICAL UNIT CABINETRY AND STEEL/ALUMINUM TIE-DOWN CLIPS: AT GRADE MOUNTED APPLICATIONS

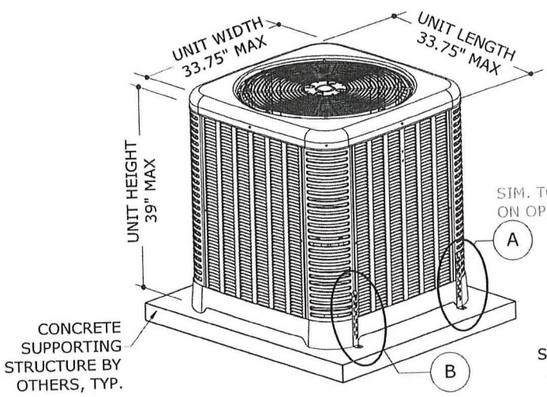

1/1 MECHANICAL UNIT — FRONT ISOMETRIC — N.T.S.

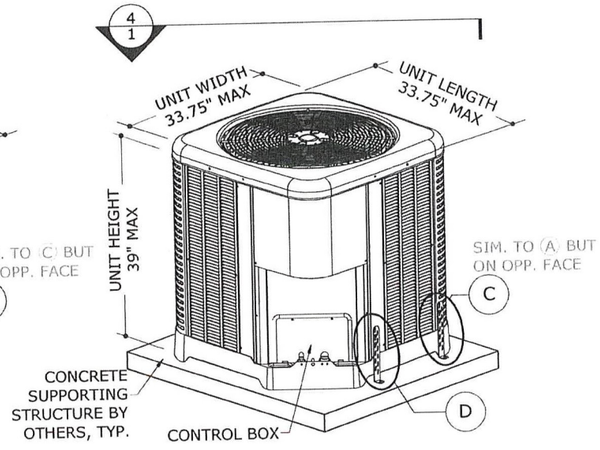

2/1 MECHANICAL UNIT — BACK ISOMETRIC — N.T.S.

THESE ISOMETRICS ARE INTENDED FOR DIAGRAMMATICAL PURPOSES ONLY; ALTERNATE RHEEM UNITS MAY VARY IN APPEARANCE

TIE-DOWN BRACKET

MIAMI TECH CLIP: 14GA (0.07") ASTM A653 Fu=90 KSI STEEL (CUTD8) OR 0.080" 5052-H32 ALUMINUM (CUTDA8), MIAMI TECH KIT # RRCUTDSMK OR RRCUTDASMK

(2)-#10 SMS PER BRACKET FOR UNITS UP TO 35" TALL. (3)-#10 SMS PER BRACKET FOR UNITS UP TO 39" TALL (ONLY (2) SMS SHOWN BELOW)

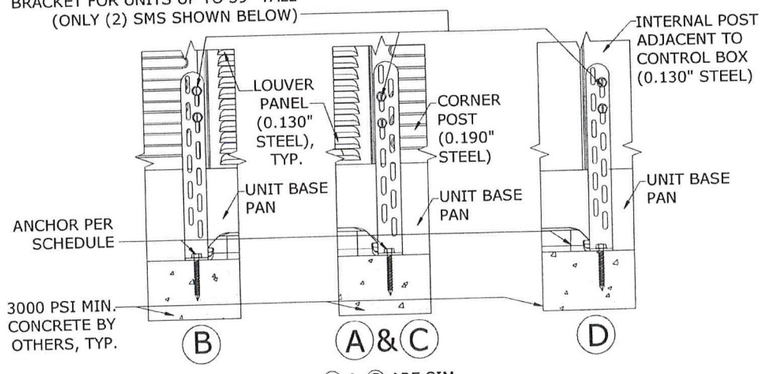

Ⓐ & Ⓒ ARE SIM AND OCCUR ON OPP. FACES

3/1 TIE-DOWN BRACKETS — ELEVATION — N.T.S.

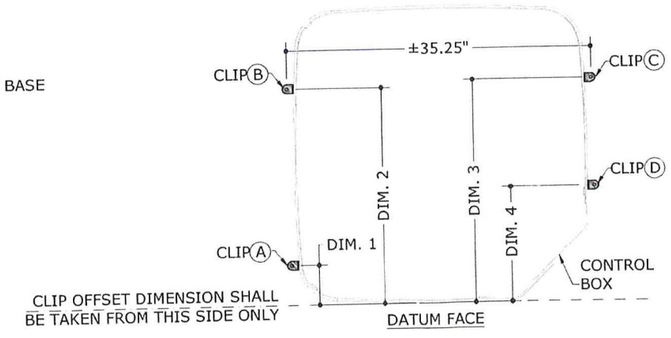

4/1 TIE-DOWN BRACKET LAYOUT — PLAN — N.T.S.

ANCHOR SCHEDULE:

SUBSTRATE	DESCRIPTION
CONCRETE: (4" THICK MIN, 3000 PSI MIN.)	(1)-1/4"Ø STAINLESS STEEL ITW BUILDEX TAPCON, 1¾" FULL EMBED TO CONCRETE, 2½" MIN. EDGE DISTANCE, 3" MIN. SPACING TO ANY ADJACENT ANCHOR.

TIE-DOWN BRACKET OFFSETS:

DIM. 1	4.50" MAX OFFSET FROM DATUM FACE
DIM. 2	28.00" MIN OFFSET FROM DATUM FACE
DIM. 3	29.00" MIN OFFSET FROM DATUM FACE
DIM. 4	13.00" MAX OFFSET FROM DATUM FACE

PRODUCT REVISED
as complying with the Florida Building Code
NOA–No. 20-1102.09
Expiration Date 02/25/2026
By Miami–Dade Product Control

FRANK BENNARDO, PE
PE# 0046549 CA# 9885
No 46549
OCT 22 2020
STATE OF FLORIDA
PROFESSIONAL ENGINEER

DIGITAL SEAL NOTICE:
IF THIS DOCUMENT IS DIGITALLY SIGNED, THIS SHEET IS PART OF A DIGITALLY SIGNED FILE IT SHALL REMAIN IN DIGITAL FORMAT, SHALL BE VERIFIED BY ELECTRONIC MEANS, & PRINTED COPIES OF THIS DOCUMENT ARE NOT CONSIDERED SIGNED AND SEALED.
PRINTED DOCUMENT NOTICE:
IF THIS DOCUMENT IS PRINTED & DOESN'T CONTAIN AN ENGINEER'S ORIGINAL SIGNATURE & SEAL, THIS DOCUMENT IS VOID & NOT VALID FOR USE. PHOTOCOPIES ARE NOT PERMITTED FOR USE.

ENGINEERING EXPRESS
CORPORATE OFFICE:
160 SW 12th AVE, SUITE 106
DEERFIELD BEACH, FL 33442
(954) 354-0660 | (866) 396-9999
TEAM@ENGINEERINGEXPRESS.COM
ENGINEERINGEXPRESS.COM

RHEEM SALES COMPANY, INC.
1100 ABERNATHY ROAD SUITE 1400
ATLANTA, GA
(770) 351-3000

MECHANICAL UNIT
STEEL TIE-DOWN CLIPS
FLORIDA BUILDING CODE SEVENTH EDITION (2020)

REMARKS	DRWN	CHKD	DATE
INIT ISSUE	JAC	TSB	05/14/15
2017 FBC UPDATE	LAO	FLB	01/12/18
2020 FBC	CCB	RWN	10/19/20
-	-	-	-
-	-	-	-

THIS DOCUMENT IS THE PROPERTY OF ENGINEERING EXPRESS, AND SHALL NOT BE REPRODUCED IN WHOLE OR PART WITHOUT WRITTEN CONSENT OF ENGINEERING EXPRESS. ALTERATIONS, ADDITIONS, OR OTHER MARKINGS TO THIS DOCUMENT ARE NOT PERMITTED AND INVALIDATE OUR CERTIFICATION.
COPYRIGHT ENGINEERING EXPRESS®

20-28800GB
SCALE: NTS UNLESS NOTED
2 OF 7

V:\Projects\20-28800 - NOA 18-0712.07 - Wind Load Cert of Mechanical Unit\WP\2020 FBC\40 - 20-28800 - NOA18-0719.07 - DWGp1-4.dwg
10/22/2020 - 3:14pm rickn

RHEEM SALES COMPANY, INC.

WIND LOAD CERTIFICATION OF MECHANICAL UNIT CABINETRY AND STEEL/ALUMINUM TIE-DOWN CLIPS: AT GRADE MOUNTED APPLICATIONS

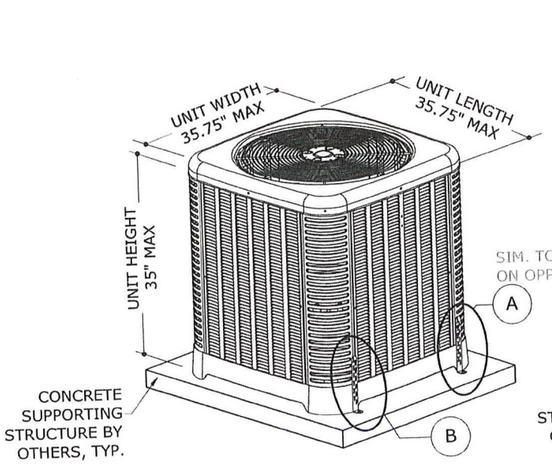

1/1 MECHANICAL UNIT — FRONT ISOMETRIC
N.T.S.

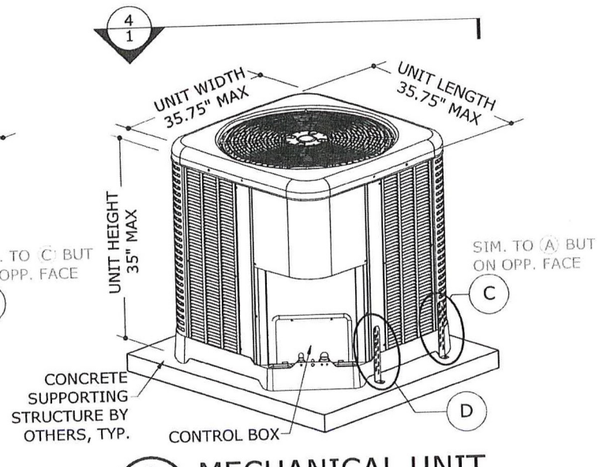

2/1 MECHANICAL UNIT — BACK ISOMETRIC
N.T.S.

THESE ISOMETRICS ARE INTENDED FOR DIAGRAMMATICAL PURPOSES ONLY; ALTERNATE RHEEM UNITS MAY VARY IN APPEARANCE

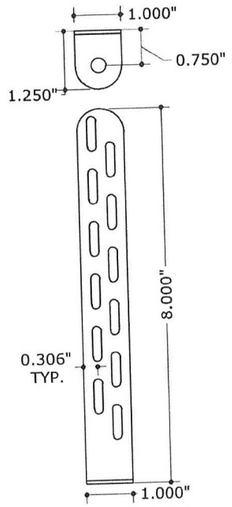

TIE-DOWN BRACKET

MIAMI TECH CLIP: 14GA (0.07") ASTM A653 Fu=90 KSI STEEL (CUTD8) OR 0.080" 5052-H32 ALUMINUM (CUTDA8), MIAMI TECH KIT # RRCUTDSMK OR RRCUTDASMK

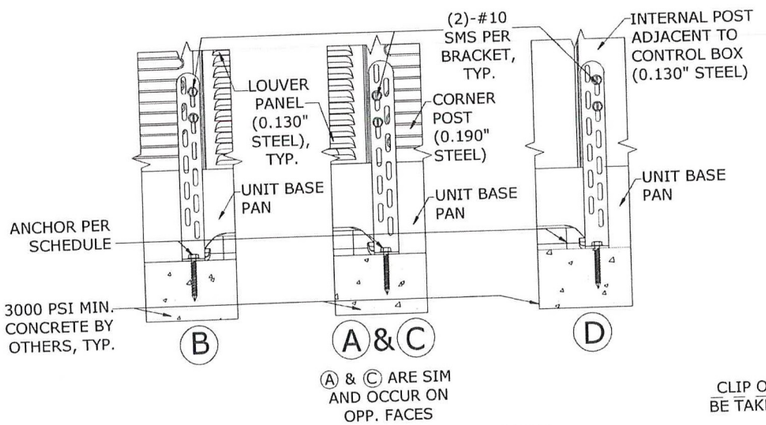

Ⓐ & Ⓒ ARE SIM AND OCCUR ON OPP. FACES

3/1 TIE-DOWN BRACKETS — ELEVATION
N.T.S.

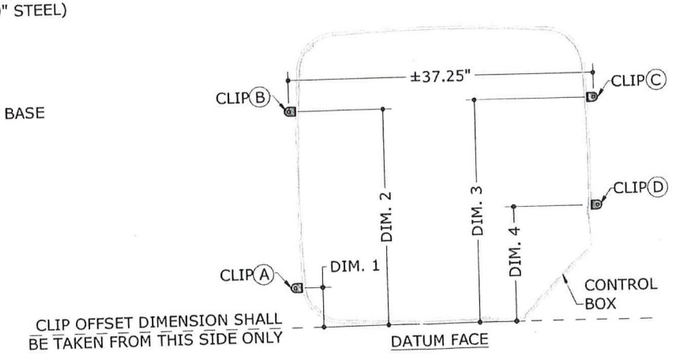

4/1 TIE-DOWN BRACKET LAYOUT — PLAN
N.T.S.

ANCHOR SCHEDULE:

SUBSTRATE	DESCRIPTION
CONCRETE: (4" THICK MIN, 3000 PSI MIN.)	(1)-1/4"Ø STAINLESS STEEL ITW BUILDEX TAPCON, 1¾" FULL EMBED TO CONCRETE, 2½" MIN. EDGE DISTANCE, 3" MIN. SPACING TO ANY ADJACENT ANCHOR.

TIE-DOWN BRACKET OFFSETS:

DIM. 1	4.50" MAX OFFSET FROM DATUM FACE
DIM. 2	30.00" MIN OFFSET FROM DATUM FACE
DIM. 3	31.00" MIN OFFSET FROM DATUM FACE
DIM. 4	13.00" MAX OFFSET FROM DATUM FACE

PRODUCT REVISED
as complying with the Florida Building Code
NOA-No. 20-1102.09
Expiration Date 02/25/2026
By
Miami-Dade Product Control

FRANK BENIARDO, PE
PE# 0046549 CA# 9885
STATE OF FLORIDA LICENSE No 46549
OCT 22 2020

DIGITAL SEAL NOTICE:
IF THIS DOCUMENT IS DIGITALLY SIGNED, THIS SHEET IS PART OF A DIGITALLY SIGNED FILE. IT SHALL REMAIN IN DIGITAL FORMAT, SHALL BE VERIFIED BY ELECTRONIC MEANS, & PRINTED COPIES OF THIS DOCUMENT ARE NOT CONSIDERED SIGNED AND SEALED.
PRINTED DOCUMENT NOTICE:
IF THIS DOCUMENT IS PRINTED & DOESN'T CONTAIN AN ENGINEER'S ORIGINAL SIGNATURE & SEAL, THIS DOCUMENT IS VOID & NOT VALID FOR USE. PHOTOCOPIES ARE NOT PERMITTED FOR USE.

ENGINEERING EXPRESS
CORPORATE OFFICE:
160 SW 12th AVE, SUITE 106
DEERFIELD BEACH, FL 33442
(954) 354-0660 | (866) 396-9999
TEAM@ENGINEERINGEXPRESS.COM
ENGINEERINGEXPRESS.COM

RHEEM SALES COMPANY, INC.
1100 ABERNATHY ROAD SUITE 1400
ATLANTA, GA
(770) 351-3000

MECHANICAL UNIT
STEEL TIE-DOWN CLIPS
FLORIDA BUILDING CODE SEVENTH EDITION (2020)

REMARKS	DRWN	CHKD	DATE
INIT ISSUE	JAC	TSB	05/14/15
2017 FBC UPDATE	LAO	FLB	01/12/18
2020 FBC	CCB	RWN	10/19/20
-	-	-	-
-	-	-	-

THIS DOCUMENT IS THE PROPERTY OF ENGINEERING EXPRESS, AND SHALL NOT BE REPRODUCED IN WHOLE OR PART WITHOUT WRITTEN CONSENT OF ENGINEERING EXPRESS. ALTERATIONS, ADDITIONS, OR OTHER MARKINGS TO THIS DOCUMENT ARE NOT PERMITTED AND INVALIDATE EOR CERTIFICATION.
COPYRIGHT ENGINEERING EXPRESS®

20-28800GC
SCALE: NTS UNLESS NOTED
3 OF 7

V:\Projects\20-28800 - NOA 18-0712.07 - Wind Load Cert of Mechanical Unit\WP\2020 FBC\40 - 20-28800 - NOA18-0719.07 - DWGp1-4.dwg
10/22/2020 - 3:14pm rickn

RHEEM SALES COMPANY, INC.

WIND LOAD CERTIFICATION OF MECHANICAL UNIT CABINETRY AND STEEL/ALUMINUM TIE-DOWN CLIPS: AT GRADE MOUNTED APPLICATIONS

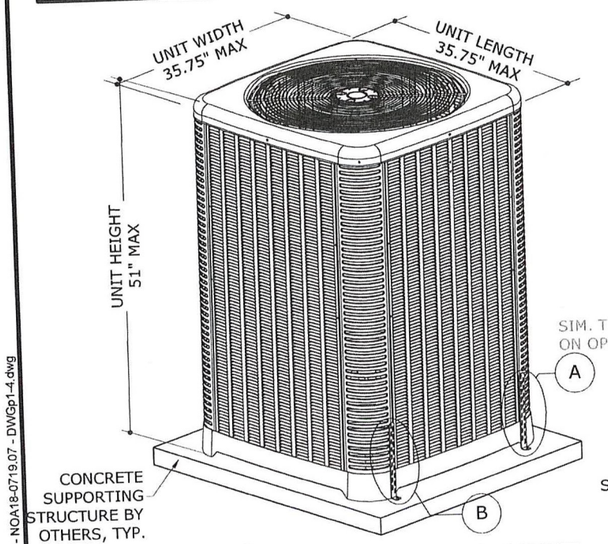

1 / 1 MECHANICAL UNIT
N.T.S. FRONT ISOMETRIC

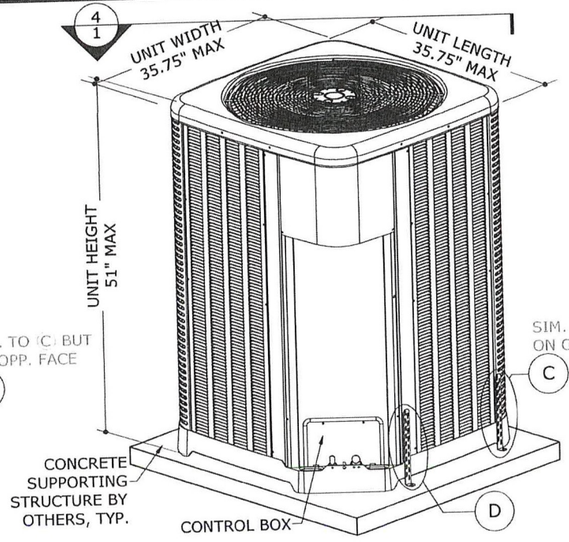

2 / 1 MECHANICAL UNIT
N.T.S. BACK ISOMETRIC

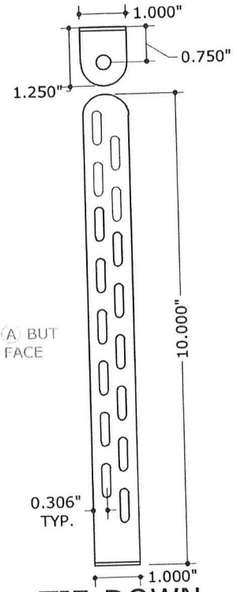

TIE-DOWN BRACKET

MIAMI TECH CLIP: 14GA (0.07") ASTM A653 Fu=90 KSI STEEL (CUTD10) OR 0.080" 5052-H32 ALUMINUM (CUTDA10), MIAMI TECH KIT # RRCUTDLK OR RRCUTDALK

THESE ISOMETRICS ARE INTENDED FOR DIAGRAMMATICAL PURPOSES ONLY; ALTERNATE RHEEM UNITS MAY VARY IN APPEARANCE

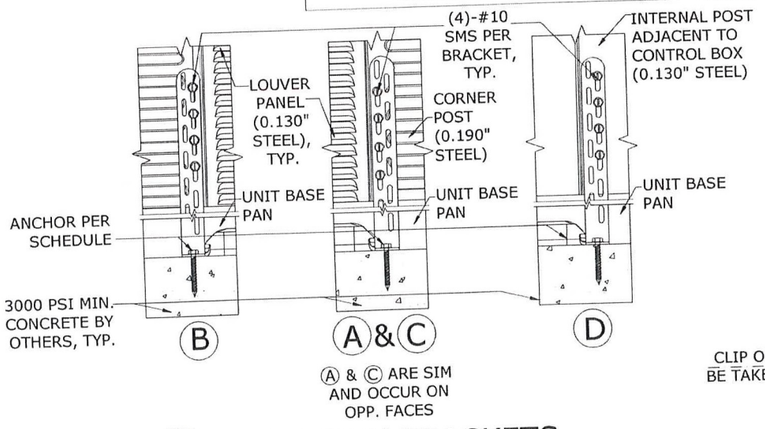

Ⓐ & Ⓒ ARE SIM AND OCCUR ON OPP. FACES

3 / 1 TIE-DOWN BRACKETS
N.T.S. ELEVATION

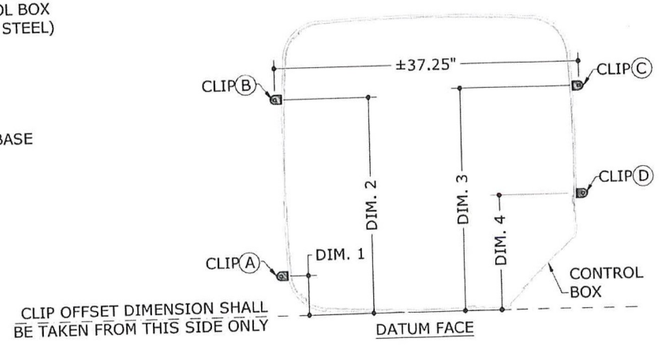

4 / 1 TIE-DOWN BRACKET LAYOUT
N.T.S. PLAN

ANCHOR SCHEDULE:

SUBSTRATE	DESCRIPTION
CONCRETE: (4" THICK MIN, 3000 PSI MIN.)	(1)-1/4"Ø CARBON STEEL SIMPSON STRONG BOLT 2, 1¾" MIN EMBED TO CONCRETE, 3" MIN. EDGE DISTANCE, 3" MIN. SPACING TO ANY ADJACENT ANCHOR.
	(1)-1/4"Ø CARBON STEEL DEWALT WEDGE BOLT+, 2⅛" MIN EMBED TO CONCRETE, 3" MIN. EDGE DISTANCE, 3" MIN. SPACING TO ANY ADJACENT ANCHOR.

SUPPORTING CONCRETE SUBSTRATE DEPTH SHALL BE A MINIMUM 1.5xANCHOR EMBED.
EITHER ANCHOR FROM THIS SCHEDULE MAY BE USED FOR INSTALLATION.

TIE-DOWN BRACKET OFFSETS:

DIM. 1	4.50" MAX OFFSET FROM DATUM FACE
DIM. 2	30.00" MIN OFFSET FROM DATUM FACE
DIM. 3	31.00" MIN OFFSET FROM DATUM FACE
DIM. 4	13.00" MAX OFFSET FROM DATUM FACE

PRODUCT REVISED
as complying with the Florida Building Code
NOA–No. 20-1102.09
Expiration Date 02/25/2026
By
Miami–Dade Product Control

FRANK BENNARDO, PE
PE# 0046549 CA# 9885
LICENSE
No 46549
STATE OF
PROFESSIONAL ENGINEER
OCT 22 2020

DIGITAL SEAL NOTICE:
IF THIS DOCUMENT IS DIGITALLY SIGNED, THIS SHEET IS PART OF A DIGITALLY SIGNED FILE. IT SHALL BE VERIFIED IN DIGITAL FORMAT, SHALL BE VERIFIED BY ELECTRONIC MEANS, & PRINTED COPIES OF THIS DOCUMENT ARE NOT CONSIDERED SIGNED AND SEALED.
PRINTED DOCUMENT NOTICE:
IF THIS DOCUMENT IS PRINTED & DOESN'T CONTAIN AN ENGINEER'S ORIGINAL SIGNATURE & SEAL, THIS DOCUMENT IS VOID & NOT VALID FOR USE. PHOTOCOPIES ARE NOT PERMITTED FOR USE.

ENGINEERING EXPRESS®
CORPORATE OFFICE:
160 SW 12th AVE, SUITE 106
DEERFIELD BEACH, FL 33442
(954) 354-0660 | (866) 396-9999
TEAM@ENGINEERINGEXPRESS.COM
ENGINEERINGEXPRESS.COM

RHEEM SALES COMPANY, INC.
1100 ABERNATHY ROAD SUITE 1400
ATLANTA, GA
(770) 351-3000

MECHANICAL UNIT
STEEL TIE-DOWN CLIPS
FLORIDA BUILDING CODE SEVENTH EDITION (2020)

REMARKS	DRWN	CHKD	DATE
INIT ISSUE	JAC	TSB	05/14/15
2017 FBC UPDATE	LAO	FLB	01/12/18
2020 FBC	CCB	RWN	10/19/20
	-	-	-
	-	-	-
	-	-	-

THIS DOCUMENT IS THE PROPERTY OF ENGINEERING EXPRESS, AND SHALL NOT BE REPRODUCED IN WHOLE OR IN PART WITHOUT WRITTEN CONSENT OF ENGINEERING EXPRESS. ALTERATIONS, ADDITIONS, OR OTHER MARKINGS TO THIS DOCUMENT ARE NOT PERMITTED AND INVALIDATE OUR CERTIFICATION.
COPYRIGHT ENGINEERING EXPRESS®

20-28800GD
SCALE: NTS UNLESS NOTED
4 OF 7

V:\Projects\20-28800 - NOA 18-0712.07 - Wind Load Cert of Mechanical Unit\WP\2020 FBC\140 - 20-28800 - NOA18-0719.07 - DWGp1-4.dwg
10/22/2020 - 3:21pm rickn

RHEEM SALES COMPANY, INC.

WIND LOAD CERTIFICATION OF MECHANICAL UNIT CABINETRY AND STEEL TIE-DOWN CLIPS: ROOF MOUNTED APPLICATIONS

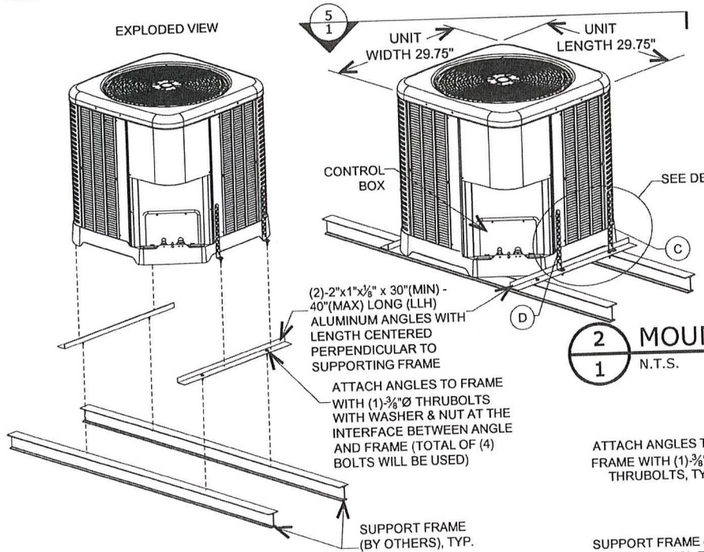

1/1 MOUNT EXPLODED VIEW
N.T.S. FRONT ISOMETRIC

THESE ISOMETRICS ARE INTENDED FOR DIAGRAMMATICAL PURPOSES ONLY; ALTERNATE RHEEM UNITS LISTED VARY IN APPEARANCE

2/1 MOUNT ISOMETRIC VIEW
N.T.S. FRONT ISO / BACK ISO

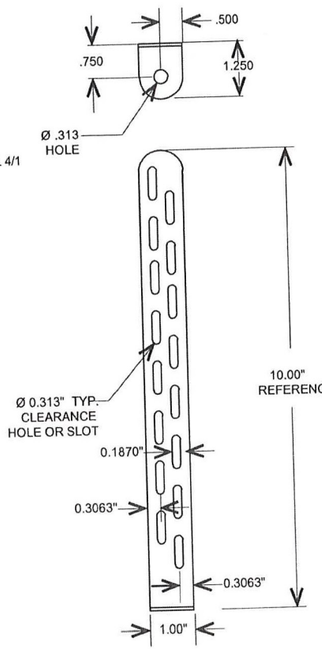

TIE-DOWN CLIP

MIAMI TECH CLIP: 14GA (0.07") ASTM A653 Fu=90 KSI STEEL (CUTD10), MIAMI TECH KIT # RRCUTD30K

3/1 SUPPORT ANGLE
N.T.S. ELEVATION

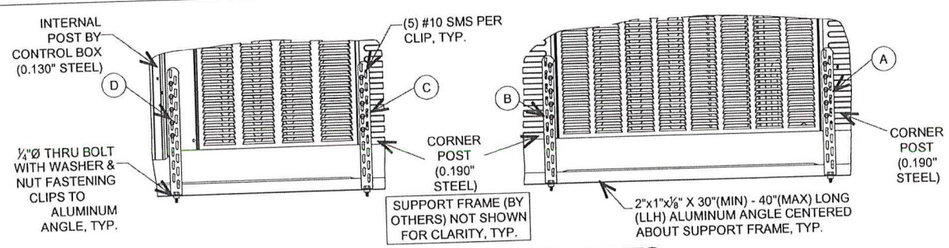

4/1 TIE-DOWN CLIP ATTACHMENTS
N.T.S. ELEVATIONS

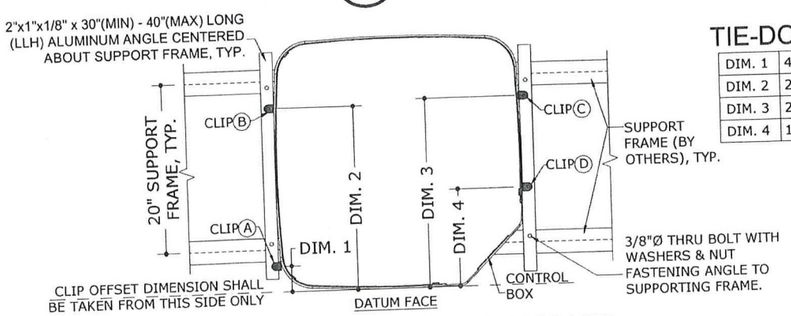

5/1 TIE-DOWN CLIP LAYOUT
N.T.S. PLAN

NOTE: UNIT SHALL BE CENTERED ABOUT THE 20" RAIL TO RAIL SUPPORTING FRAME (BY OTHERS)

TIE-DOWN CLIP OFFSETS:

DIM. 1	4.50" MAX OFFSET FROM DATUM FACE
DIM. 2	24.50" MIN OFFSET FROM DATUM FACE
DIM. 3	25.25" MIN OFFSET FROM DATUM FACE
DIM. 4	13" MAX OFFSET FROM DATUM FACE

PRODUCT REVISED
as complying with the Florida Building Code
NOA–No. 20-1102.09
Expiration Date 02/25/2026
By
Miami–Dade Product Control

VISIT ECALC.IO/28800
FOR SITE SPECIFIC DEVIATIONS & MORE INFORMATION ABOUT THIS DOCUMENT OR SCAN THIS QR CODE
VISIT ENGINEERINGEXPRESS.COM/RHEEM FOR ADDITIONAL PLANS, REPORTS & RESOURCES

APPROVED DESIGN CRITERIA:

APPROVED DESIGN CRITERIA:	
	200 PSF LATERAL WIND LOAD
	100 PSF UPLIFT WIND LOAD (CONCURRENT)

DESIGN NOTES:

SITE-SPECIFIC PRESSURE REQUIREMENTS AS DETERMINED IN ACCORDANCE WITH ASCE 7 AND CHAPTER 16 OF THE FLORIDA BUILDING CODE SHALL BE LESS THAN OR EQUAL TO THE DESIGN PRESSURE CAPACITY VALUES LISTED HEREIN FOR ANY ASSEMBLY AS SHOWN. DESIGN PRESSURE REQUIREMENTS SHALL BE DETERMINED BY A REGISTERED DESIGN PROFESSIONAL ON A JOB-SPECIFIC BASIS IN ACCORDANCE WITH THE GOVERNING CODE.

GENERAL NOTES:

1. THIS SYSTEM HAS BEEN DESIGNED AND SHALL BE FABRICATED IN ACCORDANCE WITH THE REQUIREMENTS OF THE FLORIDA BUILDING CODE SEVENTH EDITION (2020). THIS SYSTEM MAY BE USED WITHIN AND OUTSIDE THE HIGH VELOCITY HURRICANE ZONE. THIS DESIGN IS NOT INTENDED TO CERTIFY IMPACT RESISTANCE OF THE MECHANICAL UNIT CABINETRY.
2. NO 33-1/3% INCREASE IN ALLOWABLE STRESS HAS BEEN USED IN THE DESIGN OF THIS SYSTEM.
3. DESIGN & CERTIFICATION OF THE UNIT CABINETRY IS APPROVED THROUGH TEST REPORT#0323.01-15 BY AMERICAN TEST LAB OF SOUTH FLORIDA.
4. ALL DIMENSIONS AND THE MINIMUM WEIGHT (120 LB MINIMUM) OF MECHANICAL UNIT SHALL CONFORM TO LIMITATIONS STATED HEREIN. ALL MECHANICAL SPECIFICATIONS (CLEAR SPACE, TONNAGE, ETC.) SHALL BE AS PER MANUFACTURER RECOMMENDATIONS AND ARE THE EXPRESS RESPONSIBILITY OF THE CONTRACTOR.
5. ALL SHEET METAL SCREWS USED TO FASTEN CLIPS TO MECHANICAL UNITS SHALL BE #10 (14 MIN THREADS PER INCH) GRADE 5 STEEL OR EQUIVALENT ONLY. BOLTS USED TO FASTEN ALUMINUM ANGLES TO SUPPORTING FRAME (BY OTHERS) SHALL BE ASTM F593 410 STAINLESS STEEL OR EQUIVALENT AND SHALL UTILIZE SAE GRADE WASHERS & NUTS. PROVIDE (5) PITCHES MINIMUM PAST THE THREAD PLANE FOR SHEET METAL SCREWS. ALL FASTENERS SHALL HAVE APPROPRIATE CORROSION PROTECTION TO PREVENT ELECTROLYSIS. ALL FASTENER CONNECTIONS TO ALUMINUM SHALL PROVIDE 2xDIAMETER EDGE DISTANCE.
6. ALUMINUM ANGLES SPECIFIED HEREIN SHALL BE 6061-T6 ALUMINUM ONLY.
7. CONNECTIONS TO THE SUPPORTING FRAME (BY OTHERS) CONSIDER A FRAME MEMBER THAT IS 6061-T6 MIN ALUMINUM WITH A MINIMUM 0.094" THICK FLANGE AT ATTACHMENT POINT. PERFORMANCE OF THE RAIL AS A STRUCTURAL MEMBER TO SUPPORT THE UNIT ASSEMBLY SHALL BE PER SEPARATE CERTIFICATION.
8. THE CONTRACTOR IS RESPONSIBLE TO INSULATE ALL MEMBERS FROM DISSIMILAR MATERIALS TO PREVENT ELECTROLYSIS.
9. ELECTRICAL GROUND, WHEN REQUIRED, TO BE DESIGNED & INSTALLED BY OTHERS.
10. THE ADEQUACY OF ANY EXISTING STRUCTURE TO WITHSTAND SUPERIMPOSED LOADS SHALL BE VERIFIED BY THE ONSITE DESIGN PROFESSIONAL AND IS NOT INCLUDED IN THIS CERTIFICATION.EXCEPT AS EXPRESSLY PROVIDED HEREIN, NO ADDITIONAL CERTIFICATIONS OR AFFIRMATIONS ARE INTENDED.
11. THE SYSTEM DETAILED HEREIN IS GENERIC AND DOES NOT PROVIDE INFORMATION FOR A SPECIFIC SITE. FOR SITE CONDITIONS DIFFERENT FROM THE CONDITIONS DETAILED HEREIN, A LICENSED ENGINEER OR REGISTERED ARCHITECT SHALL PREPARE SITE SPECIFIC DOCUMENTS FOR USE IN CONJUNCTION WITH THIS DOCUMENT.
12. WATER-TIGHTNESS OF EXISTING HOST SUBSTRATE SHALL BE THE FULL RESPONSIBILITY OF THE INSTALLING CONTRACTOR. CONTRACTOR SHALL ENSURE THAT ANY REMOVED OR ALTERED WATERPROOFING MEMBRANE IS RESTORED AFTER FABRICATION AND INSTALLATION OF STRUCTURE PROPOSED HEREIN. THIS ENGINEER SHALL NOT BE RESPONSIBLE FOR ANY WATERPROOFING OR LEAKAGE ISSUES WHICH MAY OCCUR AS WATER-TIGHTNESS SHALL BE THE FULL RESPONSIBILITY OF THE INSTALLING CONTRACTOR.

FRANK BENNARDO, PE
PE# 0046549 CA# 9885
FRANK L. BENNARDO LICENSE No. 46549 STATE OF FLORIDA PROFESSIONAL ENGINEER
OCT 22 2020

DIGITAL SEAL NOTICE: IF THIS DOCUMENT IS DIGITALLY SIGNED, THIS SHEET IS PART OF A DIGITALLY SIGNED FILE. IT SHALL REMAIN IN DIGITAL FORMAT, SHALL BE VERIFIED BY ELECTRONIC MEANS, & PRINTED COPIES OF THIS DOCUMENT ARE NOT CONSIDERED SIGNED AND SEALED.
PRINTED DOCUMENT NOTICE: IF THIS DOCUMENT IS PRINTED & DOESN'T CONTAIN AN ENGINEER'S ORIGINAL SIGNATURE & SEAL, THIS DOCUMENT IS VOID & NOT VALID FOR USE. PHOTOCOPIES ARE NOT PERMITTED FOR USE.

ENGINEERING EXPRESS®
CORPORATE OFFICE:
160 SW 12th AVE, SUITE 106
DEERFIELD BEACH, FL 33442
(954) 354-0660 | (866) 396-9999
TEAM@ENGINEERINGEXPRESS.COM
ENGINEERINGEXPRESS.COM

RHEEM SALES COMPANY, INC.
1100 ABERNATHY ROAD SUITE 1400
ATLANTA, GA
(770) 351-3000

MECHANICAL UNIT
STEEL TIE-DOWN CLIPS
FLORIDA BUILDING CODE SEVENTH EDITION (2020)

REMARKS	DRWN	CHKD	DATE
INIT ISSUE	JAC	TSB	05/14/15
2017 FBC UPDATE	LAO	FLB	01/12/18
2020 FBC	CCB	RWN	10/19/20
	-	-	-
	-	-	-
	-	-	-

THIS DOCUMENT IS THE PROPERTY OF ENGINEERING EXPRESS, AND SHALL NOT BE REPRODUCED IN WHOLE OR PART WITHOUT WRITTEN CONSENT OF ENGINEERING EXPRESS. ALTERATIONS, ADDITIONS OR OTHER MARKINGS TO THIS DOCUMENT ARE NOT PERMITTED, AND INVALIDATE OUR CERTIFICATION.
COPYRIGHT ENGINEERING EXPRESS®

20-28800RE

SCALE: NTS UNLESS NOTED

5 OF 7

V:\Projects\20-28800 - NOA 18-07.12.07 - Wind Load Cert of Mechanical Unit\WP\2020 FBC\40 - 20-28800 - NOA18-07.19.07 - DWG\05-7.dwg
0/22/2020 - 3:25pm rickn

RHEEM SALES COMPANY, INC.

WIND LOAD CERTIFICATION OF MECHANICAL UNIT CABINETRY AND STEEL TIE-DOWN CLIPS: ROOF MOUNTED APPLICATIONS

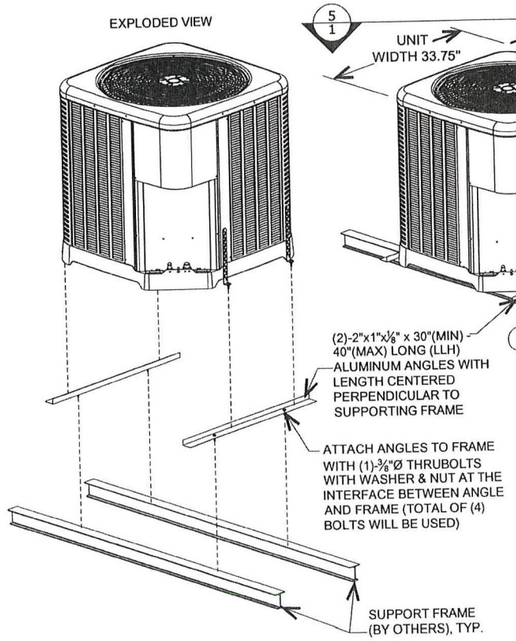

1/1 MOUNT EXPLODED VIEW
N.T.S. FRONT ISOMETRIC

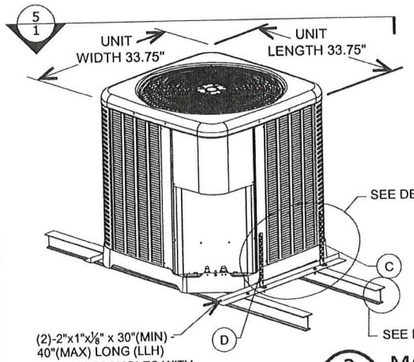

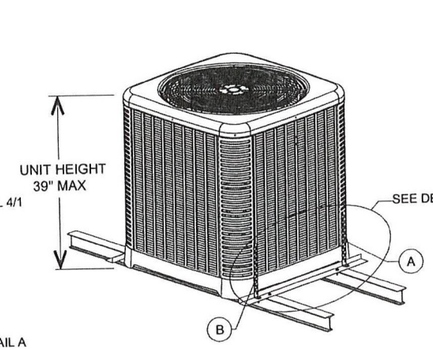

2/1 MOUNT ISOMETRIC VIEW
N.T.S. FRONT ISO / BACK ISO

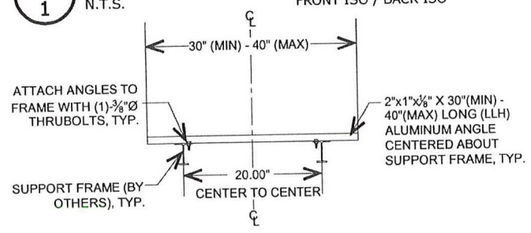

3/1 SUPPORT ANGLE
N.T.S. ELEVATION

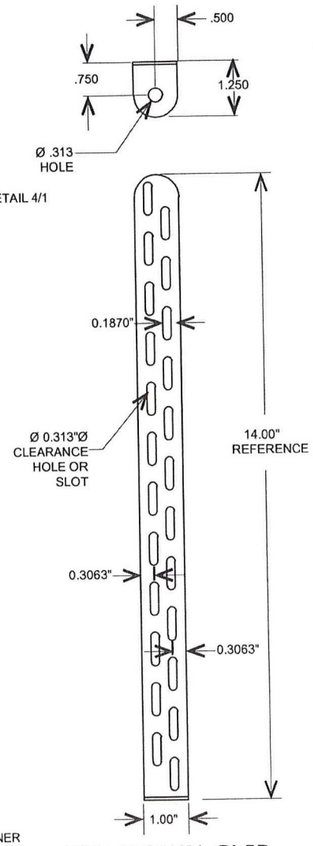

TIE-DOWN CLIP

MIAMI TECH CLIP: 12GA (0.09") ASTM A653 Fu=90 KSI STEEL (CUTD14), MIAMI TECH KIT # RRCUTD34K

THESE ISOMETRICS ARE INTENDED FOR DIAGRAMMATICAL PURPOSES ONLY; ALTERNATE RHEEM UNITS MAY VARY IN APPEARANCE

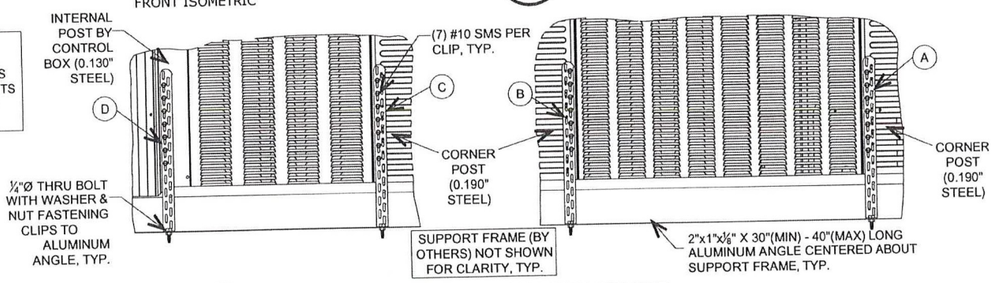

4/1 TIE-DOWN CLIP ATTACHMENTS
N.T.S. ELEVATIONS

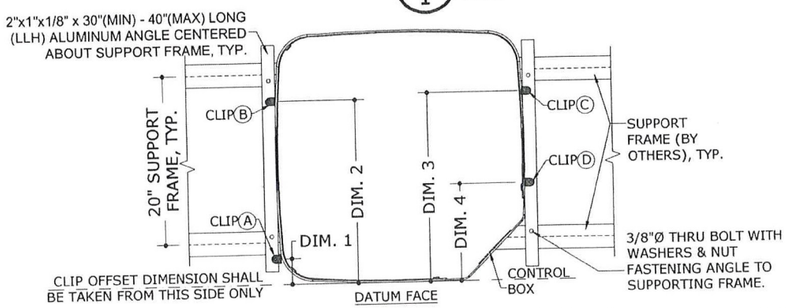

5/1 TIE-DOWN CLIP LAYOUT
N.T.S. PLAN

NOTE: UNIT SHALL BE CENTERED ABOUT THE 20" RAIL TO RAIL SUPPORTING FRAME (BY OTHERS)

TIE-DOWN CLIP OFFSETS:

DIM. 1	4.50" MAX OFFSET FROM DATUM FACE
DIM. 2	28.00" MIN OFFSET FROM DATUM FACE
DIM. 3	29.00" MIN OFFSET FROM DATUM FACE
DIM. 4	13.00" MAX OFFSET FROM DATUM FACE

PRODUCT REVISED
as complying with the Florida Building Code
NOA-No. 20-1102.09
Expiration Date 02/25/2026
By
Miami-Dade Product Control

FRANK BENNARDO, PE
PE # 0046549 CA# 9885
LICENSE 46549 STATE OF FLORIDA
OCT 22 2020
PROFESSIONAL ENGINEER

DIGITAL SEAL NOTICE:
IF THIS DOCUMENT IS DIGITALLY SIGNED, THIS SHEET IS PART OF A DIGITALLY SIGNED FILE. IT SHALL REMAIN IN DIGITAL FORMAT, SHALL BE VERIFIED BY ELECTRONIC MEANS. PRINTED COPIES OF THIS DOCUMENT ARE NOT CONSIDERED SIGNED AND SEALED.
PRINTED DOCUMENT NOTICE:
IF THIS DOCUMENT IS PRINTED & DOESN'T CONTAIN AN ENGINEER'S ORIGINAL SIGNATURE & SEAL, THIS DOCUMENT IS VOID & NOT VALID FOR USE. PHOTOCOPIES ARE NOT PERMITTED FOR USE.

ENGINEERING EXPRESS®
CORPORATE OFFICE:
160 SW 12th AVE, SUITE 106
DEERFIELD BEACH, FL 33442
(954) 354-0660 | (866) 396-9999
TEAM@ENGINEERINGEXPRESS.COM
ENGINEERINGEXPRESS.COM

RHEEM SALES COMPANY, INC.
1100 ABERNATHY ROAD SUITE 1400
ATLANTA, GA
(770) 351-3000

MECHANICAL UNIT
STEEL TIE-DOWN CLIPS
FLORIDA BUILDING CODE SEVENTH EDITION (2020)

REMARKS	DRWN	CHKD	DATE
INIT ISSUE	JAC	TSB	05/14/15
2017 FBC UPDATE	LAO	FLB	01/12/18
2020 FBC	CCB	RWN	10/19/20
	-	-	-
	-	-	-
	-	-	-

THIS DOCUMENT IS THE PROPERTY OF ENGINEERING EXPRESS, AND SHALL NOT BE REPRODUCED IN WHOLE OR PART WITHOUT WRITTEN CONSENT OF ENGINEERING EXPRESS. ALTERATIONS, ADDITIONS, OR OTHER MARKINGS TO THIS DOCUMENT ARE NOT PERMITTED AND INVALIDATE OUR CERTIFICATION.
COPYRIGHT ENGINEERING EXPRESS®

20-28800RE

SCALE: NTS UNLESS NOTED

6 OF 7

V:\Projects\20-28800 - NOA 18-0712.07 - Wind Load Cert of Mechanical Unit\WP\2020 FBC\40 - 20-28800 - NOA18-0719.07 - DWGp5-7.dwg
10/22/2020 - 3:26pm rickn

RHEEM SALES COMPANY, INC.

WIND LOAD CERTIFICATION OF MECHANICAL UNIT CABINETRY AND STEEL TIE-DOWN CLIPS: ROOF MOUNTED APPLICATIONS

EXPLODED VIEW

THESE ISOMETRICS ARE INTENDED FOR DIAGRAMMATICAL PURPOSES ONLY; ALTERNATE RHEEM UNITS MAY VARY IN APPEARANCE

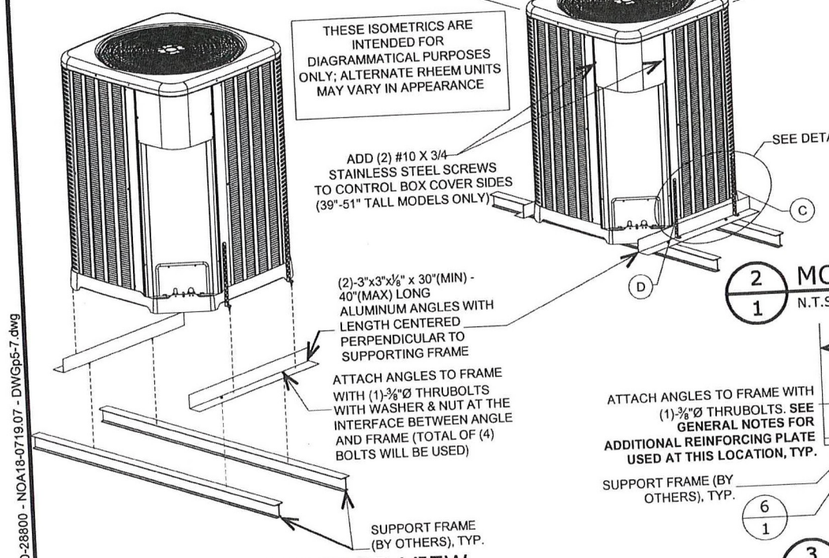

1/1 MOUNT EXPLODED VIEW — N.T.S. — FRONT ISOMETRIC

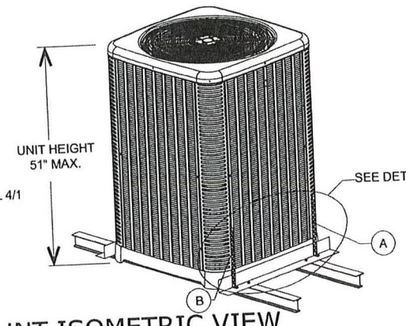

2/1 MOUNT ISOMETRIC VIEW — N.T.S. — FRONT ISO / BACK ISO

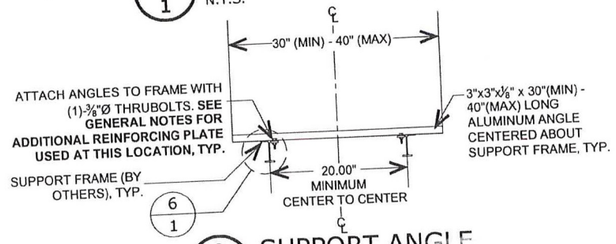

3/1 SUPPORT ANGLE — N.T.S. — ELEVATION

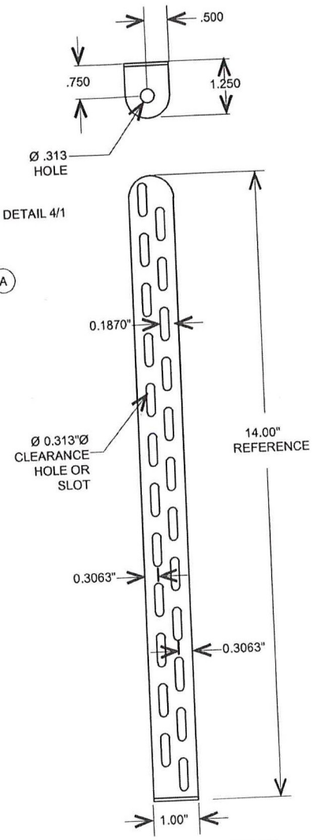

TIE-DOWN CLIP

MIAMI TECH CLIP: 12GA (0.09") ASTM A653 Fu=90 KSI STEEL (CUTD14), MIAMI TECH KIT # RRCUTD36K

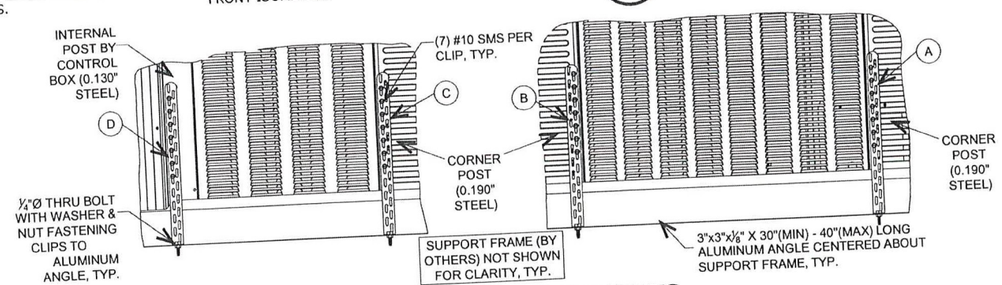

4/1 TIE-DOWN CLIP ATTACHMENTS — N.T.S. — ELEVATIONS

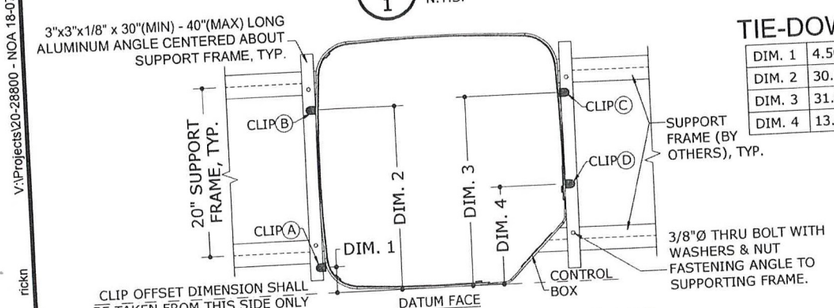

TIE-DOWN CLIP OFFSETS:

DIM. 1	4.50" MAX OFFSET FROM DATUM FACE
DIM. 2	30.00" MIN OFFSET FROM DATUM FACE
DIM. 3	31.00" MIN OFFSET FROM DATUM FACE
DIM. 4	13.00" MAX OFFSET FROM DATUM FACE

5/1 TIE-DOWN CLIP LAYOUT — N.T.S. — PLAN

NOTE: UNIT SHALL BE CENTERED ABOUT THE 20" RAIL TO RAIL SUPPORTING FRAME (BY OTHERS)

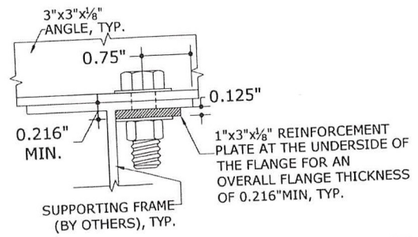

6/1 REINFORCING PLATE — 6" = 1'-0" — SECTION

PRODUCT REVISED
as complying with the Florida Building Code
NOA–No. 20-1102.09
Expiration Date 02/25/2026
By
Miami–Dade Product Control

PE# 0046549 CA# 9885

FRANK J. BENNARDO — LICENSE — No. 46549 — OCT 2 2020 — STATE OF FLORIDA — PROFESSIONAL ENGINEER

DIGITAL SEAL NOTICE: IF THIS DOCUMENT IS DIGITALLY SIGNED, THIS SHEET IS PART OF A DIGITALLY SIGNED FILE. IT SHALL REMAIN IN DIGITAL FORMAT, SHALL BE VERIFIED BY ELECTRONIC MEANS, & PRINTED COPIES OF THIS DOCUMENT ARE NOT CONSIDERED SIGNED AND SEALED.

PRINTED DOCUMENT NOTICE: IF THIS DOCUMENT IS PRINTED & DOESN'T CONTAIN AN ENGINEER'S ORIGINAL SIGNATURE & SEAL, THIS DOCUMENT IS VOID & NOT VALID FOR USE. PHOTOCOPIES ARE NOT PERMITTED FOR USE.

ENGINEERING EXPRESS®
CORPORATE OFFICE:
160 SW 12th AVE, SUITE 106
DEERFIELD BEACH, FL 33442
(954) 354-0660 | (866) 396-9999
TEAM@ENGINEERINGEXPRESS.COM
ENGINEERINGEXPRESS.COM

RHEEM SALES COMPANY, INC.
1100 ABERNATHY ROAD SUITE 1400
ATLANTA, GA
(770) 351-3000

MECHANICAL UNIT
STEEL TIE-DOWN CLIPS
FLORIDA BUILDING CODE SEVENTH EDITION (2020)

REMARKS	DRWN	CHKD	DATE
INIT ISSUE	JAC	TSB	05/14/15
2017 FBC UPDATE	LAO	FLB	01/12/18
2020 FBC	CCB	RWN	10/19/20
	-	-	-
	-	-	-

THIS DOCUMENT IS THE PROPERTY OF ENGINEERING EXPRESS, AND SHALL NOT BE REPRODUCED IN WHOLE OR PART WITHOUT WRITTEN CONSENT OF ENGINEERING EXPRESS. ALTERATIONS, ADDITIONS, OR OTHER MARKINGS TO THIS DOCUMENT ARE NOT PERMITTED AND INVALIDATE OUR CERTIFICATION.

COPYRIGHT ENGINEERING EXPRESS®

20-28800RE

SCALE: NTS UNLESS NOTED

7 OF 7

V:\Projects\20-28800 - NOA 18-0712.07 - Wind Load Cert of Mechanical Unit\WP\2020 FBC\40 - 20-28800 - NOA18-0719.07 - DWG\p5-7.dwg
10/22/2020 - 3:26pm rickn

CITY OF MIAMI SPRINGS
BUILDING DEPARTMENT
OFFICE COPY
CITY OF MIAMI SPRINGS
DEC 10 2021
RECEIVED

18 Gauge Angle Clips.

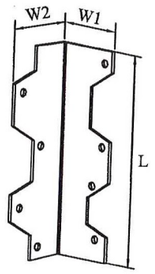

AB-7

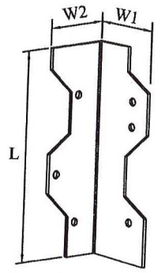

AB-5

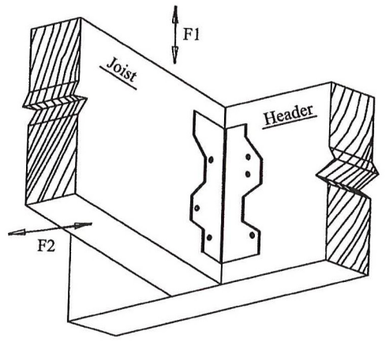

Typical Installation

Product Code	Dimensions (inches)			Fastener Schedule		Alowable Loads (lbs)	
	W1	W2	L	Header	Joist	F1	F2
AB5	1½	2 5/16	5	3-10dx1½"	3-10dx1½"	511	595
AB7	1½	2 5/16	7	4-10dx1½"	4-10dx1½"	582	794

Notes: Nail wider angle leg to Joist and Shorter leg to Header.

GENERAL NOTES:

1. Steel shall conform to ASTM A653, structural grade 33 (Min. yield 33 ksi) and a minimum galvanized coating of G 60 per ASTM A653.

2. Allowable loads are based on National Desing specifications (NDS) for wood construction, 2015/2018 and FBC 2017/2020.

3. Design loads are for Southern Pine species with a specific gravity of 0.55. Allowable loads for other species shall be adjusted accordingly.

4. Common wire nail values are based on NDS 2015/2018, G=0.55 and have been reduced for Penetration Depth factor P/10D.

5. Allowable loads for wind uplift have already been increased by a duration factor of 60% for anchor nail. Load values shown are without 33% steel stress increase.

6. Allowable loads for more than a single connection cannot be added together. A design load which is divided into components in the direction given must be evaluated as follows:

$$\frac{\text{Actual Uplift}}{\text{Allowable Uplift}} + \frac{\text{Actual L1}}{\text{Allowable L1}} + \frac{\text{Actual L2}}{\text{Allowable L2}} <= 1.0$$

7. Allowable loads are based on 1½" thick wood members unless otherwise noted.

8. All tie beams and grouted concrete masonry shall comply with FBC 2017/FBC 2020. Concrete for tie beams and grout and mortar for concrete masonry shall be a minimum of 2500 psi. Concrete masonry shall comply with ASTM C90.

9. All tests have been conducted in accordance with ASTM D-1761 and ASTM D-7147.

PRODUCT REVISED
as complying with the Florida Building Code
NOA-No. 20-0901.05
Expiration Date 05/22/2023
By
Miami-Dade Product Control

VIPIN N. TOLAT, PE (CIVIL)
FL. REG. # 12847
15123 LANTERN CREEK LANE
HOUSTON, TX 77068

8/21/2020

Nu-Vue Industries, Inc.
1053-1059 East 29 Street
Hialeah, Florida 33013
(305) 694-0397
Fax: (305) 694-0398

TRUSS AND TOP PLATE ANCHORS

DWG #:	Sheet:	Date:	Revisions:
NU-1	1 of 4	August 18, 2020	

Deep Seat Truss Anchor.. They are designed to resist lateral and uplift forces. The strap is made of 14 gauge steel and the seats of 20 gauge steel.

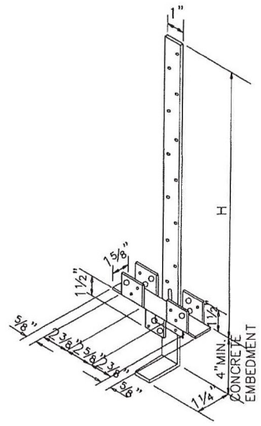

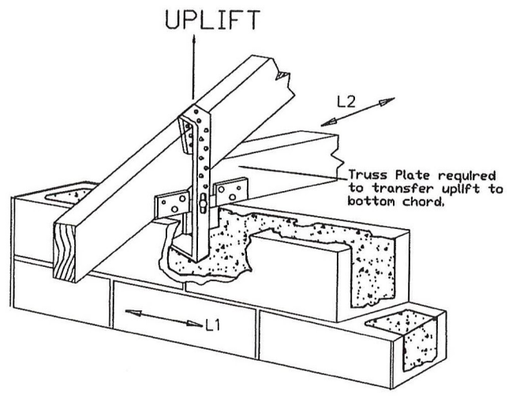

Assembly Product Code	Dimension H (inches)
NVSTA12	12
NVSTA16	16
NVSTA20	20
NVSTA22	22
NVSTA24	24

Total No. of Fasteners in Strap 10d x 1½"	Total No. of Fasteners in 20 GA. Seat 10d x 1½"	Allowable Loads (lbs)		
		Uplift [6]	L1 [6]	L2 [6]
5	6	1046	700	1049
6	6	1141	760	1144
7	6	1236	823	1239
8	6	1331	887	1335
9	6	1426	950	1430

Holden Double Strap Riveted Truss Anchor.. They are designed of 14 gauge steel plates to resist lateral and uplift forces. The seats are made of 20 gauge steel.

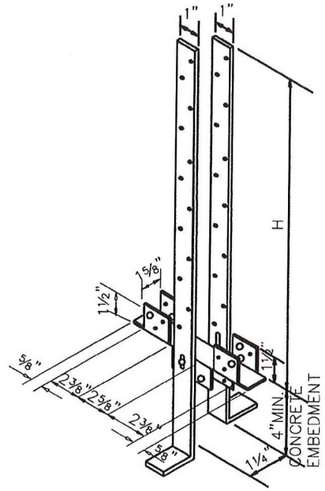

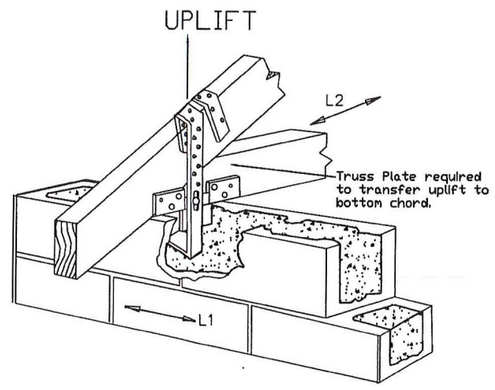

Assembly Product Code	Dimension H (inches)
NVHTA12	12
NVHTA16	16
NVHTA20	20
NVHTA22	22
NVHTA24	24

Total No. of Fasteners in two Straps 10d x 1½"	Total No. of Fasteners in 20 GA. Seat 10d x 1½"	Allowable Loads (lbs)			
		Uplift [6]	Uplift [5]	L1 [6]	L2 [6]
10	6	1506	1766	1050	1450
12	6	1695	1987	1181	1631
14	6	1883	2208	1312	1812
16	6	2071	2429	1444	1994
18	6	2259	2649	1575	2175

Notes:
1. Nails are necessary in straps and seat to achieve, desing loads.
2. See note 6, sheet 1 for combined loading.
3. Nails through chords shall not force the truss plates.
4. For general notes, see sheet 1.
5. For higher uplift loads, concrete shall be 3000 psi.
6. Based on min. 2500 psi concrete.

PRODUCT REVISED
as complying with the Florida Building Code
NOA-No. 20-0901.05
Expiration Date 05/22/2023
By
Miami-Dade Product Control

VIPIN N. TOLAT, PE (CIVIL)
FL. REG. # 12847
15123 LANTERN CREEK LANE
HOUSTON, TX 77068

8/21/2020

Nu-Vue Industries, Inc.
1053-1059 East 29 Street
Hialeah, Florida 33013
(305) 694-0397
Fax: (305) 694-0398

TRUSS AND TOP PLATE ANCHORS

DWG #:	Sheet:	Date:	Revisions:
NU-1	2 of 4	August 18, 2020	

12 Gauge NVTHJ Truss Hip & Jack Hanger

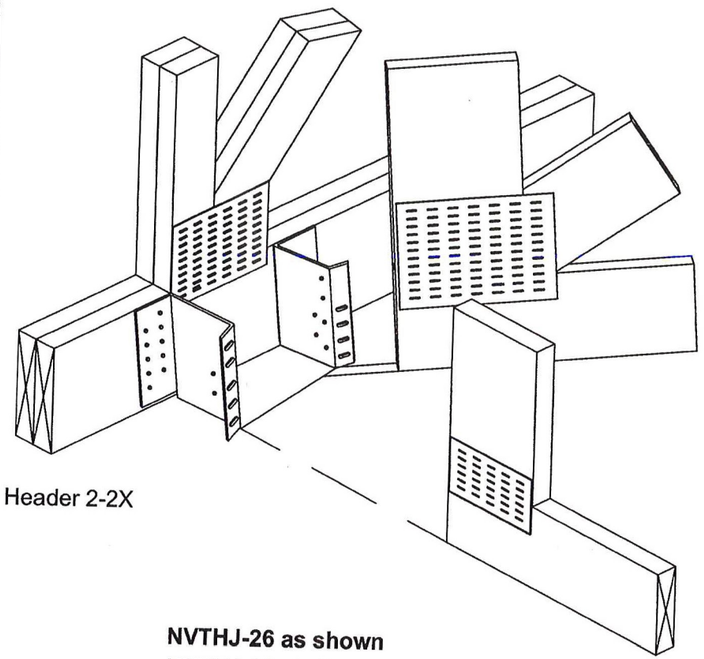

Header 2-2X

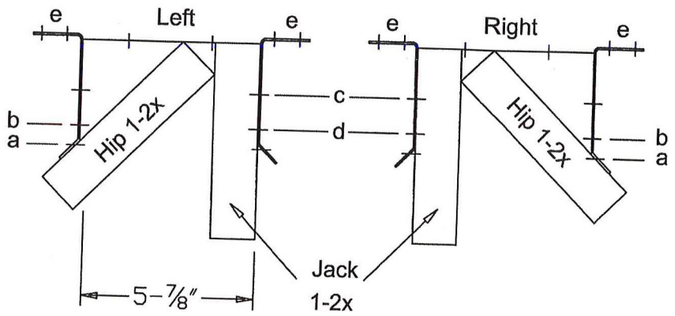

NVTHJ-26 as shown
NVTHJ-28 similar

U.S. Patent No. 4,964,253

Product Code	Allowable Loads (lbs) S. Pine	Nail Schedule						
	Uplift Loads	Header Nails 16d (e)	Hip Nail 10d			Jack Nail 10d		
			a	b	total	c	d	total
NVTHJ26	1478	16	4	3	7	2	3	5
NVTHJ28	1931	20	5	4	9	2	3	5

Note: For 1-2x members
10dx1½" nails can be used

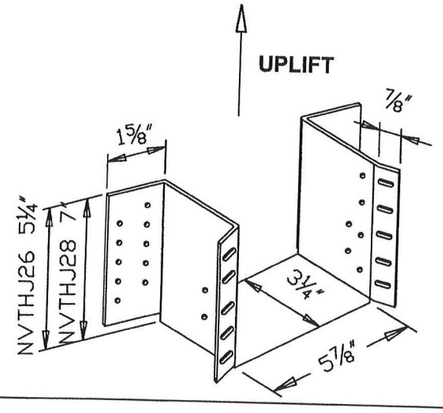

NVTHJ-28 as shown
NVTHJ-26 similar

PRODUCT REVISED
as complying with the Florida Building Code
NOA-No. 20-0901.05
Expiration Date 05/22/2023
By
Miami-Dade Product Control

20G Stud Plate Ties

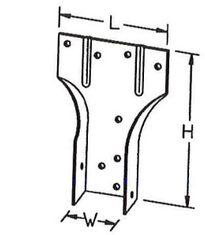

IKE-1
(ISOMETRIC)

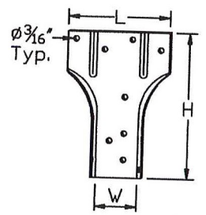

IKE-1

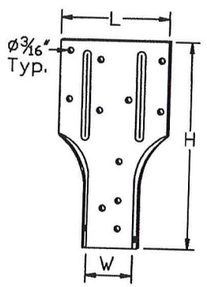

IKE-2

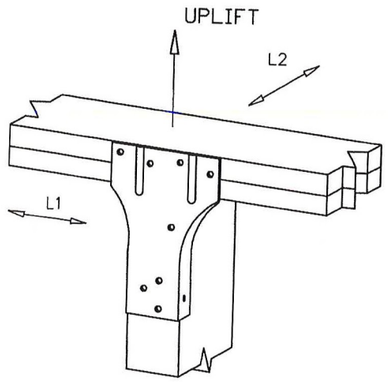

TYPICAL IKE1
INSTALATION

Product Code	Dimensions (inches)			Fasteners		Allowable Loads (lbs)		
	W	H	L	Stud	Plate	Uplift	L1	L2
IKE 1	1½	5	3½	6-10d	4-10d	787	337	337
IKE 2	1½	6⅝	3½	6-10d	7-10d	932	451	318

VIPIN N. TOLAT, PE (CIVIL)
FL. REG. # 12847
15123 LANTERN CREEK LANE
HOUSTON, TX 77068

8/21/2020

Nu-Vue Industries, Inc.
1053-1059 East 29 Street
Hialeah, Florida 33013
(305) 694-0397
Fax: (305) 694-0398

TRUSS AND TOP PLATE ANCHORS

DWG #:	Sheet:	Date:	Revisions:
NU-1	3 of 4	August 18, 2020	

18 Gauge NVTT Sanibel Truss Strap

Product Code	Dimensions (inches)				Fasteners Schedule			Allowable Loads (lbs)	
	W	B	H	L	Truss	Top Plates	Hollow Concrete Masonry	Uplift	L1
NVTT-1	1 9/16	1 3/4	14	13	2-10dx1½"	6-10d	-----	968	543
NVTT-2	1 9/16	1 3/4	14	13	2-10dx1½"	-----	6-¼"Øx1 ½" Tapcons	1584	465

1. 1-10dx1½" nail is placed on each side of the Truss and 3-10dnails in each leg are placed in two top plates.

2. 3-¼"dia. x 1½" long, 1¼" embedment tapcons are placed in each leg and into the hollow concrete masonry. Maintain 2½" edge distance from top of the block and spacing of 3" between the tapcons.

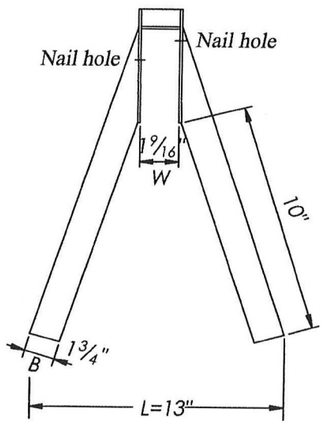

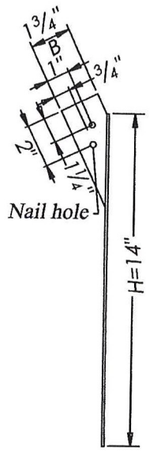

NVTT 1 and 2

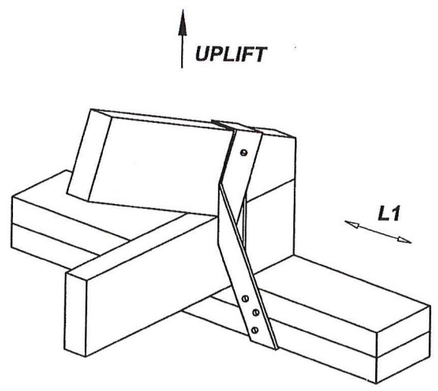

NVTT-1 As Shown
NVTT-2 Similar except concrete masonry with tapcon anchors instead of Wood Plates and nails.

18 Gauge NVHC 37 5WAY Grip Clip (520)

Product Code	Description	Nail Schedule		Allowable Design Loads (lbs)		
		Header or Plate	Joist or Stud	Uplift	L1	L2
NVHC 37	5 Way Clip	16-8d or 16-10d	12-8d or 12-10d	702	560	637

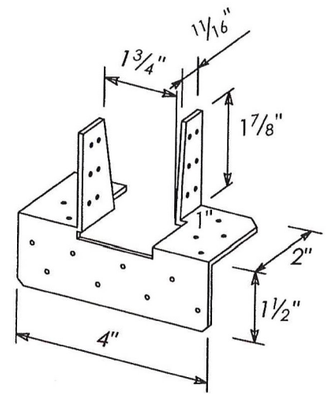

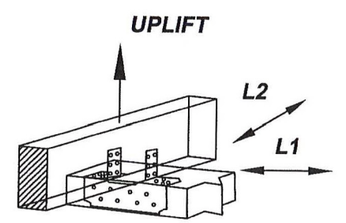

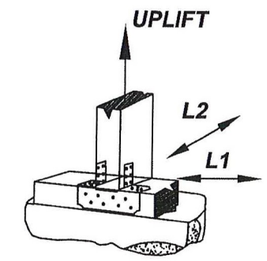

PRODUCT REVISED
as complying with the Florida Building Code
NOA-No. 20-0901.05
Expiration Date 05/22/2023
By
Miami-Dade Product Control

VIPIN N. TOLAT, PE (CIVIL)
FL. REG. # 12847
15123 LANTERN CREEK LANE
HOUSTON, TX 77068

8/21/2020

Nu-Vue Industries, Inc.
1053-1059 East 29 Street
Hialeah, Florida 33013
(305) 694-0397
Fax: (305) 694-0398

TRUSS AND TOP PLATE ANCHORS

DWG #:	Sheet:	Date:	Revisions:
NU-1	4 of 4	August 18, 2020	

OFFICE COPY
CITY OF MIAMI SPRINGS

CITY OF MIAMI SPRINGS
BUILDING DEPARTMENT
DEC 10 2021
RECEIVED

TABLE 1

Truss Anchors NVTA and Riveted Truss Anchors with Seat NVTAS

H Length (in)	Product Code		Gauge seat	Gauge strap
16	NVTA–16	NVTAS 212	20	14
18	NVTA–18	NVTAS 214	20	14
20	NVTA–20	NVTAS 216	20	14
22	NVTA–22	NVTAS 218	20	14
24	NVTA–24	NVTAS 220	20	14
26	NVTA–26	NVTAS 222	20	14
28	NVTA–28	NVTAS 224	20	14
30	NVTA–30	NVTAS 226	20	14
36	NVTA–36	NVTAS 232	20	14
48	NVTA–48	NVTAS 244	20	14

No. of Fasteners each strap 10d	Maximum Allowable Load (lbs)			
	Uplift Single Strap	Uplift Double Straps	L1 Single & Double Straps	L2 Single & Double Straps
5	757	1514	250	500
6	805	1610	250	500
7	854	1708	250	500
8	902	*1804	250	500
9	951	*1902	250	500
10	999	*1998	250	500
11	1048	*2096	250	500
12	1096	*2192	250	500
13	1145	*2290	250	500
14	1193	*2290	250	500

*Note: For 8 or more nails per strap, use double truss for double straps.

PRODUCT REVISED
as complying with the Florida Building Code
NOA-No. 20-0519.03
Expiration Date 07/30/2025
By
Miami-Dade Product Control

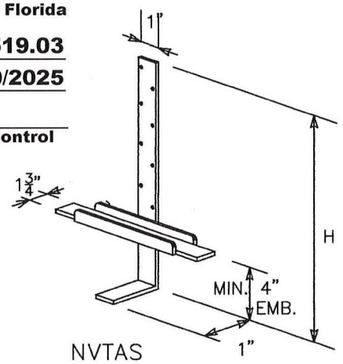

NVTAS

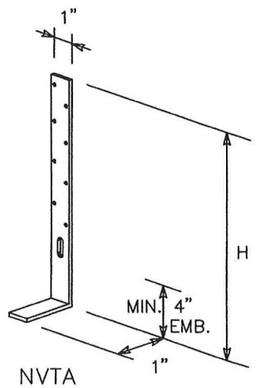

NVTA

TABLE 2

Truss Anchors NVTA and Riveted Truss Anchors with Seat NVTAS

H Length (in)	Product Code		Gauge seat	Gauge strap
16	NVTA–16	NVTAS 212	20	14
18	NVTA–18	NVTAS 214	20	14
20	NVTA–20	NVTAS 216	20	14
22	NVTA–22	NVTAS 218	20	14
24	NVTA–24	NVTAS 220	20	14
26	NVTA–26	NVTAS 222	20	14
28	NVTA–28	NVTAS 224	20	14
30	NVTA–30	NVTAS 226	20	14
36	NVTA–36	NVTAS 232	20	14
48	NVTA–48	NVTAS 244	20	14

No. of Fasteners each strap 10d x 1.5"	Maximum Allowable Load (lbs)			
	Uplift Single Strap	Uplift Double Straps	L1 Single & Double Straps	L2 Single & Double Straps
5	1032	2236	250	500
6	1127	2254	385	565
7	1136	2272	520	630
8	1144	*2288	520	630
9	1153	*2306	520	630
10	1161	*2322	520	630
11	1170	*2340	520	630
12	1178	*2356	520	630
13	1187	*2374	520	630

*Note: For 8 or more nails per strap, use double truss for double straps.

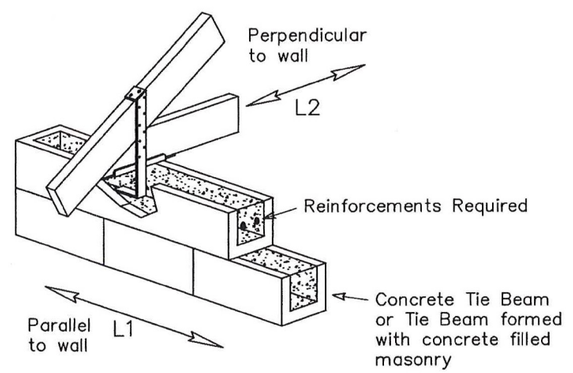

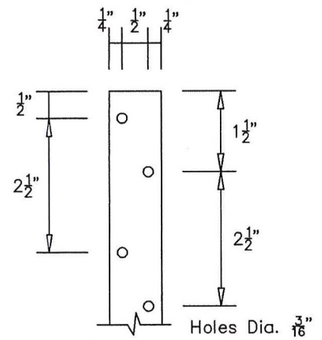

NVTA, NVTAS

General Notes:

1. Steel shall conform to ASTM A653, SS grade 33, min. yield 33 ksi, min. tensile strength 45 ksi and min. galvanized coating of G 60 per ASTM A653.

2. Allowable loads and fasteners are based on NDS 2015.

3. Design loads are for S. Pine, specific gravity 0.55. Design loads for other species shall be adjusted per NDS 2015.

4. Allowable uplift loads have been adjusted for load duration factor CD of 1.6. Allowable gravity loads have been adjusted for CD values of 1.0, per NDS 2015. Design loads do not include 33% increase for steel and concrete.

5. Concrete in Tie beams shall be min. of 2500 psi. Concrete Masonry, Grout and mortar in concrete masonry shall be min. of 1500 psi. Concrete masonry shall comply with ASTM C90.

6. Combined load of Uplift, L1 and L2 shall satisfy the following equation.

$$\frac{\text{Actual Uplift}}{\text{Allowable Uplift}} + \frac{\text{Actual L1}}{\text{Allowable L1}} + \frac{\text{Actual L2}}{\text{Allowable L2}} <= 1.0$$

7. Allowable loads are based on 1½" thick wood members unless otherwise noted.

8. All designs Conform to FBC 2017. ASTM D1761 and ASTM D7147.

VIPIN N. TOLAT, PE (CIVIL)
FL. REG. # 12847
15123 LANTERN CREEK LANE
HOUSTON, TX 77068

5/7/2020

Nu-Vue Industries, Inc.
1053–1059 East 29 Street
Hialeah, Florida 33013
PHONE: (305) 694–0397
FAX: (305) 694–0398

NVTA AND NVTAS TRUSS ANCHORS

DWG #:	Sheet:	Date:	
NU-2	1 of 4	May 5, 2020	

CITY OF MIAMI SPRINGS
BUILDING DEPARTMENT

DEC 10 2021

RECEIVED

APPLICATION FOR TREE PLANTING/REMOVAL
PUBLIC RIGHT-OF-WAY/PRIVATE PROPERTY

Applicant: Jovany Jimenez Date: 12/10/21

Address: 200 Esplanade Dr Miami Springs, FL 33166 Phone: 7865877510

Relationship to property owner of above address: Owner

Tree or trees requested to be planted or removed (Circle One)

Size of tree(s): Diameter _____ Approximate Height: 8Ft+

Any overhead wires or utilities: _____ Yes ___✓___ No

DRAW A LOCATION SKETCH

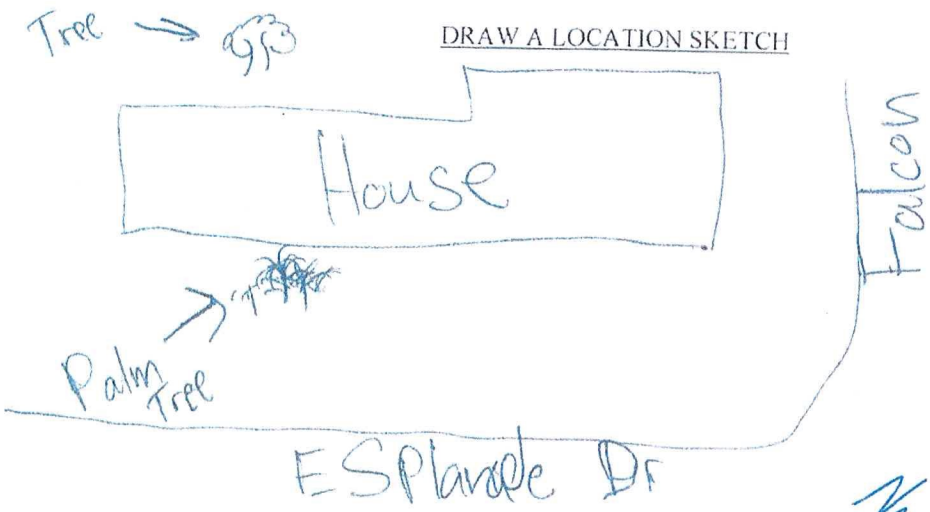

Arborist Notes:
Guava Fruit Tree
48 sqr feet Canopy
4" DBH
APPROVED
No mitigation required

Areca Palm
8-10' tall multi stem
APPROVED
No mitigation required

Kevin O'steen, Certified Arborist # FL9737A

Approval by: Garaboa Date: 2-7-22

City of Miami Springs
Public Services Department
Tel: (305) 805-5170

Approval by this office does not constitute the issuance of a permit. All must be obtained at the Building & Code Compliance Department, at 201 Westward Drive, Miami Springs, FL 33166. Phone (305) 805-5030 Fax: (305) 805-5036

O:\B & Z Forms\APPLICATION FOR TREE PLANTING-REMOVAL.doc

CITY OF MIAMI SPRINGS
BUILDING AND CODE COMPLIANCE

PUBLIC SERVICES PERMIT APPROVAL
ROUTING LOG

PERMIT NUMBER N/A

ADDRESS/LOCATION OF WORK 200 Esplanade Dr.

TYPE OF WORK Tree

CONTRACTOR HIO

RECEIVED AT PUBLIC SERVICES-

[signature] 12/13/21

SIGNATURE DATE

R. Rovo 2/10/22

RETURNED TO BUILDING DEPARTMENT-

SIGNATURE DATE

L Gordon 2-7-22

DISTRIBUTION=
WHITE COPY-RETAINED BY BUILDING DEPT AT DELIVERY
YELLOW COPY-RETAINED BY PUBLIC SERVICES ON RETURN
PINK COPY-RETAINED BY BUILDING DEPARTMENT ON RETURN

O:\B & Z Forms\Public Works Approval LOG.doc

CITY OF MIAMI SPRINGS
BUILDING DEPARTMENT

DEC 10 2021

RECEIVED

APPLICATION FOR TREE PLANTING/REMOVAL
PUBLIC RIGHT-OF-WAY/PRIVATE PROPERTY

Applicant: Jovany Jimenez Date: 12/10/21

Address: 200 Esplanade Dr Miami Spring, FL 33166 Phone: 7865877510

Relationship to property owner of above address: Owner

Tree or trees requested to be planted or removed (Circle One) _____

Size of tree(s): Diameter _____ Approximate Height: 8Ft

Any overhead wires or utilities: _____ Yes ___✓___ No

DRAW A LOCATION SKETCH

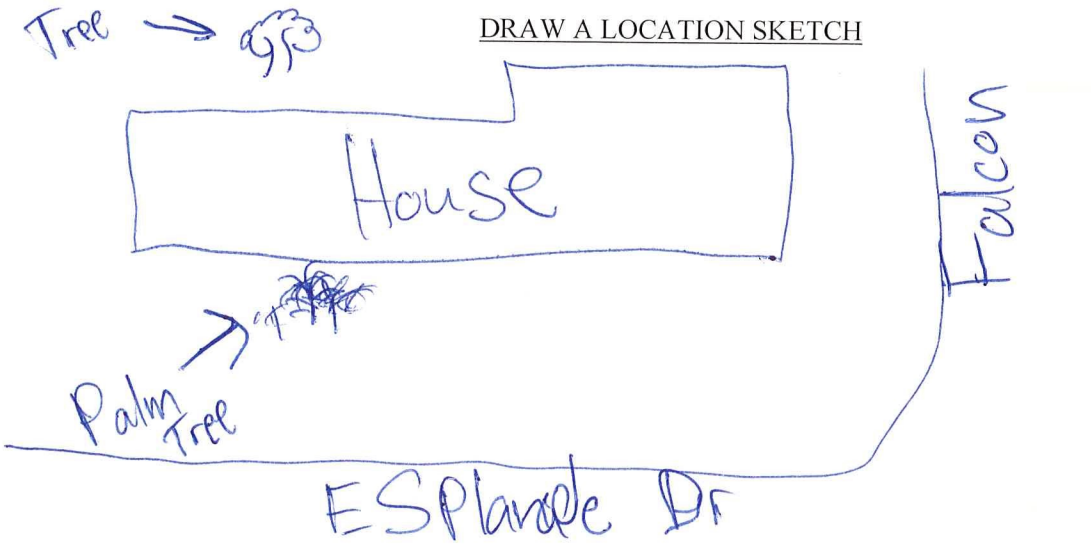

Approval by: L Garabo Date: 2-7-22

City of Miami Springs
Public Services Department
Tel: (305) 805-5170

Approval by this office does not constitute the issuance of a permit. All must be obtained at the Building & Code Compliance Department, at 201 Westward Drive, Miami Springs, FL 33166. Phone (305) 805-5030 Fax: (305) 805-5036

O:\B & Z Forms\APPLICATION FOR TREE PLANTING-REMOVAL.doc

	DATE	TOTAL LAND	TOTAL IMPROV.	GRAND TOTAL	AUTHORITY
ORIGINAL VALUATION	1-1-58	2,500	7,400	9,900	Town Council
1ST ADJUSTMENT	1-1-59	3,850	7,400	11,250	LVR
2ND ADJUSTMENT	1-1-60	3,850	6,700	10,550	Dep-700
3RD ADJUSTMENT					
4TH ADJUSTMENT					
5TH ADJUSTMENT					

PLOT-SIZE 100 ~~150~~ x 150

AREA □

ZONING	MAXIMUM BLDG. HEIGHT	MINIMUM LAND AREA	MINIMUM BLDG. AREA
~~R-1-AA~~ R1C	35'	~~6000~~ 5,500	900

UTILITIES	AVAIL.	CONN.	UTILITIES	AVAIL.	CONN.
WATER		X	SEWERAGE		
ELECTRICITY		X			

STREET IMPROVEMENTS				FIRE PROTECTION	
PAVING		CURBS		CITY	X
WALKS		ALLEYS	X	VOLUNTEER	

BUILDING SPECIFICATIONS

AGE (YRS.)		ROOF		INTERIOR WALLS		SOLAR HEATER			
STORIES	1	BUILT-UP	X	FURRED		SEPTIC TANK	X		
ROOMS	5	ROLLED		PLASTER		MASONRY			
BEDROOMS	2	SLATE SURFACE SHINGLE		PAINTED		DRIVE			
CONSTRUCTION		CLAY TILE				WALLS			
C.B.S.	X	CEMENT TILE		HEAT		WALKS	X		
FRAME				FIRE PLACE					
FRAME STUCCO		WINDOW SASH				GARAGE			
ASB. SIDING		STEEL CASEMENT		BATHS		1 CAR			
PORCH	#1 #2	WOOD	X	BATH ROOMS	1 2 3	2 CAR			
SCREEN		DOUBLE HUNG		NO. FIXTURES	3	DETACHED			
TILE FLOOR		AWNING TYPE STEEL		TILE FLOOR	X	ATTACHED			
CEMENT FL.	X	AWNING TYPE WOOD		CEMENT FL.		CONSTN.			
WOOD FL.				WOOD FLOOR		PORTE COCHERE	X		

CALCULATIONS

ITEM	BLDG. A	BLDG. B	BLDG. C	BLDG. D
SQUARE FT.	1010	200		
RATE	7.50	4.00		
COST	7575.	800		
PHYS. % DEPRECIATION				
FUNC. % DEPRECIATION				
TOTAL DEPRECIATION				
BUILDING VALUE	7575.			
LAND VALUE				
TOTAL VALUE				

Bldg B Storage Room BP 1955-17
BP#308-remodel & encl.openings - 5/20/71

No 2723

	DATE	TOTAL LAND	TOTAL IMPROV.	GRAND TOTAL	AUTHORITY
ORIGINAL VALUATION	1-1-49	2275.	7575.	9850.	WCW
1ST ADJUSTMENT	2-27-50	2275.	7348.	9623.	Town Council
2ND ADJUSTMENT	1-1-53	1525	7348	8873	Sold Lot 3 12-55
3RD ADJUSTMENT	1-1-55	2500.	6600.	9100.	Land +975. Dep. -748.
4TH ADJUSTMENT	1-1-56	2,500	7,400	9,900	BP 1955-17 CO 11/23/55
5TH ADJUSTMENT	1-1-58	3,850.	7,400.	11,250.	LVR

LEGAL DESCRIPTION

Cinema Park Block 58 S/E Lot 1; Lot 2;

18-19-53-41

PB 17-2

1- 2- 3-4-5- 8- 9- 0- 1.

OWNER	200 Esplanade Drive OWNER	LEGAL
James Clark Eyres, 851 Hunting Lodge Dr., Local 4/19/47 200 Esplanade	Thomas W. Jackson 200 N. Esplanade Dr. WD 7/11/83 11846-1826 79,500	RIC REF 150.43
Margaret Windsor Eyres Sgle 200 Esplanade Dr Local 10 27 61 st 20	Irving Zahn, 78 Canal Street WD-12236-868--8-3-84	Southeasterly 1/2 of Lots 1 and 2, Block 58, Cinema Park Addition to Country Club Estates, according to Plat Book 17, page 2, Public Records of Dade County.
Joseph Patrick Bussey & w. Dorothy 533 Mokena Dr. QCD 2/76 (Lives here)	Jack V. Parrish and W Betty Jo and John A. Parrish, single Mail: 265 Navarre Drive WD 2-11-85 12431-3285 68,500	
THOMAS WAYNE JACKSON & W PATRICE BUSSEY JACKSON 200 N. Esplanade Dr. QCD 11-14-77 24,000	ALAN & w/MARTHA DIAZ W/D 12/5/86 - $60,000. #13114Pg.2660, #86R434114	

3118 16 159

200 Esplanade Drive

OWNER	OWNER	LEGAL
~~James-Clark-Eyres,~~ ~~851-Hunting-Lodge-Dr~~ ~~Local--4/19/47~~ ~~200-Esplanade~~	~~Irv-Zahn-to:~~ JACK V. PARRISH & W/BETTY JO & JOHN A. PARRISH, single WD 2-11-85 12431-2385 68,500	
~~Margaret-Windsor-Eyres,-sgle~~ ~~200-Esplanade-Drive---Local~~ ~~10-27-61--st-.20~~		
~~Joseph-Patrick-Bussey-&-W/Dorothy~~ ~~533-Mokena-Drive QCD-2/76~~		
~~THOMAS-WAYNE-JACKSON-&-w~~ ~~PATRICE-BUSSEY-JACKSON~~ 200 N. Esplanade Drive ~~QCD-11-14-77----24,000~~		

DUPLICATE

DUPLICATE

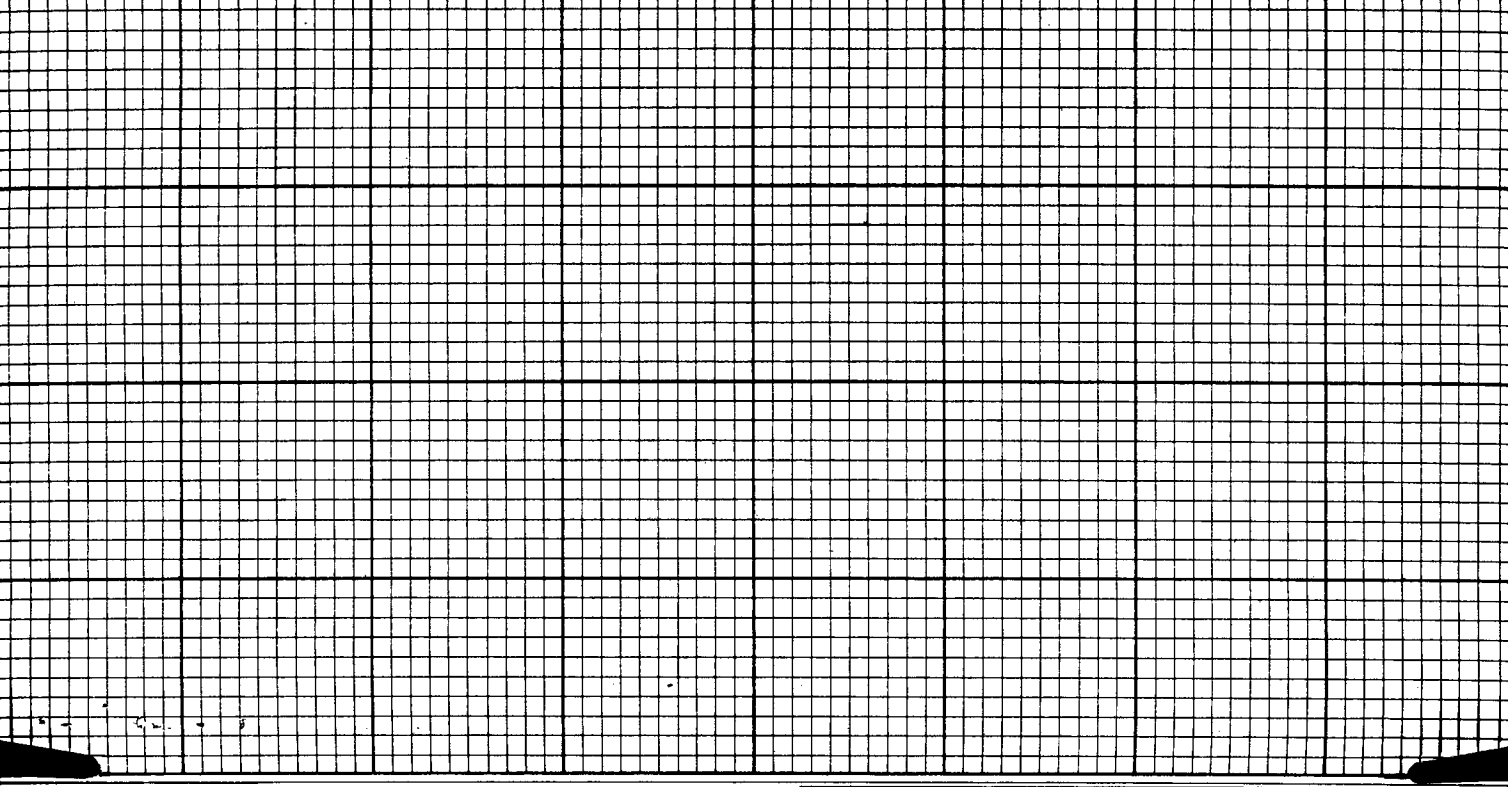

PLOT SIZE	AREA ☐	ZONING	MAXIMUM BLDG. HEIGHT	MINIMUM LAND AREA	MINIMUM BLDG. AREA

UTILITIES	AVAIL.	CONN.	UTILITIES	AVAIL.	CONN.	STREET IMPROVEMENTS				FIRE PROTECTION	
WATER			SEWERAGE			PAVING		CURBS		CITY	
ELECTRICITY						WALKS		ALLEYS		VOLUNTEER	

BUILDING SPECIFICATIONS													
AGE (YRS.)			ROOF		INTERIOR WALLS		SOLAR HEATER						
STORIES			BUILT-UP		FURRED		SEPTIC TANK						
ROOMS			ROLLED		PLASTER		MASONRY						
BEDROOMS			SLATE SURFACE SHINGLE		PAINTED		DRIVE						
CONSTRUCTION			CLAY TILE				WALLS						
C. B. S.			CEMENT TILE		HEAT		WALKS						
FRAME					FIRE PLACE								
FRAME STUCCO			WINDOW SASH				GARAGE						
ASB. SIDING			STEEL CASEMENT		BATHS		1 CAR						
PORCH	#1	#2	WOOD		BATH ROOMS	1 2 3	2 CAR						
SCREEN			DOUBLE HUNG		No. FIXTURES		DETACHED						
TILE FLOOR			AWNING TYPE STEEL		TILE FLOOR		ATTACHED						
CEMENT FL			AWNING TYPE WOOD		CEMENT FL.		CONSTN.						
WOOD FL					WOOD FLOOR		PORTE COCHERE						

CALCULATIONS				
ITEM	BLDG. A	BLDG. B	BLDG. C	BLDG. D
SQUARE FT.				
RATE				
COST				
PHYS. % DEPRECIATION				
FUNC. % DEPRECIATION				
TOTAL DEPRECIATION				
BUILDING VALUE				
LAND VALUE				
TOTAL VALUE				

	DATE	TOTAL LAND	TOTAL IMPROV.	GRAND TOTAL	AUTHORITY
ORIGINAL VALUATION					
1ST ADJUSTMENT					
2ND ADJUSTMENT					
3RD ADJUSTMENT					
4TH ADJUSTMENT					
5TH ADJUSTMENT					

LEGAL DESCRIPTION

Southeasterly 1/2 of Lots 1 & 2, Block 58, Cinema Park Addition to Country Club Est. 17-2

OFFICE COPY
CITY OF MIAMI SPRINGS

CITY OF MIAMI SPRINGS
CITY PLANNER
201 WESTWARD DRIVE
MIAMI SPRINGS, FL 33166
(305)805-5034

CITY OF MIAMI SPRINGS
BUILDING DEPARTMENT
DEC 16 2021
RECEIVED

PROJECT DATA

To be submitted with new construction & additions

	ZONING DISTRICT		
		REQUIRED/ ALLOWED	PROVIDED
	NET LOT AREA	7,500	7,500
	PARKING SPACES	3	4
YARDS	FRONT	30'	15.09' exist. condition approved
	SIDE (CORNER)	15'	35.36' exist. condition approved
	SIDE (INTERIOR)	7.50'	7.67' new condition
	SIDE (INTERIOR)		
AREA CALCULATIONS	REAR	25.0'	13.86' approved to match exist. condition
	MINIMUM FLOOR AREA	1,200	2,374
	HEIGHT	25' to ridge	17'-6" proposed
	FRONT YARD PERVIOUS	1,350 60%	2,606 85%
	MAXIMUM LOT COVERAGE	40%	32%
	MINIMUM LANDSCAPED AREA	30%	57%

C:\Users\Alfonso\AppData\Local\Microsoft\Windows\INetCache\Content.Outlook\GTK249R4\PROJECT DATA.doc

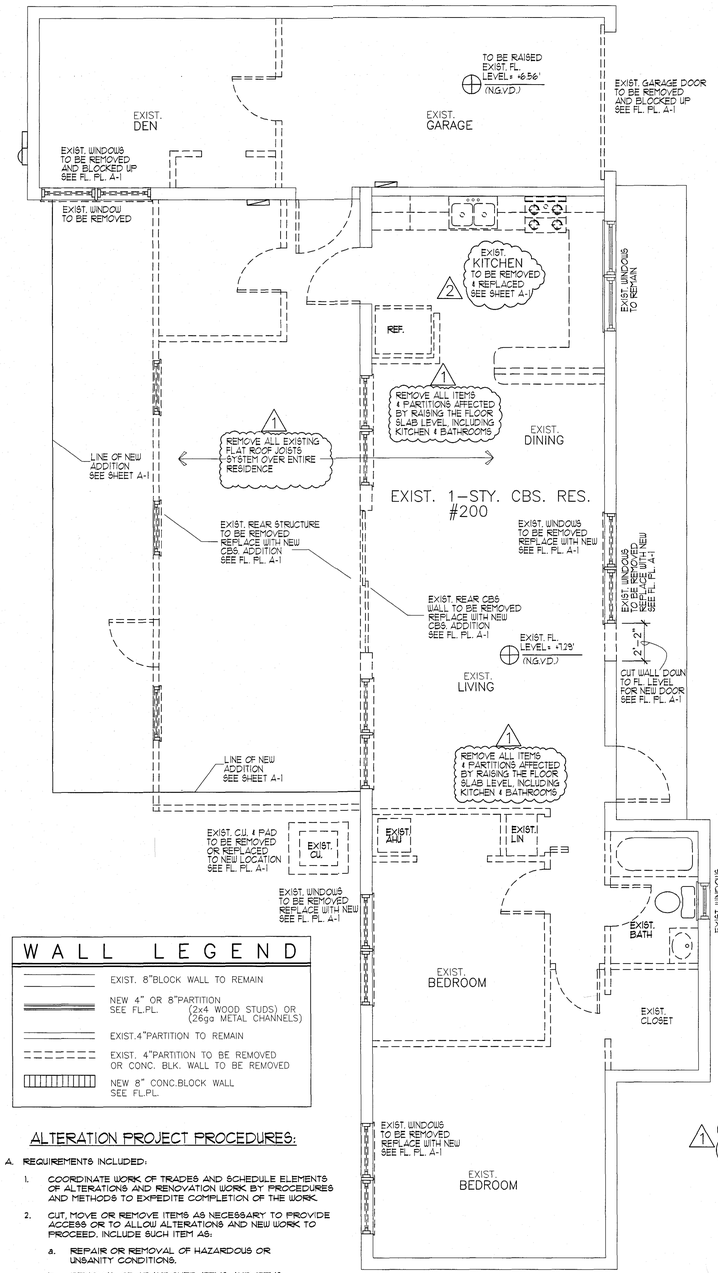

WALL LEGEND

- EXIST. 8"BLOCK WALL TO REMAIN
- NEW 4" OR 8"PARTITION SEE FL.PL. (2x4 WOOD STUDS) OR (26ga METAL CHANNELS)
- EXIST.4"PARTITION TO REMAIN
- EXIST. 4"PARTITION TO BE REMOVED OR CONC. BLK. WALL TO BE REMOVED
- NEW 8" CONC.BLOCK WALL SEE FL.PL.

ALTERATION PROJECT PROCEDURES:

A. REQUIREMENTS INCLUDED:

1. COORDINATE WORK OF TRADES AND SCHEDULE ELEMENTS OF ALTERATIONS AND RENOVATION WORK BY PROCEDURES AND METHODS TO EXPEDITE COMPLETION OF THE WORK.
2. CUT, MOVE OR REMOVE ITEMS AS NECESSARY TO PROVIDE ACCESS OR TO ALLOW ALTERATIONS AND NEW WORK TO PROCEED. INCLUDE SUCH ITEM AS:
   a. REPAIR OR REMOVAL OF HAZARDOUS OR UNSANITY CONDITIONS.
   b. REMOVAL OF ABANDONED ITEMS AND ITEMS SERVING NO USEFUL PURPOSE, SUCH AS ABANDONED PIPING, CONDUIT, AND WIRING.
   c. REMOVAL OF UNSUITABLE OR EXTRAGENEOUS MATERIALS NOT MARKED FOR SALVAGE, SUCH AS ABANDONED EQUIPMENT AND DEBRIS INCLUDING ROTTED WOOD, RUSTED METALS AND DETERIORATED CONCRETE.
3. ALTERATIONS AND CONNECTIONS OF NEW CONTRUCTION TO EXISTING CONSTRUCTION OCCUR AT DUST SENSITIVE AREAS, EXECUTE ALL MEASURES TO COMPLETELY CONTROL AND SEPARATE DUST FROM EXISTING AREA AND EQUIPMENT.

EXIST./DEMO FLOOR PLAN

SCALE: 1/4"=1'-0"

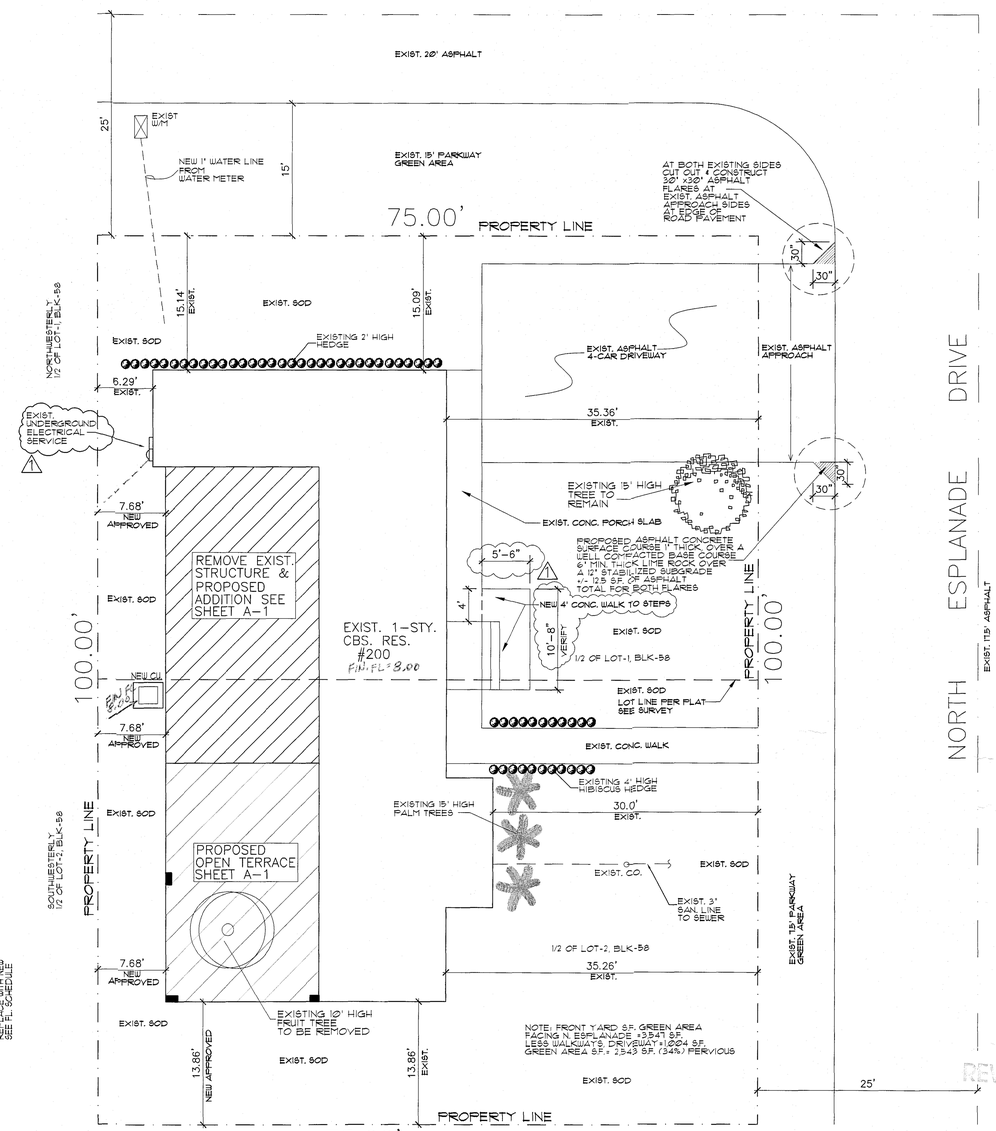

SITE PLAN

SCALE: 1/8"=1'-0"
SEE SURVEY

SCOPE OF WORK:

NOTE: THIS IS A EXISTING RESIDENCE WITH MOST OF IT BEING REMODELED.
ALSO THERE IS A PROPOSED ADDITION BEING ADDED TO THE REAR OF RESIDENCE.
REMOVE AND REPLACE ALL WINDOWS AND EXTERIOR DOORS AT EXISTING RESIDENCE.
REMOVE ALL EXIST. FLAT ROOF AND PROVIDE NEW TRUSS SYSTEM OVER ENTIRE STRUCTURE.
REMOVE ALL EXIST. PARTITIONS AND KITCHEN CABINETS (TO REINSTALL LATER).
REMOVE ALL EXIST. BATHROOMS DUE TO RAISING OF THE FLOOR SLAB. SEE D-1 & A-2
PROVIDE NEW ROOF FINISHES AT EXISTING AND NEW ADDITION UNDER A SEPARATE PERMIT.
ADDITION CONSISTS OF 2 NEW BEDROOMS & 2 NEW BATHROOMS WITH DEN.
REMOVE GARAGE DOOR AND BLOCK UP WITH WINDOW AT FRONT AS SHOWN ON A-1.
RELOCATE CERTAIN WINDOW & DOOR OPENINGS AND BLOCK UP OTHER WALL AREAS.
SEE FLOOR PLAN AND SECTIONS FOR NEW & EXIST. BLOCK WALLS & NEW TIE BEAMS.
PROVIDE NEW CONCRETE STARTER COLUMNS & CONC. BEAMS AS SHOWN ON PLAN.
WITH NEW WINDOWS/DOORS, & VERTICAL REBAR TIE COLUMNS AT NEW WALLS.
SEE PLAN FOR ALL NEW AND EXISTING CONDITIONS BEING ALTERED AND OR MODIFIED.
SEE MECHANICAL WORK AS PART OF THIS PERMIT.
SEE ELECTRICAL WORK AS PART OF THIS PERMIT.
SEE PLUMBING WORK AS PART OF THIS PERMIT.

LEGAL DESCRIPTION: FOLIO#=05-3118-016-1590

SELY 1/2 LOTS 1 & 2, BLOCK 58, OF "CINEMA PARK-COUNTRY CLUB ESTS ADDITION" PLAT BOOK 17, PAGE 2 AS RECORDED 13114-2660 1. OF THE PUBLIC RECORDS OF MIAMI DADE COUNTY.

NOTE: THE ARCHITECT OR ENGINEER OF RECORD IS NOT RESPONSIBLE FOR ANY UNEXPECTED OR UNFORESEEN OR HIDDEN EXISTING CONDITIONS THAT HAVE NOTHING TO DO WITH THE PROPOSED WORK. THESE ISSUES IF ANY WILL BE ADDRESSED SEPARATELY, AND ADDED TO THE SCOPE OF WORK.

NOTE: TRADE CONTRACTOR IS RESPONSIBLE FOR ANY COST EFFECTIVE REVISIONS TO PLANS IF ORIGINAL DESIGN OF APPROVED PLANS ARE NOT FOLLOWED. A DIFFERENT METHOD IN DESIGN MAY BE USED AFTER CONSTRUCTION & PERMIT DOCUMENTS ARE ACTIVE IN FIELD, BUT AGAIN TRADE CONTRACTOR WILL BE RESPONSIBLE FOR ANY INCURRED COSTS DUE TO ANY REQUIRED REVISION WORK ON THE ORIGINAL APPROVED PLANS. ANY AND ALL CHANGES TO PLANS MUST BE APPROVED BY THE ENGINEER OR ARCHITECT OF RECORD & BUILDING DEPT. AND WILL BE BILLED ACCORDINGLY.

CALL 48 HOURS BEFORE YOU DIG IN FLORIDA
IT'S THE LAW
1-800-432-4770
SUNSHINE STATE ONE CALL OF FLORIDA, INC.

1

FLOOD CRITERIA INFO:
FLOOD ZONE= AH
BASE FLOOD ELEVATION 7.0'
NEW FLOOR SLAB ELEVATION 8.0' (N.G.V.D.)
SEE ELEVATION CERTIFICATE ATTACHED.

ENVIRONMENTAL RESOURCES & LANDSCAPING TREES NOTES:

NOTE: (1) FRUIT TREE WILL BE REMOVED DURING CONSTRUCTION.
NOTE: FOR ANYOTHER NEARBY TREES THAT MAY BE AFFECTED BY THE NEW CONSTRUCTION PROTECT EXIST. TREES. PROVIDE 10'-12' BARRIES AROUND TREES TO REMAIN WITH A TEMPORARY PLYWD. PARTITIONS OR SAFETY MESH. ALL DAMAGED PLANT MATERIAL INCLUDING SOD MUST BE RESTORED PRIOR TO FINAL BUILDING INSPECTION.
ALL OTHER EXISTING SHRUBS & HEDGES INCLUDING SOD TO REMAIN AS IS.

DESIGN CRITERIA

CODE EDITION: 2020-7th EDITION FLORIDA BUILDING CODE AS PER CODE REFERENCE STANDARDS CHAPTER 35
CODE REFERENCES: ASCE/SEI 7-16, ACI 318-14, NDS 2018 AWC AF & PA-92, ASTM A615, ASTM D-698, & AITC, AISI S100-16,
MECHANICAL 2020-7th EDITION FLORIDA BUILDING CODE
ELECTRICAL 2020-7th EDITION FLORIDA BUILDING CODE
PLUMBING 2020-7th EDITION FLORIDA BUILDING CODE
NATIONAL ELECTRIC CODE (NEC 2017)
EXISTING BUILDINGS 2020-7th EDITION FLORIDA BUILDING CODE
FLORIDA FIRE PREVENTION CODE 2020 7th Edition
FLORIDA ACCESSIBILITY CODE 2020 7th Edition
ASCE/SEI 7-16 EXPOSURE CONDITION INDICATED=C
CONSTRUCTION TYPE VB UNPROTECTED
OCCUPANCY CLASSIFICATION R-3
ALTERATION LEVEL-3

I CERTIFY THIS IS BEING DESIGNED TO WITHSTAND 175 MPH WIND SPEED ACCORDING TO ASCE 7-16 AS REQUIRED BY THE FLORIDA BUILDING CODE REVISED 2020 EDITION 7th EDITION

ZONING LEGEND

ZONING CLASSIFICATION	SINGLE FAMILY RESIDENTIAL (R-1C) DISTRICT
TOTAL GROSS LOT AREA:	12,500 SQFT.
NET LOT AREA :	12,500 SQFT.
LOT COVERAGE REQUIRED:	40%
LOT COVERAGE PROVIDED	32%
other conc. impervious areas 850 SF. GREEN AREA TO REMAIN 4,275 SF.	
EXIST. BUILD'G. FT. PRINT	1,718 SQFT.
NEW ADDITIONAL S.F.	+ 189 SQFT.
EXIST. BEING REMOVED/REMODELED	- 404 SQFT.
TOTAL NEW UNDER A/C AREA S.F.	1,507 SQFT. A/C
NEW OPEN TERRACE S.F.	+ 467 SQFT.
(NEW TOTAL FT. PRINT S.F.)=	2,314 SQFT.

3 PARKING SPACES REQUIRED.
EXIST. CONC. DRIVEWAY FOR 4 CARS AT FRONT YARD.

SETBACKS REQUIRED:	
FRONT	30.00'
INTERIOR SIDE	7.50'
STREET SIDE	15.00'
REAR	25.00'
BETWEEN BUILDINGS	20.00'

SETBACKS PROVIDED:	
FRONT	15.09' EXIST. CONDITION APPV'D.
INTERIOR SIDE	7.61' PROPOSED
STREET SIDE	39.36' EXIST. CONDITION APPV'D.
REAR	13.86' MATCH EXIST. CONDITION APPV'D.
BETWEEN BUILDINGS	N/A

INDEX OF DRAWINGS

SP-1/D-1 SITE PLAN AND EXIST. & DEMO FLOOR PLAN
A-1 PROPOSED FLOOR PLANS, SCHED. & DETS.
A-2 FOUNDATIONS & STRUCTURAL SECTIONS/DETAILS
A-3 WINDOW SCHEDULES & DETAILS
A-4 PROPOSED ELEVATIONS
A-5 ROOF PLAN & STRUCTURAL DETAILS
A-6 ROOF DIAGRAM & OTHER DETAILS, NOTES.
M-1 MECHANICAL SHEET AND SCHEDULES, DETAILS
E-1 ELECTRICAL SHEET AND SCHEDULES, RISERS
P-1 PLUMBING SHEET AND DETAILS.
P-2 PLUMBING SHEET AND DETAILS.

CITY OF MIAMI SPRINGS
APPROVED
FOR PERMIT OF
INSPECTOR
INSPECTOR
DATE

OFFICE COPY
CITY OF MIAMI SPRINGS

SEPARATE PERMIT REQUIRED FOR ROOFING, PLUMBING ELECTRICAL, MECHANICAL, SHUTTERS, WINDOWS, DOORS AND DRIVEWAYS

NO.	DATE
1	2-22-22 REVISED TO RAISE EXIST. FL. LEVEL TO 8.0
2	
3	
4	

DESIG. DRWN. CHKD. APPV. DATE

PROJECT NAME: ADDITION TO RESIDENCE FOR:
OWNER/PH: AMBAR PREVAL 786-587-7391
ADDRESS: 200 N. ESPLANADE DRIVE MIAMI SPRINGS, FLORIDA 33166
PROJECT ADD: SAME

Guillermo Ramon Gonzalez
9000 SW. 168th Avenue Miami Florida 33196 Ph:305-484-8171
Registered Architect #13960 Ph:786-237-5154 (assistant)

STATE OF FLORIDA
GUILLERMO RAMON GONZALEZ
AR0013960
REGISTERED ARCHITECT
Guillermo Ramon Gonzalez
R.A. 13960
STATE OF FLORIDA

101521

SP-1
D-1

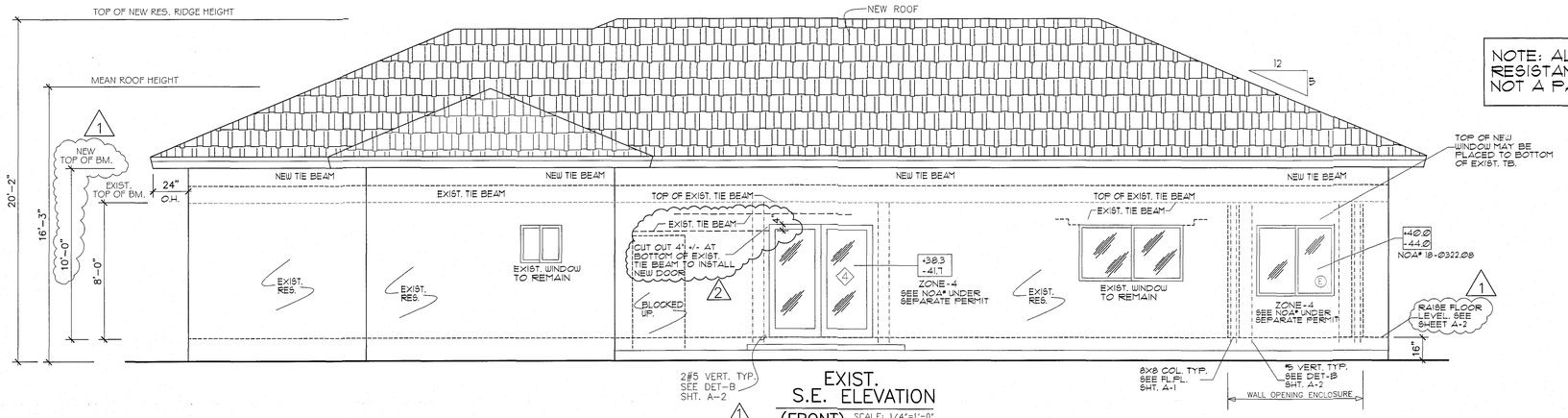

EXIST. S.E. ELEVATION (FRONT)

SCALE: 1/4"=1'-0"

NOTE: ALL NEW WINDOWS & EXTERIOR DOORS TO BE IMPACT RESISTANT SEE NOAS. ALSO TO BE UNDER A SEPARATE SUB PERMIT. NOT A PART OF THIS PERMIT.

NOTE: ALL EXTERIOR WALL COVERING AND ROOF ASSEMBLIES AND ROOF TOP STRUCTURES SHALL COMPLY WITH HI-VELOCITY HURRICANE ZONE AS PER CHAPTER 44 , R4401.1 & R4402.1 OF THE F.B.C. RESIDENTIAL 2020 - 7TH EDITION.

NOTE:
ALL WINDOWS, DOORS AND/OR ANY OTHER COMPONENTS INSTALLATION SHALL BE IN ACCORDANCE W/ MANUFACTURER'S SPECIFICATIONS SET FORTH IN THE APPROVED PRODUCT CONTROL APPROVAL.

NOTE: OWNER/G.C. TO VERIFY ALL NEW & WINDOWS/DOOR SIZES TO BE REMOVED/REPLACED

WINDOW SCHEDULE

NOTE: ALL WINDOW SIZES TO BE VERYFIED IN FIELD & WITH WINDOW MANUFG. PRIOR TO COMPONENT FABRICATION & INSTALLATION.

MARK	OPENING WIDTH	OPENING HEIGTH	CODE	TYPE	AREA (SF)	MATERIAL	REMARKS ALL NEW WINDOWS TO BE IMPACT RESISTANT
(A)	37	38 3/8"	3030	HORZ. ROLLER	9.60	ALUM./GLASS	SEE N.O.A. SEPARATE PERMIT
(B)	37	26	3020	HORZ. ROLLER	6.20	ALUM./GLASS	SEE N.O.A. TEMP. CAT-2 FROSTED
(C)	74-1/8	50 5/8	6030	HORZ. ROLLER	20.20	ALUM./GLASS	SEE N.O.A. EGRESS
(D)	53 1/8	50 5/8	6040	HORZ. ROLLER	18.75	ALUM./GLASS	SEE N.O.A. EGRESS
(E)							

NOTE: ALL NEW WINDOWS & EXTERIOR DOOR TO BE IMPACT RESISTANT SEE NOAS.

WINDOW U VALUE 1.20
WINDOW shgc U VALUE 0.45

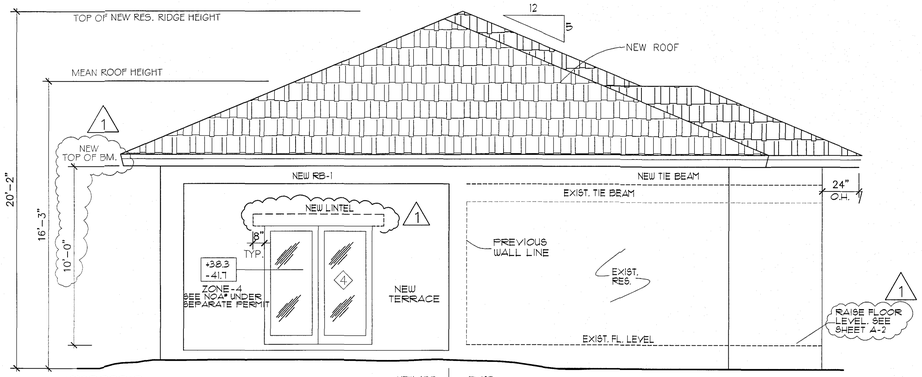

S.W. ELEVATION (SIDE)

SCALE: 1/4"=1'-0"

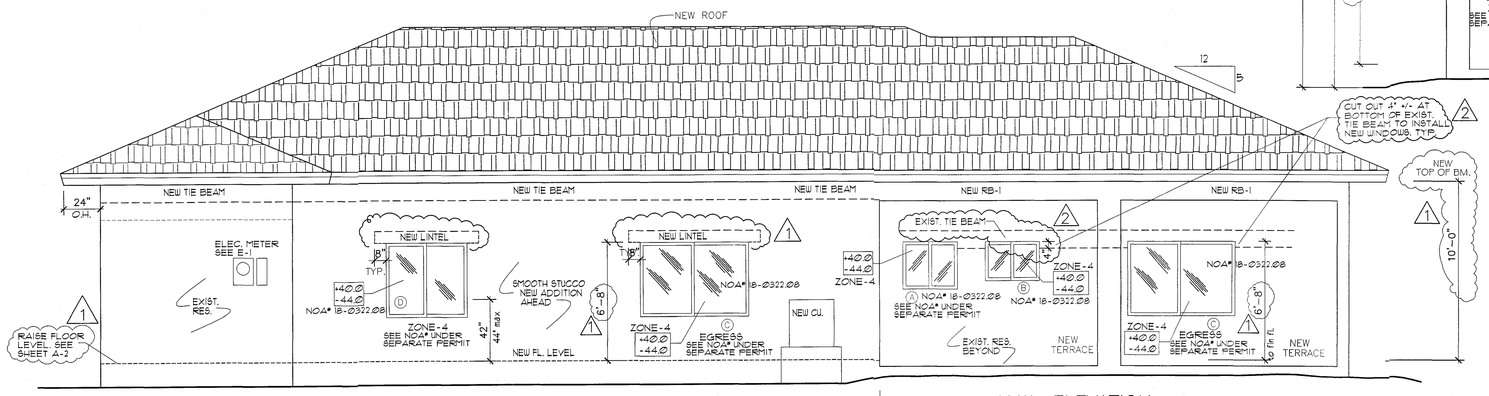

N.W. ELEVATION (REAR)

SCALE: 1/4"=1'-0"

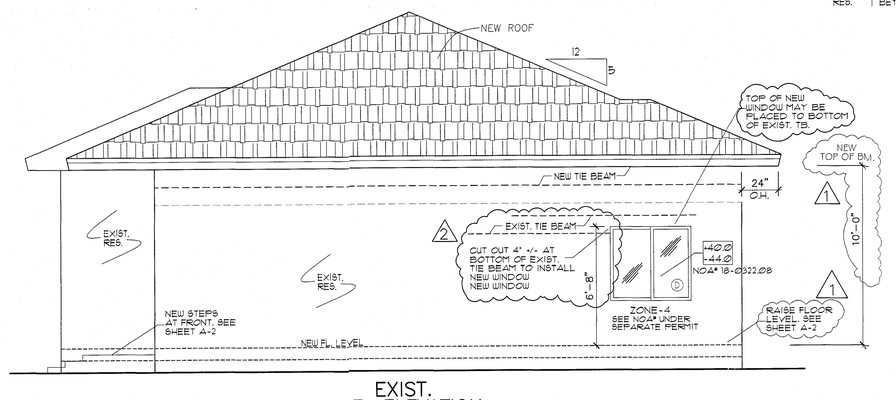

EXIST. N.E. ELEVATION (SIDE)

SCALE: 1/4"=1'-0"

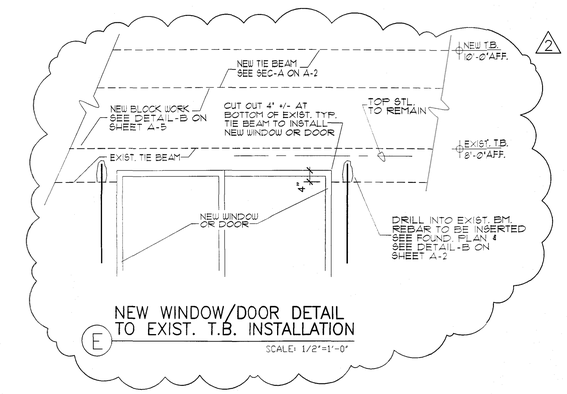

NEW WINDOW/DOOR DETAIL TO EXIST. T.B. INSTALLATION

SCALE: 1/2"=1'-0"

8" PRECAST U-LINTELS *STANDARD LENGTHS*

OVERALL LENGTH	TOP STEEL	BOTTOM STEEL
3'-0"	2 -7/32" wire	2 -#3 rebar
3'-4"	2 -7/32" wire	2 -#3 rebar
3'-6"	2 -7/32" wire	2 -#3 rebar
4'-0"	2 -7/32" wire	2 -#3 rebar
4'-6"	2 -7/32" wire	2 -#3 rebar
4'-8"	2 -7/32" wire	2 -#3 rebar
5'-4"	2 -7/32" wire	2 -#3 rebar
5'-10"	2 -7/32" wire	2 -#3 rebar
6'-0"	2 -7/32" wire	2 -#4 rebar
6'-6"	2 -7/32" wire	2 -#4 rebar
6'-8"	2 -7/32" wire	2 -#4 rebar
7'-4"	2 -7/32" wire	2 -#4 rebar
7'-6"	2 -7/32" wire	2 -#4 rebar
8'-0"	2 -#3 rebar	2 -#4 rebar
8'-8"	2 -#3 rebar	2 -#4 rebar
9'-4"	2 -#3 rebar	2 -#4 rebar
10'-0"	2 -#3 rebar	2 -#4 rebar
10'-6"	2 -#3 rebar	2 -#4 rebar
10'-8"	2 -#3 rebar	2 -#5 rebar
11'-4"	2 -#3 rebar	2 -#5 rebar
12'-0"	2 -#3 rebar	2 -#5 rebar
13'-4"	2 -#3 rebar	2 -#5 rebar
14'-0"	2 -#3 rebar	2 -#5 rebar

Additional lengths available by special order

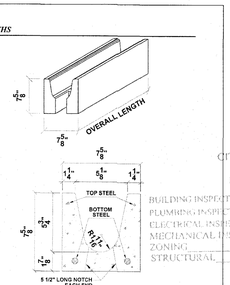

Rebar: ASTM A615 Grade 60
Wire: ASTM A510
Concrete Strength: 4000 psi
Average Self Weight: 33 plf
Finish: Grey Block

8" PRESTRESSED U-LINTELS *STANDARD LENGTHS*

OVERALL LENGTH	TOP STEEL	BOTTOM STEEL
14'-8"	NONE	2 -7/16 strand
15'-4"	NONE	2 -7/16 strand
17'-4"	NONE	2 -7/16 strand
19'-4"	2 -7/32" wire	2 -7/16 strand
21'-4"	2 -7/32" wire	2 -7/16 strand 2 - #4 rebar
22'-0"	2 -7/32" wire	2 -7/16 strand 2 - #4 rebar
24'-0"	2 -7/32" wire	2 -7/16 strand 2 - #4 rebar

Additional lengths available by special order

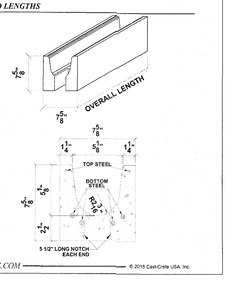

Rebar: ASTM A615 Grade 60
Wire: ASTM A510
Strand: ASTM A416 Grade 270
Concrete Strength: 6000 psi
Synthetic Fibers: 2.5 lbs/yd
Average Self Weight: 37 plf
Finish: Grey Smooth Form

WWW.CASTCRETE.COM
© 2015 Cast-Crete USA, Inc.

CITY OF MIAMI SPRINGS BUILDING DEPARTMENT
APR 12 2022
RECEIVED

CITY OF MIAMI SPRINGS
APPROVED
FOR PERMIT ONLY

BUILDING INSPECTOR _____
PLUMBING INSPECTOR _____
ELECTRICAL INSPECTOR _____
MECHANICAL INSPECTOR _____
ZONING _____
STRUCTURAL _____

REVISIONS

NO.	DATE
1	1-14-22 REVISED TO RAISE EXIST. FL. LEVEL TO 8.0
2	3-22-22 REVISED TO SHOW NEW DETAILS.
3	.
4	.

DESG	DRWN	CHKD	APRV	DATE
.	.	.	.	.

PROJECT NAME: ADDITION TO RESIDENCE FOR:
OWNER/PH: AMBAR PREVAL 786-587-7391
ADDRESS:200 N. ESPLANADE DRIVE MIAMI SPRINGS, FLORIDA 33166
PROJECT ADD: SAME

Guillermo Ramon Gonzalez
9000 SW. 168th Avenue Miami Florida 33196 Ph:305-484-8171
Registered Architect #13960 Ph:786-237-5154 (assistant)

101521

A-4

STATE OF FLORIDA — GUILLERMO RAMON GONZALEZ — AR0013960 — REGISTERED ARCHITECT

Guillermo Ramon Gonzalez
R.A. 13960
STATE OF FLORIDA

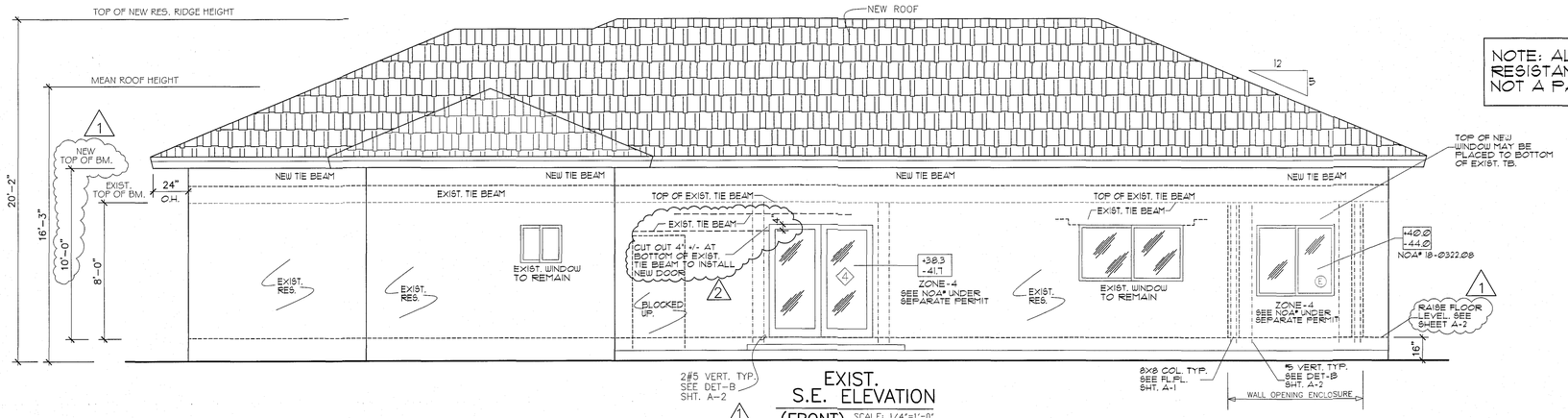

EXIST. S.E. ELEVATION (FRONT)

SCALE: 1/4"=1'-0"

NOTE: ALL NEW WINDOWS & EXTERIOR DOORS TO BE IMPACT RESISTANT SEE NOAS. ALSO TO BE UNDER A SEPARATE SUB PERMIT. NOT A PART OF THIS PERMIT.

NOTE: ALL EXTERIOR WALL COVERING AND ROOF ASSEMBLIES AND ROOF TOP STRUCTURES SHALL COMPLY WITH HI-VELOCITY HURRICANE ZONE AS PER CHAPTER 44 , R4401.1 & R4402.1 OF THE F.B.C. RESIDENTIAL 2020 - 7TH EDITION.

NOTE:
ALL WINDOWS, DOORS AND/OR ANY OTHER COMPONENTS INSTALLATION SHALL BE IN ACCORDANCE W/ MANUFACTURER'S SPECIFICATIONS SET FORTH IN THE APPROVED PRODUCT CONTROL APPROVAL.

NOTE: OWNER/G.C. TO VERIFY ALL NEW & WINDOWS/DOOR SIZES TO BE REMOVED/REPLACED

WINDOW SCHEDULE

NOTE: ALL WINDOW SIZES TO BE VERYFIED IN FIELD & WITH WINDOW MANUFG. PRIOR TO COMPONENT FABRICATION & INSTALLATION.

MARK	OPENING WIDTH	OPENING HEIGTH	CODE	TYPE	AREA (SF)	MATERIAL	REMARKS ALL NEW WINDOWS TO BE IMPACT RESISTANT
(A)	37	38 3/8"	3030	HORZ. ROLLER	9.60	ALUM./GLASS	SEE N.O.A. SEPARATE PERMIT
(B)	37	26	3020	HORZ. ROLLER	6.20	ALUM./GLASS	SEE N.O.A. TEMP. CAT-2 FROSTED
(C)	74-1/8	50 5/8	6030	HORZ. ROLLER	20.20	ALUM./GLASS	SEE N.O.A. EGRESS
(D)	53 1/8	50 5/8	6040	HORZ. ROLLER	18.75	ALUM./GLASS	SEE N.O.A. EGRESS
(E)							

NOTE: ALL NEW WINDOWS & EXTERIOR DOOR TO BE IMPACT RESISTANT SEE NOAS.

WINDOW U VALUE 1.20
WINDOW shgc U VALUE 0.45

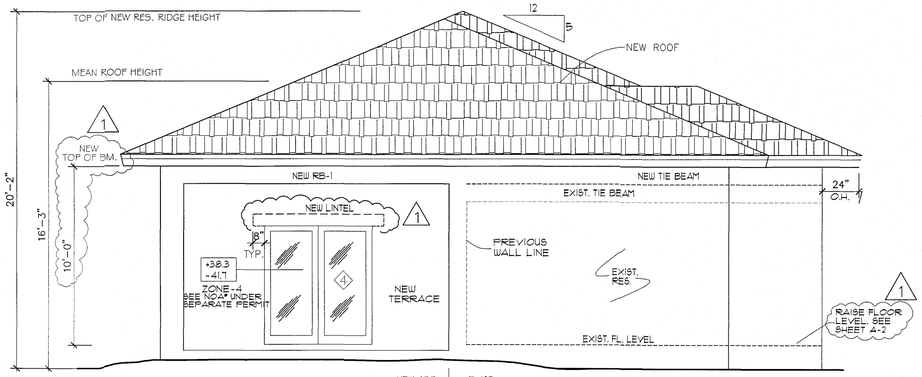

S.W. ELEVATION (SIDE)

SCALE: 1/4"=1'-0"

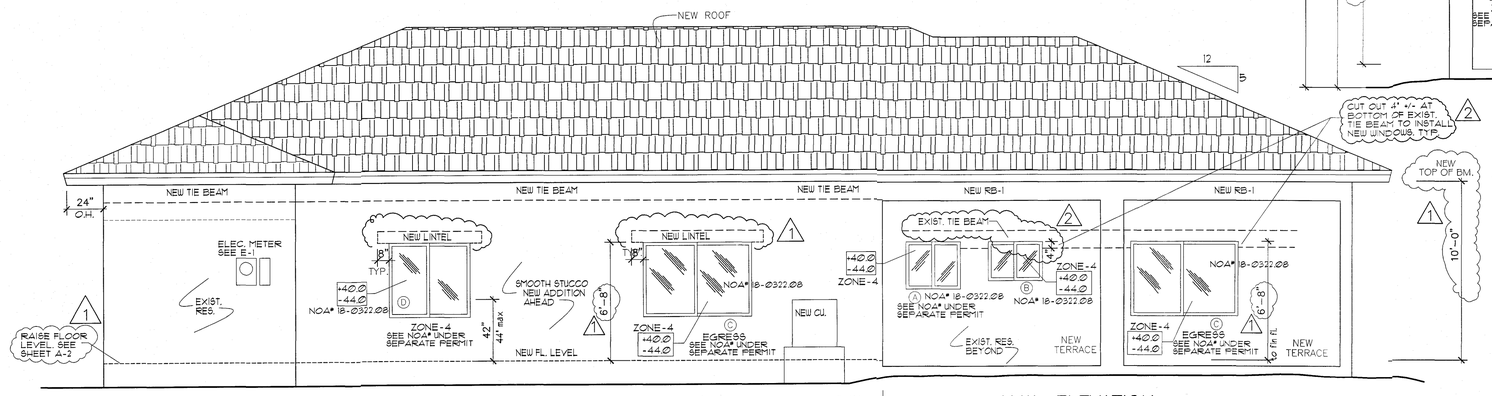

N.W. ELEVATION (REAR)

SCALE: 1/4"=1'-0"

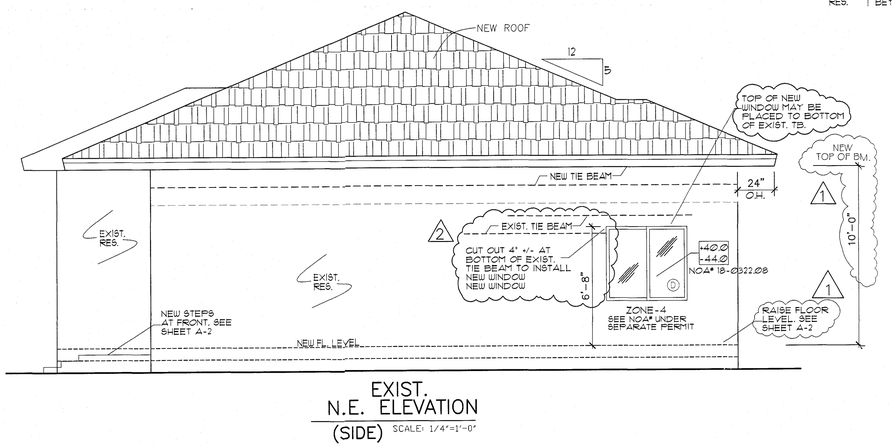

EXIST. N.E. ELEVATION (SIDE)

SCALE: 1/4"=1'-0"

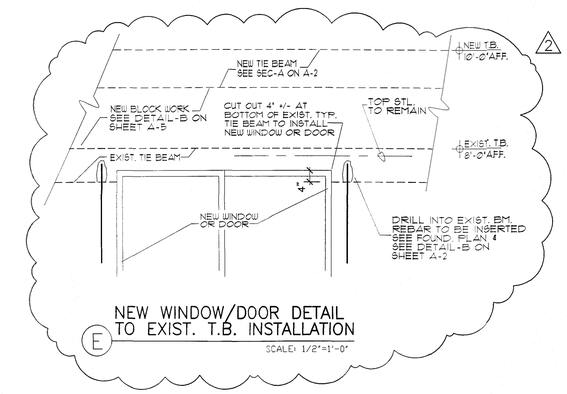

NEW WINDOW/DOOR DETAIL TO EXIST. T.B. INSTALLATION

SCALE: 1/2"=1'-0"

8" PRECAST U-LINTELS *STANDARD LENGTHS*

OVERALL LENGTH	TOP STEEL	BOTTOM STEEL
3'-0"	2 -7/32" wire	2 -#3 rebar
3'-4"	2 -7/32" wire	2 -#3 rebar
3'-6"	2 -7/32" wire	2 -#3 rebar
4'-0"	2 -7/32" wire	2 -#3 rebar
4'-6"	2 -7/32" wire	2 -#3 rebar
4'-8"	2 -7/32" wire	2 -#3 rebar
5'-4"	2 -7/32" wire	2 -#3 rebar
5'-10"	2 -7/32" wire	2 -#3 rebar
6'-0"	2 -7/32" wire	2 -#4 rebar
6'-6"	2 -7/32" wire	2 -#4 rebar
6'-8"	2 -7/32" wire	2 -#4 rebar
7'-4"	2 -7/32" wire	2 -#4 rebar
7'-6"	2 -7/32" wire	2 -#4 rebar
8'-0"	2 -#3 rebar	2 -#4 rebar
8'-8"	2 -#3 rebar	2 -#4 rebar
9'-4"	2 -#3 rebar	2 -#4 rebar
10'-0"	2 -#3 rebar	2 -#4 rebar
10'-6"	2 -#3 rebar	2 -#4 rebar
10'-8"	2 -#3 rebar	2 -#5 rebar
11'-4"	2 -#3 rebar	2 -#5 rebar
12'-0"	2 -#3 rebar	2 -#5 rebar
13'-4"	2 -#3 rebar	2 -#5 rebar
14'-0"	2 -#3 rebar	2 -#5 rebar

Additional lengths available by special order

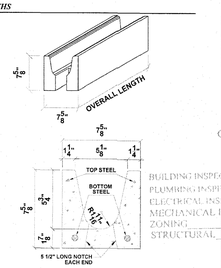

Rebar: ASTM A615 Grade 60
Wire: ASTM A510
Concrete Strength: 4000 psi
Average Self Weight: 33 plf
Finish: Grey Block

8" PRESTRESSED U-LINTELS *STANDARD LENGTHS*

OVERALL LENGTH	TOP STEEL	BOTTOM STEEL
14'-8"	NONE	2 -7/16 strand
15'-4"	NONE	2 -7/16 strand
17'-4"	NONE	2 -7/16 strand
19'-4"	2 -7/32" wire	2 -7/16 strand
21'-4"	2 -7/32" wire	2 -7/16 strand 2 - #4 rebar
22'-0"	2 -7/32" wire	2 -7/16 strand 2 - #4 rebar
24'-0"	2 -7/32" wire	2 -7/16 strand 2 - #4 rebar

Additional lengths available by special order

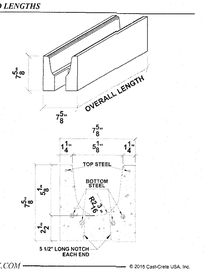

Rebar: ASTM A615 Grade 60
Wire: ASTM A510
Strand: ASTM A416 Grade 270
Concrete Strength: 6000 psi
Synthetic Fibers: 2.5 lbs/yd
Average Self Weight: 37 plf
Finish: Grey Smooth Form

WWW.CASTCRETE.COM
© 2015 Cast-Crete USA, Inc.

CITY OF MIAMI SPRINGS
BUILDING DEPARTMENT
APR 12 2022
RECEIVED

CITY OF MIAMI SPRINGS
APPROVED
FOR PERMIT ONLY
BUILDING INSPECTOR
PLUMBING INSPECTOR
ELECTRICAL INSPECTOR
MECHANICAL INSPECTOR
ZONING
STRUCTURAL

REVISED
REVISED
REVISED

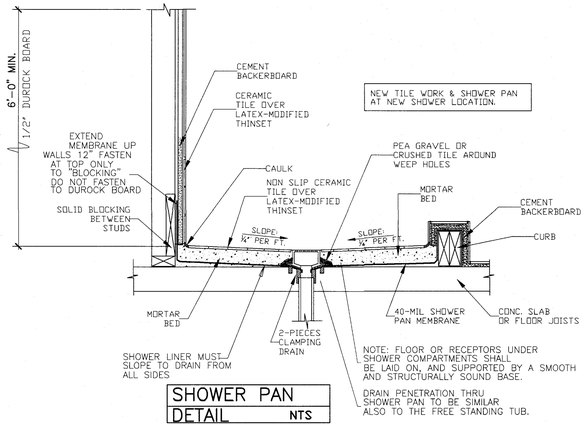

NEW TILE WORK & SHOWER PAN AT NEW SHOWER LOCATION.

SHOWER PAN DETAIL NTS

NOTE: TITAN N-180 (EXISTING TANK LESS W.H.)

LARGE Whole house capacity- 3bed/2bath
4 GPM
Thermostatically control temp on front cover
60% energy savings vs. conventional electric water heaters
99.5% efficient
10 year warranty on water carrying components- 1 year on rest of unit
Space saver
On demand water control- equals unit longevity and savings
For use with hard, soft, well or city water
Problem free installation
Most efficient and practical product of its kind on the market
Steel outer / copper-brass inner casing (no plastic or pvc parts)
UL approved #499
ANSI-Z 10.03 certified
Dimensions: 10" high x 7" wide x 2 3/4" deep
11.4KW- 54 amps- 1 double pole 60 amp breaker required. 1, 6/2 wire line
Dual heating chambers
Simple instructions for installation ease
Made in the USA

PLUMBING SCOPE OF WORK:

ALL NEW PLUMBING WORK IS AT BOTH NEW BATHROOMS.
PROVIDE 2-NEW BATHS, W/ VANITY & LAV. AND NEW FAUCET &
PROVIDE NEW TOILETS AT BOTH NEW BATHROOM AREA.
PROVIDE NEW SHOWER & SHOWER PAN AT BOTH NEW BATHS.
PROVIDE NEW 1" WATER SERVICE FROM METER.
EXIST. TANKLESS WATER HEATER TO REMAIN.
PROVIDE NEW WATER & DRAIN LINES & WATER PIPING &
PROVIDE NEW WATER DISTRIBUTION LINES AS SHOWN.
EXIST. FRONT BATHROOM TO REMAIN.
NEW W & D. LAUNDRY ROOM LOCATION SEE PLAN.
EXISTING MAIN DRAIN LINE AS SHOWN TO REMAIN AS IS.
CONNECT NEW 3" SAN. LINE FROM NEW ADDITION TO EXIST.
MAIN HOUSE DRAIN LINE AT FRONT OF RESIDENCE. SEE SP-1 & P-1.

BATHTUBS AND SHOWER FLOORS AND WALLS ABOVE BATHTUBS WITH INSTALLED SHOWER HEADS AND IN SHOWER COMPARTMENTS SHALL BE FINISHED WITH A NONABSORBENT SURFACE. SUCH WALL SURFACES SHALL EXTEND TO A HEIGHT OF NOT LESS THAN 6' ABOVE THE FLOOR. AS PER FBC R307.
FIBER CEMENT, FIBER-MAT REINFORCED CEMENT GYPSUM BACKERS INSTALLED IN ACCORDANCE WITH MANUFACTURER RECOMMENDATIONS SHALL BE USED AS BACKERS FOR ALL WALL TILE IN TUB AND SHOWER AREA SAND WALL PANELS IN SHOWER AREAS AS PER FBC R702.4.2

PLUMBING NOTES:

1. ALL PLUMBING SHALL BE DONE IN ACCORDANCE WITH (PLUMBING) OF THE "F.B.C." 2020-7th EDITION AND ALL OTHER PERTAINING CODES AND ORDINANCES HAVING JURISDICTION.
2. PLUMBING CONTRACTOR SHALL PAY ALL FEES, INSPECTIONS AND CONNECTION CHARGES REQUIRED.
3. PLUMBING CONTRACTOR SHALL FURNISH AND INSTALL AIR CONDITIONING CONDENSE DRAIN AND TRAP. SEE AIR CONDITIONING PLANS FOR LOCATION OF UNITS AND DRAINS.
4. PLUMBING CONTRACTOR SHALL VERIFY ALL SPACE CONDITIONS AND DIMENSIONS AT JOB SITE PRIOR TO FABRICATION AND INSTALLATION OF MATERIALS AND EQUIPMENT.
5. COORDINATE WORK WITH OTHER TRADES.
6. SUBMIT SHOP DRAWINGS TO ENGINEER FOR APPROVAL OF ALL EQUIPMENT, MATERIALS AND LAYOUTS PRIOR TO INSTALLATION.
7. FURNISH AND INSTALL BATHROOM FIXTURES AS SPECIFIED (BY ENGINEER).
8. PLUMBING CONTRACTOR SHALL GUARANTEE ALL WORK FREE OF DEFECTS IN MATERIAL AND WORKMANSHIP FOR A PERIOD OF ONE YEAR FROM DATE OF ACCEPTANCE.
9. EACH BATHROOM GROUP SHALL BE PROVIDED WITH AIR CHAMBERS AS PER FLO-RIDA BUILDING CODE.
10. PROVIDE SHUTOFF VALVE FOR EACH FIXTURE.
11. WHEREVER DISSIMILAR METALS ARE TO BE JOINED, A DI- ELECTRIC FITTING SHALL BE PROVIDED TO CONNECT BOTH TYPES OF PIPES.
12. PIPES.
    A. COLD WATER PIPING DOWNSTREAM OF WATER METER SHALL BE TYPE "L" COPPER BELOW GROUND AND TYPE "M" COPPER ABOVE GROUND.
    B. SANITARY WASTE AND VENT 4" AND SMALLER SHALL BE PVC SOIL PIPE.
    C. CONDENSE DRAIN PIPE SHALL BE SCHEDULE 40, PVC PIPE AND FITTINGS.
    D. STORM LINES SHALL BE SAME AS FOR SANITARY SYSTEM.
13. THERE SHALL BE NO JOINTS IN WATER LINES BELOW SLAB.
14. PROVIDE ANTI-SCALD DIVERTS @ ALL SHOWERS AND TUBS.
15. WATER SERVICE LINE TO STRUCTURE MAY BE CPVC MATERIAL UP TO CONTROL VALVE. AFTER THAT TO WATER HEATER SOURCE AND OTHER DISTRIBUTION LINE TO BE COPPER. AS PER ASTM D 2846; ASTM F 441; ASTM F 442; CSA B 137.6
16. FBC P2903.2 MAXIMUM FLOW OF WATER CONPSUMPTION. AS PER MIAMI DADE COUNTY ORDINANCE SEC. 8-31 PLUMBING FIXTURES SHALL MEET THE LOCAL WATER FLOW RESTRICTIONS ADOPTED BY MIAMI DADE COUNTYWATER AND SEWER (WATER CLOSET 1.28gpm, LAV. 1.5gpm, SHOWER HEADS 1.5gpm AND KITCHEN FAUCETS 1.5 gpm.
17. FBC P2903.5 WATER HAMMER. THE FLOW VELOCITY OF THE WATER DISTRIBUTIONSYSTEM SHALL BE CONTROLLED TO REDUCE THE POSSIBILTY OF WATER HAMMER. A WATER HAMMER ARRESTOR SHALL BE INSTALLED WHERE QUICK-CLOSING VALVES ARE USED. WATER HAMMER ARRESTORS SHALL BE INSTALLED IN ACCORDANCE WITH MANUFACTURERS SPECIFICATIONS. WATER HAMMER ARRESTORS SHALL CONFORM TO ASSE 1010

TABLE 604.4
MAXIMUM FLOW RATES AND CONSUMPTION FOR PLUMBING FIXTURES, FIXTURE FITTINGS AND APPLIANCES

PLUMBING FIXTURE OR FIXTURE FITTING	MAXIMUM FLOW RATE (b)
Lavatory, private	1.5 gpm at 60 psi
Lavatory, public, (metering)	0.25 gallon per metering cycle
Shower head (a)	1.5 gpm at 60 psi
Sink faucet	1.5 gpm at 60 psi
Urinal	>>Waterless or 0.5 gallon flushing cycle
Water Closet	1.28 gallons per flushing cycle
Dishwasher (residential)	6.5 gallons per cycle or less (Energy Star/Water Sense Certified) ©
Dishwasher (commercial)	Less than 1.2 gallons per rack for fill and dump machines and less Than 0.9 gallons per rack for all other types of machines.
Dishwasher (under the counter machines)	1.0 gallon or less per rack for high-temperature machines and 1.7 gallons per rack for low-temperature machines
Washing machine	Water factor of 8 or lower (Energy Star / Water Sense Certified) ©

For SI:
1 gallon = 3.785 L
1 gallon per minute = 3.785 L/m
1 pound per square inch = 6.895 kPa.
(a) A hand-held shower spray is a shower head.
(b) Consumption tolerances shall be determined from referenced standards.
(c) Water factor in gallons per cycle per cubic foot.

(B)

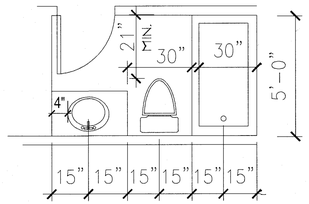

FOR REFERENCE: MIN. FIXTURE CLEARANCE DETAIL
N.T.S.

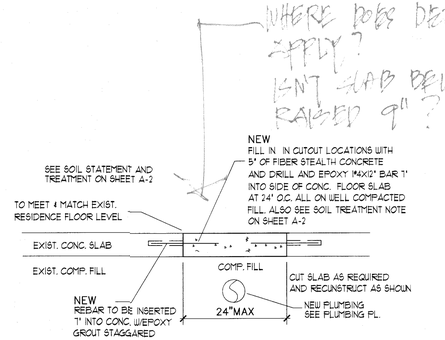

Ⓑ SLAB CONNECTION DETAIL SCALE:1/2"=1'-0"

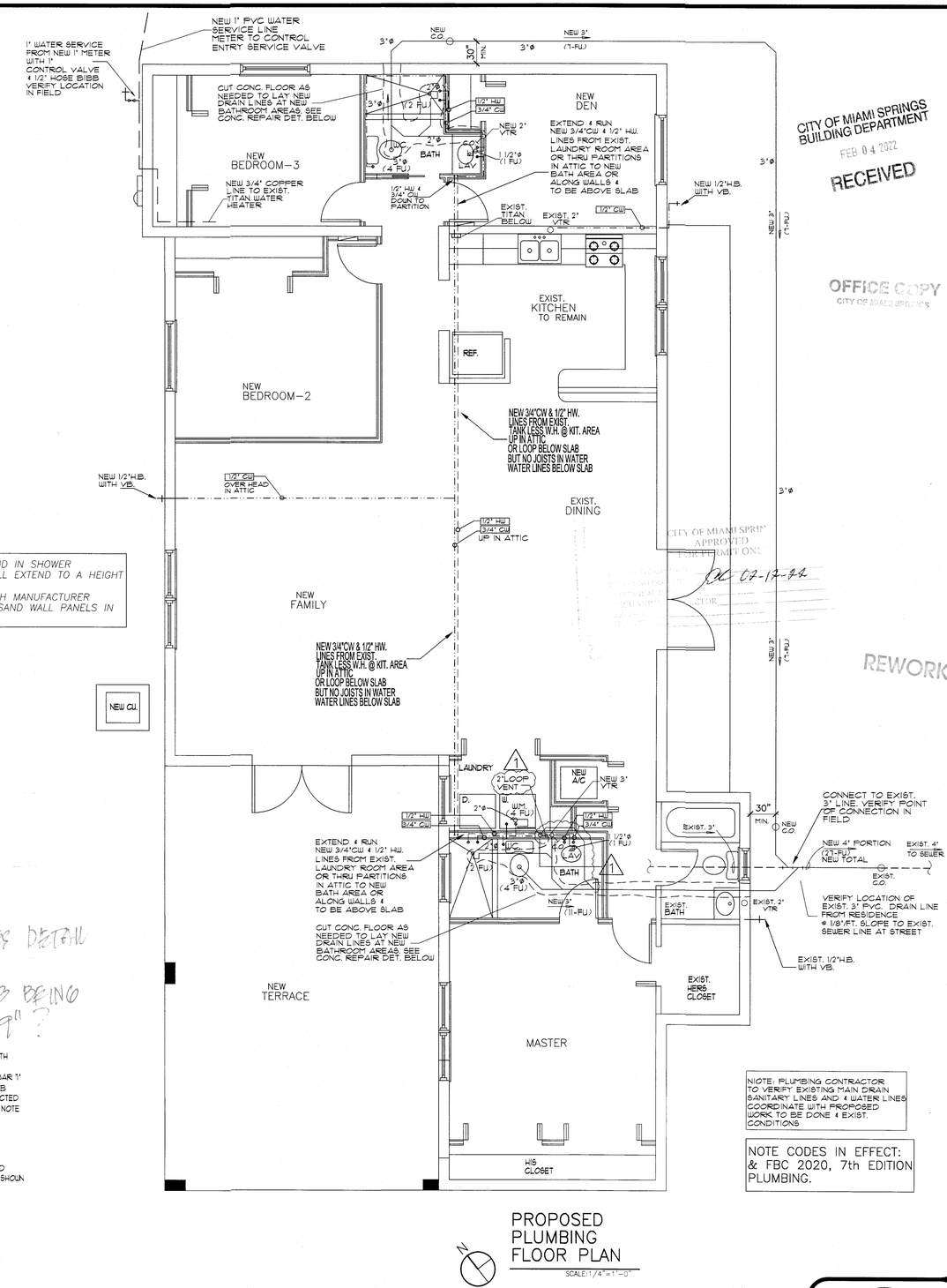

NOTE: PLUMBING CONTRACTOR TO VERIFY EXISTING MAIN DRAIN SANITARY LINES AND & WATER LINES COORDINATE WITH PROPOSED WORK TO BE DONE & EXIST. CONDITIONS

NOTE CODES IN EFFECT: & FBC 2020, 7th EDITION PLUMBING.

PROPOSED PLUMBING FLOOR PLAN
SCALE:1/4"=1'-0"

NOTE: TRADE CONTRACTOR IS RESPONSIBLE FOR ANY COST EFFECTIVE REVISIONS TO PLANS IF ORIGINAL DESIGN OF APPROVED PLANS ARE NOT FOLLOWED. A DIFFERENT METHOD IN DESIGN MAY BE USED AFTER CONSTRUCTION & PERMIT DOCUMENTS ARE ACTIVE IN FIELD, BUT AGAIN TRADE CONTRACTOR WILL BE RESPONSIBLE FOR ANY INCURRED COSTS DUE TO ANY REQUIRED REVISION WORK ON THE ORIGINAL APPROVED PLANS. ANY AND ALL CHANGES TO PLANS MUST BE APPROVED BY THE ENGINEER OR ARCHITECT OF RECORD & BUILDING DEPT. AND WILL BE BILLED ACCORDINGLY.

CITY OF MIAMI SPRINGS BUILDING DEPARTMENT
FEB 04 2022
RECEIVED

OFFICE COPY
CITY OF MIAMI SPRINGS

CITY OF MIAMI SPRINGS APPROVED FOR PERMIT ONLY
DC 02-12-22

REWORK

NO.	DATE
2-1-22 REVISED LAUNDRY WET VENT	

DESG · DRWN · CHKD · APRV · DATE

PROJECT NAME: ADDITION TO RESIDENCE FOR:
OWNER/PH: AMBAR PREVAL 786-587-7391
ADDRESS:200 N. ESPLANADE DRIVE MIAMI SPRINGS, FLORIDA 33166
PROJECT ADD: SAME

Guillermo Ramon Gonzalez
9000 SW. 168th Avenue Miami Florida 33196 Ph:305-484-8171
Registered Architect #13960 Ph:786-237-5154 (assistant)

STATE OF FLORIDA GUILLERMO RAMON GONZALEZ AR0013960 REGISTERED ARCHITECT
Guillermo Ramon Gonzalez
R.A. 13960
STATE OF FLORIDA

101521

P-1

ELECTRICAL NOTES:

1. ALL WORK SHALL BE PERFORMED IN ACCORDANCE WITH THE LATEST EDITION OF THE NEC, & NFPA-70 AND ALL OTHER PERTAINING CODES AND REGULATIONS ESTABLISHED BY AUTHORITIES HAVING JURISDICTION, AND SHALL MEET THE REQUIREMENTS OF OTHER RECOGNIZED STANDARDS AS THE ASTM,IEEE,NFPA AND NEMA,WHERE THE REQUIREMENTS OF SUCH STANDARDS ARE MORE STRINGENT THAN THOSE CITED ABOVE.
2. ALL WORK SHALL BE PERFORMED BY A LICENSED ELECTRICAL CONTRACTOR IN A FIRST CLASS MANNER, FULLY OPERATIVE, AND TO THE ACCEPTANCE OF THE OWNER AND THE ENGINEER.
3. ALL ELECTRICAL MATERIALS AND EQUIPMENT SHALL BE APPROVED BY U.L.AND SHALL BEAR THE U.L. LABEL.
4. THE PLANS ARE GENERALLY DIAGRAMMATIC AND THE CONTRACTOR SHALL COORDINATE HIS WORK WITH THE WORK OF OTHER TRADES SO THAT INTERFERENCE BETWEEN CONDUITS PIPING AND STRUCTURAL WORK WILL BE AVOIDED.
5. THE CONTRACTOR SHALL HAVE VISITED THE JOB SITE BEFORE BIDDING AND ASCERTAINED ALL EXISTING CONDITIONS WHICH WILL AFFECT HIS WORK. FAILURE TO DO SO WILL NOT BE ACCEPTED AS A REASON FOR REQUESTING EXTRA PAY IN THE EVENT THAT THE EXISTING CONDITIONS RESULT IN EXTRA MATERIALS OR LABOR.
6. ANY EXISTING CONDITION FOUND BY THE CONTRACTOR WHICH WILL ADVERSELY AFFECT THE WORK SHALL IMMEDIATELY BE BROUGHT TO THE ATTENTION OF THE OWNER AND/OR THE ENGINEER.
7. AFTER THE SYSTEM IS INSTALLED CONTRACTOR SHALL CONDUCT AN OPERATIVE TEST FOR APPROVAL AND ACCEPTANCE BY THE OWNER. EQUIPMENT SHALL BE GUARANTEED FOR A PERIOD OF 1 YEAR FROM THE DATE OF FINAL ACCEPTANCE THEREOF AGAINST DEFECTIVE MATERIALS AND WORKMANSHIP.
8. ALL CONDUCTORS SHALL BE SOFT COPPER WITH THW/THWN 600 VOLT INSULATION CONDUIT SHALL BE RGS OR IMC FOR EXTERIOR RUNS, EMT FOR CONCEALED AND INTERIOR RUNS NOT EXPOSED TO WEATHER OR MECHANICAL DAMAGE MAY BE USED UNDERGROUND WHERE BURIED 18" AND PROVIDED WITH A GROUND WIRE AS PER NEC 250.
9. TYPE "NM" GROUNDED COPPER CABLE AS MANUFACTURE BY "ROMEX" OR APPROVED EQUAL MAY BE USED WHERE IN PARTITIONS AND INTERIOR SPACES.
10. GROUNDING SHALL COMPLY WITH NEC 250 AND SHALL CONSIST OF COPPER CONDUCTORS IN CONDUIT WITH BOLTED OR BRAZED CONNECTIONS TO COLD WATER PIPE RODS, AND ALL AVAILABLE ELECTRODES. (NEC: 250.50).
    ALL METALLIC RACEWAYS SHALL BE GROUNDED.
11. MECHANICAL EQUIPMENT DISCONNECT SWITCHES SHALL BE PROVIDED WITH DUAL ELEMENT FUSES SIZED AS NOTED PER MANUFACTURER'S RECOMMENDATION VERIFY BEFORE INSTALLATION.
12. MOTORS, TRANSFORMERS AND MECHANICAL EQUIPMENT SHALL BE PROVIDED WITH GREEN FIELD FLEXIBLE CONNECTIONS, WATERTIGHT WHERE EXPOSED TO MOISTURE AND WEATHER CONDITIONS.
13. IF NO RISER DIAGRAM IS SHOWN AS PART OF THESE PLANS; CONNECT TO EXISTING PANEL, RAISE CAPACITY OF PANEL & SERVICE IF REQUIRED.

F.E.M.A. NOTES:

1. ELECTRICAL OUTLETS (RECEPTACLES AND LIGHTING) BELOW BASE FLOOD ELEVATION SHALL BE INSTALLED AT HIGHEST PERMITTED ELEVATION AND SHALL BE INSTALLED ON (SEPARATE) INDEPENDENT CIRCUITS FROM THOSE IN THE HABITAT AREAS.
2. NO APPLIANCES OR APPLIANCES OUTLETS SHALL BE INSTALLED BELOW BASE FLOOD ELEVATION.
3. A/C COMPRESSORS SHALL BE INSTALLED ABOVE BASE FLOOD ELEVATION.
4. MAIN CIRCUIT BREAKER PANELS SHALL BE LOCATED ABOVE BASE FLOOD ELEVATION.
5. IT IS SUGGESTED THAT YOU CONFER WITH FLORIDA POWER & LIGHT TO LOCATE THE ELECTRIC METER TO COMPLY WITH FEDERAL EMERGENCY MANAGEMENT AGENCY REQUIREMENTS.

NOTE: PRIOR TO INSTALLATION OF ROUGH ELECTRICAL WIRING, CHECK NAME PLATE DATA OF EQUIPMENTS, TO OBTAIN CORRECT WIRE SIZES & OVER CURRENT PROTECTION

200 A. 1PH. 3W. 120/240 — FLUSH MOUNT — EXIST. 200 AMP PANEL ELECTRICAL SCHEDULE

	CCK	DESCRIPTION	TRIP	VOLTS	COND	WIRE	KW	REMARKS
EXIST. LOADS	1–2	EXIST. GEN. LGHTS/RECEPTS.	15	120	ROMEX	14	7.1	(2,374 SQ. FT.) (3W)
	3,5	DRYER	2/25	240		10	5.0	
	4,6	EXIST. TANK LESS W.H.	2/60	240		6	16.0	
	7	REFRIGIRATOR	20	120		12	1.0	
	8	DISHWASHER	20	120		12	1.2	
	9	GARBAGE DISPOSAL	20	120		12	1.5	
	10	WASHING MACHINE	20	120		12	1.5	
	11–13	SPARES						
	12–14	SPARES	TOTAL AT 200 AMP PANEL				33.3	
OTHER EXIST. AND NEW LOADS	16–18B	125 A. 1PH. 3W. EXIST. 125 A.MP 120/240 M.C.B. FOR SUB PANEL			CONDUIT SIZE	3#1		EXIST. INTERIOR MOUNTED
	1B–8B	NEW LIGHTING & RECEPTS.	15	120	1/2"	14	--	SEE ABOVE
	9B–11B	NEW A.H.U. #2	2/60	240		6	10.0	5.2 KW COOLING LOAD NOT COINCIDENT
	10B,12B	NEW C.U. #2	2/40	240	3/4"	8		
	13B,15B	EXT. LIGHTS & RECEPTS.	20	120	ROMEX	12	--	SEE ABOVE
	14B	GFCI BATHROOM OUTLETS	20	120		12	--	SEE ABOVE
	16B,18B	EXIST. SMALL APPLIANCES	20	120		12	3.0	
	17B,19B	EXIST. RANGE	2/50	240		6	12.0	
	20B,21B	SPARES	TOTAL AT 125 AMP PANEL				25.0	
						TOTAL=	58.3	

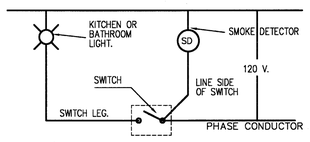

S/D NOTE:
SMOKE DETECTOR SHALL BE HARDWIRED (110 VOLT TYPE) TO A NON-SWITCHABLE KITCHEN OR BATHROOM LIGHTING CIRCUIT, WITH BATTERY BACK-UP AND SHALL NOT BE CONNECTED ONTO THE LOAD SIDE OF GROUND FAULT CIRCUIT INTERRUPTER. ALL SMOKE DETECTORS WITHIN EACH UNIT SHALL BE INTERCONNECTED.

CSD = CARBON MONOXIDE COMBO

CONNECTED LOAD
58,300
-A/C =10,000
48,300

DEMAND CALCULATION

1st 10 KW @	100%	10,000
REMAINDER @	40%	9,320
A/C @	100%	20,000
DEMAND LOAD		39,320 VA

39,320 / 240 = 163.83 AMPS

EXIST. 200 AMP MCB.
& ELECTRICAL PANELS
SUFFICES

ELECTRICAL LEGEND

	APPLIANCE OUTLET		RECESSED LIGHTING
	DUPLEX OUTLET	V	VAPOR PROOF LIGHT
	50 AMP OUTLET		CEILING MOUNT FIXTURE
△	PHONE OUTLET BY OTHERS MAY VARY IN LOCATION		WALL MOUNT FIXTURE
GFI	GROUND FAULT INTERRUPTER	F	UL-RATED FAN BOX/J BOX
WP	WATER PROOF	SD	110 V./BATT.SMOKE DETECTOR
$	SINGLE POLE SWITCH		EXIT LIGHT
3W	3 WAY SWITCH		ELECTRICAL PANEL
	DISCONNECT SWITCH		METER
	EXHAUST OR MOTOR	TV	CABLE/TV BY OTHERS MAY VARY IN LOCATION

R=RELOCATED W/EXIST. CIRCUIT
N=NEW
E=EXIST. TO REMAIN

NOTE: ALL CIRCUITING SHOWN IS PRIMARY FOR LOAD PURPOSES ONLY. ACTUAL CIRCUITING LAYOUT AND LIGHTING FIXTURE LOCATION & TYPES MAY VARY AS PER ELECTRICAL CONTRACTOR
NOTE: SEPARATE ELECTRICAL SUB PERMIT IS REQ'D. UNDER THIS MASTER PERMIT.

NOTE: 90% OF LAMPS MUST HIGH EFFICIENCY AND AT LEAST 45 LUMENS/W. OR NOT LESS THAN 65 LUMUNS/W. AS PER F.B.C. RE 404

NOTE: arc fault circuit interrupter

1. The overcurrent protection of the new circuits shall be arc fault circuit interrupter combination type circuit breakers.

A) Dwelling Units. All 120–volt, single–phase, 15– and 20–ampere branch circuits supplying outlets or devices installed in dwelling unit kitchens, family rooms, dining rooms, living rooms, parlors, libraries, dens, bedrooms, sunrooms, recreation rooms, closets, hallways, laundry areas, or similar rooms or areas shall be protected by any of the means described in 210.12(A)(1) through (6): *NO A.F.C.I. FOR OUTDOORS*

2. All receptacles 15A and 20A, 125V shall be tamper resistant, according to NEC 406.11.

NOTE: ALL OUTDOOR INSTALLATIONS SHALL COMPLY WITH NEC 110.11, 110.12, 110.26, 110.28, & 358.12

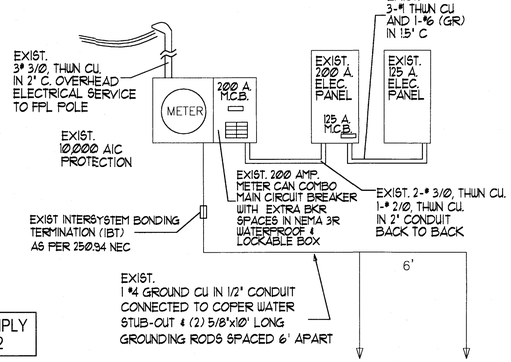

EXIST. RISER DIAGRAM

NOTE CODES IN EFFECT:
FBC 2020, 7th EDITION
ELECTRICAL & NEC 2017

NOTE: ALL SWITCHED LOCATIONS TO HAVE NEUTRAL GROUNDED CIRCUIT CONDUCTORS AS PER 404.2(C) NEC

NOTE: ALL SWITCHES, OUTLETS & LIGHT FIXTURES SHOWN ARE OR MAY VARY IN ACTUAL FIELD CONDITIONS. THIS A DIAGRAM TO SHOW APPROXIMATE LOCATIONS FOR ALL NEW OR REPLACED ELECTRICAL FIXTURES, OUTLETS ETC.

ELECTRICAL SCOPE OF WORK:
REMOVE ANY EXIST. ELECTRICAL IN AREAS BEING DEMOLISHED.
REMOVE & REPLACE ALL ELECTRICAL WIRING IN ALL AREAS.
EXIST. 200 AMP. M.C.B., & 200 & 125 AMP ELECTRICAL PANELS TO REMAIN.
PROVIDE NEW GFCI OUTLETS AT NEW BATH ROOMS AS SHOWN.
PROVIDE ALL NEW LIGHTING,SWITCHES & OUTLETS AT ALL NEW AREAS AS SHOWN.
SEE FLOOR PLAN. PROVIDE NEW SMOKE DETECTORS AT AS SHOWN.
EXIST. UNDERGROUND ELECTRICAL SERVICE TO REMAIN.

NOTE: TRADE CONTRACTOR IS RESPONSIBLE FOR ANY COST EFFECTIVE REVISIONS TO PLANS IF ORIGINAL DESIGN OF APPROVED PLANS ARE NOT FOLLOWED. A DIFFERENT METHOD IN DESIGN MAY BE USED AFTER CONSTRUCTION & PERMIT DOCUMENTS ARE ACTIVE IN FIELD, BUT AGAIN TRADE CONTRACTOR WILL BE RESPONSIBLE FOR ANY INCURRED COSTS DUE TO ANY REQUIRED REVISION WORK ON THE ORIGINAL APPROVED PLANS. ANY AND ALL CHANGES TO PLANS MUST BE APPROVED BY THE ENGINEER OR ARCHITECT OF RECORD & BUILDING DEPT. AND WILL BE BILLED ACCORDINGLY.

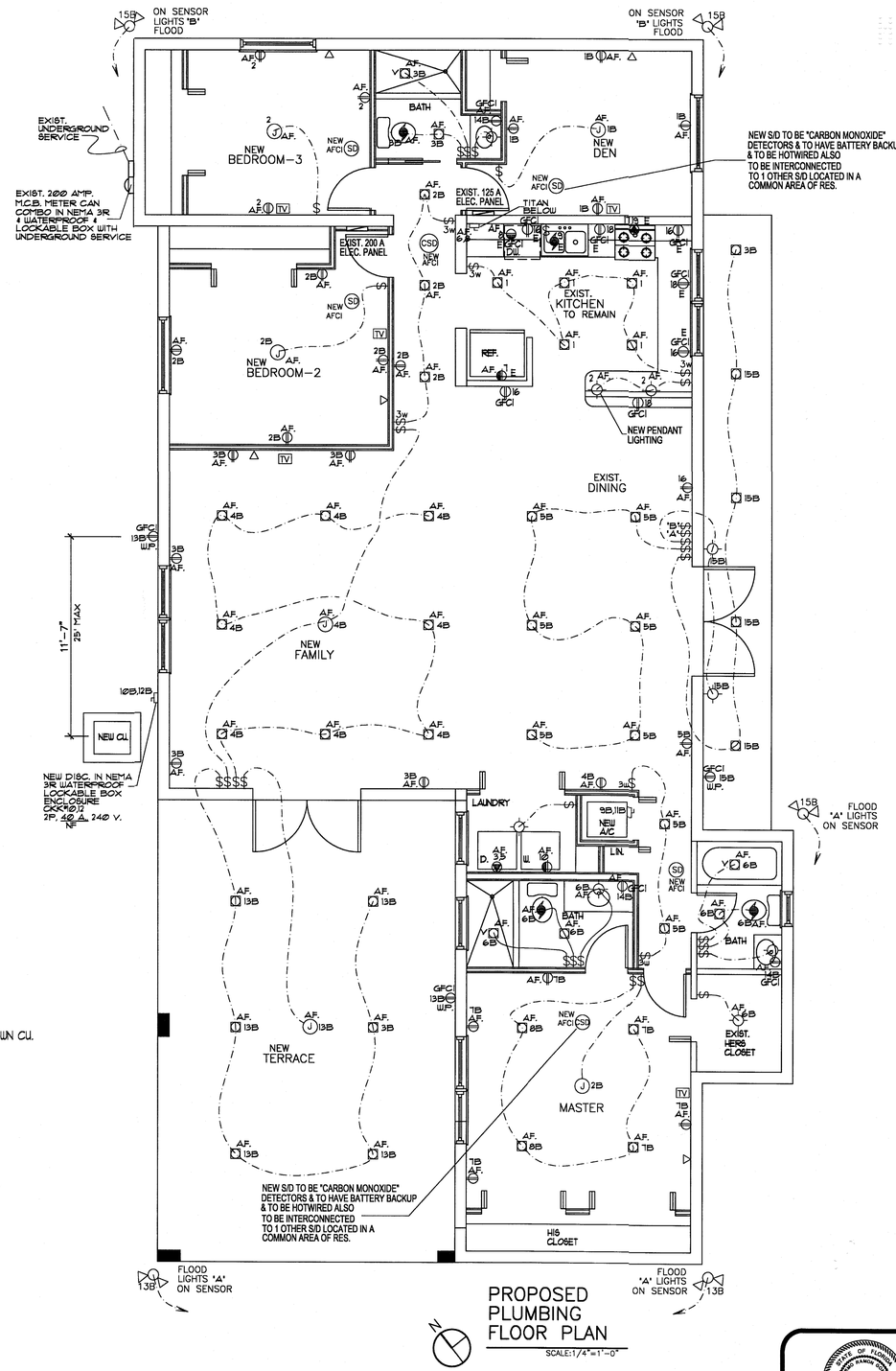

PROPOSED PLUMBING FLOOR PLAN
SCALE:1/4"=1'-0"

CITY OF MIAMI SPRINGS
APPROVED
FOR PERMIT ONLY
ELECTRICAL INSPECTOR

STATE OF FLORIDA
AR0013960
Guillermo Ramon Gonzalez
R.A. 13960
STATE OF FLORIDA

NO.	DATE
1	
2	
3	
4	

DESG	DRWN	CHKD	APRV	DATE

PROJECT NAME: ADDITION TO RESIDENCE FOR:
OWNER/PH: AMBAR PREVAL 786-587-7391
ADDRESS:200 N. ESPLANADE DRIVE MIAMI SPRINGS, FLORIDA 33166
PROJECT ADD: SAME

Guillermo Ramon Gonzalez
9000 SW. 168th Avenue Miami Florida 33196 Ph:305-484-8171
Registered Architect #13960 Ph:786-237-5154 (assistant)

101521

E-1

MIAMI SPRINGS

At the Heart of it All!

Zoning Map

Zoning

- R-1A SINGLE FAMILY RESIDENTIAL
- R-1B SINGLE FAMILY RESIDENTIAL
- R-1C SINGLE FAMILY RESIDENTIAL
- R-1D SINGLE FAMILY RESIDENTIAL
- R-3A MULTIPLE FAMILY LOW DENSITY
- R-3C MULTIPLE FAMILY MEDIUM DENSITY
- NBD NEIGHBORHOOD BUSINESS DISTRICT
- CBD CENTRAL BUSINESS DISTRICT
- AG AIRPORT GOLF DISTRICT
- NW36 NORTHWEST 36TH STREET DISTRICT
- AT ABRAHAM TRACT DISTRICT
- P-1 PUBLIC PROPERTY
- P-2 CHURCH USE
- W WATER

NORTH

0 200 400 800 Feet

RossGIS Consulting

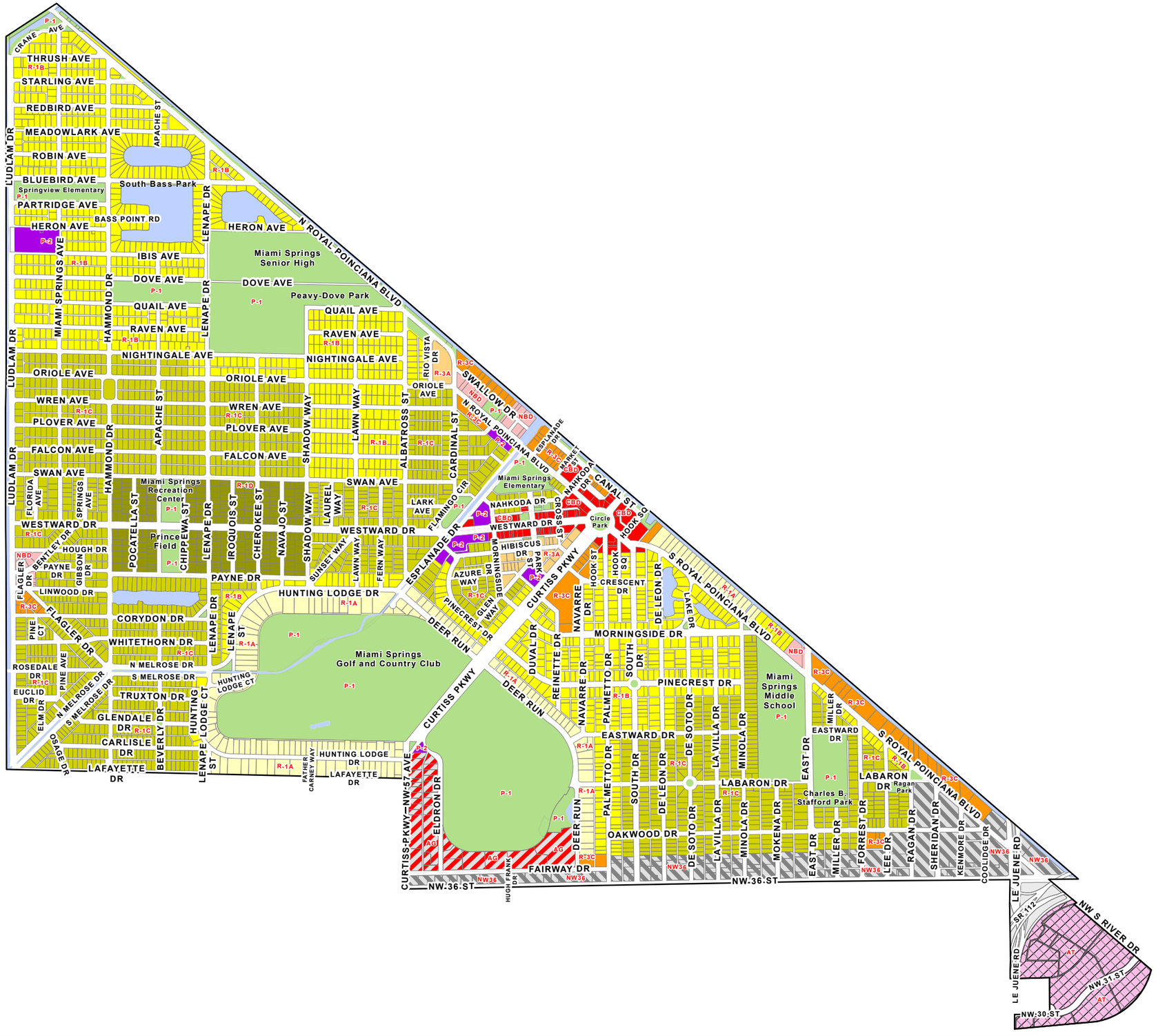

MIAMI SPRINGS

At the Heart of it All!

Zoning Map

Zoning

- R-1A SINGLE FAMILY RESIDENTIAL
- R-1B SINGLE FAMILY RESIDENTIAL
- R-1C SINGLE FAMILY RESIDENTIAL
- R-1D SINGLE FAMILY RESIDENTIAL
- R-3A MULTIPLE FAMILY LOW DENSITY
- R-3C MULTIPLE FAMILY MEDIUM DENSITY
- NBD NEIGHBORHOOD BUSINESS DISTRICT
- CBD CENTRAL BUSINESS DISTRICT
- AG AIRPORT GOLF DISTRICT
- NW36 NORTHWEST 36TH STREET DISTRICT
- AT ABRAHAM TRACT DISTRICT
- P-1 PUBLIC PROPERTY
- P-2 CHURCH USE
- W WATER

NORTH

0 700 1400 2800 Feet

RossGIS Consulting

Sec. 92-02. Compliance with zoning required before building permit may issue; effect of building code on zoning requirements.

Before any building permit is issued, all provisions of the City zoning code and any amendments thereto shall be complied with. The provisions of the South Florida Building Code shall not be construed to repeal, supersede, or modify any part of the zoning code or amendments thereto.

(Ord. 261, passed 5-14-62)

Cross reference(s)—Penalty, § 92-99.

Sec. 150-002. Definitions.

(A) All of the definitions contained in the South Florida Building Code and Southern Standard Building Code are adopted, except where the definitions contained in this section are more restrictive than those contained in these codes, in which case the definitions set forth in this chapter shall prevail.

(B) General rules of construction. The following general rules of construction shall apply to the regulations of this chapter:

(1) The word *building* or *structure* includes any part thereof, and the word *building* includes the word *structure.*

(2) The word *lot* includes the words *plot* or *parcel* or *tract* or *premises.*

(3) The words *used* or *occupied* include the words *intended, designed,* or *arranged* to be used or occupied.

(4) The terms *Board of Adjustment, Zoning and Planning Board,* and *building inspector* shall mean such authorities, bodies, or authorized representatives of the City.

(5) Words and terms not defined herein shall be interpreted in accordance with their normal dictionary meaning and customary usage.

(C) The following words and phrases shall have the following meanings ascribed to them respectively:

(1) *Accessory building.* A subordinate building in a rear yard, detached from the main building, and on the same premises as an existing main building, the use of which is clearly incidental and pertaining to that of the dominant use of the main building or land. An *accessory use* is one which is incidental to the main use of the premises.

(2) *Accessory structure.* Any structure not forming an integral part of the main building but which is customary and pertains to and is incidental to the use of the main building or land.

(3) *Alcoholic beverage.* As defined by F.S.A. § 561.01(7).

(4) *Alley.* A dedicated way not ordinarily used for general traffic, which affords a secondary means of access for service to property abutting thereon.

(5) *Amusement center.* Any business establishment, the primary use of which is to offer use of mechanical amusement devices to the public. A "primary use" shall be defined as the use of more than four mechanical amusement devices at one location without other licensed business activity. A "secondary use" is the use of four or less than four mechanical amusement devices at one location, or more than four mechanical amusement devices with the prior approval of the Board of Adjustment.

(6) *Apartment building.* A building which is used as a residence for three or more families living in separate dwelling units, but not to include hotels. See *dwelling units.*

(7) *Apartment hotel.* A building designed for or containing both apartments and individual guest rooms or rental units under resident supervision, and which maintains an inner lobby through which all tenants must pass to again access to apartments, rooms, or units.

(8) *Automatic merchandise vending machine.* Any machine or device which upon the insertion of a coin, slug, token, plate, disc, or card, will dispense merchandise of reasonable value, such as gum, candy, snack food items, soft drinks, trinkets, and other articles of a similar nature.

(9) *Automatic or coin-operated service trade machine.* Any machine or device other than a "mechanical amusement device", "automatic merchandise vending machine", or "juke box", such as a laundry washing machine or drying machine.

(10) *Awning.* A detachable roof-like cover, supported from the walls of a building for protection from sun and weather.

(11) *Bar.* Any place devoted to selling or dispensing and drinking alcoholic beverages, or any place where a sign is displayed indicating that alcoholic beverages are obtainable for consumption on the premises.

(12) *Basement.* That portion of a building between the floor and ceiling which has at least two feet of its height below the grade of the adjoining ground and the ceiling of which is not more than four feet six inches above grade.

(13) *Boardinghouse.* A building, other than an apartment hotel, hotel, motel, or motor lodge, where, for compensation and by prearrangement, lodging, meals, or lodging and meals are provided for definite periods for three or more persons, but not exceeding 12.

(14) *Breezeway.* A covered passage, open at each end, which passes through a house (or between two structures), increasing ventilation, and adding an outdoor living effect.

(15) *Buildable width.* The width of the lot left to be built upon after the required side yards are provided.

(16) *Building.* Any permanent structure attached to the real estate, and having a roof, designed or built for the support, enclosure, shelter, or protection of persons, animals, chattels, or property of any kind.

(17) *Building, height of.* The vertical distance from the grade to the highest point of the coping of a flat roof or to the deck line of a mansard roof, or to the mean height level between eaves and ridge for gable, hip, and gambrel roofs.

(18) *Building site.* Premises upon which a building is to be located, consisting of a lot or contiguous lots, plus portions of lots, but in no case less than one complete unit of platted land.

(a) *Area.* The total horizontal area within the lot lines of the lot.

(b) *Corner.* A lot abutting upon two or more streets at their intersection.

(c) *Coverage.* The percentage of the total area of a lot that, when viewed directly from above, would be covered by all principal and accessory buildings and structures, or portions thereof; provided that open balconies, awnings, and porte cocheres shall not be included in determining the building area.

(d) *Depth.* The mean horizontal distance between the front and rear lot lines.

(e) *Front.* The front of a lot shall be construed to be the portion nearest the street. For corner lots, the lot front shall be the narrowest portion abutting the street, unless determined otherwise by the planning and zoning director.

(f) *Frontage.* The distance for which the front lot line and the street line are coincident.

(g) *Through (double frontage).* Any lot having frontages on two parallel or approximately parallel streets.

(h) *Interior.* A lot, other than a corner.

(i) *Key.* An interior lot having its side lot lines coincident on one or both sides with the rear lot lines of adjacent lots.

(j) *Line.* The boundary line of a lot. On waterfront lots the established bulkhead line or where the bulkhead line has not been established, the mean high-water line shall be construed to be a lot line.

(k) *Width.* The horizontal distance between the side lot lines measured at the required front yard line and parallel to the front street line.

(19) *Canopy.* An awning or covered shelter consisting of a detachable roof-like cover, supported from the ground, roof or walls of a building, for protection from the sun or weather.

(20) *Carport.* A canopy, roof-like structure or shed, open on at least two sides, and attached to the main building for the purpose of providing shelter for one or more motor vehicles.

(21) *Clinic.* An establishment where patients are not lodged overnight, but are admitted for examination and treatment by a group of physicians or dentists practicing medicine or dentistry together. The term does not include a place for the treatment of animals.

(22) *Club, private.* Buildings and facilities or premises used or operated by an organization or association for some common purpose, such as, but not limited to, a fraternal, social, educational, or recreational purpose, but not including clubs organized primarily for profit, or to render a service which is customarily carried on as a business. These organizations and associations shall be incorporated under the laws of Florida as nonprofit corporations, and the corporations' major purpose shall not be for the purpose of serving alcoholic beverages to their members or others.

(23) *Conditional use.* A use, which when specifically listed as such within the use district regulations, may be permitted with certain stipulated conditions that will serve to insure that said use will assimilate properly into its surrounding neighborhood without deleterious effects.

(24) *Contiguous lands.* The reference to contiguous lands set forth in Charter Section 2.02 and elsewhere in the Charter and Code of Ordinances, shall mean lands in close proximity; near, neighboring, adjoining, though not necessarily in actual contact or specifically bordering or touching.

(25) *Court.* A space, other than a yard, on the same lot as a single building, or an arrangement of related buildings, which space is open, unobstructed, and unoccupied except for such things as trees, shrubs, fountains, statuary, walks, and ways, as provided herein, and it may or may not have street access.

(26) *Dish antenna.* An earth station antenna, dish-shaped, intended for the purpose of receiving communication from orbiting satellites and other extraterrestrial sources, a low-noise amplifier (L.N.A.) which is situated at the focal point of the receiving component for the purpose of magnifying and transferring signals, a coaxial cable for the purpose of carrying signals to the interior of a building, or a combination of any of these elements.

(27) *Dish antenna height.* The distance measured vertically from the bottom of the base which supports the dish antenna to its highest point when positioned for operation.

(28) *Dish antenna, private noncommercial.* A dish antenna erected solely for the use of its owners, and which is not used for commercial purposes or commercial gain. The antenna may not be used for the purpose of obtaining revenue, nor may the owners thereof charge for its use in any manner, notwithstanding its location on commercial or multifamily zoned districts.

(29) *District.* Any section or area of the City so identified and delineated on the official district zoning map for which the zoning regulations governing the use of buildings and premises, the height of buildings, the size of yards, and the intensity of use are uniform.

(a) R district. Any single or multiple-family residential district.

(b) B district. Any business or commercial district.

(c) O district. Any professional office district.

(d) P district. Any district composed of lands dedicated to the use of the public, and lands owned or controlled by a federal, state, county, or municipal body or board for public purpose, and lands devoted to parking purposes.

(30) *Dwelling.* Any building or portion thereof, attached to real estate, designed exclusively for use as permanent living quarters.

(31) *Dwelling, single-family.* A building designed for or occupied exclusively by one family.

(32) *Dwelling, single-family, detached.* A single-family dwelling, on the same lot as another dwelling or dwellings, surrounded by yards or other open spaces. Also see *Nonconforming buildings and structures.*

(33) *Dwelling, multiple-family.* A building designed for or occupied by three or more families.

(34) *Dwelling, two-family (duplex).* A building designed for or occupied exclusively by two families.

(35) *Dwelling unit.* A room, or group of rooms, occupied or intended to be occupied as separate living quarters by one family and containing independent cooking and sleeping facilities.

(36) *Family.* One or more persons, related by blood, marriage, or other such legal relationships, occupying a dwelling, and living as a single housekeeping unit, as distinguished from a group occupying a boardinghouse or hotel, as herein defined.

(37) *Fence.* A lineal structure more or less permanent, erected for a purpose, not to include hedges or walls, and controlled by height and materials when constructed on boundary lines.

(38) *Filling station.* See *service station.*

(39) *Floor area.* The sum of the gross horizontal areas of the several floors of a building or buildings. Exclusions:

(a) Accessory water tanks or cooling towers.

(b) Uncovered steps and exterior balconies.

(c) Attic space: to be utilized for storage, the location of mechanical, electrical, plumbing, air conditioning, or other building equipment, and for all other usages which support required building services; in no case shall this space be utilized as an area designated for occupancy or living area; whether or not a floor actually has been laid, providing structural headroom of less than seven feet, six inches.

(d) Terraces, breezeways, screen enclosures, or open porches.

(e) Floor space used for permitted or required accessory off-street parking spaces, in any building except single-family and two-family dwellings or buildings accessory thereto.

(f) Elevator equipment room and shaft.

(g) Mechanical shaft.

(h) Meter room.

(i) Emergency staircase, required means of egress.

(40) *Garage, private.* An accessory building or a portion of the main building, designed or used for the parking of private passenger vehicles by the occupants of the main building.

(41) *Garage, storage.* A building or portion thereof designed or used exclusively for long or short term storage of private automobiles, boats, or other private recreational vehicles, and at which motor fuels and oils are not sold, and motor-driven vehicles are not equipped, repaired, hired, or sold.

(42) *Grade.* That certain elevation established by the Dade County engineer's office for any given area in the City, entitled "minimum fill elevations," in effect on the date of this chapter, or as it may be hereafter adopted or amended.

(43) *Guest house.* Living quarters within a detached accessory building located on the same lot with the main building, not occupied year-round by temporary guests of the occupants of the premises, the quarters having no kitchen facilities or separate utility meters, and not rented or otherwise used as a separate dwelling.

(44) *Hedge.* A lineal growth of vegetation planted or cultivated for a purpose.

(45) *Height of building.* The vertical distance from the grade to:

(a) The highest point of a flat roof.

(b) The deck line of a mansard roof.

(c) The average height between eaves and the ridge for gable, hip, and gambrel roofs.

(d) The average height between high and low points for a shed roof.

(46) *Home/business occupation.* Home/business occupation shall mean any business use conducted entirely within a dwelling and carried on by only persons residing in the dwelling unit, which is clearly incidental and secondary to the use of the dwelling for residential purposes and does not change the character thereof and in connection with which there is no display or stock in trade. The home/business occupation shall involve computer, phone and mail use only and shall not involve the use of any accessory building or yard space or activity outside of the main building not normally associated with residential use (See Code of Ordinance § 150-046 for the use regulations established for this use).

(47) *Homes, nursing, convalescent, or extended care.*

(a) Nursing home. A facility providing long-term care of the chronically ill, the physically disabled, and the aged who are unable to care for themselves.

(b) Convalescent home or extended-care facility. A facility for the care of persons recovering from illness or surgery who do not need the intensive care of the general hospital, but are not yet well enough to go home.

(48) *Hospital.* A building or group of buildings, having room facilities for overnight patients, used for providing services for the inpatient medical or surgical care of sick or injured persons, and which may include related facilities, central service facilities, and staff officers; provided that the related facility must be incidental and subordinate to the main use, and must be an integral part of the hospital operations. Hospital-related facilities include nursing homes, convalescent homes, or extended-care facilities.

(49) *Hotel.* A building in which lodging or boarding and lodging are provided and offered to the public for compensation, and in which ingress and egress to and from all rooms is made through an inside lobby or office which is supervised by a person in charge at all times. As such, a hotel is open to the public, distinguished from a boarding or lodging house, apartment hotel, or multiple dwelling.

(50) *Juke box.* Any music vending machine, contrivance, or device which, upon the insertion of a coin, slug, token, plate, disc, or key into any slot, crevice, or other opening, or by the payment of any price, operates or may be operated for the emission of songs, music, or similar amusement.

(51) *Lot coverage.* The area of the lot covered by the ground floor of all principal buildings, plus all areas covered by the roofs of such buildings, as for example, covered porches and terraces.

(52) *Marijuana.* Any strain of cannabis or marijuana, in any form, that is authorized by state law to be dispensed or sold in the State of Florida. Also referred to as "medical marijuana."

(53) *Mechanical amusement device.* Any machine or device other than an "automatic merchandise vending machine", "automatic or coin-operated service trade machine", or "juke box", which, upon the insertion of a coin, slug, token, plate or disc, may be operated by the public generally for use as a

game, entertainment, or amusement, whether or not registering a score; including but not limited to such devices as marble machines, mechanical grab machines, indoor shuffle boards, pinball machines, skill ball, shuffle alleys, mechanical grab machines, electronic game machines, or movie machines.

(54) *Medical marijuana dispensary.* A retail establishment, licensed by the Florida Department of Health as a "medical marijuana treatment facility," "medical marijuana treatment center," "dispensing organization," "dispensing organization facility" or similar use, that sells and dispenses medical marijuana.

(55) *Mezzanine.* An intermediate floor in any story or room with floor area, not exceeding one-third the total floor area in that room or story in which the mezzanine occurs, and with clear height above or below the mezzanine floor construction, not less than seven feet.

(56) *Motel, motor court, tourist court, or motor lodge.* A building in which lodging, or boarding and lodging are provided and offered to the public for compensation. As such, it is open to the public as distinguished from a boarding or lodging house, or a multiple dwelling; same as a hotel, except that the buildings are usually designed to serve tourists traveling by automobile, ingress and egress to rooms need not be through a lobby or office, and parking usually is adjacent to the dwelling unit.

(57) *Nonconforming building or structure.* A building or structure which is not in compliance with the zoning requirements of the district classification in which it is located.

(58) *Nonconforming use.* The use of a building or portion thereof, or land or portion thereof, which use does not conform with the use requirements of the district in which it is situated.

(59) *Package store.* A store that sells alcoholic beverages in sealed containers for consumption off-premises; a liquor store.

(60) *Parking, off-street.* Parking spaces entirely on the premises, and not extending into streets, alleys, or other public ways.

(61) *Parking space.* An area of not less than ten feet by 22 feet per vehicle, paved with asphalt, concrete, or other material approved by the building department, and striped, exclusive of driveway for ingress and egress. On diagonal parking, the ten-foot width shall be measured at right angles between the parallel lines.

(62) *Pervious area.* A surface area that allows, without difficulty, penetration by water.

(63) *Porte-cochere structures.* A covered driveway structure attached to the front entrance of a residence under which vehicles, excluding recreational vehicles, may be driven or parked in accordance with the conditions and requirements set forth in the appropriate zoning district category of the City Code of Ordinances.

(64) *Premises.* Any lot, plat, parcel, or tract of land which is or may, under this chapter, be occupied or used as the location of a structure.

(65) *Public use floor area.*

(a) In motion picture theatres, *public use floor area* is defined as the lobby area or areas used for recreational uses other than the auditorium.

(b) In hotel/motel and apartment complexes, *public use floor area* is defined as the lobby area, recreational building or areas specifically used for recreational uses within the building.

(c) In all other use categories, *public use floor area* is defined as the area devoted to the principal use or activity.

(d) No open air public use area shall contribute to the calculation of *public use floor area.*

(66) *Recreational vehicles.* Campers, racing cars, trailers, buggies, air boats, boats, boat trailers, airplanes, and any other similar combinations generally classified and used as recreational vehicles.

(67) *Revitalization specialist.* A City Consultant, Consulting Firm, or Administrative Staff Employee with expertise in the areas of zoning, planning, architectural design, building construction and renovation, and commercial redevelopment and revitalization, providing assistance and advice to the City on proposed commercial development, renovation and improvement, and redevelopment and revitalization projects in the City.

(68) *Screen.* A lineal structure more or less permanent, erected or planted for privacy, esthetics, and limiting view; and which shall be constructed of a growth of vegetation, certified redwood, metal, concrete, or other similar materials, and which shall not exceed six feet in height, and which shall not impede ventilation of the adjacent property.

(69) *Servants' quarters.* An accessory residential building designed to be occupied by not more than two employees of the occupant of the main building. The quarters shall not include kitchen or cooking and eating facilities.

(70) *Service station.* Any building, structure, or land used for the retail sale of motor vehicle fuels, oils, and accessories, and the servicing or repairing of minor parts and accessories, but not including major repair work, such as motor replacement, body and fender repair, or spray painting, and excluding public garages.

(71) *Sign.* Any display of characters, letters, illustrations, or any ornamentation designed as an advertisement or announcement, or to indicate direction or location.

(72) *Single-family residence.* A private residence building used or designated to be used as a home or residence in which all living rooms are accessible to each other from within the building, and in which the use and management of all sleeping quarters, all appliances for cooking, ventilating, heating, or lighting are under one control, and which shall be occupied exclusively by one family. There shall be only one front entrance. Doors or other openings constituting more than one front entrance shall be permitted only where the owner can demonstrate a single-family use of the residence. The Board of Adjustment may grant approval for more than one front entrance only upon proof of the owner's intent to use the residence for single-family use and the owner shall execute and record a covenant running with the land restricting the residence's use to that of a single family, provided, however, that such doors or other openings are not exits or entrances to a sleeping room.

Cross reference(s)—Single-family dwelling, § 150-002(C)(31); single-family detached dwelling, § 150-002(C)(32).

(73) *Street.* A public thoroughfare which affords the principal means of access to abutting property.

(74) *Structure.* Anything constructed or erected, the use of which requires more or less permanent location on the ground, or attached to something having a permanent location on the ground, including but without limiting the generality of the foregoing; advertising signs, billboards, back stops for tennis courts, fences, walls, pergolas, and screen enclosures.

(75) *Structural alterations.* Any change in the supporting members of a building, such as bearing walls or partitions, columns, beams, or girders, or any substantial change in the roof or in the exterior walls, excepting the repair or replacement as may be required for the safety of the building.

(76) *Trailer.* Any vehicle which is not propelled, and which is designed to be towed by a motorized vehicle.

(77) *Unplatted land.* Any land that is not depicted by plat recorded in the Dade County Circuit Court Clerk's Office.

(78) *Variance.* A variance is a relaxation of certain regulations contained in this chapter where the variance will not be contrary to the public interest and where, owing to conditions peculiar to the property and

not the result of the actions of the applicant, a literal enforcement of this chapter would result in unnecessary and undue hardship.

(79) *Vehicle.* A conveyance for persons or material.

(80) *Vehicle, commercial.* A vehicle not designated exclusively for the transportation of persons.

(81) *Veterinary clinic.* A professional office for the care and medical treatment of small pets consisting of animals, birds, or reptiles of less than 150 pounds operated by a duly licensed doctor of veterinary medicine, the operation of which must be conducted totally within an air-conditioned building which maintains no outside facilities for storage, housing, exercise, or any other purpose. No boarding or storage of any pet is permitted except when necessary to provide medical treatment. No animal waste shall be permitted outside the clinic. Any waste occurring outside the clinic shall be removed and the area cleaned by the owner of the clinic immediately.

(82) *Visibility triangle.* Area formed within a property by the intersection of two street lines or of a street line and any driveway line, or the projections thereof and a straight line connecting them at a certain distance from their point of intersection. (Figure 1)

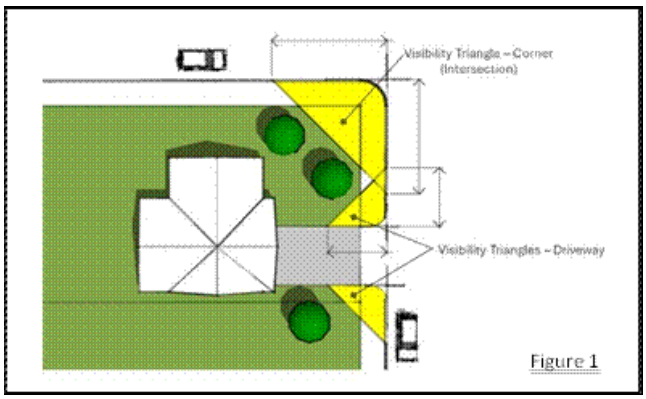

(83) *Wall.* Boundary or decorative, solid or semi-open lineal structure, of concrete block, stone, or other material erected for a purpose, and not exceeding four feet in height.

(84) *Yard.* Any space between a main building and the adjacent lot lines. In measuring a yard for the purpose of determining the width of a side yard, or the depth of a front yard, or the depth of a rear yard, the minimum horizontal distance between the lot line and the nearest part of the main building shall be used.

(85) *Yard, front.* A yard extending across the front of a lot, and being the minimum horizontal distance between the front lot line and the nearest part of the main building. On corner lots, the front yard shall be considered as adjacent to the street upon which the lot has its least dimension. The following shall constitute the only permitted encroachments into the minimum front yard setback areas:

(a) Eaves, cornices, and roof overhangs; not to exceed 30 inches.

(b) Uncovered stoops and steps, not to exceed 36 inches.

(c) Bay windows, uncovered balconies, and similar projecting features, not to exceed 36 inches.

(d) Window and door awnings and shutters, not to exceed 36 inches.

In no instance shall any projecting feature shall be any closer than 36 inches to a property line or to a fence or wall constructed along the property line.

(86) *Yard, rear.* A yard extending across the rear of a lot, and being the required minimum horizontal distance between the rear lot line and the rear of the nearest part of the main building. The rear yard

shall be that portion of the lot that is opposite and most distant from the front yard. Despite the definition contained herein, for total rear yard area computation purposes only, the entire open and non-constructed areas behind the rear of the main building and extending to the rear lot line, shall be used for such calculations. The following shall constitute the only permitted encroachments into the minimum rear yard setback areas:

(a) Eaves and overhangs; not to exceed 30 inches.

(b) Stoops and steps (covered or uncovered); not to exceed 36 inches.

(c) Bay windows, balconies (covered or uncovered), and similar projecting features, not to exceed 48 inches.

(d) Window and door awnings and shutters, not to exceed 36 inches. In no instance shall an awning project closer than 3 feet to a property line.

(87) *Yard, side.* A yard between the main building and the side line of a lot, extending from and between the required front yard to the required rear yard, and being the minimum horizontal distance between a side lot line and the side of the nearest part of the main building. It is contemplated that building indentations, niches, or cutout areas may be provided adjacent within the side yards of properties and that such areas may constitute a part of the total side yard area, but shall not be permitted within the minimum side setback area. The following shall constitute the only permitted encroachments into the minimum side setback area:

(a) Eaves and overhangs; not to exceed 30 inches, nor closer than three feet to any side property line.

(b) Uncovered stoops and steps; not to exceed 36 inches.

(c) Bay windows, uncovered balconies, and similar projecting features, not to exceed 30 inches.

(d) Window and door awnings and shutters, designed and installed per Sec. 150-025, not to exceed 36 inches. In no instance shall an awning project closer than 3 feet to a property line.

(Code 1962, § 25-2; amend. Ord. 599-77, passed 3-28-77; amend. Ord. 677-83, passed 4-25-83; amend. Ord. 697-85, passed 1-14-85; amend. Ord. 704-85, passed 6-24-85; amend. Ord. 728-88, passed 2-8-88; amend. Ord. 730-88, passed 9-26-88 amend. Ord. 755-89, passed 12-11-89; amend. Ord. 894-03, passed 3-10-03; amend. Ord. 906-03, passed 9-22-03; amend. Ord. 908-03, passed 11-10-03; amend. Ord. 936-06, passed 6-12-06; amend. Ord. 938-06, passed 8-28-06; amend. Ord. 944-06, passed 9-11-06; amend. Ord. 1014-2011, passed 4-12-11; amend. Ord. 1044-2012, passed 12-10-12; amend. Ord. 1098-2017, passed 11-13-17; amend. Ord. 1108-2018, passed 9-24-18; amend. Ord. 1109-2018, passed 9-24-18; amend. Ord. 1111-2019, passed 1-14-19; amend. Ord. No. 1141-2024, passed 9-9-24)

Sec. 150-004. District uses.

Except as hereinafter provided, it shall be unlawful to erect, construct, or cause to be constructed, any structure, or to use or permit the use of any structure or land which does not comply with the regulations established by this chapter for the district in which the structure is located.

(Code 1962, § 25-4; amend. Ord. 184-J, passed 2-8-54)

Sec. 150-018. Plans and surveys.

(A) Each application for a building permit shall be accompanied by a plan or plat drawn to scale showing actual dimensions of the lot to be built upon, the size, shape, and location of the building to be erected, the size, shape, and location of any existing building on the lot, and such other information as may be necessary to provide for the enforcement of this chapter.

(B) After pouring the footing and prior to further construction, a plat of the survey, prepared by a registered land surveyor of the state, shall be supplied to the building inspector for all main buildings, indicating the exact location of the building on the lot or building site.

(Code 1962, § 25-11; amend. Ord. 184, passed 2-8-54)

Sec. 150-019. Subdivisions; plat; approval.

(A) It shall be unlawful to subdivide any property within the City, or to open, grade, or improve any street therein, or to erect, construct, or cause to be constructed any residence or other structure on any unplatted land, until a plat of the proposed subdivision shall have been approved by the City Council.

(B) *Subdivision* shall be defined as a division of a lot, tract, or parcel of land or water into two or more lots, plats, sites, or other subdivisions of land or water for the purpose, whether immediate or future, of sale, rent, lease, building development, anchorage, right-of-way dedication, or other use.

(C) No building permit, occupational license, license, or permit shall be issued for any improvement, construction, or use of an unplatted lot within the City unless the recording of a plot is not required by state statute, county ordinance, or regulatory rule, or is otherwise waived or excepted by this Code. The owner of developer of any properly platted or waived parcel shall be entitled to only one building permit, occupational license, license, or permit for all initial construction on each single platted lot or parcel of land.

(D) No plat or replat shall be approved unit the following requirements have been met:

(1) *Tentative plat.* A tentative plat to be approved by the Zoning and Planning Board showing all lots, streets, and alleys, if required, together with their dimensions, as well as connecting adjoining streets and the elevation of the land in the subdivision to be expressed in feet above mean sea level (United States coast and geodetic survey datum). The elevations may be shown as contours at one-foot intervals.

(2) *Final plat.* The final plat shall show, wherever required, the limits of areas thereof to be filled, together with the elevation of such fills. The elevation of fills, wherever required, shall be as established by the Dade County engineer's office, and as shown on the current official map of the City, on file in the office of the City Clerk, the map being made, by reference, a part of this chapter.

(3) *Agreement; bond.* All persons, firms, and corporations submitting plats to the City Council for approval shall accompany the plat with an agreement providing for the paving of streets, the construction of sidewalks and drainage structures, and the installation of adequate water mains, fire hydrants, street lighting, and other improvements as the council deems necessary in the subdivision, which installation shall be in accordance with the specifications as set forth by the City Council. The agreement shall be accompanied by a surety bond in the penal sum of not less than 110 percent of the estimated cost of construction. The agreement shall be approved by City Council and filed with the City Clerk. The condition of this bond shall be such that the principal shall fully and faithfully perform all the terms and conditions of the principal's agreement, and within the time specified therein. The bond shall be released by the City only upon satisfactory completion of the work specified in the agreement as evidenced by written certification by the City engineer, including certification that the elevations of all

pavements, sidewalks, and fills comply with the provisions of the chapter. The agreement shall stipulate such time limits as the City Council shall require for the various installations specified therein.

(4) *Alleys.* If appropriate to the parcel being platted or replatted, and required by the City Building and Zoning Department or other appropriate administrative staff, a plat or replat shall include properly dedicated alleys in the rear of the lots shown on the plat or replat, which alleys shall not be less than 16 feet in width, and in the alleys there shall be provided returns having 25-foot radii to permit free ingress and egress, where the alleys intersect other alleys, to permit vehicles to pass in and out without encroaching on adjoining property.

(5) *Lot sizes.* All building sites and lots in residential districts shall have a minimum width of 75 feet and a minimum depth of 100 feet, and all building sites or lots in commercial or business districts shall have a minimum width of 50 feet and a minimum depth of 100 feet. The purpose and intent of this division is to prevent the reduction in size of lots and tracts, or parcels of land from being redivided to parcels of less than the minimum required herein. It is not intended to prevent lots in existence at the time of passage of this chapter from being increased in size or width even though the increase does not reach the prescribed minimum.

(6) *Compliance.* The granting of a plat or replat is specifically conditioned upon the applicant's satisfactory compliance with all appropriate provisions of § 150-020.

(E) Waiver of plat. All waivers of plat shall meet the requirements of § 150-020.

(Code 1962, § 25-12; amend. Ord. 184, passed 2-8-54; amend. Ord. 184.9, passed 3-28-55; amend. Ord. 599-77, passed 3-28-77; amend. Ord. 750.89, passed 10-23-89)

Sec. 150-020. Plat, replat, and waiver of plat procedure.

(A) All plats, replats, or petitions for waiver of plat shall comply with the following requirements:

(1) The provisions of the Dade County Code of Ordinances chapter 28.

(2) All applications for platting, replatting, or waiver of platting shall be submitted to the City Manager and the City Building Official on such forms and with such attachments, exhibits, and information as is required by the Code of Ordinances of Dade County, the City of Miami Springs or by the City Manager's administrative order for review and submission to the City Zoning and Planning Board. Prior to submission to the City Zoning and Planning Board for review and recommendation, the City Manager and the building official shall determine if:

(a) The proposed plat, replat or waiver of plat conflicts in any respect with the City Code of Ordinances or the City comprehensive plan;

(b) All documents required by law, including a current survey are attached to the application;

(c) The proposed legal description of each lot, location of property lines, existing or proposed easements, structures, elevations, water and sewer and other utilities and other essential features are correctly set forth;

(d) The public health, safety, and welfare is served by the proposed design of the lots described in the plat, replat, or waiver of plat;

(e) Adequate utilities and services are proposed or available;

(f) There are adequate provisions for the safety and convenience of vehicular and pedestrian travel;

(g) A waiver of plat application will meet the requirements of this Code;

(h) Additional improvements for the protection of the environment are necessary;

(i) The completion or performance bond is adequate to complete required improvements;

(j) Resurveying by a surveyor retained by the City is required;

(k) Dedications or reservations are required.

(3) The application shall be accompanied by:

(a) A minimum application fee that shall be established by City resolution and paid to the City to defray the initial costs the City will incur in processing each application for plat, replat, waiver of plat, and to investigate all applicant representations prior to final approval, and in addition, an agreement by the applicant to reimburse the City for all engineering, legal, and other technical support costs incurred by the City in the processing of any application. All additional costs shall, within five days after notice, be paid to the City and in all cases, received prior to submission of the plat, replat or waiver of plat to the county. The applicant shall also be responsible to pay all charges or fees that may be assessed by the county.

(b) A completion or performance bond and agreement as required by §§ 150-019(C)(3), 150-020(A)(2)(i).

(4) All streets, easements, alleys, rights-of-way, public lands, water and sewer, or other public facilities shall be accompanied by an appropriate opinion of title from a title company or the applicant's attorney.

(5) A lot, tract, or parcel of land sought to be subdivided by waiver of plat shall be divided into no more than two lots if it is determined by the City Council that waiving of the requirements for platting would not conflict with the purpose and intent of this chapter. In addition, the council shall determine if:

(a) The subdivision of land heretofore platted is of such unusual size or shape or is surrounded by such development or unusual conditions as may justify the waiving of the requirements for recording a plat. In lieu of recording a plat, conditions may be imposed as may be deemed necessary and appropriate to preserve the public interest, including recording of the waiver of plat agreement and survey.

(b) In lieu of platting, the City Council may require any dedications, reservations or improvements required in connection with platting under this chapter, including the posting of a surety bond as may be necessary to carry out the intent and purpose of this chapter.

(6) Following review by the City Zoning and Planning Board, all tentative plats, replats, and waivers of plat shall be submitted to the City Council for approval.

(7) Upon approval by the City Council, the applicant shall submit the tentative plat, replat, or waiver of plat to the plat division of Metropolitan Dade County for review and approval.

(8) Upon approval of the tentative plat, replat, or waiver of plat from the plat division of Metropolitan Dade County, the applicant shall prepare and submit the final plat, replat, or waiver of plat to the City for final review and approval by the City Council.

(9) After securing final approval from the City Council, the applicant shall submit the final plat, replat, or waiver of plat to the plat division of Metropolitan Dade County for final county commission approval.

(10) Upon securing approval from Metropolitan Dade County, the final plat, replat, or waiver of plat shall be transmitted to the clerk of the county circuit court for recording.

(B) Notwithstanding anything to the contrary contained herein, the City Council may impose any additional reasonable requirements for the protection of the public health, safety, and welfare as a condition for the approval or granting of any plat, replat or waiver of plat.

(Ord. 750-89, passed 10-23-89)

Sec. 150-021. Interpretation; conflicts.

In interpreting and applying the provisions of this chapter, they shall be held to be the minimum requirements for the promotion of the public safety, health, convenience, comfort, morals, prosperity, and general welfare. This chapter supersedes and supplants all previous zoning ordinances. It is not intended by this chapter to interfere with or abrogate or annual any other ordinances, rules, regulations, or permits previously adopted or issued, and not in conflict with any of the provisions of this chapter, or which shall be adopted or issued pursuant to law relating to the use of buildings or premises and likewise not in conflict with this chapter; nor is it intended by this chapter to interfere with or abrogate or annual any easements, covenants or other agreements between parties. However, where this chapter imposes a greater restriction upon the use of buildings or premises or upon height of buildings, or requires larger open spaces or larger lot or floor areas than are imposed or required by the ordinances or agreements, the provisions of this chapter shall control.

(Code 1962, § 25-34; amend. Ord. 184, passed 2-8-54)

Sec. 150-039.4. Installation of mechanical equipment.

(A) *Location—New installation.* Mechanical equipment, including but not limited to central air conditioning and heating units, pool pumps, sprinkler pumps, generators, propane tanks and similar mechanical equipment may be located in side and rear yards, with a minimum setback of five feet. Mechanical equipment located in a corner side yard shall have a minimum set back of ten feet. The placement of mechanical equipment in the front yard is prohibited.

(B) *Location—Existing installation.* The aforesaid provision shall not be applicable to mechanical equipment that is being replaced for already existing residential structures, which may be installed in the same location as the equipment being replaced.

(C) *Screening.* All mechanical equipment must be properly obscured and screened from view by the planting of appropriate landscaping materials or the installation of fences, walls, or other appropriate and approved screening materials.

(D) *Installation standards and requirements.* Mechanical equipment shall only be installed in accordance with the rules, regulations and requirements of the City of Miami Springs, Miami-Dade County, and the Florida Building Code of the State of Florida.

(E) *Installation supervision and control.* The installation of mechanical equipment on residential homesites within the City shall be supervised and controlled by the City Building Department.

(Ord. 940-06, passed 8-28-06; amend. Ord. 953-07, passed 2-26-07; amend. Ord. 1042-2012, passed 1-14-13; amend. Ord. 1097-2017, passed 11-13-17; Ord. No. 1131-2023, passed 2-27-23)

Sec. 150-043. R-1C district.

(A) *Uses permitted.*

(1) One single-family dwelling. In no case shall there be more than one main building on a lot.

(2) Accessory structures and uses incidental to the single-family dwelling when placed on the same lot or parcel of land and not used or operated commercially, including, private garages, children(s) playhouses, tool sheds, and workshops. Accessory structures and uses such as servant(s) quarters, guest houses, and any other type of dwelling or dwelling unit are prohibited. Notwithstanding any other definition or provision contained within the Code of Ordinances to the contrary, the "total rear yard area" for the purposes of the calculations required for the determination of the percentage of rear yard occupancy shall include all areas of property on the site from the vertical walls of structure backward to the rear property line, regardless of whether any such wall is recessed behind the part of the structure from which the required rear yard setback is measured. Accessory structures and all constructed additions shall conform in design and character to that of the main building and be constructed in accordance with all other applicable provisions of City Ordinances. Except for swimming pools and decks setbacks, the placement and location of all such accessory structures in rear yards of properties shall be as follows:

(a) Minimum rear yard setback: Five feet.

(b) Minimum side yard setback: 10% of lot width. No less than five feet for interior lot lines and no less than 15 feet for corner lot lines.

(c) Minimum distance separation from main residence and other accessory structures: 10 feet.

(d) Maximum number of accessory structures: Three.

(e) Maximum rear yard lot coverage: 15%.

(3) Signs. See Signs, § 150-030.

(B) *Building height limit.* The maximum building height of main buildings shall be two stories which shall not exceed 30 feet. For accessory structures, the roof tie beam shall not exceed ten feet in height, and the roof height shall not exceed 15 feet. Notwithstanding the foregoing, the Board of Adjustment and City Council can approve additional heights for structures when the additional heights are for architectural design features which do not constitute living space and which are not inconsistent with the character of the surrounding neighborhood. Any application for approval pursuant to this provision shall not be considered a variance, but an exceptional approval by the Board and City Council.

(C) *Building site area required.* The minimum building site area shall be one lot or parcel of land 10,000 square feet in area for each single-family dwelling. The parcel shall have a minimum average width of at least 75 feet. (For exemptions for undersized legal non-conforming lots see § 150-092(C)).

(D) *Front yard required.* There shall be a front yard of a depth of not less than 30 feet, unless the average depth of the front yard of the contiguous lot or lots is either greater or less than 30 feet, in which case the front yard shall be the average depth of the front yard of the contiguous lot or lots. In case there is no dwelling on the block, the depth of the front yard shall be a minimum of 30 feet. The maximum depth of the front yard permitted shall be not more than 50 percent of the depth of the lot or building site.

(E) *Side yard requirements.*

(1) *Side yards required for one-story buildings.* The width of the required side yards for one-story buildings shall each be ten percent of the average width of the lot, but in no case shall each side yard be less than five feet in width. Side yards adjacent to streets shall be not less than 15 feet. Side yards shall be

measured from the closest point of the structure to the side lot line, on a bearing parallel to the front lot line, at ground level.

(2) *Continuation of a legal non-conforming setback.*

(a) A legal non-conforming setback may be continued horizontally as long as the provided setback is no less than 50% of the required setback.

(b) A legal non-conforming setback may be continued vertically as long as the provided setback is no less than 50% of the required setback.

(F) *Rear yard required.* There shall be a rear yard not less than 25 feet in depth.

(G) *Floor area requirements.* The minimum floor areas of dwellings in this district shall be 1,200 square feet.

(H) *Maximum lot coverage.* There shall be a maximum lot coverage of 40%.

(I) *Minimum landscaped pervious area.* There shall be a minimum landscaped pervious area of 30%.

(Code 1962, § 25-21; amend. Ord. 184, passed 2-8-54; amend. Ord. 713-86, passed 9-8-86; amend. Ord. 754-89, passed 11-13-89; amend. Ord. 768-90, passed 9-10-90; amend. Ord. 791-92, passed 5-11-92; amend. Ord. 907-03, passed 10-13-03; amend. Ord. 937-06, passed 8-28-06; amend. Ord. 954-07, passed 3-26-07; amend. Ord. 1109-2018, passed 9-24-18; amend. Ord. 1137-2024, passed 1-8-24)

Sec. 150-092. Nonconforming uses.

(A) A nonconforming use of a building, or portion thereof, or of land, which use existed lawfully at the time of adoption or subsequent amendment of this chapter, may be continued, provided that:

(1) No building which has been damaged by fire, explosions, act of God, or the public enemy, to the extent of more than 50 percent of the replacement value of the building immediately prior to the damage, shall be restored, except in conformity with the requirements of this chapter.

(2) No building or portion thereof, or land used in whole or in part for nonconforming purposes according to the provisions of this chapter, which hereafter becomes and remains vacant for a continuous period of three months, shall again be used except in conformity with the regulations for the district in which the building or land is situated.

(3) A nonconforming use of a building or land shall not be extended or enlarged.

(4) A nonconforming structure that was erected, converted, or structurally altered in violation of the provisions of the ordinance which this chapter supersedes, shall not be validated by the adoption of this chapter, and the violations or any violations of this chapter may be ordered removed or corrected by the proper officials at any time.

(5) The lawful use of land for storage purposes, or for advertising signs and billboards, which does not conform to the provisions of this chapter, shall be discontinued within three years from the date of the adoption of this chapter, and the uses of land which become nonconforming by reason of a subsequent change in this chapter shall also be discontinued within three years from the date of the change.

(6) Whenever a nonconforming use of a building has been changed to a conforming use, the use shall not thereafter be changed to a nonconforming or less restricted use.

(7) Once a nonconforming use is abandoned for a continuous period of three months, it cannot be reestablished until it conforms to the provisions of this chapter.

(B) Nonconforming residential homes, multiple-family dwellings and commercial buildings that meet the following listed qualifications shall be exempt from the platting requirement of § 150-019 as provided herein:

(1) *Qualifications.* Each property seeking to qualify for exemption pursuant to this section must meet all of the following conditions and requirements:

(a) The property was initially platted as a separate lot or lots and was subsequently replatted as part of a tract of land, or the property was originally platted as a tract of land without individual lots.

(b) The City issued a building permit for the construction of a single-family residential home, multiple-family dwelling or commercial building on the property while it remained part of a tract or land without being replatted.

(c) The property has since remained part of a tract of land since the construction of the existing structure on the property.

(d) The structure built on the property presently exists on the same portion of the tract upon which it was originally constructed.

(e) The property conforms, in all other respects, to the City Code of Ordinances. If not, the property may still qualify for the exemption provided herein, if the property owner secures a variance from the City for whatever other violation or nonconformity may exist on the property.

(2) *Ordinance exemption.* All qualified residential homes, multiple-family dwellings and commercial buildings shall be exempt from the prohibition of § 150-019 that no building permit shall be issued for any improvement or construction on any unplatted land within the City.

(3) *Limitation on exemption.* The ordinance exemption provided herein shall not be applicable to building permits for the following:

(a) Construction of a new residential home, multiple-family dwelling or commercial building on previously vacant and undeveloped property.

(b) Construction of a new residential home, multiple-family dwelling or commercial building on property where a home, multiple-family dwelling or commercial building previously existed and was demolished.

(c) Construction of additions to existing residential homes, multiple-family dwellings or commercial buildings, whether by new construction, or by renovation or the rebuilding of a portion of a partially demolished structure previously existing on the property, when the proposed addition is equal to, or exceeds, the size of the remaining portion of the structure that exists on the property.

(d) Any construction or development that amends, extends, or revises the legal description of the property being improved.

(e) Any construction or development on any property that has been created contemporaneously with, or subsequent to, the enactment of this section by the improper, unauthorized or illegal subdivision of a previously existing homesite or group of homesites, multiple-family dwelling or dwellings, commercial building or buildings.

(f) Construction on any property that has been newly created by excavation or filling.

(g) Construction on any property that has been newly created by the elimination of a body of water that previously existed thereon.

(4) *Caveat.* The exemption provided by this section is only intended to be applicable to the City Code of Ordinances platting requirement therein.

(C) Nonconforming homesite exemption from variance requirement. Existing single family residential homesite properties that have previously been permitted to be developed on platted or unplatted lots, or portions of lots, that fail to meet the City's minimum requirements for lot width, depth or total area, shall not be required to secure a variance for any such existing nonconformity as a condition of securing a building permit for any otherwise authorized and code compliant improvements to the existing property or the structures thereon.

(Code 1962, § 25-29; amend. Ord. 184, passed 2-8-54; amend. Ord. 340, passed 11-22-65; amend. Ord. 599-77, passed 3-28-77; amend. Ord. 781-91, passed 6-24-91; amend. Ord. 1026-2011, passed 9-12-11)

ARTICLE XII. BOARD OF ADJUSTMENT

Sec. 150-110. Created; appointment; terms; vacancy; rules and regulations; records; meetings; alternate member; scheduling of meetings; filing of applications; secretarial assistance; decisions of Board.

(A) There is created and established a Board of Adjustment which shall consist of five regular members appointed by the Mayor and Councilmembers for staggered three-year terms. Members shall be qualified electors of the City. Upon the expiration of a Board member's term, the City Council member making the original appointment, or that City Council member's successor in office, shall appoint the Board member to serve during the new Board term. If for any reason, an appointment should not be made to fill an expired term, the incumbent will continue to serve until his successor has been appointed.

(B) In the event of the death or resignation of a member or his failure to attend any three meetings within a 12-month period, a successor shall be appointed to fill the unexpired term by the Councilmember making the original appointment. In the event the original Councilmember is no longer in office, his successor shall fill the unexpired term.

(C) The Board of Adjustment shall prescribe and adopt rules and regulations for proceedings hereunder.

(1) Meetings of the Board shall be open to the public.

(2) The Board of Adjustment shall keep minutes of its proceedings showing the vote of each member upon each question or, if absent or failing to vote, indicating such fact, and shall keep records of its proceedings and other official actions, all of which shall be immediately filed in the office of the Board and shall be a public record.

(D) All consultant or support services to be furnished to the Board must be requested from and approved by the City Council or their designee prior to the services being secured.

(E) An additional member shall be appointed to the Board and designated as the "alternate member," who shall be appointed by the Mayor and Councilmembers in the same manner as regular Board members are appointed, with the Mayor having the first appointment, and so on, as noted in division (A) above. The alternate member shall be required to attend all Board meetings and shall be subject to the same appointment, terms, and vacancy provisions as are regular Board members.

(1) In the temporary absence or disability of a regular member, or in an instance where a regular member is otherwise disqualified to sit on a particular matter, the alternate member shall sit as a Board member to obtain a full membership, or, as nearly as possible, a full membership. When so acting, the alternate member shall have full rights of participation and voting as regular members; his vote shall be deemed that of a member in reaching a decision on a matter.

(2) In instances where the alternate member is not sitting as a member, he shall have the right to participate in Board discussions and to ask questions, but shall have no right to vote or make motions. When the alternate member has been required to sit as a member on a particular matter the alternate shall continue to sit as a Board member through the disposition of the matter; and he shall not be replaced until the hearing on the matter is concluded.

(F) The Board of Adjustment meets on the first Monday of every month on a regular basis. Emergency meetings can be called by action of the Mayor, Chairman of the Board, any City Council person, or the City Manager.

(G) To permit the City staff sufficient time for review, research, posting, citizen notification, and other preparation that may be required, all applications to the Board must be received by the first day of the month for the application to be scheduled for hearing before the Board at its next regular meeting to be held on the first Monday of the following month. All applications received after the first day of the month shall be scheduled for hearing before the Board at succeeding monthly regular meetings. However, any Board application may be scheduled at an earlier Board meeting than provided herein, if the director of building and zoning and the City Manager determine that the City staff has sufficient time to prepare the application for hearing, that an expedited hearing will not prejudice the rights or interests of any party involved in the application, and that permitting the application to be heard on an expedited basis will be in the best interests of the City.

(H) The City Building and Zoning Department shall furnish all required secretarial assistance to the Board.

(1) Regardless of the number of Board members actually present at any meeting, all decisions of the Board must be passed by a majority of the entire Board.

(Code 1962, § 25-32; amend. Ord. 184, passed 2-8-54; amend. Ord. 723-87, passed 6-29-87; amend. Ord. 765-90, passed 6-25-90; amend. Ord. 852-99, 6-14-99; amend. Ord. 910-04, passed 3-22-04)

Sec. 150-111. Appeals from administrative decision and denial of request for variance.

(A) When there are practical difficulties or unnecessary hardships in the way of carrying out the strict letter of this chapter, appeals to the Board may be taken by any person aggrieved, or by and department of the governing body of the City, affected by any decision of the administrative official. In its determination of what shall constitute such hardship as to warrant relief on appeal, the Board shall not be bound by financial considerations affecting the appellant.

(B) The Board shall have the following duties and powers:

(1) To hear and decide appeals where it is alleged there is error in any order, requirement, decision, or determination made by the administrative official in the enforcement of this chapter.

(2) To authorize upon appeal in specific cases the variance from the terms of this chapter as will not be contrary to the public interest where, owing to special conditions, a literal enforcement of the provision of the chapter will result in unnecessary hardship, and so that the spirit of the chapter shall be observed and substantial justice done.

(3) In exercising the powers set forth in divisions (1) and (2), the Board shall act on all matters upon a majority vote of the entire Board, a majority of the Board being necessary for a quorum, but less than a quorum may adjourn to a specific time. The Board may reverse or affirm any requirement, decision, or determination appealed from, and may make such order, requirement, decision, or determination as ought to be made, and to that end, shall have all the powers of the official from whom the appeal is taken.

(4) In considering all proposed variations to this chapter, the Board shall, before making any findings in a specific case, first determine that the proposed variation will not constitute any change in the districts shown on the zoning map, and will not impair an adequate supply of light and air to adjacent property, or materially increase the danger of fire, or materially diminish or impair established property values within the surrounding area, or in any other respect impair the public health, safety, morals, and general welfare of the City.

(5) Any variance granted either by the Board of Adjustment or by the City Council shall be null and void if the applicant does not obtain a building permit and commence construction within one year of the date of the granting of the variance. If unusual circumstances exist, and the applicant applies to the

Board of Adjustment or the City Council, whichever granted the variance, for an extension, the variance may be extended by the Board or the council for an additional six-month period. No extensions beyond the time periods specified above are authorized.

(6) Following the denial of an application for a variance by the City Board of Adjustment, no variance relief may be filed with the City and heard by the Board of Adjustment until after six months have elapsed from the date of the Board's denial.

(C) The Chairman of the Board will advise all applicants that the Board's recommendation will be considered by the City Council, which will make a decision on the application. The Chairman of the Board will instruct all applicants that, if they wish to appeal, they must file a Notice of Appeal with the City Clerk within ten business days of the Council's decision. All appeals must be accompanied by the payment of an appropriate fee, which shall be established from time to time by City Council Resolution and included within the "Schedule of Charges" maintained and utilized by the City Building Department, and which amount shall pay the cost of all additional notices, posting and other preparations.

(Code 1962, § 25-33; amend. Ord. 184, passed 2-8-54; amend. Ord. 599-77, passed 3-28-77; amend. Ord. 724-87, passed 6-29-87; amend. Ord. 762-90, passed 6-11-90; amend. Ord. 964-08, passed 1-28-08; amend. Ord. 1092-2017, passed 8-14-17)

Sec. 150-112. Board of Adjustment variance application fee and other required submittals.

(A) No application to the Board of Adjustment shall be considered unless the applicant shall have first paid a fee to the City Finance Department of an appropriate amount which shall be established from time to time by City Council Resolution and included within the "Schedule of Charges" maintained and utilized by the City Building Department, required to cover the cost of making the investigations necessary to a consideration of the matter, the mailing of notices, and the preparation of documents for the building inspector, as may be considered sufficient to facilitate the proper consideration of the application by the Board.

(B) At or before the time of the hearing, the applicant shall also submit a recent survey of the property in question showing the boundary lines, together with the boundaries of the proposed additions, for which the variance is applied for. In the event the building inspector deems it reasonably necessary to a proper consideration of the application, he may require the applicant to furnish, in addition to the above matters, a photograph measuring eight inches by ten inches of the property in question.

(Code 1962, § 25-33.1; amend. Ord. 184, passed 2-8-54; amend. Ord. 184.30, passed 2-27-61; amend. Ord. 437, passed 11-11-69; amend. Ord. 599-77, passed 3-28-77; amend. Ord. 964-08, passed 1-28-08)

Sec. 150-113. Review of Zoning and Planning Board and Board of Adjustment recommendations by City Council; appeal procedures.

(A) *Intent.* All decisions of the Zoning and Planning Board and Board of Adjustment are recommendations for action by the City Council. All such Board decisions must be affirmed by City Council motion prior to becoming final. In addition, no other provision or procedure set forth in the Code of Ordinances shall in any manner restrict or interfere with the power of the City Council to set aside, annul, or modify any decision of the Board of Adjustment or Zoning and Planning Board.

(B) *Review and appellate procedure.* The following are the procedures to be followed in the review and appeal from recommendations of the Zoning and Planning Board and Board of Adjustment.

(1) Following the meetings of the Zoning and Planning Board and Board of Adjustment conducted on the first Monday of every month, the recommendations of the Boards shall be reviewed and/or appealed in accordance with the following procedures:

(a) All case recommendations of the Zoning and Planning Board shall be separately reviewed, as a matter of right, by the City Council at a regular or special City Council meeting following the determination of the City planner and City Manager that any such case is ready for presentation to the City Council for final review.

(b) All case recommendations of the Board of Adjustment shall be reviewed at the next regular City Council meeting following the rendering of any such case recommendations by the Board.

(i) At this time, the City Council shall either affirm the case recommendation of the Board by motion, or any City Council member may request a further meeting to be conducted on any board recommendation before the City Council, sitting as a board of appeals, on the last Wednesday of each month, which request shall be voted upon and may be granted upon an affirmative majority vote of the City Council.

(ii) The motion to affirm the case recommendation of the Board of Adjustment shall constitute final City Council action on each case unless an Appellant, as defined herein, files a written "notice of appeal", accompanied by the appropriate appellate administrative fee (which shall be established from time to time by motion of the City Council) with the City Clerk within ten business days following the rendering of any case decision by the City Council.

For purposes of appeals before the City Council acting as the Board of Appeals, an "Appellant" shall be defined as:

any property owner of record within a 500-foot radius of a residential property that is the subject of an application;

any property owner of record on the same block as a residential property that is the subject of an application but who is not within the 500-foot radius of the subject property; or

for appeals of a non-residential property that is the subject of an application, any property owner of record within the City limits.

(iii) The appellate administrative fee shall, however, not be required when a further meeting is approved as part of the City Council review process as provided in a subsection (i) above.

(iv) Upon the receipt of any appropriate "notice of appeal" and appellate administrative fee for any board case, the City Clerk shall notify the City Planning Department and City Manager of the need to schedule a board of appeals meeting on the last Wednesday of the month. However, if no such "notice of appeal" is received within the required time on any board case which has been previously affirmed by City Council motion, then all such case decisions shall be final.

(v) Notice of all board of appeals meetings shall be provided in the same manner as other board meetings of the City. However, the City planning department shall provide the applicant, the appellant, and all attorneys, representatives and other interested parties with adequate notice of the meeting in accord with § 150-114.5, so that sufficient opportunity is provided to prepare appropriate presentations for the board of appeals meetings.

(vi) Notwithstanding the foregoing, the City Council retains the sole and exclusive discretion regarding the scheduling of appeals of Board of Adjustment case recommendations before the board of appeals.

(c) Further appeals from any final decisions of the City Council in regard to any case recommendations of the Zoning and Planning Board or Board of Adjustment shall be maintained in accordance with the applicable appellate rules and procedures established by the laws of the State of Florida.

(Code 1962, § 25-33.2; amend. Ord. 599-77, passed 3-28-77; amend. Ord. 861-2000, 2-14-00; amend. Ord. 910-04, passed 3-22-04; amend. Ord. 1092-2017, passed 8-14-17)

Sec. 150-114. Amendments; hearing; notice.

(A) Upon recommendation from the City Zoning and Planning Board, or on its own motion, the City Council may, from time to time, amend, supplement, change, or repeal the regulations, restrictions, or district boundaries set out in this chapter in accordance with § 1.04(3)(a), (b), and (c) of the City Charter.

(B) Notwithstanding any other provisions contained in this Code, the City Manager or the City Council may impose building and zoning moratoria in accordance with the procedures herein established.

(Code 1962, § 25-35; amend. Ord. 184, passed 2-8-54; amend. Ord. 552, passed 11-26-73; amend. Ord. 599-77, passed 3-28-77)

Sec. 150-114.5. Notification of public hearings.

(A) Except where modified by specialized procedures elsewhere in the Code, all variance requests shall be considered at public hearings, which shall be noticed as follows:

(1) *Adjoining owners.* At least ten days before the public hearing, the City shall send notices of the proposed variance to the property owners of record within a 500-foot radius of a residential property or a 1,000-foot radius of a non-residential property which is the subject of the application. Such notices shall include the date, time and place of the public hearing before the Board of Adjustment, along with a clear and concise description of the proposed variance. Distances for purposes of mailed notice requirements shall be measured from the perimeter of the property subject to development approval, except that where the owner of the subject property owns contiguous property, the distance shall be measured from the perimeter of the boundary of the contiguous property. This subsection shall not be construed to mean that notice must be provided to property owners located outside of the City's boundaries.

(2) *Public advertisement.* Notice of public hearing shall be published in a newspaper of general circulation within the City at least 15 days prior to the hearing, with a second publication to be at least five days prior to the hearing. Notice shall also be posted in a conspicuous location at the City Hall, and may be posted at other public locations at the discretion of the City.

(3) *Applicant bears burden of cost.* All costs of publication, mailing and posting shall be borne by the applicant.

(4) *Re-noticing.* All costs of re-noticing the public hearing shall be borne by the party failing to comply with the applicable notice requirements, requesting the deferral or continuance, or whose actions are responsible for the deferral or continuance which may require re-noticing of the hearing. Continuances to a date certain, announced at the originally noticed meeting, shall not require re-notice of the new public hearing date. Continuances to unspecified dates or substantive changes to an application request during the period an application has been continued, shall require re-noticing for the new public hearing date.

(Ord. 1092-2017, passed 8-14-17)

Sec. 150-115. Enforcement; violations.

(A) The building inspector and code enforcement officer are designated and authorized to enforce this chapter under the direction of the City Manager.

(B) Any person violating any of the provisions of this chapter shall be guilty of an offense against the City. The owner of any buildings or premises or part thereof, where anything in violation of this chapter shall be placed, or shall exist, and any architect, builder, contractor, agent, or person employed in connection therewith, and who may have assisted in the commission of any violation, shall be guilty of a separate offense.

(C) Any person, firm, or corporation who violates, disobeys, omits, neglects, or refuses to comply with or who resists the enforcement of any of the provisions of this chapter shall be punished as provided in § 10-99. Each day that a violation is permitted to exist shall constitute a separate offense.

(Code 1962, § 25-36) Ord. 184, passed 2-8-54; amend. Ord. 352, passed 4-25-66; amend. Ord. 599-77, passed 3-28-77)

Sec. 150-116. Administrative building moratoria.

(A) Whenever it shall be made to appear to the City Manager that it is in the public interest to make a comprehensive determination as to whether existing zoning districts applying to a portion of the area of the City are appropriate, and it is further made to appear to him that the existing zoning districts may be detrimental to the area should they continue to remain applicable, and building permits be issued predicated thereon, notwithstanding any other provision to the contrary, the City Manager shall immediately instruct the City Clerk to call an emergency meeting of the City Council within 12 hours to consider the imposition of a moratorium, and the City Manager shall further instruct the City Clerk to post public notice of the meeting in an appropriate place in the recreation center, the field house, the public library, and, unless otherwise forbidden, in a conspicuous place in the United States Post Office in the City, and in such other locations as the council may direct, and to advise the news media of the meeting. If a majority of the council members present at the meeting concur in the determination of the City Manager, then they shall be resolution delineate the area in question, and prohibit the issuance of building permits thereon. If a meeting of the City Council cannot be called because a quorum of the City Council, as defined in the Charter and Code of the City, cannot be present at the meeting, or if the meeting is called and a quorum of the City Council is not present at the scheduled time and place, then the City Manager may immediately issue his administrative order delineating the area in question, and prohibiting the issuance of building permits thereon. The City Manager's determination shall be predicated on a consideration of the comprehensive plan, and shall be designed to lessen congestion in the streets; to secure safety from fire, panic, and other dangers; to promote health and the general welfare; to provide adequate light and air; to prevent the overcrowding of land; to avoid undue concentration of population; to facilitate the adequate provision of transportation, water, sewerage, schools, parks, and other public requirements; and with reasonable consideration, among other things, to the character of the district and its peculiar suitability for particular uses, and with a view to conserving the value of buildings and encouraging the most appropriate use of land throughout the City.

(B) Any resolution or administrative order issued pursuant to division (A) shall be complied with by all City personnel, and shall be effective until reversed, modified, or superseded by order of the City Council.

(C) Immediately upon issuance of any resolution or administrative order pursuant to division (A), the City Manager shall notify the City Clerk, whose duty it shall be to place the matter before the City Council for consideration and review following a public hearing as soon as is reasonably practicable.

(D) The clerk shall give reasonable notice by publication in a newspaper of general circulation in the City of the public hearing which he has scheduled before the City Council.

(E) At the public hearing, the City Council shall inquire into the propriety of a building moratorium, and may reverse, modify, or supersede any moratorium order previously issued. The council's determination shall be predicated upon the reasonable necessity for a detailed comprehensive analysis of the area in question, and the probability of detriment to the character of the area by the continued application of the existing zoning districts.

(F) Should the City Council determine that a building moratorium is reasonably necessary, it shall order the same, and direct that no building permits be issued within the affected area. The council's order shall fix a time within which the City Manager shall report back to council with his recommendations relating to appropriate zoning districts for the affected area. the time limitation shall be a reasonable one, predicated upon the time needed for a comprehensive analysis of the area. The initial council moratorium shall be for a period not to exceed 120 days. The council on its own motion or otherwise may continue any moratorium for a longer period of time, if reasonably necessary. This provision is supplemental to division (G) hereof.

(G) Should the City Manager be unable to report back to the council within the time period prescribed by its moratorium order, upon timely request by the City Manager, and after public hearing on the need therefor, the council may reasonably extend the time limitation. The City Manager shall submit his report to the City Council and the Zoning and Planning Board. The Zoning and Planning Board shall make its findings and recommendations after public hearing to the City Council.

(H) Upon the submission of the Zoning and Planning Board findings and recommendations to the City Council the City Clerk shall follow all public hearings as required in § 1-04(3)(a),(b), and (c) of the City Charter. After the public hearing, the council shall make its determination as to whether the zoning district shall remain the same or shall be changed. Should the council determine that the zoning districts shall remain the same, it shall immediately issue its order terminating the building moratorium. Should the council determine that the applicable zoning districts should be changed, or new districts created therefor, or special exceptions, variances, conditional use permits, and the like, altered or revoked, it shall issue its order continuing the building moratorium, and shall immediately take the actions required to accomplish the same.

(I) Upon the completion of all zoning district changes relating to the affected area, the City Council shall issue its order terminating the building moratorium.

(J) If any planning study performed by City officials or employees or a specially hired or appointed City agency indicated the necessity for zoning changes, the provisions of §§ 150-116—150-119 may be utilized to restrict the issuance of building permits until the changes have been finally considered by the City Council.

(Code 1962, § 25-37; amend. Ord. 552, passed 11-26-73; amend. Ord. 599-77, passed 3-28-77)

Sec. 150-117. Other building moratoria.

(A) Should any person make written application to the City Manager for the issuance of an administrative order provided by § 150-116(A), and the City Manager refuses to issue the order or fails to take action thereon within 15 days, the person may make written application to the City Council for the issuance of a building moratorium by the council. Application to the council shall be filed with the City Clerk, whose duty it shall be to place the matter before the City Council as soon as is reasonably practicable for the council's determination as to whether a public hearing shall be called thereon. The City Manager shall be notified by the clerk of the date that the matter is to be considered by the council. The word *PERSON* as used in this division includes, but is not limited to, any individual, firm, corporation, and governmental entity.

(B) Should the council determine that a public hearing should be held as to whether a building moratorium is appropriate, it shall call the same as called for in § 1-04(3)(a), (b), and (c) of the City Charter.

(C) The procedure to be followed for this section, after the completion of the steps provided in division (A) and (B) above, is that set forth in § 150-116(E) through (I) of this Code.

(Code 1962, § 25-38; amend. Ord. 552, passed 11-26-83; amend. Ord. 599-77, passed 3-28-77)

Sec. 150-118. Exceptions.

Notwithstanding the issuance of any moratorium order, the City Manager may authorize the issuance of building permits for nondeleterious items including, but not limited to, fences, repairs, and the like matters, if he determines that the permit will not affect the outcome of the planning study, and the items are not subject to the approval of any other board or agency of the City.

(Code 1962, § 25-39; amend. Ord. 552, passed 11-26-73)

Sec. 150-119. Variances, special exceptions, and zoning changes.

During the existence of any building moratorium, no applications for variances, special exceptions, or zoning district changes, minimum square footage requirement changes, unusual and new uses, modifications or elimination of conditions, or restrictions or limitations within the affected area shall be acted upon by any City agency, except as provided in § 150-116.

(Code 1962, § 25-40; amend. Ord. 552, passed 11-26-73)

Sec. 150-120. Administrative zoning moratoria.

(A) Whenever it shall be made to appear to the City Manager that it is in the public interest to make a comprehensive determination as to whether the existing zoning map or partial master plans on file or hereafter to be prepared and adopted, and all future adopted master plans for the City (hereinafter referred to as the "City master plan"), as it applies to a portion of the area of the City, is outdated, and of little or no use in formulating correct zoning patterns in relation thereto, or as to whether existing zoning districts are compatible with existing or proposed growth patterns and land uses, notwithstanding any other provisions to the contrary, the City Manager shall immediately instruct the City Clerk to call an emergency meeting of the City Council within 12 hours to consider the imposition of a moratorium, and the City Manager shall further instruct the City Clerk to post public notice of the meeting as provided by § 150-116(A). If a majority of the councilmen present at the meeting concur in the determination of the City Manager then they shall by resolution delineate the area in question, and prohibit the consideration by a City department, board, or agency of any zoning amendment, modification, variance, special exception, or other zoning change, in the area. If a meeting of the City Council cannot be called because a quorum of the City Council, as defined in the Charter and this Code, cannot be present at the meeting, or if the meeting is called, and a quorum of the City Council is not present at the scheduled time and place, then the City Manager may immediately issue his administrative order delineating the area in question, and prohibiting the consideration by any City department, board, or agency of any zoning amendment, modification, variance, special exception, or other zoning change in the area. The City Manager's determination shall be predicated on a consideration of the comprehensive plan, and shall be designed to lessen congestion in the streets; to secure safety from fire, panic, and other dangers; to promote health and the general welfare; to provide adequate light and air; to prevent the overcrowding of land; to avoid undue concentration of population; to facilitate the adequate provision of transportation, water, sewerage, schools, parks, and other public requirements; and with reasonable consideration, among other things, to the character of the district, and its peculiar suitability for particular uses, and with a view to conserving the value of buildings and encouraging the most appropriate use of land throughout the City.

(B) Any resolution or administrative order issued pursuant to division (A) shall be complied with by all City departments, boards, and agencies, and shall be effective until reversed, modified, and superseded by order of the City Council.

(C) Immediately upon issuance of any resolution or administrative order pursuant to division (A), the City Manager shall notify the City Clerk, whose duty it shall be to place the matter before the City Council for consideration and review following a public hearing as soon as is practicable, ten days after publication once in a newspaper of general circulation in the City of the public hearing which he has scheduled before the City Council.

(D) At the public hearing, the City Council shall inquire into the propriety of the zoning moratorium, and may reverse, modify, or supersede the zoning moratorium order previously issued. The council's determination shall be predicated upon the need for a detailed and comprehensive analysis of the area in question which would enable the council to correct any deficiencies in the master plan or to provide any changes necessary or desirable in the master plan.

(E) Should the City Council determine that a zoning moratorium pending the preparation of a detailed and comprehensive analysis of the area in question is necessary or desirable, it shall order the continuance of the City Manager's zoning moratorium order. The council's order shall fix a time within which the City Manager shall report back to the council with his recommendations in relation to modifying or correcting the City master plan as to the affected area. The time limitation shall be a reasonable one predicated upon the time needed for a comprehensive analysis of the area by the City Manager, and all planning agencies of the City.

(F) Upon the submission of the City Manager's report and recommendations to the City Clerk, the clerk shall call a public hearing thereon before the City Council at the earliest practicable time, after reasonable notice as provided by § 150-116(A). After the public hearing, the council shall either amend the master plan and terminate the zoning moratorium order, or, if it finds no amendment in order or necessary, terminate the zoning moratorium.

(Code 1962, § 25-41; amend. Ord. 552, passed 11-26-73)

Sec. 150-121. Other zoning moratoria.

(A) Should any person make written application to the City Manager for the issuance of an administrative order as provided by § 150-120(A), and the City Manager refuses to issue the order or fails to take action thereon within 15 days, the person may make direct application in writing to the City Council for the issuance of a zoning moratorium order. The application to the council shall be filed by the City Clerk, whose duty it shall be to place the matter before the City Council as soon as is reasonably practicable for the council's determination as to whether a public hearing should be called thereon. The word *PERSON* as used in this division includes, but is not limited to, any individual, firm, corporation, or governmental entity.

(B) Should the council determine that a public hearing should be held on whether a zoning moratorium is appropriate, it shall call the same for the earliest practicable date and give ten days notice by the publication once in a newspaper of general circulation in the City as provided in § 150-116(A). Pending the public hearing, the council may issue an order prohibiting the consideration by any City department, board, or agency of any zoning amendment, modification, variance, special exception, or other zoning change in the area.

(C) The procedure to be followed for this section, after the completion of the steps provided in divisions (A) and (B) above, is that set forth in § 150-120.

(Code 1962, § 25-32; amend. Ord. 552, passed 11-26-73)

Sec. 151-08. Zoning ordinance.

Before any permit is issued, all provisions of Chapter 150, Zoning Code, and any amendments thereto shall be complied with, and the provisions of the building code shall not be construed to repeal, supersede, or modify any part of Chapter 150, or amendments thereto.

(Code 1962, § 7-10; Ord. 224.1, passed 5-26-58)

Search

Building Permit Application

The completion and submission of a Building Permit Application is a requirement of securing a City Building Permit.

The City will rely upon the information contained in the Application in determining whether a City Building Permit should be issued. The submission of inaccurate, misleading or misrepresented information in the Application shall subject the Building Permit to denial, suspension or revocation, and the individual applying for the Permit, to all appropriate fines, penalties and other punishments authorized by law.

KINDLY GOVERN YOURSELF ACCORDINGLY

Supporting Documents

Owner-Builder Form
240.07 KB

Permit Application 2022
184.25 KB

Contact Information

Phone Number

(305)805-5030

Email

Contact Group

Address

City Hall Building Department Second Floor
201 Westward Drive
Miami Springs, FL 33166

Board Information



Sec. 150-025. Awnings and canopies in all zoning districts.

All awnings and canopies placed upon, attached to, or forming any part of any building in any zoning district of the City shall conform to the following conditions and restrictions.

(A) *Approval.* No permit for the erection or replacement, in whole or in part, of any awning or canopy shall be issued without the approval of the City Building and Zoning Department. Prior to the issuance of any permit or approval, the building and zoning department may, in its discretion, require the submission of plans, specifications, drawings, designs, diagrams, or any other pertinent information or documentation regarding the erection or placement of the requested awning or canopy.

(B) *Materials for awnings and canopies.*

(1) Awnings or canopies placed upon, attached to, or forming any part of any building in any area zoned for single-family residential or duplex use shall be made of canvas, cloth, or other similar materials, or of fiberglass, aluminum, or other manmade materials.

(2) Awnings or canopies placed upon, attached to, or forming any part of any building in any area zoned other than single-family residential or duplex shall be made of canvas, cloth, or other similar materials or of fiberglass, plastic, or nonferrous metals, but in no case shall any such awning or canopy be made of wood or wood products or of masonite or similar materials. In all cases, such awnings or canopies shall generally simulate the appearance of canvas awnings, and must not be corrugated or slatted or with holds or other interstices.

(3) Illuminated awnings or canopies shall not be permitted in any zoning district of the City.

(C) *Slope.* No canopy shall be erected which has a minimum slope of less than two inches in 12 inches, or a maximum slope of more than five inches in 12 inches.

(D) *Horizontal area—Residential.* No canopy shall be erected which covers a total horizontal area greater than 450 square feet in the residentially zoned districts of the City.

(E) *Horizontal area—Business/commercial.* No canopy shall be erected which covers a total horizontal area greater than 750 square feet in the business/commercial districts of the City.

(F) *Clearance over sidewalk.* In any district other than a single-family residential or duplex district where an awning or canopy is placed upon, attached to, or forming any part of any building, and such awning or canopy projects over a sidewalk, or similar place where the public is accustomed to walk, the rigid or metal parts for any such awning or canopy shall have a clearance of not less than seven feet-six inches from sidewalk elevations, and any nonrigid valance of any such awning or canopy shall have a clearance of not less than six-and-one-half feet from sidewalk elevation. No awnings or canopies shall be allowed to project over a sidewalk or other public right-of-way in any single-family residential or duplex district of the City.

(G) *Construction.*

(1) All awnings or canopies of cloth, canvas, or other similar materials shall be so constructed as to permit quick removal such as is necessary in cases of impending storms or hurricanes.

(2) Except for those installations which are stationary in character, awnings or canopies other than those of cloth or canvas or other similar materials shall be so constructed in a manner to easily allow them to convert to storm shutters or storm protection for the building to which they are attached.

(3) Rigid awnings or canopies which are stationary in character shall be designed to resist the following loads.

(a) Roofs shall be designed for a live load of not less than 30 pounds per square foot except that roofs occupied as roof gardens or for concentrated loads shall be designated for corresponding occupancies.

(b) Design shall not be based on the removal or repositioning of parts or the whole during periods of high wind velocity.

(H) *Location of awnings.*

(1) Single-family residential and duplex zoned districts.

(a) All window and door awnings shall be attached to the building.

(b) The awnings may be located on the front, side, or rear of said building, and may extend into required setback areas.

(2) All other zoned areas.

(a) All window and door awnings shall be attached to the building.

(b) The awnings may be located on the front, side or rear of the building.

(I) *Maintenance, repair, replacement and/or removal.*

(1) All awnings and canopies shall be maintained in good order and repair. Awnings and canopies which are found, upon inspection, to be in disrepair shall be subject to removal and replacement.

(2) The City, from time to time, shall require that an inspection be made of all awnings and canopies encroaching upon public rights-of-way, and in all cases where said inspection reveals that such awnings and canopies are in need of repair and replacement, such awnings and canopies shall be declared to be a public nuisance and the Code Enforcement Officer shall so notify the owner of record of the property described by registered or certified mail, as their names and addresses are shown upon the record of the County Property Appraiser. Such notice shall be deemed complete and sufficient when so addressed and deposited in the United States mail with proper postage prepaid. In the event that such notice is returned by postal authorities, the Code Enforcement Officer shall cause a copy of the notice to be served by a Law Enforcement Officer upon the occupant of the property or upon any agent of the owner of record thereof. The notice shall be in substantially the following form.

"NOTICE OF PUBLIC NUISANCE

Name of Owner of Record:
Address of Owner of Record:

According to our records, you are the owner of Lot(s) _____, Block _____, Section _____, Address:

An inspection of the above-noted property reveals that the (awning and/or canopy) encroaching upon the public right-of-way is/are in such disrepair as to constitute a public nuisance.

This is to serve as official notice that unless you:

1. Repair the existing (awning and/or canopy);

2. Replace the existing (awning and/or canopy);

3. Remove the existing (awning and/or canopy); within a period of 30 days after mailing the notice, or the serving of notice upon the occupant of the property or any agent of the owner thereof, and/or the condition described in the notice has not been remedied, the

Code Enforcement Officer may have such (awning and/or canopy) removed and the cost thereof shall be a lien against the property to the same extent and character as are liens for special assessments or improvements and with the same penalties and the same rights of collection, foreclosure, sale, and forfeiture as obtained in the case of liens for special improvements.

CITY OF MIAMI SPRINGS, FLORIDA

By:
Code Enforcement Officer"

(J) *Manufacturer's identification.* All awnings and canopies constructed or erected pursuant to the provisions of this section shall have the manufacturer's identification shown thereon and noted on the permit.

(K) *Encroachment over public right-of-way.* Awnings and canopies which encroach over the public right-of-way shall be subject to the following conditions and restrictions:

(1) The property owner shall provide public liability insurance coverage for the encroachment in the minimum limits required by the City, and naming the City as additional insured under the policy.

(2) A certificate of required insurance shall be presented to the building official prior to the issuance of any permits for such work.

(3) Notwithstanding the above, prior to the issuance of any permit for the installation of any awning or canopy encroaching over any public right-of-way under the jurisdiction of the Florida Department of Transportation, the Building Official shall require such evidence as in his opinion is reasonable to show that the plans for such encroachment have been approved by the said Department of Transportation.

(L) *Permit fees.* Permit fees for the erection or replacement of any awning or canopy as provided in the foregoing shall be in accordance with the current fee for same, which fee shall be shown as part of the schedule of building permit fees for the City in accordance with provisions of § 151-07.

(M) *Carports and other roofed open structure.* Carports and other roofed open structures shall be permitted on single-story structures located in the residential zoning districts of the City in accordance with the following conditions and restrictions.

(1) The facia board of all carports and other roofed open structures shall be affixed to the facia board of the main structures to which they are attached at the same level.

(2) All carports and other roofed open structures shall conform to the design, character, height and scale of the main structures to which they are attached.

(3) Each carport and other roofed open structure located in the front yard area shall be required to provide a full hip roof if the main structure to which it is attached has an existing full hip roof.

(4) The construction and location of all carports and other roofed open structures shall be in compliance with all other appropriate provisions of this Code.

(N) *Self-supporting and free-standing canopies in the residential districts of the City.*

(1) Self-supporting and free-standing canopies shall be permitted in the single-family residential zoning districts of the City in accordance with the following rules and regulations.

(2) Portable or temporary self-supporting and free-standing canopies shall not require permanent anchoring to the ground or an approved cement slab and shall be capable of being completely disassembled and stored within a period of three hours.

(a) Such canopies shall not require permitting prior to placement.

(b) No such canopies shall be permitted to be located in the front yard area of any single-family residential property.

(c) Such canopies may not be placed or located closer than five feet from any side or rear property line of any single-family residential property.

(3) Permanent self-supporting and free-standing canopies shall be required to be anchored to the ground, an approved cement slab, or other permanent support structure authorized and approved by the City Building Department.

(a) The installation of such canopies shall require proper permitting and inspection by the City Building Department.

(b) No such canopies shall be permitted to be located in the front yard area of any single-family residential property.

(c) Such canopies may not be permanently installed within the required side or rear yard setback areas of any single-family residential property.

(Ord. 704-85, passed 6-24-85; amend. Ord. 756-89, passed 12-11-89; amend. Ord. 790-92, passed 5-11-92; amend. Ord. 971-08, passed 10-13-08; amend. Ord. 974-09, passed 2-9-09; amend. Ord. 1033-2012, passed 4-9-12)

Sec. 150-047. Front yard setback usage exceptions.

(A) *Intent.* It is the intent of this section to provide limited and qualified circumstances in which existing and developed residential homesites may be permitted to encroach into their existing front yard setbacks for the specific purpose of constructing attached additions to existing residential structures.

(B) *Requirements for applicability.* This section will only be applicable to existing and developed residential homesites that meet all of the following requirements:

(1) The homesite parcel is legally nonconforming because it lacks the required minimum average width of 75 feet.

(2) The location or footprint of the existing homesite on the subject parcel of property prohibits or significantly restricts the construction of attached additions to the structure in the rear yard area of the homesite.

(3) The existing and established front yard setback of the homesite parcel exceeds 45 feet.

(4) The existing residential structure is the original structure constructed on the property.

(5) The original construction of the residential structure on the property was prior to the Comprehensive Zoning Code Ordinance Revision of 1977.

(C) *Limitations on applicability.* The exception provided by this section may only be utilized for the following limited circumstances:

(1) The construction of an attached addition to the front of any existing residential structure that meets the requirements of subsection (B) of this section.

(2) The proposed addition and homesite only require the exception provided by this section for the requested construction and all other setbacks on the property, whether or not currently in compliance with the Code, will not be further extended or enlarged as a consequence and requirement of the construction of the proposed addition.

(3) The homesite, by the usage, utilization and implementation of the exception provided by this section, will be prohibited from seeking variance relief in the future for any proposed rear yard project or usage that is not in strict compliance with the Code of Ordinances.

(D) *Front yard setback exception.* Any homesite, and the existing residential structure thereon, which meets the requirements for applicability set forth in subsection (B) herein, and the limitations on applicability set forth in subsection (C) herein, shall be permitted to construct an approved attached addition to the existing structure in the existing and established front yard setback of the homesite so long as such construction is otherwise in compliance with the requirements of the Code of Ordinances and establishes a new front yard setback of no less than 30 feet.

(E) *Exception limitations.* The usage, utilization and implementation of the exception provided by this section shall impose the following limitations:

(1) The provisions contained in this section are to be strictly construed and are specifically not subject to variance.

(2) Any property owner who utilizes the provisions of this exception section and any property owner adjacent to any homesite property that utilizes the provisions of this exception section shall not be permitted to consider the vertical line of the new addition as the new front yard setback of the subject property for the interpretation or implementation of any other Code of Ordinance provisions.

(Ord. 919-04, passed 12-13-04)

ARTICLE IV. ADMINISTRATION

Sec. 154-45. Chief building official; duties and responsibilities.

(A) The chief building official is hereby appointed to administer and implement the provisions of this chapter.

(B) The duties of the chief building official shall include, but not be limited to:

(1) Review all development permits to assure that the permit requirements of this chapter have been satisfied.

(2) Advise permittee that additional federal or state permits may be required, and if specific federal or state permit requirements are known, require that copies of such permits be provided and maintained on file with the development permit.

(3) Notify adjacent communities and the Florida department of community affairs and the South Florida water management district prior to any alteration or relocation of a watercourse, and submit evidence of such notification to the federal emergency management agency.

(4) Assure that maintenance is provided within the altered or relocated portion of that watercourse so that the flood-carrying capacity is not diminished.

(5) Verify and record the actual elevation (in relation to mean sea level) of the lowest floor (including basement) of all new or substantially improved buildings as required herein.

(6) Verify and record the actual elevation (in relation to mean sea level) to which the new or substantially improved buildings have been flood-proofed, in accordance with the requirements of this chapter.

(7) When flood-proofing is utilized for a particular building, the chief building official shall obtain certification from a registered professional engineer or architect in accordance with the requirements of this chapter.

(8) Where interpretation is needed as to the exact location of boundaries of the areas of special flood hazard (for example, where there appears to be a conflict between a mapped boundary and actual field conditions) the chief building official shall make the necessary interpretation. The person contesting the location of the boundary shall be given a reasonable opportunity to appeal the interpretation as provided in this chapter.

(9) When base flood election data or floodway data have not been provided in accordance with the requirements of this chapter, then the chief building official shall obtain, review and reasonably utilize any base flood elevation and floodway data available from a federal, state or other source, in order to administer the provisions of this chapter.

(10) All records pertaining to the provisions of this chapter shall be maintained in the office of the chief building official and shall be open for public inspection.

(Ord. 800-92, passed 11-23-92)

Sec. 154-46. Variance procedures.

(A) The Board of Adjustment, as established by the City, shall hear and decide appeals and requests for variances from the requirements of this chapter.

(B) The Board of Adjustment shall hear and decide appeals when it is alleged there is an error in any requirement, decision or determination made by the chief building official in the enforcement or administration of this chapter.

(C) Any person aggrieved by the decision of the Board of Adjustment or any other person may appeal such decision to the City Board of Appeals and thereafter to the Dade County Circuit Court, by common law writ of certiorari, as provided in the Florida appellate rules.

(D) Variances may be issued for the repair or rehabilitation of historic structures (see § 154-02) upon a determination that the proposed repair or rehabilitation will not preclude the structure's continued designation as an historic structure and the variance is the minimum to preserve the historic character and design of the structure.

(E) In passing upon such applications, the Board of Adjustment shall consider all technical evaluations, all relevant factors and all standards specified in other sections of this chapter, and:

(1) The danger that materials may be swept onto other lands to the injury of others;

(2) The danger to life and property due to flooding or erosion damage;

(3) The susceptibility of the proposed facility and its contents to flood damage and the effect of such damage on the individual owner;

(4) The importance of the services provided by the proposed facility to the community;

(5) The necessity of the facility to a waterfront location, in the case of a functionally dependent facility;

(6) The availability of alternative locations, not subject to flooding or erosion damage, for the proposed use;

(7) The compatibility of the proposed use with existing and anticipated development;

(8) The relationship of the proposed use to the comprehensive plan and floodplain management program for that area;

(9) The safety of access to the property in times of flood for ordinary and emergency vehicles;

(10) The expected heights, velocity, duration, rate of rise and sediment transport of the flood waters and effects of wave action, if applicable, expected at the site; and

(11) The costs of providing governmental services during and after flood conditions including maintenance and repair of public utilities and facilities such as sewer, gas, electrical and water systems, and streets and bridges.

(F) Upon consideration of the factors listed in division (E)(1) through (11) of this section, and the purposes of this chapter, the Board of Adjustment may attach such conditions to the granting of variances as it deems necessary to further the purposes of this chapter.

(G) Variances shall not be issued within any designated floodway if any increase in flood levels during the base flood discharge would result.

(1) Variances shall only be issued upon a determination that the variance is the minimum necessary, considering the flood hazard, to afford relief; and in the instance of a historical building, a

determination that the variance is the minimum necessary so as not to destroy the historic character and design of the building;

(2) Variances shall only be issued upon a showing of good and sufficient cause; a determination that failure to grant the variance would result in exceptional hardship; and a determination that the granting of a variance will not result in increased flood heights, additional threats to public safety, extraordinary public expenses, create a nuisance, cause fraud on or victimization of the public or conflict with existing local laws or ordinances.

(3) Any applicant to whom a variance is granted shall be given written notice specifying the difference between the base flood elevation and the elevation to which the building is to be built and stating that the cost of flood insurance will be commensurate with the increased risk resulting from the reduced lowest floor elevation.

(4) The chief building official shall maintain the records of all appeal actions and report any variances to the federal emergency management agency upon request.

(Ord. 800-92, passed 11-23-92)

Sec. 154-99. Penalty.

Violations of the provisions of this chapter or failure to comply with any of its requirements, including violation of conditions and safeguards established in connection with grants of variance or special exceptions, shall constitute a misdemeanor. Any person who violates this chapter or fails to comply with any of its requirements shall, upon conviction thereof, be fined not more than $500.00 or imprisoned for not more than 60 days, or both; and in addition, shall pay all costs and expenses involved in the case. Each day such violation continues shall be considered a separate offense. Nothing herein contained shall prevent the City from taking such other lawful actions as is necessary to prevent or remedy any violation.

(Ord. 800-92, passed 11-23-92)

ZONING ORDINANCE

NO. 184

TOWN OF MIAMI SPRINGS
FLORIDA

Prepared By:

D. O. McGOON
and
E. A. ANDERSON

ZONING ORDINANCE NO. 184

I N D E X

SECTION 1	PURPOSE AND AUTHORITY	P. 1
SECTION 2	DEFINITIONS	P. 2-6
SECTION 3	OFFICIAL DISTRICT ZONING MAP	P. 7-8
SECTION 4	GENERAL PROVISIONS	P. 9-14
SECTION 5	PUBLIC PROPERTY DISTRICT, P.	P. 15
SECTION 6	SINGLE FAMILY DISTRICT - REA (1600 Sq. Ft. Floor Area)	P. 16-17
SECTION 7	SINGLE FAMILY DISTRICT - R-E (1200 Sq. Ft. Floor Area)	P. 18-19
SECTION 8	SINGLE FAMILY DISTRICT - R-1AA (900 Sq. Ft. Floor Area)	P. 20-21
SECTION 9	SINGLE FAMILY DISTRICT - R-1A (800 Sq. Ft. Floor Area)	P. 22
SECTION 10	MULTIPLE FAMILY DISTRICT - R-2 AA (750 Sq. Ft. Floor Area/ Family)	P. 23-25
SECTION 11	MULTIPLE FAMILY DISTRICT - R-2 (450 Sq. Ft. Floor Area/Family)	P. 26-28
SECTION 12	LOCAL RETAIL BUSINESS DISTRICT - C-1A (1500 Sq. Ft. Floor Area)	P. 29-31
SECTION 13	LIMITED COMMERCIAL DISTRICT - C-1 (1500 Sq. Ft. Floor Area)	P. 32-33
SECTION 14	NON-CONFORMING USES	P. 34
SECTION 15	ZONING AND PLANNING BOARD	P. 35
SECTION 16	BOARD OF ADJUSTMENT	P. 36-37
SECTION 17	INTERPRETATION, PURPOSE AND CONFLICT	P. 38
SECTION 18	AMENDMENTS AND CHANGES	P. 39
SECTION 19	ENFORCEMENTS, VIOLATIONS AND PENALTIES	P. 40
SECTION 20	VALIDITY	P. 41

SUBJECT REFERENCES

ALCOHOLIC BEVERAGES	P. 9
APPROACH ZONE	P. 9
CONSTRUCTION MATERIALS	P. 10
FENCES, LANDSCAPING AND BOUNDARY WALLS	P. 10
PLANS AND SURVEYS	P. 10
PLATS	P. 11-12
SIGNS	P. 13-14-15
OFF-STREET PARKING - RESIDENTIAL (Space 8x20 & Ingress and Egress)	P. 17
OFF-STREET PARKING - MULTIPLE FAMILY, CHURCHES, HOSPITALS, HOTELS,etc.	P. 25,27 & 28
OFF-STREET PARKING - COMMERCIAL	P. 31, 33

ZONING ORDINANCE NO. 184

AN ORDINANCE ESTABLISHING AND CONTINUING A ZONING PLAN WITHIN THE TOWN OF MIAMI SPRINGS AND REPEALING ORDINANCES SO FAR AS THEY ARE INCONSISTENT WITH THIS ORDINANCE

BE IT ORDAINED BY TOWN OF MIAMI SPRINGS:

SECTION 1

PURPOSE and AUTHORITY

A. The Town of Miami Springs is hereby divided into zones as is hereinafter more particularly set forth and as further appears upon the map of said Town of Miami Springs, which shows such zones and which map is hereto attached as the Zoning Map of the Town; and there is hereby adopted and established a comprehensive zoning plan for the Town of Miami Springs for the purpose of accomplishing, among other things, the objects outlined in the Town charter and the following purposes: In consideration, among other things, of lessening congestion in the streets, regulating traffic, securing safety from fire, storm, panic and other dangers; conserving or providing adequate light and air; establishing, maintaining or preserving aesthetic values; preventing the overcrowding of land, avoiding the undue concentration of population or facilitating the furnishing or operation of facilities for transportation, water, sewage, schools, parks and other public improvements or conveniences; to regulate and restrict the location, height, number of stories, size, cubic contents, construction and area of buildings and other structures, (including billboards and advertising devices); the percentage and portion of lots and land that may be occupied or built on; the size of yards, courts, or other open spaces; the density of population; the use of buildings, structures and land for trade, industries, residences, apartment houses and all or any other purposes; the platting, replatting, resubdividing, and use of unplatted lands; for any of the above said purposes, in promoting the safety, health, comfort, morals, convenience, peace, prosperity, appearances, or general welfare of the Town or its inhabitants, to divide the Town into zones of such number, shapes, and areas as may be deemed best suited to effectuate the purposes of this section, and within such zones to regulate and restrict the erection, construction, reconstruction, alteration, repair, destruction, or removal of buildings, land, or structures, including billboards and signs; all in accordance with a comprehensive plan, there is hereby adopted and established an official zoning plan for the Town of Miami Springs.

B. This plan is adopted pursuant to the authority conferred upon the Town of Miami Springs by its Charter and the Laws of Florida.

SECTION 2

DEFINITIONS

GENERAL DEFINITIONS: For the purpose of this Ordinance, certain terms and words are hereby defined, and these following definitions shall apply in the enforcement of the regulations herein; the terms Board of Adjustment, Zoning and Planning Board, Mayor, Council, Town Council, Town Clerk, and Building Inspector shall mean such authorities, bodies, or authorized representatives of the Town of Miami Springs; the word Town shall, in all instances, mean the Town of Miami Springs, a municipal corporation of the State of Florida; all words used in the present tense include the future; the word 'shall' is mandatory and not directory; and the verb 'use' shall include cause to be used, permit to be used, or arrange, design, or intend to be used or occupied.

ACCESSORY BUILDING: A subordinate building in a rear yard, detached from the main building and on the same premises as an existing main building, the use of which is clearly incidental and pertaining to that of the dominant use of the main building or land. An accessory use is one which is incidental to the main use of the premises.

ACCESSORY STRUCTURE: Any structure not forming an integral part of the main building, but pertaining to and incidental to the use of the main building or land.

ALLEY: A dedicated way not ordinarily used for general traffic, which affords a secondary means of access for service to property abutting thereon.

APARTMENT HOUSE: See "Dwelling, Multiple".

BOARDING HOUSE: A building other than a hotel where, for compensation pursuant to previous arrangement, meals or lodging and meals are provided for three (3) or more persons, not members of the household.

BUILDING: Any structure designed or built for the support, enclosure, shelter, or protection of persons, animals, chattels, or property of any kind.

BUILDING, HEIGHT OF: The vertical distance from the grade to the highest point of the coping of a flat roof or to the deck line of a mansard roof, or to the mean height level between eaves and ridge for gable, hip, and gambrel roofs.

BUILDING SITE: Premises upon which a building is to be located, consisting of a lot or contiguous lots plus portions of lots, but in no case less than one

complete unit of platted land.

SPACE: A space, other than a yard, on the same lot as a building which space is open, unobstructed, and unoccupied except for trees, shrubs, fountains, statuary, walks, and ways.

DISTRICT: Any section or area of the Town of Miami Springs so identified and delineated on the Official District Zoning Map of the Town, for which the zoning regulations governing the use of buildings and premises, the height of buildings, the size of yards, and the intensity of use are uniform.

(R) District: Any single or multiple family residential district.

(C) District: Any business or commercial district.

(P) District: Any district composed of lands dedicated to the use of the public, and lands owned or controlled by a Federal, State, County, or Municipal body or board for public purpose.

DWELLING: Any building or portion thereof which is designed for or used for residential purposes.

DWELLING, SINGLE FAMILY: A building designed for or occupied exclusively by one (1) family.

DWELLING, MULTIPLE: A building designed for or occupied exclusively by two (2) or more families.

FAMILY: One or more persons occupying a dwelling and living as a single housekeeping unit, as distinguished from a group occupying a boarding house, lodging house, or hotel, as herein defined.

FLOOR AREA: The area enclosed within the outside perimeter of a building, less one half (½) the area of any attached garage, car-port, or porch.

GARAGE, STORAGE: A building or portion thereof designed or used exclusively for term storage, and at which motor fuels and oils are not sold, and motor-driven vehicles are not equipped, repaired, hired, or sold.

GRADE: That certain elevation established by the Dade County Engineer's Office for any given area in the Town, and shown on the official map of the Town of Miami Springs, entitled "Minimum Fill Elevations" and dated October 30, 1950 which map is on file in the office of the Town Clerk.

GUEST HOUSE: An accessory building located on the same lot as the main building, not occupied the year round, and used exclusively for the accommodations of guests of the occupant or owner of the main building.

HOTEL: A building in which lodging or boarding and lodging are provided and offered to the public for compensation, and in which ingress and egress to and from all rooms is made through one inside lobby or foyer which is normally supervised by a person at all hours.

LODGING HOUSE: A building other than a Hotel where lodging for three (3) or more persons, not members of the household, is provided for compensation pursuant to arrangement.

LOT: A unit of platted land with frontage on a street.

MAIN BUILDING: Any building, permitted under this Ordinance, that is not an accessory building.

MASONRY CONSTRUCTION: Construction in which all exterior walls from foundation to roof are of masonry and/or reinforced concrete, poured in place. Interior partitions, floor and roof framing may be of wood. Wood trim may be added to exterior when properly affixed to masonry, but not in substitution therefor or to take the place of masonry walls.

MOTOR COURT OR MOTEL: A building or a group of buildings on the same lot, usually arranged around a court, containing sleeping accommodations, but no facilities for cooking, and having ingress and egress to the rooms other than through an inside lobby or foyer, in contradistinction to a hotel.

NON-CONFORMING USE: The use of a building or portion thereof, or land or portion thereof, which use does not conform with the use regulations of the district in which it is situated.

PARKING, OFFSTREET: Parking spaces entirely on the premises and not extending into streets, alleys, or other public ways.

PARKING SPACE: An area of not less than eight (8) feet by twenty (20) feet per vehicle, exclusive of driveway for ingress and egress.

PLATTED LAND: Any land, a diagram of which has been recorded by plat in the Dade County Circuit Court Clerk's Office.

PREMISES: Any lot, plot, parcel, or tract of land which is or may, under the terms of this ordinance, be occupied or used as the location of a structure.

SUBDIVIDED: Redivided, and/or any premises platted or unplatted being divided into smaller parcels of land to be used as lots or individual building sites.

SERVANTS' QUARTERS: An accessory residential building designed to be occupied by not more than two (2) employees of the occupant of the main building. Such quarters shall not include kitchen, or cooking and eating facilities.

SIGN: Any display of characters, letters, illustrations, or any ornamentation designed as an advertisement, announcement, or to indicate direction or location.

STREET: A public thoroughfare which affords the principal means of access to abutting property.

STRUCTURE: Anything constructed or erected, the use of which requires more or less permanent location on the ground, or attached to something having a permanent location on the ground, including but without limiting the generality of the foregoing: advertising signs, billboards, back stops for tennis courts, fences, walls and pergolas.

STRUCTURAL ALTERATIONS: Any change in the supporting members of a building, such as bearing walls or partitions, columns, beams or girders, or any substantial change in the roof or in the exterior walls, excepting such repair or replacement as may be required for the safety of the building.

UNPLATTED LAND: Any land that is not depicted by plat recorded in the Dade County Circuit Court Clerk's Office.

VEHICLE: A conveyance for persons or material.

YARD: Any open space between a building and the adjacent lot lines, unoccupied and unobstructed by any portion of a structure from the ground upward, except as otherwise provided herein. In measuring a yard for the purpose of determining the width of a side yard, or the depth of a front yard, or the depth of a rear yard, the minimum horizontal distance between the lot line and the nearest part of the main building shall be used.

YARD, FRONT: A yard extending across the front of a lot and being the minimum horizontal distance between the front lot line and the nearest part of the main

building, other than the usual uncovered steps, or stoops. On corner lots the front yard shall be considered as adjacent to the street upon which the lot has its least dimension.

YARD, REAR: A yard extending across the rear of a lot and being the required minimum horizontal distance between the rear lot line and the rear of the nearest part of the main building, other than uncovered steps, unenclosed balconies, or unenclosed porches. On all lots, the rear yard shall be that portion opposite and most distant from the front yard.

YARD, SIDE: A yard between the main building and the side line of the lot, and extending from the required front yard to the required rear yard, and being the minimum horizontal distance between a side lot line and the side of the nearest part of the main building.

SECTION 3

OFFICIAL DISTRICT ZONING MAP

A. The Town of Miami Springs in its entirety, is hereby divided into districts. These districts and the boundaries thereof are shown on a map accompanying this ordinance and, by reference, made a part thereof; said map being designated as "Official District Zoning Map of the Town of Miami Springs", and the said map shall be signed by the Mayor and by the Chairman of the Zoning and Planning Board and attested by the Town Clerk.

B. The Town Clerk shall have custody of this map as a public record and he shall record or have recorded thereon all subsequent amendments thereto.

C. The boundaries of such districts as are shown on this map are hereby adopted and approved, and the regulations of this ordinance, as hereinafter set forth, are hereby established and declared to be in effect upon all the land included within the boundaries of each and every district shown upon said map.

D. This said map and all the notations, references and other information shown thereon shall be as much a part of this ordinance as if such information set forth on such map were all fully described and set out herein.

E. Where uncertainty exists as to boundaries of any district shown on said map the following rules shall apply:

1. Where such district boundaries are indicated as approximately following street lines, alley lines or lot lines, such lines shall be construed to be such boundaries;
2. In unsubdivided property or where a district boundary divides a lot, the location of such boundary, unless the same is indicated by dimensions, shall be determined by use of the scale appearing on the map;
3. In case any further uncertainty exists, the Council shall interpret the intent of the map as to location of such boundaries, after having received the recommendations of the Zoning and Planning Board.
4. Where any public street or alley is hereafter properly and officially vacated or abandoned, the regulations applicable to each parcel of abutting property shall apply to that portion of such street or alley added thereto by virtue of such vacation or abandonment until action has been taken to amend the Official District Zoning Map.

5. Should any area appear to be not included in any District or should any area be annexed by the Town of Miami Springs, such area shall be the highest District nearest thereto (excluding District "P", Public Property District") and the use shall be the use permitted in such most restricted District, so that there will be no doubt that all the area within the limits of the Town of Miami Springs shall be zoned.

SECTION 4

GENERAL PROVISIONS

1. ALCOHOLIC BEVERAGES: In any District within three hundred (300) feet of any 'R' District, or within five hundred (500) feet of any church or public school, no premises shall be used for, nor shall any use or occupancy permit, the sale of liquor, beer, wine, or other alcoholic, vinous or malt beverages to be consumed on the premises, except that hotels of fifty (50) rooms or more may provide such service for guests when accessible to patrons thereof only from the main entrance and main lobby of the hotel and no activity connected therewith is visible from a street or other public way. These distances shall be measured in a direct air line between the nearest point on the bounary of the premises involved and the nearest point on the bounary of said district, school or church premises.

2. ANIMALS: No animals, livestock or poultry of any kind shall be raised, bred or kept in any structure or on any lot within the Town of Miami Springs, except that not more than three (3) dogs, cats or other strictly household pets over six weeks of age may be kept, provided they are not kept, bred or maintained for any commercial purpose.

3. APPROACH ZONE: Approach zone to the North-South runway at the Miami International Airport, a "Non Instrument" Runway.

1. For any proposed building which falls within the "Approach Zone" as shown on the official district zoning map, it will be necessary to obtain written approval from the Civil Aeronautics Administration before a building permit therefor shall be issued as follows:

a. Any proposed building or structure within 200 feet of the North right-of-way line of N. W. 36th Street.

b. Any proposed building or structure exceeding 25 feet in height within 2,000 feet of the North right-of-way line of N.W. 36th Street.

c. Any proposed building or structure exceeding 75 feet in height.

4. BUILDING PERMITS AND OCCUPANCY PERMITS:

1. No structure shall be erected, added to or altered without a Building Permit.

2. No Building Permit for the erection, addition or alteration of a building shall be issued before an application has been made and the proposed use approved for a certificate of occupancy.

3. A Certificate of Occupancy will be issued within two working days after final inspection of the work when completed in accordance with lawful requirements, and it shall state that the new use or occupancy complies with the provision of this ordinance.

4. There shall be no change in the use or occupancy of land or existing buildings, nor shall any new building or addition to a building be occupied until a Certificate of Occupancy covering such use has been issued by the Building Inspector.

E. CONSTRUCTION MATERIALS: All buildings shall be of masonry construction as defined herein. Roofs, when exposed to view, shall be of tile. All other roofs shall be surfaced with a fire resistant material.

F. FIRST FLOOR ELEVATIONS:

1. For wooden floors, the first floor elevation shall be established so that the bottom of the floor joists are at least 18 inches above grade.
2. For poured concrete floors, the first floor elevation shall be established so that the finished elevation is at least 9 inches above grade.

G. FENCES, LANDSCAPING AND BOUNDARY WALLS:

1. No fence, wall or planting over three and one-half ($3\frac{1}{2}$) feet in height above established grade shall be permitted in any (R) District within twenty (20) feet of a corner, or street intersection.
2. No fence, hedge or boundary wall over three and one-half ($3\frac{1}{2}$) feet in height shall be permitted within five (5) feet of the boundary of any front yard.
3. No fence, hedge, screening or boundary wall in excess of five (5) feet in height shall be permitted in any (R) District or within five (5) feet of the boundary of any (R) District.

H. PLANS AND SURVEYS:

1. Each application for a Building Permit shall be accompanied by a plan or plat drawn to scale showing actual dimensions of the lot to be built upon, the size, shape and location of the building to be erected, the size, shape and location of any existing building on the lot, and such other information as may be necessary to provide for the enforcement of this Ordinance.
2. After pouring of the footing and prior to further construction, a Plat of Survey, prepared by a Registered Land Surveyor of the State of Florida,

shall be supplied to the Building Inspector for all main buildings, indicating the exact location of the building on the lot or building site.

I. PLATS:

1. From and after the passage of this ordinance, it shall be unlawful to subdivide any property within the Town of Miami Springs, or to open, grade, or improve any streets, therein, or to erect, have constructed or cause to be constructed any residence or other structure on any unplatted land, until a plat of said proposed subdivision shall have first been approved by the Zoning and Planning Board and the Town Council of said Town.

2. No such plat or replat shall be approved until the following requirements have been met:

   a. A TENTATIVE PLAT to be approved by the Zoning and Planning Board showing all lots, streets, and alleys, together with their dimensions, as well as connecting adjoining streets and the elevation of the land in said subdivision to be expressed in feet above Mean Sea Level (United States Coast and Geodetic Survey datum). The said elevations may be shown as contours at one foot intervals.

   b. A FINAL PLAT of record to be approved by the Zoning and Planning Board and the Town Council of said Town, which plat shall comply with the existing State plat laws and shall show, wherever required, the limits of areas thereof to be filled together with the elevation of such fills.

      The elevation of fills, wherever required, shall be as established by the Dade County Engineer's Office and as shown on the official map of the Town of Miami Springs dated October 30, 1950, and on file in the office of the Town Clerk, the said map being made by reference, a part of this Ordinance.

   c. All persons, firms, and corporations submitting plats to the Town Council for approval shall accompany such plat with an agreement providing for the paving of the streets, the construction of the sidewalks, drainage structures, and the installation of adequate watermains, fire hydrants, street lighting and such other improvements as the Council deems necessary in said subdivision, which installation shall be in accordance with the specifications as set forth by the Town Council. The said agreement shall be accompanied by a surety

bond in the penal sum of not less than 110% of the estimated cost of such construction. Such agreement shall be approved by the Town Council and the Town Clerk. The condition of this bond shall be such that the principal shall fully and faithfully perform all the terms and conditions of the principal's agreement and within the time specified therein and shall be released by the Town upon satisfactory completion of the work specified in the agreement as evidenced by written certification by the Town Engineer including certification that the elevations of all pavements, sidewalks and fills comply with the provisions of this Ordinance.

This agreement shall stipulate such time limits as the Town Council shall require for the various installations specified therein.

d. Any such plat or replat shall include properly dedicated alleys in the rear of the lots shown on such plat or replat, which alleys shall not be less than 16 feet in width, and in such alleys there shall be provided returns having 25 foot radii to permit free ingress and egress, where the alleys intersect other alleys, to permit vehicles to pass in and out without encroaching on adjoining property.

e. All building sites and lots in residential districts shall have a minimum width of seventy-five (75) feet and a minimum depth of one hundred (100) feet, and all building sites or lots in commercial or business districts shall have a minimum width of twenty-five (25) feet and a minimum depth of one hundred (100) Feet. The purpose and intent of this paragraph is to prevent the reduction in size of lots and tracts, or parcels of land from being redivided to parcels of less than the minimum required herein. It is not intended to prevent lots in existence at the time of passage of this ordinance, being increased in size or width even though such increase does not reach the prescribed minimum.

J. PROHIBITED USES: Except as hereinafter provided:

1. It shall be unlawful to erect, have constructed, or cause to be constructed, any structure, and/or to use or permit the use of any structure or land which does not comply with the regulations established by this

ORD. 184

Ordinance for the district in which the structure is located.

2. No building, except one single family residence and permitted customary accessory structures, shall be erected on any one platted lot in any R-EA, R-E, R1AA or R-1A Single Family District. (Also see Plats).

3. No residence shall be constructed within three hundred (300) feet, measured in the most direct line, from another residence having such similar design, contour, exterior lines, floor plan and size, so as to be or appear alike.

I. SIGNS:

1. For the purpose of this Ordinance, all signs are hereby divided into three (3) classes as follows:

   a. Class A Sign.

      A temporary sign advertising the rental or sale of, or construction being done on, the premises whereon it is located, and not exceeding two (2) feet by two (2) feet in overall size.

   b. Class B Sign.

      Any sign advertising to the public the legal or exact firm name of business or activity operated on the premises, or for advertising any service or product actually offered for sale on the premises, and not exceeding thirty (30) square feet in area.

   c. Class C Sign.

      Any billboard or any sign of a greater size or used for purposes other than those described in Class A or Class B above.

2. Building Permits for Signs.

   All Class B and Class C signs shall be considered structures within the meaning of this Ordinance and shall require a Building Permit.

3. Prohibitions.

   a. No sign shall be so located as to constitute a hazard.

   b. No permit shall be issued for any advertising matter which would conflict with the regulations for the zone in which it is located.

   c. No sign shall be placed on any property, unless the applicant has written consent of the owner and/or lessee of the property.

   d. No sign shall exhibit thereon any lewd, lascivious, indecent or immoral matter.

   e. No sign shall be attached to trees, utility poles or any other unapproved supporting structure.

f. No sign, where a permit is necessary, shall be exhibited, unless the required permit fees are paid.

g. Fence and wall signs shall be prohibited in residential zones.

h. On all corner intersections, no portion of any sign which exceeds four (4) feet in height which does not provide an eight (8) foot clearance between the bottom of the sign and grade shall be placed within fifteen (15) feet of any official right-of-way line.

4. Maintenance

a. Where the rear of any sign is visible from a street, waterway, park or residence, or from any R District, the exposed structural members of such sign shall be either concealed by painted lattice work, plants or be suitably painted or decorated, and such back screening shall be designed, painted, and maintained to the satisfaction of the Zoning and Planning Board.

b. The owners of each sign shall be responsible for keeping the weeds cut from the area in front of and between the sign and the nearest highway or waterway, and within a radius of fifty (50) feet of all signs not attached to buildings.

c. The Building Inspector may cause to be removed any billboard or advertising sign which shows neglect or becomes dilapidated or where the area around such sign is not maintained as provided herein after thirty days notice has been given in writing.

5. Responsibility.

The owner and/or tenant of the premises, and the owner and/or erector of the sign shall be held responsible for any violation of these regulations.

6. Construction Requirements.

All signs shall conform to structural requirements of the Building and/or Electrical Code or other applicable technical codes.

SECTION 5

PUBLIC PROPERTY DISTRICT, P.

A. USES PERMITTED:

1. Any lawful use authorized by the owning or controlling Federal, State, County or Municipal governing body or board, except such uses as the Town Council upon recommendation of the Zoning and Planning Board may from time to time declare to be not in the public interest or obnoxious or detrimental to the health or welfare of the residents of the Town. However, no property owner abutting public property shall have the right of exclusive use of any of such public property for uses such as the storage of implements, vehicles or materials except that he may plant trees and/or beautify the parkways upon approval of the Town Clerk.

B. PUBLIC UTILITIES: It shall be unlawful to install, extend, or maintain any utility in this district until written approval has been obtained from the Building Inspector. The Building Inspector shall use the current Dade County requirements applying to such installation, extensions and maintenance as a guide insofar as they are applicable.

C. SIGNS: No signs or advertising matter on trees, poles, garbage cans, benches or other articles or places shall be permitted in this district, except those erected by the municipality or other governing body, for traffic regulation, direction or similar public purpose. Signs on an abutting building in a Commercial District and attached flat to the building may extend the thickness of the material but not more than one (1) foot beyond its face. Overhanging or suspended signs shall not be permitted.

D. PARKING: Where alleys or other public ways are deemed in excess of the needs of traffic, portions thereof not needed for easy access, may be set aside for public parking of vehicles as may be prescribed by order of the Town Council.

SECTION 6

SINGLE FAMILY DISTRICT - R6A

A. USES PERMITTED

1. One (Single) family dwelling; in no case shall there be more than one (1) main building on a lot.

2. Accessory structures and uses incidental to such single family dwelling when placed on the same lot or parcel of land and not used or operated commercially, including: private garage, children's playhouse; tool shed; work shop; servant's quarters. No accessory building shall be located closer than five (5) feet to any boundary line of the premises. Such accessory structures shall occupy not more than fifteen (15%) percent of the area of the rear yard, and shall conform in design, construction and character to that of the main building.

3. No signs or advertising shall be permitted except one (1) Class "A" sign indicating that the property is for sale.

B. BUILDING HEIGHT LIMIT:

The maximum building height shall be two and one-half (2½) stories or thirty-five (35) feet.

C. BUILDING SITE AREA REQUIRED: The minimum building site area shall be one lot or a parcel of land ten thousand (10,000) square feet in area for each one (single) family dwelling. Such parcels shall have an average width of at least seventy-five (75) feet. Where a lot or parcel of land has an area of less than the above required minimum and was of record at the time of the passage of this ordinance, said lot may be occupied by one family; provided, however, that the minimum front, side, and rear yard requirements set out in this section are conformed to.

D. FRONT YARD REQUIRED: There shall be a front yard of a depth of not less than thirty (30) feet, unless the average depth of the front yard of the lot or lots next adjacent thereto on either side is less than thirty (30) feet, in which case, the front yard shall be the average depth of the front yard of the lot or lots next adjacent thereto on either side. In case there is no dwelling on the block, the depth of the front yard shall be a minimum of thirty (30) feet. The maximum depth of front yard permitted shall be not more than fifty (50) percent of the depth of the lot or building site.

E. SIDE YARD REQUIRED: There shall be side yards, the width of each to be not less than ten (10%) percent of the average width of the lot but in no case shall each side yard be less than five (5) feet, except that for corner lots the side yard adjoining the street shall be not less than fifteen (15) feet.

F. REAR YARD REQUIRED: There shall be a rear yard not less than twenty-five (25) feet in depth.

G. FLOOR AREA REQUIREMENT: The minimum floor areas of dwellings in this district shall be eighteen hundred (1800) square feet.

H. OFF-STREET PARKING: Whenever a dwelling unit is erected or reconstructed, there shall be provided one off-street parking space for such dwelling unit. This space shall not be located within the minimum front or side yards.

SECTION 7

SINGLE FAMILY DISTRICT, R-E

A. USES PERMITTED:

1. One (single) Family dwelling in no case shall there be more than one (1) main building on a lot.
2. Accessory structures and uses incidental to such single family dwelling the same as in District R-EA.
3. No signs or advertising shall be permitted except one (1) Class "A" sign.

B. BUILDING HEIGHT LIMIT: The maximum building height shall be two and one-half (2½) stories or thirty-five (35) feet.

C. BUILDING SITE AREA REQUIRED: The minimum building site area shall be one lot or parcel of land seven thousand, five hundred (7,500) square feet in area for each one (single) family dwelling. Such parcels or lots shall have an average width of at least seventy-five (75) feet. Where a lot or parcel of land has an area of an average width less than the above required minimum and was of record at the time of the passage of this ordinance, said lot may be occupied by one family, provided, however, that the minimum side, front and rear yard requirements set out in this section are conformed to.

D. FRONT YARD REQUIRED: There shall be a front yard of a depth of not less than thirty (30) feet, unless the average depth of the front yard of the lot or lots next adjacent thereto on either side is less than thirty (30) feet, in which case the front yard shall be the average depth of the front yard of the lot or lots adjacent thereto on either side. In case there is no dwelling on the block, the depth of the front yard shall be the minimum of thirty (30) feet. The maximum depth of front yard permitted shall be not more than fifty (50) percent of the depth of the lot, or building site.

E. SIDE YARD REQUIRED: There shall be side yards, the width of each to be not less than ten (10%) percent of the average width of the lot but in no case shall each side yard be less than five (5) feet, except that for corner lots the side yard adjoining the street shall be not less than fifteen (15) feet.

F. REAR YARD REQUIRED: There shall be a rear yard not less than twenty-five (25) feet in depth.

E. FLOOR AREA REQUIREMENTS: The minimum floor areas of dwellings in this district shall be twelve hundred (1200) square feet.

F. OFF-STREET PARKING: Off-Street parking shall be provided as required in District R-4A.

SECTION 8

SINGLE FAMILY DISTRICT, R-1AA

A. USES PERMITTED:

1. One (single) family dwelling; in no case shall there be more than one (1) main building on a lot.
2. Accessory structures and uses incidental to such single family dwelling the same as in District R-EA.
3. No signs or advertising shall be permitted except one (1) Class "A" sign.

B. BUILDING HEIGHT LIMIT: The maximum building height shall be two and one-half (2½) stories or thirty-five (35) feet.

C. BUILDING SITE AREA REQUIRED: The minimum building site area shall be one lot or parcel of land six thousand (6000) square feet in area for each one (single) family dwelling. Such parcels or lots shall have an average width of at least seventy-five (75) feet. Where a lot or parcel of land has an area or an average width less than the above required minimum and was of record at the time of the passage of this ordinance, said lot may be occupied by one family, provided, however, that the minimum side, front and rear yard requirements set out in this section are conformed to.

D. FRONT YARD REQUIRED: There shall be a front yard of a depth of not less than thirty (30) feet, unless the average depth of the front yard, of the lot or lots next adjacent thereto on either side is less than thirty (30) feet, in which case the front yard shall be the average depth of the front yard of the lot or lots next adjacent thereto on either side. In case there is no dwelling on the block, the depth of the front yard shall be a minimum of thirty (30) feet. The maximum depth of front yard permitted shall be not more than fifty (50) percent of the depth of the lot or building site.

E. SIDE YARD REQUIRED: There shall be side yards, the width of each to be not less than ten (10%) percent of the average width of the lot but in no case shall each side yard be less than five (5) feet, except that for corner lots, the side yard adjoining the street shall be not less than fifteen (15) feet.

F. REAR YARD REQUIRED: There shall be a rear yard not less than twenty-five (25) feet in depth.

G. FLOOR AREA REQUIREMENTS: The minimum floor areas of dwellings in this district shall be nine hundred (900) square feet.

H. OFF-STREET PARKING: Off-Street parking shall be provided as required in District R-RA.

SECTION 9

SINGLE FAMILY DISTRICT, R-1A

A. USES PERMITTED:

1. Any use permitted in the R-1 AA.
2. No signs or advertising shall be permitted except one (1) Class A sign.

B. BUILDING HEIGHT LIMIT: The maximum building height shall be two and one-half (2½) stories or thirty-five (35) feet.

C. BUILDING SITE AREA REQUIRED: The minimum building site area in the R-1A district shall be one lot or parcel of land five thousand (5,000) square feet in area for each one (single) family dwelling. Such parcels or lots shall have an average width of at least seventy-five (75) feet. Where a lot or parcel of land has an average width less than the above required minimum and was of record at the time of the passage of this ordinance, said lot may be occupied by one family, provided, however, that the minimum side, front and rear yard requirements set out in this section are conformed with.

D. FRONT YARD REQUIRED: There shall be a front yard of a depth of not less than thirty (30) feet, unless the average depth of the front yard of the lot or lots next adjacent thereto on either side is less than thirty (30) feet, in which case, the front yard shall be the average depth of the front yard of the lot or lots next adjacent thereto on either side. In case there is no dwelling on the block, the depth of the front yard shall be a minimum of thirty (30) feet. The maximum depth of front yard permitted shall be not more than fifty (50) percent of the depth of the lot, or building site.

E. SIDE YARD REQUIRED: There shall be side yards, the width of each to be not less than ten (10%) percent of the average width of the lot but in no case shall each side yard be less than five (5) feet, except that for corner lots the side yard adjoining the street shall be not less than (10) feet.

F. REAR YARD REQUIRED: There shall be a rear yard not less than twenty-five (25) feet in depth.

G. FLOOR AREA REQUIREMENT: The minimum floor areas of dwelling in this district shall be eight hundred (800) square feet.

SECTION 10

MULTIPLE FAMILY DISTRICT, R-2 AA

A. USES PERMITTED:

1. Any use permitted in the R-EA District, and conforming to the regulations for that District.

2. Multiple family dwelling, apartment house, group houses or court apartments.

3. Hotels, provided that where food and/or beverages of any kind are sold, or shops or other service utilities or facilities are made available, such facilities shall be located and conducted entirely within said hotel building in such manner that no sign advertisement or other appearance or indication of the existence of such service facility, nor any activity of whatsoever nature connected therewith shall be visible at any time or in any manner from any public street, avenue, walk or other public way, and such service facility shall not be accessible to patrons thereof directly from a public street or way, nor indirectly, by means of any vestibule, foyer, entryway or room, unless such entryway is accessible only from the main entrance and main lobby of the hotel, as such entrance or lobby has been designated on plans for the construction or alteration of said hotel building filed with and approved by the Building Inspector; and provided, further, that such service facility may be accessible to patrons thereof from a patio, yard, court or other open area adjoining the hotel building where such area is enclosed on the side or sides abutting or visible from any public street or other public way by an opaque wall containing no facilities for entrance into such open area from the exterior of the wall; and provided, further, that the Council may revoke the license or permit of any person, firm or corporation violating this provision.

4. Accessory buildings and structures customarily incident to any of the above uses, when occupying not more than fifteen (15%) percent of the required rear yard, and located on the same lot and not involving the conduct of business. No accessory building shall be located closer than

five (5) feet to any boundary line of the premises and shall conform in design, construction and character to that of the main building.

6. Parking areas to provide off-street parking as required by this ordinance and/or for use of the general public, except that no such parking area shall involve the conduct of any business or be operated commercially or for private profit.

7. One Class A or one Class B sign, except that no Class B sign shall be permitted on vacant land or land occupied by a single or two-family dwelling; nor shall any Class B sign be located in the minimum front, side or rear yards, as provided in this District.
No flashing, blinking or neon electric signs shall be placed, either on the building or separately, facing any (R) District.

3. BUILDING HEIGHT LIMIT: The maximum building height shall be forty-five (45) feet or three (3) stories, except in Approach Zone, see "General Provisions, Sec. 4".

4. BUILDING SITE AREA REQUIRED:

1. The minimum building area per family shall be a lot or parcel of land as follows:

a. For a one-family dwelling ten thousand (10,000) square feet per family.

b. For a two-family dwelling five thousand (5,000) square feet per family.

c. For a multiple-family dwelling two thousand (2,000) square feet per family.

2. For all main buildings permitted in this zone the building site area shall be not less than twice the ground-floor area of the building or buildings.

5. FLOOR AREA REQUIREMENTS: The minimum floor area requirement in multiple dwellings shall be seven hundred and fifty (750) square feet per family.

6. FRONT YARD REQUIRED: There shall be a front yard of no less than thirty (30) feet, the said Thirty (30) feet to be measured from street line to the nearest point of the structure.

F. SIDE YARD REQUIRED: There shall be side yards, the width of each to be not less than ten (10%) percent of the average width of the lot but in no case shall each side yard be less than ten (10) feet, except that for corner lots the side yard adjoining the street shall be not less than thirty (30) feet.

G. REAR YARD REQUIRED: There shall be a rear yard of not less than thirty (30) feet in depth.

H. ADDITIONAL AREA REGULATIONS: In the case of group houses or court apartments, buildings may rear upon the required side yard, provided:

1. The minimum side yard shall be twenty (20) feet.

2. The width of the court shall not be less than two (2) times the width of the side yard as required in this provision, provided that open unenclosed porches may project into a required court not more than twenty (20%) percent of the width of such court.

3. Where a roadway is provided in or through the court, a minimum width of ten (10) feet shall be allowed for such roadway in addition to the width of court required above.

I. PARKING REGULATIONS: In case of hotels and hospitals, adequate off-street parking space shall be provided to accommodate all parked automobiles with a minimum of one (1) parking space for each of the first twenty (20) rooms or suites, and one additional parking space for every five (5) rooms or suites in excess of twenty (20). Where a lot is occupied by a multiple dwelling, there shall be provided accessible parking space on the lot adequate to accomodate one (1) car for each dwelling unit provided in the main building. Such parking space shall not be located within the minimum front yard.

SECTION 11

MULTIPLE FAMILY DISTRICT, R-2

A. USES PERMITTED:

1. Any use permitted in the R-1 AA and R-2 AA Districts, and conforming to the regulations for those Districts.
2. Guest houses, tourist homes, boarding and lodging houses.
3. Accessory buildings and structures customarily incident to any of the above uses, when occupying not more than fifteen (15%) percent of the required rear yard, and located on the same lot and not involving the conduct of a business. No accessory building shall be located closer than five (5) feet to any boundary line of the premises and shall conform in design, construction and character to that of the main building.
4. Schools; public and private, except correctional institutions.
5. Libraries, community centers and buildings used exclusively by the Federal, State, County or City government for public purposes.
6. Churches, and other places of worship; including Sunday School buildings.
7. Parks, recreation grounds, playgrounds, playfields under the supervision of the Town of Miami Springs.
8. Parking areas to provide off-street parking as required by this ordinance and/or for use of the general public, except that no such parking area shall involve the conduct of any business or be operated commercially or for private profit.
9. Public utilities, substations and facilities as may be required for the general welfare of the Town, but excluding repair and storage facilities.
10. One Class A or one Class B sign, except that no Class B sign shall be permitted on vacant land or land occupied by a single or two-family dwelling; nor shall any Class B sign be located in the minimum front, side, or rear yards, as provided in this district.

B. BUILDING HEIGHT LIMIT: The maximum building height shall be forty-five (45) feet or three (3) stories, except in Approach Zone (See General Provisions, Section 4).

C. BUILDING SITE AREA REQUIRED: The minimum building area per family shall be a lot or parcel of land as follows:

1. For a one (1) family dwelling - 5,000 square feet per family.
2. For a two (2) family dwelling - 2,500 square feet per family.
3. For a multiple family dwelling -1,500 square feet per family.

D. FIRST FLOOR AREA REQUIREMENTS: The minimum floor area requirement in multiple dwellings shall be four hundred fifty (450) square feet per family.

E. FRONT YARD REQUIRED: There shall be a front yard of a depth not less than the average depth of the front yards of the lot or lots next adjacent thereto on either side. In case there is no other dwelling in the block the front yard shall not be less than ten (10) feet.

F. SIDE YARD REQUIRED: There shall be side yards, the width of each shall be not less than ten (10) feet.

G. REAR YARD REQUIRED: There shall be a rear yard not less than twenty (20) feet in depth.

H. ADDITIONAL AREA REGULATIONS: In the case of group houses or court apartments, buildings may rear upon the required side yard, provided:

1. The minimum required side yard shall be twenty (20) feet in width.
2. The width of the court shall not be less than two (2) times the width of the side yard as required in this provision, provided that open unenclosed porches may project into a required court not more than twenty (20%) percent of the width of such court.
3. Where a roadway is provided in or through the court, a minimum width of ten (10) feet shall be allowed for such roadway and shall be in addition to the width of court required above.

I. PARKING REGULATIONS:

1. In case of hotels and hospitals, adequate off-street parking space shall be provided to accommodate all parked automobiles with a minimum of one (1) parking space for each of the first twenty (20) rooms or suites, and one additional parking space for every five (5) rooms or suites in excess of twenty (20).
2. Where a lot is occupied by a multiple dwelling, there shall be provided

accessible parking space on the lot adequate to accommodate one (1) car for each dwelling unit provided in the main building. Such parking space shall not be located within the minimum front yard.

3. For churches the number of parking spaces required shall be determined by dividing the total seating capacity by seven (7).

4. For any other permitted use there shall be one parking space for each five hundred (500) square feet of the floor area in the building or fraction thereof.

SECTION 12

LOCAL RETAIL BUSINESS DISTRICT, C-1A

A. USES PERMITTED:

1. Any use permitted in R2 District when conforming to the regulations for that District.

2. Any other similar enterprise or business which is not more obnoxious or detrimental to the welfare of the community, including but not limited to:

Agency, for employment, travel and services performed elsewhere.

Antique shop.

Art or Photographic Studio and Laboratory.

Automobile parts store, retail only.

Bank or other financial institutions.

Bakery, when products sold only at retail on the premises.

Barber shop, beauty parlor, chiropody, massage or similar personal service shop.

Bicycle sales and repair shop.

Business or commercial school.

Butcher shop.

Catering and/or delicatessen business.

Clothing store.

Confectionery and ice cream store.

Custom Tailoring, dressmaking, millinery or similar retail trade.

Drug store, department store or Ten Cent Store.

Electric appliance, retail sale and repair.

Florist shop.

Furniture, furnishings and decoration store, retail only.

Fruit store.

Gift shop.

Grocery store.

Hardware store.

Jewelry store.

Locksmith shop.

Laundry, self-service or laundromat, only when sanitary and safe disposal of waste water is provided, and when operated without producing smoke or noxious fumes or odors.

Lawnmower rental sales and service shop.

Luggage shop.

Music, radio and television, rental sales and repair store, retail only.

Natatorium.

Offices.

Optical shop.

Paint store.

Parking lot or Parking Garage for Storage only.

Plumbers shop.

Printing shop.

Post Office.

Restaurant or cafeteria.

Sales or show rooms.

Shoe store or repair shop, retail only.

Sporting goods store, retail.

Stationery store.

Sundry store.

Theatre or motion picture house.

Toy Shop.

3. Class A and B signs only shall be permitted in this District.

E. BUILDING HEIGHT LIMIT: The maximum building height shall be forty-five (45) feet or three (3) stories.

C. BUILDING SITE AREA REQUIRED: The minimum building site area required shall be a lot or parcel of land twenty-five hundred (2500) square feet in area.

D. FRONT YARD REQUIRED FOR A BUILDING DESIGNED FOR COMMERCIAL USE: All buildings shall be built to the front property line except as follows:

(a) A set-back of fifteen (15) feet may be permitted for beautification purposes only.

(b) Where frontage on the same street has an adjoining or abutting lot restricted to residential use, the front yard requirements of such residential district shall apply.

E. SIDE YARD REQUIRED: No side yard is required for a building designed for commercial use, except where required for "Protective Screening" as hereinafter provided.

F. REAR YARD REQUIRED: Unless otherwise provided on the lot, there shall be a required rear yard of not less than thirty (30%) percent of the area of the lot or building site, to provide space for septic tanks, drains and other necessary uses.

E. FLOOR AREA REQUIREMENTS: The minimum first floor area of a commercial building in this district shall be fifteen hundred (1500) square feet.

F. PROTECTIVE SCREENING: Where any lot in this district adjoins a residential district, a five (5) foot strip of land along the boundary of said residential district shall be set aside and used for planting or walls by the owner of said lot at his expense, to form an effective screen for the protection of the residential area. No structure, except such screen or wall or utilities or drainage facilities, shall be placed or permitted in such area. No vehicular access shall be permitted over the area, except for the installation or maintenance of screening, utilities and drainage facilities.

I. PARKING SPACE REQUIRED: Where any building is erected, reconstructed or converted for any business purposes permitted in this district, except bars or restaurants, there shall be provided off-street parking space in the ratio of not less than one (1) parking space for each five hundred (500) square feet of floor area in the building or fraction thereof.

For bars and restaurants there shall be provided off-street parking in the ratio of one (1) parking space for each five (5) seats in lieu of the foregoing square footage requirements.

SECTION 13

LIMITED COMMERCIAL DISTRICT, C-1

A. USES PERMITTED:

1. Any use permitted in C-1A Local Business District.

2. Any other similar enterprise or business which is not more obnoxious or detrimental to the welfare of the community, including but not limited to:

Assembly and maintenance of small parts, such as radios, carburetors, electronic devices, small generators and cameras.

Automobile Service Station or Filling Station.

Car Lot for rental of automobiles, or commercial parking.

Dry Cleaning or Dyeing.

Garage, Service and/or Storage.

Hotel.

Laundry.

Mail Order House.

Mortuary or Funeral Parlor.

Motor Court or Motel.

Pawn Shop.

Private Club.

Storage Warehouse, excepting storage of chemicals, petroleum products, or any dangerous, explosive, or highly inflammable material.

Wholesale Establishment.

BUT EXCLUDING: All industrial or manufacturing plants, lumber yards, junk dealer, auto wrecking, or any business where the materials sold are not housed within a building or where the uses may be obnoxious or offensive to nearby residential districts by reason of odor, dust, smoke, gas, noise or vibration, or anything which might constitute an eyesore or nuisance.

3. Class A and Class B signs only shall be permitted in this District, except that Class C signs shall also be permitted in this District only east of East Drive, and provided that such signs erected in any yard or open space shall be set back from all streets or other public ways a distance equal to the height of the sign from grade to its uppermost point and within 100 ft. of the No. right of way line of 36th Street.

B. BUILDING HEIGHT LIMIT: The maximum building height shall be forty-five (45) feet or three (3) stories, except in Approach Zone (See General Provisions, Section 4).

C. BUILDING SITE AREA REQUIRED: The minimum building site area required shall be a lot or parcel of land twenty-five hundred (2500) square feet in area.

D. FRONT YARD REQUIRED FOR A BUILDING DESIGNED FOR COMMERCIAL USE: All buildings shall be built to the front property line except as follows:

a) A set-back of fifteen (15) feet may be permitted for beautification purposes only.

b) Where frontage on the same street has an adjoining or abutting lot restricted to residential use, the front yard requirements of such residential district shall apply.

E. SIDE YARD REQUIRED: No side yard is required for a building designed for commercial use, except where required for "Protective Screening" as hereinafter provided.

F. REAR YARD REQUIRED: Unless otherwise provided on the lot, there shall be a rear yard required of not less than thirty (30%) percent of the area of the lot or building site, to provide space for septic tanks, drains and other necessary uses.

G. FLOOR AREA REQUIREMENTS: The minimum first floor area of a commercial building in this district shall be fifteen hundred (1500) square feet.

H. PROTECTIVE SCREENING: Where any lot in this district adjoins a residential district, a five (5) foot strip of land along the boundary of said residential district shall be set aside and used for planting or walls by the owner of said lot at his expense, to form an effective screen for the protection of the residential area. No structure, except such screen or wall or utilities or drainage facilities, shall be placed or permitted in such area. No vehicular access shall be permitted over the area, except for the installation or maintenance of screening, utilities and drainage facilities.

I. PARKING SPACE REQUIRED: Where any building is erected, reconstructed or converted for any business purposes permitted in this district, except bars or restaurants, there shall be provided off-street parking spaces in the ratio of not less than one (1) parking space for each five hundred (500) square feet of floor area in the building or fraction thereof.

For bars or restaurants there shall be provided off-street parking in the ratio of one (1) parking space for each five (5) seats in lieu of the foregoing square footage requirements.

SECTION 14

NON-CONFORMING USES

A. A non-conforming use of a building, or portion thereof, or of land, which use existed lawfully at the time of the adoption or subsequent amendment of this Ordinance, may be continued or changed subject to the following regulations:

1. No building which has been damaged by fire, explosions, act of God or the public enemy to the extent of more than fifty (50) percent of the replacement value of the building immediately prior to damage, shall be restored except in conformity with the regulations in this Ordinance.

2. No building or portion thereof, or land used in whole or in part for non-conforming purposes according to the provisions of this Ordinance, which hereafter becomes and remains vacant for a continuous period of one (1) calendar year shall again be used except in conformity with the regulations of the district in which such building or land is situated.

3. A non-conforming use of a building or land shall not be extended or enlarged.

4. A non-conforming structure that was erected, converted, or structurally altered in violation of the provisions of the ordinance which this Ordinance supersedes shall not be validated by the adoption of this Ordinance, and such violations or any violations of the Ordinance may be ordered removed or corrected by the proper officials at any time.

5. The lawful use of land for storage purposes, or for advertising signs and billboards, which does not conform to the provisions of this Ordinance shall be discontinued within three (3) years from the date of the adoption of this Ordinance, and the same uses of land which becomes non-conforming by reason of a subsequent change in this Ordinance shall also be discontinued within three (3) years from date of the change.

6. Whenever a non-conforming use of a building has been changed to a conforming use, such use shall not thereafter be changed to a non-conforming or less restricted use.

SECTION 15

ZONING AND PLANNING BOARD

A. A Zoning and Planning Board is hereby created and established.

B. The Zoning and Planning Board shall consist of five (5) members appointed by the Mayor with the consent of the Council. The existing Zoning and Planning Board is hereby appointed to serve until April 30, 1954. The term of any member appointed to the Board between the effective date of this ordinance and April 30, 1954, shall expire on April 30, 1954. Effective April 30, 1954, appointments shall be made as follows:

1 member for a one-year term

1 member for a two-year term

1 member for a three-year term

1 member for a four-year term

1 member for a five-year term

Starting April 30, 1955, one (1) member shall be appointed each year for a five-year term. If for any reason an appointment should not be made by the required date, the incumbent will continue to serve until his successor has been appointed.

C. In the event of the death or resignation of a member, or his failure to attend any meeting for a period of sixty (60) days, a successor shall be appointed by the Mayor with the consent of the Council to fill the unexpired term.

D. The Zoning and Planning Board shall act only as a recommending or advisory body and its recommendations shall be subject to the final action of the Town Council.

E. The Zoning and Planning Board shall have the following jurisdiction and powers:

1. To prescribe rules and regulations and the form of applications to be used by applicants.
2. To make surveys, from time to time, of the Town and to make recommendations to the Council concerning all changes to be made in the zoning ordinances of the Town.
3. To call, hear and consider all applications for change in the use requirements established in any district by any zoning ordinance, and to make findings and recommendations to the Town Council.
4. To receive and approve all new subdivision plats before submission to the Council.

F. Each application filed with the Zoning and Planning Board shall be accompanied with the payment by the applicant of the sum of Twenty-five ($25.00) Dollars to defray the costs and expenses incident to passing upon the application.

SECTION 16

BOARD OF ADJUSTMENT

A. There is hereby created and established a Board of Adjustment.

B. This Board shall consist of five (5) members appointed by the mayor with the consent of the Council and removable for cause upon written charges after a public hearing. The existing Board is hereby appointed to serve until April 30, 1954. The term of any member appointed to the Board between the effective date of this ordinance and April 30, 1954, will expire on April 30, 1954. Effective April 30, 1954, appointments shall be made as follows:

1 member for a one-year term

1 member for a two year term

1 member for a three-year term

1 member for a four-year term

1 member for a five-year term

Starting April 30, 1955, one (1) member shall be appointed each year for a five-year term. If for any reason an appointment should not be made by the required date, the incumbent will continue to serve until his successor has been appointed. In the event of the death or resignation of a member or his failure to attend any meeting for a period of sixty (60) days, a successor shall be appointed by the mayor with the consent of the Council to fill the unexpired term.

C. The Board of Adjustment shall prescribe and adopt rules and regulations. Meetings of the Board of Adjustment shall be open to the public. The Board of Adjustment shall keep minutes of its proceedings, showing the vote of each member upon each question or, if absent or failing to vote, indicating such fact, and shall keep records of its examinations and other official actions, all of which shall be immediately filed in the office of the Board and shall be a public record.

D. When there are practical difficulties or unnecessary hardships in the way of carrying out the strict letter of this Ordinance, appeals to the Board may be taken by any person aggrieved or by any department of the governing body of the Town of Miami Springs, affected by any decision of the administrative official.

E. The Board shall have the following duties and powers:

1. To hear and decide appeals where it is alleged there is error in

any order, requirement, decision or determination made by the administrative official in the enforcement of this ordinance.

2. To authorize upon appeal in specific cases such variance from the terms of this Ordinance as will not be contrary to the public interest where, owing to special conditions a literal enforcement of the provision of the Ordinance will result in unnecessary hardship, and so that the spirit of the Ordinance shall be observed and substantial justice done.

F. In exercising the above mentioned powers, the Board by the concurring vote of four members may reverse or affirm, wholly or partly, or may modify the order, requirement, decision or determination appealed from and may make such order, requirement, decision or determination as ought to be made, and to that end shall have all the powers of the official from whom the appeal is taken.

G. In considering all proposed variations to this Ordinance the Board shall before making any finding in a specific case, first determine that the proposed variation will not constitute any change in the districts shown on the zoning map and will not impair an adequate supply of light and air to adjacent property, or materially increase the congestion in public streets, or increase the danger of fire, or materially diminish or impair established property values within the surrounding area, or in any other respect impair the public health, safety, morals and general welfare of the Town of Miami Springs.

SECTION 17

INTERPRETATION, PURPOSE AND CONFLICT

In interpreting and applying the provisions of this Ordinance, they shall be held to be the minimum requirements for the promotion of the public safety, health, convenience, comfort, morals, prosperity and general welfare. This ordinance supercedes and supplants all previous Zoning Ordinances. It is not intended by this Ordinance to interfere with or abrogate or annul any other ordinance, rules, regulations or permits previously adopted or issued, and not in conflict with any of the provisions of this Ordinance, or which shall be adopted or issued pursuant to law relating to the use of buildings or premises and likewise not in conflict with this Ordinance; nor is it intended by this Ordinance to interfere with or abrogate or annul any easements, covenants or other agreements between parties; provided, however, that where this Ordinance imposes a greater restriction upon the use of buildings or premises or upon height of buildings, or requires larger open spaces or larger lot or floor areas than are imposed or required by such ordinances or agreements, the provisions of this Ordinance shall control.

SECTION 18

AMENDMENTS AND CHANGES

A. Upon recommendation from the Town Zoning and Planning Board, the Town Council may from time to time amend, supplement, change or repeal the regulations, restrictions or district boundaries set out in this ordinance as provided for in the Town Charter. However, no such regulation, restriction or boundary change shall become effective until after a public hearing in relation thereto. At least fifteen (15) days notice of the time and place of such hearing shall be published in a newspaper of general circulation in said municipality.

B. In case, however, that the Zoning and Planning Board disapproves the change, or protest against such change signed by the owners of twenty (20%) percent or more either of the area of the lots included in such proposed change, or of those immediately adjacent in the rear thereof extending five hundred (500) feet therefrom, or of those directly opposite thereto extending five hundred (500) feet from the street frontage of such opposite lots such amendments shall not become effective except by the favorable vote of three-fourths (3/4) of the governing body of said municipality.

SECTION 19

ENFORCEMENTS, VIOLATIONS AND PENALTIES

A. The Building Inspector is hereby designated and authorized to enforce this Ordinance under the direction of the Town Clerk.

B. Any person violating any of the provisions of this Ordinance shall be guilty of a misdemeanor. The owner of any buildings or premises or part thereof, where anything in violation of this Ordinance shall be placed, or shall exist, and any architect, builder, contractor, agent or person employed in connection therewith and who may have assisted in the commission of any such violation shall be guilty of a separate offense.

C. Any person, firm or corporation who violates, disobeys, omits, neglects or refuses to comply with, or who resists the enforcement of any of the provisions of this Ordinance shall be fined not less than Five ($5.00) Dollars nor more than Five hundred ($500.00) Dollars; or shall be imprisoned in the City Jail for not more than ninety (90) days, or both, at the discretion of the Court. Each day that a violation is permitted to exist shall constitute a separate offense.

SECTION 20

VALIDITY

A. Should any section or provision of this Ordinance be declared by a court of competent jurisdiction to be invalid, such decision shall not affect the validity of the Ordinance as a whole, or any part thereof, other than the part so declared to be invalid.

B. All ordinances, or parts of ordinances in conflict herewith, are hereby repealed.

SECTION 21

EFFECTIVE DATE

This Ordinance shall become effective immediately upon its passage.

Passed and adopted this 8th day of February, 1954.

Town Clerk

W. C. Berreen
Mayor

Public Hearing Advertised, Miami Herald, November 25, 1953.

Public Hearing Held - December 9, 1953.

Ordinance Adopted First Reading, January 11, 1954.

Ordinance Adopted Final Reading, February 8, 1954.

I, J. D. Ryan, Town Clerk of the Town of Miami Springs, Florida, do hereby certify that the above and foregoing is a true and correct copy of Ordinance No. 184, as adopted by the Town Council on the 8th day of February, 1954.

IN WITNESS WHEREOF, I have hereunto affixed my hand and the seal of the Town of Miami Springs, Florida, this _____ day of _____ A.D. 19___.

_____

(SEAL)

ORDINANCE NO. 184.1

AN ORDINANCE TO AMEND ORDINANCE NO. 184, ENTITLED "ZONING ORDINANCE"

WHEREAS, the Council deemed it in the public interest to consider the changing of the zoning regulations upon the property herein described, and

WHEREAS, in order to give all persons interested an opportunity to voice any objections to the proposed change, a public hearing by the Council was held on May 10, 1954, after due and reasonable publication of a notice of hearing to be held on such date, which notice was published in the Miami Daily News, a newspaper of general circulation in Dade County, Florida, on April 23, 1954, and

WHEREAS, no objections to the proposed change of zoning were made,

NOW THEREFORE, BE IT ORDAINED BY THE TOWN OF MIAMI SPRINGS:

Section 1. That Ordinance No. 184 of the Town of Miami Springs, being an ordinance establishing a zoning plan within the Town of Miami Springs, and the map accompanying said ordinance, be and the same are hereby amended in the following respect, that is to say:

That from and after the passage of this ordinance, it shall be lawful to use Lots 11 and 12, Block 4, Edgewater Park, PB 17-72 and the South 100 feet of the West 124.81 feet of Tract E, Revised Plat of a portion of Edgewater Park, PB 31-76, for all purposes described in said Ordinance No. 184 under the classification Commercial C-1.

Section 2. That on the aforesaid map attached to said Zoning Ordinance No. 184, the aforesaid property is hereby transferred from Zone Multiple-family R-2 to Zone Commercial C-1.

Section 3. In all other respects said ordinance is unaffected by this amendment.

Section 4. This ordinance will take effect immediately upon becoming a law.

PASSED AND ADOPTED, this 14th day of June, 1954.

W. C. Herrell
Mayor

Town Clerk

1st reading - May 24, 1954
2nd " - June 14, 1954

ORDINANCE NO. 184.2

AN ORDINANCE TO AMEND ORDINANCE NO.184, ENTITLED "ZONING ORDINANCE"

WHEREAS, the Council deems it in the public interest to consider the changing of the zoning regulations upon the property herein described, and

WHEREAS, in order to give all persons interested an opportunity to voice any objections to the proposed change, a public hearing by the Council was held on June 14, 1954, after due and reasonable publication of a notice of hearing to be held on such date, which notice was published in the Miami Daily News, a newspaper of general circulation in Dade County, Florida, on May 26, 1954, and

WHEREAS, no objections to the proposed change of zoning were made,

NOW, THEREFORE,

BE IT ORDAINED BY THE TOWN OF MIAMI SPRINGS:

Section 1. That Ordinance No. 184 of the Town of Miami Springs, and the accompanying map, be and the same are hereby amended in the following respect, that is to say:

That henceforth it shall be lawful to use Tract A, Block 58, Country Club Estates, Section 1, Plat Book 34, page 39, and Lots 3 and 4, Block 58, Country Club Estates, Section 1, Plat Book 28, page 11, for all purposes described in said Ordinance No. 184 under the classification Commercial C-1.

Section 2. That the said Ordinance No. 184 and the accompanying map be amended in the following respect:

That henceforth it shall be lawful to use Trace B, Block 58 Country Club Estates, Section 1, Plat Book 34, page 39, for all purposes described in said Ordinance No. 184 under the classification of Multiple Family R-2.

Section 3. This ordinance will take effect immediately upon becoming a law.

PASSED AND ADOPTED, this 26th day of July, 1954.

W. C. Berrien
Mayor

Town Clerk

1st reading - July 12, 1954
2nd " - July 26, 1954

ORDINANCE NO. 184.3

AN ORDINANCE TO AMEND ORDINANCE NO. 184, ENTITLED "ZONING ORDINANCE"

WHEREAS, the Council deemed it in the public interest to consider the changing of the zoning regulations upon the property herein described, and

WHEREAS, in order to give all persons interested an opportunity to voice any objections to the proposed change, a public hearing by the Council was held on July 12, 1954, after due and reasonable publication of a notice of hearing to be held on such date, which notice was published in the Miami Daily News, a newspaper of general circulation in Dade County, Florida, on June 25, 1954, and

WHEREAS, no objections to the proposed change of zoning were made,

NOW, THEREFORE,

BE IT ORDAINED BY THE TOWN OF MIAMI SPRINGS:

Section 1. That Ordinance No. 184 of the Town of Miami Springs, being an ordinance establishing a zoning plan within the Town of Miami Springs, and the map accompanying said ordinance, be and the same are hereby amended in the following respect, that is to say:

That from and after the passage of this ordinance, it shall be lawful to use the following property for all purposes described in said Ordinance No. 184 under the classification Commercial (C-1A):

Lots 1 through 12 inclusive, and Lots 24 through 30, inclusive, Block 6, EDGEWATER PARK, PB 34-90

The South 670 feet of the West 375 feet of the W½ of the E½ of the SW¼, less streets, of Sec. 20-53-41, 3.99 acres, formerly described as all of Block 3, EDGEWATER PARK, PB 17-72

Tract "E", EDGEWATER PARK, Revised PB 34-76, 2.61 acres, formerly described as Lots 1 to 10 inclusive and Lots 24 to 30 inclusive, of Block 4, EDGEWATER PARK, PB 17-72

Section 2. That on the aforesaid map attached to said Zoning Ordinance No. 184, the aforesaid property is hereby transferred from Zone Multiple-Family (R-2) to Zone Commercial (C-1).

Section 3. In all other respects, said ordinance is unaffected by this amendment.

Section 4. This ordinance will take effect immediately upon becoming a law.

PASSED AND ADOPTED, this August 9, 1954.

W. C. Berree
Mayor

Town Clerk

First Reading July 26, 1954

Second Reading August 9, 1954

ORDINANCE NO. 184.4

AN ORDINANCE TO AMEND ORDINANCE NO. 184, ENTITLED "ZONING ORDINANCE"

WHEREAS, the Council deemed it in the public interest to consider the changing of the zoning regulations on the property herein described, and

WHEREAS, in order to give all persons interested an opportunity to voice any objections to the proposed change, a public hearing by the Council was held on August 9, 1954, after due and reasonable publication of a notice of hearing to be held on such date, which notice was published in the Miami Daily News, a newspaper of general circulation in Dade County, Florida, on July 23, 1954

WHEREAS, no objections to the proposed change of zoning were made,

NOW, THEREFORE,

BE IT ORDAINED BY THE TOWN OF MIAMI SPRINGS:

Section 1. That Paragraph A-3, Section 13, of Ordinance No. 184 of the Town of Miami Springs, being an ordinance establishing a zoning plan within the Town of Miami Springs, and the map accompanying said ordinance, be and the same are hereby amended in the following respect, that is to say:

Class A and Class B signs only shall be permitted in this district except that in so much of said district as lies east of Palmetto Drive and on LeJeune Road between 36th Street and South Royal Poinciana Blvd. Class C signs shall also be permitted. All signs erected in any yard or open space shall be set back from all streets and public ways a distance equal to the height of the sign from grade to its uppermost point. No Class C sign shall be erected at a distance from 36th Street greater than one hundred (100) feet, but this limitation shall not apply to signs facing on LeJeune Road between 36th Street and Royal Poinciana Blvd.

Section 2. In all other respects said ordinance is unaffected by this amendment.

Section 3 This ordinance will take effect immediately upon becoming a law.

PASSED AND ADOPTED, this August 23, 1954.

W. C. Hervey
Mayor

Town Clerk

First Reading, August 9, 1954

Second Reading, August 23, 1954

ORDINANCE NO. 184.5

AN ORDINANCE TO AMEND ORDINANCE NO. 184, ENTITLED "ZONING ORDINANCE"

BE IT ORDAINED BY THE TOWN OF MIAMI SPRINGS:

Section 1. That paragraph 1 of sub-section G of Section 4 of Ordinance No. 184 is hereby amended so that the same shall read as follows:

> No fence, wall or planting over three and one-half (3½) feet in height above established grade shall be permitted in any (R) District within twenty (20) feet of a corner, street, or alley intersection.

Section 2. In all other respects said ordinance is unaffected by this amendment.

Section 3. This ordinance will take effect immediately upon becoming a law.

PASSED AND ADOPTED, this 13th day of September, 1954.

W. C. Bersee
Mayor

Town Clerk

First Reading, August 23, 1954
Second " Sept. 13, 1954.

ORDINANCE NO. 184.6

AN ORDINANCE AMENDING ORDINANCE NO. 184 ENTITLED "ZONING ORDINANCE"

BE IT ORDAINED BY THE TOWN OF MIAMI SPRINGS:

Section 1. That paragraph A of Section 4 of Ordinance No. 184 shall be amended so that the same shall read as follows:

A. ALCOHOLIC BEVERAGES: In any District within three hundred (300) feet of any (R) District, or within five hundred (500) feet of any church or public school, no premises shall be used for, nor shall any use or occupancy permit, the sale of liquor, beer, wine, or other alcoholic, vinous or malt beverages to be consumed on the premises, except that hotels of fifty (50) rooms or more may provide such service for guests when accessible to patrons thereof only from the main entrance and main lobby of the hotel and no activity connected therewith is visible from a street or other public way, and except restaurants, as defined in Ordinance No. 110-D. These distances shall be measured in a direct air line between the nearest point on the boundary of the premises involved and the nearest point on the boundary of said district, school or church premises.

Section 2. In all other respects, said Ordinance shall be unaffected by this amendment.

Section 3. This ordinance shall take effect immediately upon its passage.

PASSED AND ADOPTED this 11th day of October, 1954.

W. C. Bersee
Mayor.

Town Clerk

1st reading - Sept 27, 1954
2nd reading - Oct 11 1954

ORDINANCE NO. 184.7

AN ORDINANCE TO AMEND ORDINANCE NO. 184, ENTITLED "ZONING ORDINANCE"

WHEREAS, the Council deemed it in the public interest to consider the changing of the zoning regulations upon the property herein described, and

WHEREAS, in order to give all persons interested an opportunity to voice any objections to the proposed change, a public hearing by the Council was held on November 8, 1954, after due and reasonable publication of a notice of hearing to be held on such date, which notice was published in the Miami Daily News, a newspaper of general circulation in Dade County, Florida, on October 22, 1954, and

WHEREAS, no objections to the proposed change of zoning were made,

NOW THEREFORE, BE IT ORDAINED BY THE TOWN OF MIAMI SPRINGS:

Section 1. That Ordinance No. 184 of the Town of Miami Springs, being an ordinance establishing a zoning plan within the Town of Miami Springs, and the map accompanying said ordinance, be and the same are hereby amended in the following respect, that is to say:

> That from and after the passage of this ordinance, it shall be lawful to use Lots 22 to 36 inclusive, Block 8, EDGEWATER PARK, PB 17-72, for all purposes described in said Ordinance No. 184 under the classification Commercial (C-1).

Section 2. That on the aforesaid map attached to said Zoning Ordinance No. 184, the aforesaid property is hereby transferred from Zone Multiple-Family (R-2) to Zone Commercial (C-1).

Section 3. In all other respects said ordinance is unaffected by this amendment.

Section 4. This ordinance will take effect immediately upon becoming a law.

PASSED AND ADOPTED, this 13th day of December, 1954.

ATTEST:

Town Clerk

W. C. Benecke
Mayor

1st reading - Nov. 22, 1954
2nd reading - Dec 13 1954

Ord. 184.7

ORDINANCE NO. 184.8

AN ORDINANCE TO AMEND ORDINANCE NO. 184, ENTITLED "ZONING ORDINANCE"

BE IT ORDAINED BY THE TOWN OF MIAMI SPRINGS:

Section 1. That subsection F of Section 12 of Ordinance No. 184 is hereby amended so that the same shall read as follows:

F. REAR YARD REQUIRED: There shall be a rear yard consisting of an area which is not less than thirty per cent (30%) of the area of the lot or building site to be improved, in order to provide space for septic tanks, drains and other uses, except in those cases where the lot or building site abuts upon a dedicated alley which has a width of not less than 40 feet, in which case the rear yard may be twenty per cent (20%) of the lot or building site area.

Section 2. This Ordinance shall take effect immediately upon becoming a law.

PASSED AND ADOPTED, this 14th day of February, 1955.

W C Hersee
Mayor

Town Clerk

1st reading - Jan 24, 1955
2nd reading - Feb 14 1955

ORDINANCE NO. 184.6

AN ORDINANCE AMENDING [illegible] ORDINANCE NO. [illegible] OF THE TOWN OF MIAMI SPRINGS

BE IT ORDAINED BY THE TOWN OF MIAMI SPRINGS:

Section 1. That Section 1, of Sub-Section (a) of Section 2, of Ordinance No. 184, is hereby amended so that the same shall read as follows:

> From and after the passage of this ordinance, it shall be unlawful to subdivide any property within the Town of Miami Springs, or to open, grade, or improve any streets, therein, or to erect, have constructed or cause to be constructed any residence or other structure on any unplatted land, until a plat of said proposed subdivision shall have first been approved by the Town Council.

Section 2. That Section 2, of Sub-Section (b) of Section 2, of said Section 1, is hereby amended so the same shall read as follows:

> (b) THE FINAL PLAT shall show wherever required the limits of areas thereof to be filled together with the elevation of such fills.
>
> The elevation of fills, wherever required, shall be as established by the Dade County Engineer's Office and as shown on the official map of the Town of Miami Springs dated October 30, 1950, and on file in the Office of the Town Clerk, the said map being made by reference, a part of this Ordinance.

Section 3. This Ordinance will take effect immediately upon its passage and approval.

PASSED AND ADOPTED this 28th day of March, 1955.

W. C. Kersee
Mayor

Town Clerk

1st reading - Mar. 14, 1955
2nd reading - Mar. 28, 1955

ORDINANCE NO. 184.10

AN ORDINANCE TO AMEND ORDINANCE NO. 184, ENTITLED "ZONING ORDINANCE"

WHEREAS, the Council deemed it in the public interest to consider the changing of the zoning regulations upon the property herein described, and

WHEREAS, in order to give all persons interested an opportunity to voice any objection to the proposed change, a public hearing by the Council was held on August 22, 1955, after due and reasonable publication of a notice of hearing to be held on such date, which notice was published in the Home News Weekly, a newspaper of general circulation in Dade County, Florida, on August 5, 1955, and

WHEREAS, no objections to the proposed change of zoning were made,

NOW THEREFORE, BE IT ORDAINED BY THE TOWN OF MIAMI SPRINGS:

Section 1. That Ordinance No. 184 of the Town of Miami Springs, being an ordinance establishing a zoning plan within the Town of Miami Springs, and the map accompanying said ordinance, be and the same are hereby amended in the following respect, that is to say:

> Zoning of all territory annexed by the Town of Miami Springs under authority of Senate Bill 677 which became a law on May 21, 1955, be changed from Single Family, R-1AA (900 square feet floor area), to Single Family, R-E (1200 square feet floor area).

Section 2. In all other respects said ordinance is unaffected by this amendment.

Section 3. This ordinance will take effect immediately upon becoming a law.

PASSED AND ADOPTED, this 26th day of September, 1955.

W. C. Bersee
Mayor

ATTEST:

Town Clerk

1st reading 9/12/55
2nd " 9/26/55

ORDINANCE NO. 184.11

AN ORDINANCE AMENDING ORDINANCE No. 184, BY PROVIDING FOR THE ADOPTION OF A NEW ZONING MAP

WHEREAS, by Ordinance No. 184, Section 3 (a), a map of the Town of Miami Springs showing the districts in which the Town was divided and the boundaries thereof and designated "Official Zoning Map of the Town of Miami Springs" has by recent enlargement of the Town boundaries and changes made in the classification of property in said Town, become out-moded; and

WHEREAS, a new map properly showing all of the property in the Town and the classifications into which the same are put, has been prepared and designated as aforesaid, has been properly authenticated by the Mayor and Town Clerk, under date of February 8, 1954,

NOW, THEREFORE, BE IT ORDAINED by the Town of Miami Springs that Section 3 (a) of Ordinance No. 184 of said Town be and the same is hereby amended, so that it shall read as follows:

A. The Town of Miami Springs in its entirety, is hereby divided into districts. These districts and the boundaries thereof are shown on a map accompanying this ordinance and, by reference, made a part thereof; said map being designated as "Official District Zoning Map of the Town of Miami Springs, which supersedes the official map of said Town dated February 8, 1954".

This ordinance shall take effect immediately upon its passage.

PASSED AND ADOPTED this 10th day of September, 1956.

W. C. Herrell
Mayor

ATTEST:

J. D. Ryan
Town Clerk.

ORDINANCE NO. 184.12

AN ORDINANCE TO AMEND ORDINANCE NO 184, ENTITLED "ZONING ORDINANCE"

WHEREAS, the Council deemed it in the public interest to consider the changing of the zoning regulations on the property herein described, and

WHEREAS, in order to give all persons interested an opportunity to voice any objections to the proposed change, a public hearing by the Town Council was held on October 8, 1956, after due and reasonable publication of a notice of hearing to be held on such date, which notice was published in the Miami Daily News, a newspaper of general circulation in Dade County, Florida, on September 22, 1956, and

WHEREAS, no objections to the proposed change of zoning were made,

NOW, THEREFORE, BE IT ORDAINED by the Town of Miami Springs:

Section 1. That Ordinance No. 184 of the Town of Miami Springs, being an ordinance establishing a zoning plan within the Town of Miami Springs, and the map accompanying said ordinance, be and the same are hereby amended in the following respect, that is to say:

> That from and after the passage of this ordinance, it shall be lawful to use Lots 15 to 28 inclusive, Block 140, Country Club Estates, Section 2, Plat Book 10, page 79, for all purposes described in said Ordinance NO. 184 under the classification Multi-family R-2.

Section 2. That on the aforesaid map attached to said Zoning Ordinance NO. 184, the aforesaid property is hereby transferred from Zone Multi-family, R-2AA, to Multi-family, R-2.

Section 3. In all other respects, said ordinance is unaffected by this amendment.

Section 4. This ordinance will take effect immediately upon becoming a law.

PASSED AND ADOPTED this 22nd day of October, 1956.

W. C. Bersell
Mayor

ATTEST:

1st reading - Oct 8, 1956
2nd reading - Oct 22, 1956.

ORDINANCE NO. 184.13

AN ORDINANCE TO AMEND ORDINANCE NO. 184, ENTITLED "ZONING ORDINANCE".

BE IT ORDAINED BY THE TOWN OF MIAMI SPRINGS:

Section 1. That Section 4 of Ordinance #184, the Zoning Ordinance of the Town, is hereby amended by adding thereto Section "L", dealing with the matter of the location of buildings with respect to the corner of the intersection in which they may be situated in Commercial Zones 1 or 1A, which shall read as follows:

> "1. Vision Clearance: No building or structure shall be erected and no vegetation shall be maintained in any C-1, or C-1A Zone between the sidewalk and a height of ten (10) feet above the established top of the curb grade at any corner in the portion of the block described as follows: Beginning at the intersection of street lines, or street lines produced; thence run along one of the street lines or street lines produced, a distance of ten (10) feet to a point; thence across the corner of the block to a point on the other street lines, or street line produced, said point being ten (10) feet from the above mentioned intersection of street lines, or street line produced; thence run fifteen (15) feet to the point of beginning. A supporting column not more than eighteen (18) inches in diameter at its greatest cross section dimension shall be permitted at the corner.

A diagram showing the manner in which the foregoing direction shall be followed is attached hereto and made a part of this ordinance.

Section 2. In all other respects said ordinance is unaffected by this amendment.

Section 3. This ordinance shall take effect upon its passage.

PASSED AND ADOPTED this 26 th day of November, 1956.

W. C. Bersee
Mayor

ATTEST:

Town Clerk

Adopted, First Reading Nov. 12, 1956
Adopted, Second Reading Nov 26 1956

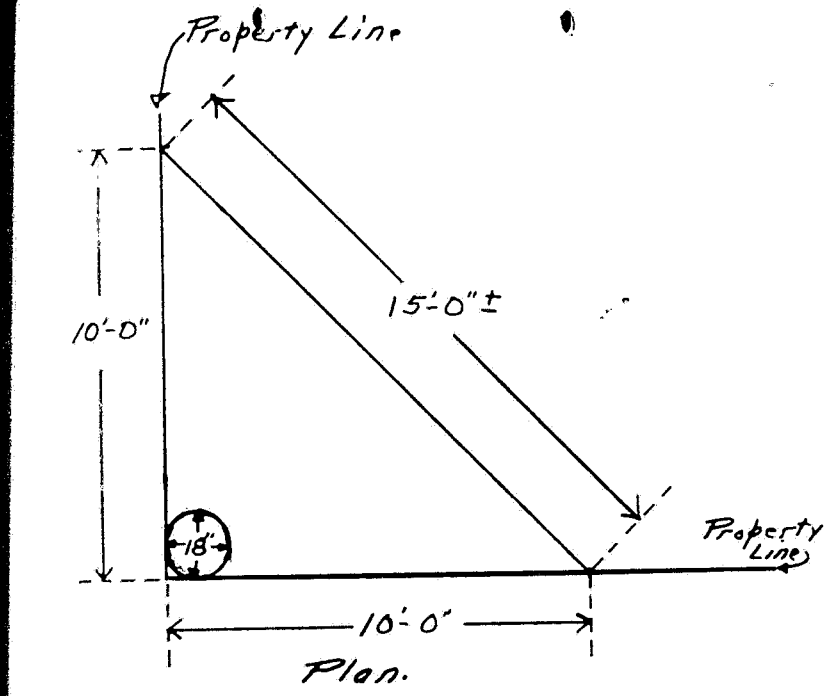

Plan.

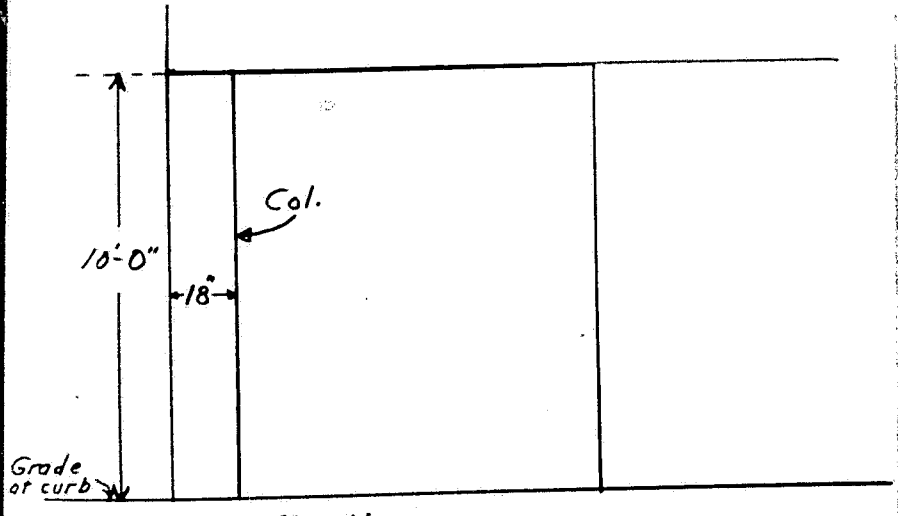

Elevation

Scale = 3/8" = 1'-0"

ORDINANCE NO. 184.14

AN ORDINANCE AMENDING PARAGRAPH E, SECTION 4 OF ORDINANCE NO. 184, BY AUTHORIZING USE OF BUILDING MATERIAL OTHER THAN MASONRY

BE IT ORDAINED BY THE Town of Miami Springs:

Section 1. Paragraph E. of Section 4 of Ordinance No. 184 be and the same is hereby amended so that it shall read as follows:

E. CONSTRUCTION MATERIALS: All buildings shall be of masonry construction as defined herein, except that open, semi-open or screened enclosures, including porches, patios and carportes may be constructed of aluminum, or some similar fire-proof material, provided that such structures shall be attached to the main building and shall otherwise conform to the requirements of the Building Code.

Section 2. In all other respects said Ordinance is unaffected by this amendment.

Section 3. This amendment shall take effect upon its passage.

PASSED AND ADOPTED this 25th day of March, 1957.

J. Black Jr.
Mayor.

ATTEST:

Town Clerk

1st reading Mar. 11, 1957
2nd reading Mar. 25, 1957

ORDINANCE NO. 184.15

BE IT ORDAINED BY THE TOWN OF MIAMI SPRINGS:

Section 1. That Ordinance No. 184 of the Town of Miami Springs is hereby amended by adding thereto Section 13 (a), which shall read as follows:

Section 13 (a) Non-Revenue Off-Street Parking P-1

The following zone is hereby created, in which the uses, as hereinafter enumerated shall be permitted that is to say:

A. Uses Permitted:

1. Any use permitted in the R-1AA District and conforming to the regulations for such District.

2. Off-street parking without charge for automobiles, provided that where an area exceeding 2500 square feet is used for such off-street non-revenue parking, such use shall be subject to the following terms and conditions for the duration of such use:

(a) Said area may not be improved by the building of any structures thereon and is not be used for any purpose other than such parking.

(b) No charge of any sort shall be made for the parking of automobiles.

(c) Where said area adjoins any premises which are used for the purposes permitted in the R-1AA District, said area shall be screened by use of walls, trees or shrubbery of sufficient height to screen the parking area from said R-1AA premises.

Section 2. This ordinance shall take effect immediately upon its passage.

PASSED AND ADOPTED this 28th day of October, 1957.

J. Black R. G.
Mayor

ATTEST:

Town Clerk

First reading 9/23/57
Second " 10/28/57

ORDINANCE NO. 184.16

ORDINANCE REZONING EAL LOTS

BE IT ORDAINED BY THE TOWN OF MIAMI SPRINGS:

Section 1. That Ordinance No. 184 of the Town of Miami Springs, and the accompanying map, be and the same are hereby amended in the following respects, that is to say:

> Henceforth it shall be lawful to use that part of the West 375 feet of the West 1/2 of the East 1/2 of the SW 1/4 of Section 20-53-41, formerly described as Block 12 of EDGEWATER PARK, according to plat recorded in Plat Book 17, page 72, Public Records of Dade County, Florida and Tract "D", EDGEWATER PARK REVISED PLAT in Plat Book 31, page 76, containing 2.24 acres, more or less, formerly known as all Block 11, Lots 1 to 14, inclusive, EDGEWATER PARK, a subdivision in the South 1/2 of Section 20-53-41, according to a plat recorded in Plat Book 17, page 72, Public Records of Dade County, Florida.

for all purposes described in said Ordinance No. 184 under the classification "Non-Revenue Off-Street Parking - P-1".

Section 2. That improvement of the area hereby rezoned in accordance with plans submitted by Eastern Air Lines, Inc. on file with the Town Administrator, designated MIAGF-110-350, Proposed EAL Parking Lot Improvements, Miami Springs, dated September 24, 1957, shall with respect to said Block 12 and said Tract "D" be deemed to satisfy the terms and conditions for Use No. 2, Off-Street Parking as set out in Section 13A of Ordinance No. 184, and parking pursuant to Use No. 2 in Section 13A of Ordinance No. 184 shall be permitted on said Block 12 upon completion of the improvements shown on said plans.

Section 3. This Ordinance shall take effect immediately upon its passage.

PASSED AND ADOPTED this 28th day of October, 1957.

J. Black, Jr.
Mayor

ATTEST:

Town Clerk

First reading 9/23/57
second " 10/28/57

ORDINANCE NO. 184.17

AN ORDINANCE TO AMEND ORDINANCE NO. 184, ENTITLED "ZONING ORDINANCE"

BE IT ORDAINED BY THE TOWN OF MIAMI SPRINGS, FLORIDA:

Section 1. That Ordinance No. 184 and the map accompanying the same be amended in the following respects, that is to say: That upon the adoption of this ordinance it shall be lawful to use Lot 23, Block 86, AMENDED PLAT OF COUNTRY CLUB ESTATES, Section 2, Plat Book 28, Page 19, Dade County Public Records, for multiple family purposes and the said property is hereby changed from single family, R-EA to multiple family, R-2.

Section 2. In all other respects said Ordinance is unaffected by this amendment.

Section 3. This ordinance shall become effective immediately upon its passage.

PASSED AND ADOPTED this 14th day of April, A. D. 1958.

J. J. Black, Jr.
Mayor

ATTEST:

Town Clerk.

Adopted, First Reading Jan. 27, 1958
Second Reading Apr. 14, 1958.

ORDINANCE NO. 184.18

AN ORDINANCE AMENDING THE ZONING ORDINANCE BY PROHIBITING THE CONSTRUCTION OF GUEST HOUSES AND SERVANTS QUARTERS IN SINGLE FAMILY ZONES.

BE IT ORDAINED BY THE TOWN OF MIAMI SPRINGS, FLORIDA:

Section 1. That Section 6, sub-paragraph A-2 of Ordinance No. 184, be amended as follows:

"Servants quarters and guest houses are hereby prohibited".

Section 2. In all other respects said Ordinance is unaffected by this amendment.

Section 3. This Ordinance shall become effective immediately upon its passage.

PASSED AND ADOPTED this 24th day of March, 1958.

J. R. Black, Jr.
Mayor

ATTEST:

Town Clerk

First Reading March 10, 1958

Second Reading March 24, 1958

ORDINANCE NO. 184.19

AN ORDINANCE AMENDING SECTION 4, SUB-PARAGRAPH "K" WITH RESPECT TO THE SIZE OF CLASS "A" SIGNS.

BE IT ORDAINED BY THE TOWN OF MIAMI SPRINGS, FLORIDA:

Section 1. - That Section 4, sub-paragraph "K" of Ordinance No. 184, be amended as follows:

a. Class "A" Sign.

A temporary sign advertising the rental or sale of, or construction being done on the premises whereon it is located, and not exceeding 144 square inches in overall size.

Section 2. - In all other respects said Ordinance is unaffected by this amendment.

Section 3. - This Ordinance shall become effective immediately upon its passage.

PASSED and ADOPTED this 11th day of August, 1958.

J. R. Black, Jr.
Mayor.

ATTEST:

Town Clerk.

Adopted 1st Reading July 28, 1958
Adopted 2nd Reading August 11, 1958

ORDINANCE NO. 184.19-1

AN ORDINANCE AMENDING ORDINANCE NO. 184.19

BE IT ORDAINED BY THE TOWN OF MIAMI SPRINGS:

Section 1: That Section A of Ordinance No. 184.19 of the Town of Miami Springs, be and the same is hereby amended by deleting therefrom the words "or construction being done on".

Section 2: That Section 1 of said ordinance be amended to include Sub-section "B" as follows:

(B) General or prime contractors may erect one sign on each project which is under construction by them, which sign shall not exceed 4 x 5 feet in area. Sub-contractors under such general contractor on such project shall be allowed to attach to the general contractor's sign a sign referring to the sub-contractor which shall not be more than 1 x 5 feet in area. All signs shall be removed at the time of the issuance of the certificate of occupancy of the house under construction unless there are a number of houses being constructed on one project at the same time, in which case the sign shall be removed when the certificate of occupancy is issued on the last house to be constructed on the project.

Section 3: In all other respects said ordinance is unaffected by this amendment.

Section 4: This ordinance shall become effective immediately upon its passage.

PASSED AND ADOPTED this 9th day of May, 1960.

James H. Allen
Mayor

ATTEST:

Town Clerk.

1st reading April 25, 1960
2nd reading May 9, 1960

ORDINANCE NO. 184.20

AN ORDINANCE AMENDING ZONING ORDINANCE NO. 184, REGULATING NUMBER OF HOTEL AND MOTEL ROOMS IN R-2 ZONE.

BE IT ORDAINED BY THE TOWN OF MIAMI SPRINGS, FLORIDA:

Section 1. That Section 11 of Ordinance No. 184 be amended by adding thereto sub-paragraph "J", as follows:

Anything to the contrary hereinabove notwithstanding, no hotel or motel containing more than thirty (30) rooms shall be constructed in any R-2 Zone. No bedroom or living room in such hotel or motel shall contain less than 200 square feet.

Section 2. In all other respects said Ordinance is unaffected by this amendment.

Section 3. This ordinance shall become effective immediately upon its passage.

PASSED AND ADOPTED this 14th day of April, A. D. 1958.

J. E. Black, Jr.
Mayor

ATTEST:

Town Clerk

1st reading 2/24/58
2nd reading 4/14/58

ORDINANCE NO. 184.21

AN AMENDMENT TO THE ZONING ORDINANCE ESTABLISHING A "DUPLEX CLASSIFICATION KNOWN AS R-1AAA

BE IT ORDAINED BY THE TOWN OF MIAMI SPRINGS, FLORIDA:

Section 1. That Section 9 of Ordinance No. 184, be amended by adding thereto sub-section 9-A, as follows:

A. USES PERMITTED:

1. Any use permitted in R-1AA.

2. Multiple family dwelling consisting of one building containing two separate and distinct living units, commonly known as a Duplex.

3. Parking areas to provide off-street parking as required by this ordinance and/or for use of the general public, except that no such parking area shall involve the conducting of any business or be operated commercially or for private profit.

B. BUILDING HEIGHT LIMIT: The maximum building height shall be two and one-half (2-1/2) stories or thirty-five (35) feet.

Accessory buildings and structures customarily incident to any of the above uses, when occupying not more than fifteen (15) percent of the required rear yard, and located on the same lot and not involving the conduct of business. No accessory building shall be located closer than five (5) feet to any boundary line of the premises and shall conform in design, construction and character to that of the main building.

C. BUILDING SITE AREA REQUIRED: The minimum building site area in the R-1AAA district shall be one lot or parcel of land 7500 square feet in area for each dwelling. Such parcels or lots shall have an average width of 75 feet.

D. FRONT YARD REQUIREMENTS: There shall be a front yard of a depth of not less than thirty (30)feet, unless the average depth of the front yard of the lot or lots next adjacent thereto on either side is less than thirty (30) feet, in which case, the front yard shall be the average depth of the front yard of the lot or lots next adjacent thereto on either side. In case there is no dwelling on the block, the depth of the front yard shall be a minimum of thirty (30) feet. The maximum depth of front yard permitted shall be not more than fifty (50) percent of the depth of the lot, or building site.

E. SIDE YARD REQUIREMENTS: There shall be side yards, the width of each to be not less than ten (10%) percent of the average width of the lot but in no case shall each side yard be less than five (5) feet, except that for corner lots the side yard adjoining the street shall be not less than ten (10) feet.

F. REAR YARD REQUIREMENTS: There shall be a rear yard not less than twenty-five (25) feet in depth.

G. FLOOR AREA REQUIREMENTS: The minimum floor areas of dwellings in this district shall be seven hundred fifty (750) square feet per living unit.

Section 2. In all other respects said Ordinance is unaffected by this amendment.

Section 3. This ordinance shall become effective immediately upon its passage.

PASSED AND ADOPTED this 10th day of March, A. D. 1958.

F J Black, Jr.
Mayor

ATTEST:

Town Clerk.

1st reading - 2/24/58

2nd reading - 3/10/58

ORDINANCE NO. 184.22

AN ORDINANCE AMENDING ORDINANCE NO. 184 BY CHANGING THE ZONING ON "THE WEST 60 FEET OF TRACT C, REVISED PLAT OF EDGEWATER PARK, PB 31-76."

BE IT ORDAINED BY THE TOWN OF MIAMI SPRINGS, FLORIDA:

Section 1. That Ordinance No. 184 and the map accompanying the same be amended in the following respects, that is to say: That upon the adoption of this ordinance it shall be lawful to use the West 60 feet of Tract C, Revised Plat of EDGEWATER PARK, Plat Book 31, Page 76, Public Records of Dade County, Florida, for all purposes permitted in Zone R-1 AAA Duplex.

Section 2. In all other respects said Ordinance is unaffected by this amendment.

Section 3. This Ordinance shall become effective immediately upon its passage.

PASSED AND ADOPTED this 28th day of July, 1958.

J. J. Black, Jr.
Mayor.

ATTEST:

Town Clerk.

Adopted First Reading July 14, 1958
Adopted Second Reading July 28, 1958

ORDINANCE NO. 184.23

AN ORDINANCE AMENDING ORDINANCE NO. 184 BY CHANGING THE ZONING ON "TRACT C, LESS THE WEST 60 FEET THEREOF, REVISED PLAT OF EDGEWATER PARK, PB 31-76."

BE IT ORDAINED BY THE TOWN OF MIAMI SPRINGS, FLORIDA:

Section 1. That Ordinance No. 184 and the map accompanying the same be amended in the following respects, that is to say: That upon the adoption of this ordinance it shall be lawful to use Tract C, less the West 60 feet thereof, REVISED PLAT OF EDGEWATER PARK, Plat Book 31, Page 76, Public Records of Dade County, Florida, for all purposes permitted in Zone R-2.

Section 2. In all other respects said Ordinance is unaffected by this amendment.

Section 3. This Ordinance shall become effective immediately upon its passage.

PASSED AND ADOPTED this 14th day of July, 1958.

J. Black Jr.
Mayor.

ATTEST:

Town Clerk.

Adopted First Reading June 23, 1958
Adopted Second Reading July 14, 1958

ORDINANCE NO. 184.24

AN AMENDMENT TO THE ZONING ORDINANCE NO. 184, BY ADDING THERETO SECTION 5-1, CHURCH USE ONLY.

BE IT ORDAINED BY THE TOWN OF MIAMI SPRINGS, FLORIDA;

Section 1. That Ordinance No. 184 and the map accompanying the same be amended by adding thereto Section 5-1, CHURCH USE ONLY as follows:

A. USES PERMITTED:

Any building used for Church Services, Sunday School instruction or other activities directly connected with the normal operation of a Church.

B. BUILDING HEIGHT LIMITS:

The maximum building height shall be 2 1/2 stories or 35 feet, whichever is lower.

C. SITE:

The minimum building site shall be three acres, or the square foot equivalent thereof.

D. FRONT, SIDE AND REAR YARD REQUIREMENTS:

No structure in this area shall be built closer than thirty feet to the exterior property lines of the minimum building site as herein required.

E. OFF-STREET PARKING:

The off-street parking requirements for such district shall be as is now provided for by this Ordinance.

Section 2. In all other respects said Ordinance is unaffected by this amendment.

Section 3. This Ordinance shall become effective immediately upon its passage.

PASSED AND ADOPTED this 8th day of September 1958.

J. Black Jr.
Mayor

ATTEST:

Town Clerk

1st reading Aug. 25, 1958
2nd reading Sept. 8, 1958

Ord. No. 184.24

ORDINANCE NO. 184.25

AN ORDINANCE AMENDING ORDINANCE NO. 184 BY CHANGING THE ZONING ON THE WEST 1/2 OF TRACT 46, FLORIDA FRUIT LAND COMPANY'S SUBDIVISION IN SECTION 13-53-40, PB 2, PATE 17 FOR CHURCH USE ONLY.

BE IT ORDAINED BY THE TOWN OF MIAMI SPRINGS, FLORIDA:

Section 1. That Ordinance No. 184 and the map accompanying the same be amended in the following respects; that is to say:

That upon the adoption of this Ordinance it shall be lawful to use the West 1/2 of Tract 46, FLORIDA FRUIT LAND COMPANY'S SUBDIVISION in Section 13-53-40, Plat Book 2, Page 17, Public Records of Dade County Florida, for CHURCH USE ONLY.

Section 2. In all other respects said Ordinance is unaffected by this amendment.

Section 3. This Ordinance shall become effective immediately upon its passage.

PASSED AND ADOPTED this 8th day of September 1958.

J. H. Black, Jr.
Mayor

ATTEST:

Town Clerk

1st reading - Aug. 25, 1958
2nd reading - Sept. 8, 1958

ORDINANCE NO. 184.26

AN ORDINANCE AMENDING ORDINANCE No. 184, CHANGING THE ZONING OF LOT 9, BLOCK 88, COUNTRY CLUB ESTATES SECTION 2, PB 10-79 FROM R-E RESIDENTIAL, TO C-1A COMMERCIAL

BE IT ORDAINED BY THE TOWN OF MIAMI SPRINGS, FLORIDA:

Section 1. That Ordinance No. 184 and the map accompanying the same be amended in the following respects, that is to say: That upon the adoption of this ordinance it shall be lawful to use Lot 9, Block 88, Country Club Estates Section 2, Plat Book 10, Page 79, Public Records of Dade County, Florida, for all purposes permitted in Zone C-1A, Commercial.

Section 2. In all other respects said Ordinance is unaffected by this amendment.

Section 3. This ordinance shall become effective immediately upon its passage.

PASSED and ADOPTED this 27th day of October, 1958.

J. Blanchard, Jr.
Mayor

ATTEST:

Town Clerk

1st reading 10/13/58
2nd reading 10/27/58

ORDINANCE NO. 184.27

AN ORDINANCE TO AMEND
ORDINANCE NO. 184, ENTITLED
"ZONING ORDINANCE"

BE IT ORDAINED BY THE TOWN OF MIAMI SPRINGS, FLORIDA:

Section 1. That Ordinance No. 184 and the map accompanying the same be amended in the following respects, that is to say: That upon the adoption of this ordinance it shall be lawful to use Lot 1, Block 87, COUNTRY CLUB ESTATES, SECTION 2, Plat Book 10, Page 79, Public Records of Dade County, Florida, for all purposes permitted in Zone C-1A, retail business, and Lot 2, Block 87, COUNTRY CLUB ESTATES, SECTION 2, Plat Book 10, Page 79, Public Records of Dade County, Florida, for all purposes permitted in Zone P-1, non-revenue off street parking.

Section 2. In all other respects said Ordinance is unaffected by this amendment.

Section 3. This Ordinance shall become effective immediately upon its passage.

PASSED AND ADOPTED this 26th day of January, 1959.

James H. Allen
Mayor

ATTEST:

Town Clerk

1st reading - January 12, 1959
2nd reading - January 26, 1959

ORDINANCE NO. 184.28

AN ORDINANCE AMENDING ORDINANCE NO. 184, ENTITLED "ZONING ORDINANCE"

BE IT ORDAINED BY THE TOWN OF MIAMI SPRINGS, FLORIDA:

Section 1. That Ordinance No. 184 and the map accompanying the same be amended in the following respects, that is to say: That upon the adoption of this ordinance it shall be lawful to use the following described property:

> From SW corner of NW 1/4, Section 20, 53 South, 41 East, run north along west line of Section 20 for 101.39 feet; thence SE along NE line of South Royal Poinciana Boulevard 81.06 feet to point of beginning; thence continue SE 106.6 feet; thence NE 220 feet to SW bank of canal; thence NW 293.94 feet; thence south (60 feet east and parallel to west line of said Section 20) to point of beginning,

from R-E, single family, to R-1AAA, duplex.

Section 2. In all other respects said Ordinance is unaffected by this amendment.

Section 3. This Ordinance shall become effective immediately upon its passage.

PASSED AND ADOPTED this 26th day of October, 1959.

James H. Allen
Mayor

ATTEST:

Town Clerk

Adopted First Reading Oct. 12, 1959
" Second Reading Oct. 26, 1959

ORDINANCE NO. 184.29

AN ORDINANCE AMENDING ZONING ORDINANCE 184 WITH RESPECT TO LOTS 9 AND 10, BLOCK 1, EAST SPRINGS, PLAT BOOK 39, PAGE 85.

BE IT ORDAINED BY THE TOWN OF MIAMI SPRINGS, FLORIDA:

Section 1. That Ordinance No. 184 and the map accompanying the same be amended in the following respects, that is to say: That upon the adoption of this ordinance it shall be lawful to use the following described property:

Lot 9, Block 1, EAST SPRINGS, Plat Book 39, Page 85, Dade County Public Records

for multiple family purposes and that said lot be placed in Zone R-2; and

Lot 10, Block 1, EAST SPRINGS, Plat Book 39, Page 85, Dade County Public Records

for public parking and that said lot be placed in Zone P-1.

Section 2. In all other respects said Ordinance is unaffected by this amendment.

Section 3. This Ordinance shall become effective immediately upon its passage.

PASSED and ADOPTED this 14th day of December, 1959.

James H. Allen
Mayor

ATTEST:

Town Clerk

First reading November 23, 1959
Second reading December 14, 1959

Ord 184.29

ORDINANCE NO. 184.30

BE IT ORDAINED BY THE TOWN OF MIAMI SPRINGS:

Section 1. That Section 16 of Ordinance No. 184 of the Town of Miami Springs, be and the same is hereby amended by adding paragraph (h) as follows:

> (h) No application to the Board of Adjustment shall be considered unless the applicant shall have first paid a fee to the Town Clerk in the sum of $10.00 to cover the cost of making the investigations necessary to a consideration of the matter, the mailing of notices and the preparation of such documents for the Building Inspector as may be considered sufficient to facilitate the proper consideration of the application by the Board. At or before the time of the hearing, the applicant shall also submit a recent survey of the property in question showing the boundary lines, together with the boundaries of the proposed additions for which a variance is applied for. In the event the Building Inspector deems it reasonably necessary to a proper consideration of the application he may require the applicant to furnish, in addition to the above matters, a photograph measuring 8" x 10" of the property in question.

Section 2. In all other respects said ordinance is unaffected by this amendment.

Section 3. This ordinance shall become effective immediately upon its passage.

PASSED AND ADOPTED this 27th day of February A. D., 1961.

Billy Wilcox
Mayor

ATTEST:

Town Clerk

ORDINANCE NO. 184.43

AN ORDINANCE TO AMEND ORDINANCE NO. 184 ENTITLED " ZONING ORDINANCE".

BE IT ORDAINED BY THE CITY OF MIAMI SPRINGS:

Section 1: That Ordinance No. 184 and the map accompanying the same be amended in the following respects, that is to say: that upon the adoption of this Ordinance, that it shall be lawful to use the following described property:

> Lot 9 and the Southeasterly 10 feet of Lot 8, Block 1, EAST SPRINGS, a Subdivision according to the plat thereof, recorded in Plat Book 39, Page 25, of the Public Records of Dade County, Florida,

for commercial purposes, and the zoning on Lot 9, Block 1, EAST SPRINGS, a Subdivision according to the plat thereof, recorded in Plat Book 39, Page 35 of the Public Records of Dade County, Florida be and the same is hereby changed from R-2 (Multi-family) to C-1 (Commercial), and the zoning on the Southeasterly 10 feet of Lot 8, Block 1, EAST SPRINGS, a Subdivision according to the Plat thereof recorded in Plat Book 39, Page 35 of the Public Records of Dade County, Florida, be and the same is hereby changed from R-E (Single family) to C-1 (Commercial).

Section 2: In all other respects, said Ordinance is unaffected by this amendment.

Section 3: This Ordinance shall become effective immediately upon its passage.

PASSED AND ADOPTED this 27th day of May, A. D., 1963.

Mayor

ATTEST:

City Clerk

First Reading, May 13, 1963.
Second Reading, May 27, 1963.

Ord No. 184.43

ORDINANCE NO. 184.42

AN ORDINANCE TO AMEND ORDINANCE NO. 184 ENTITLED "ZONING ORDINANCE".

BE IT ORDAINED BY THE CITY OF MIAMI SPRINGS:

Section 1: That Ordinance No. 184 and the map accompanying the same be amended in the following respects, that is to say: that upon the adoption of this Ordinance, that it shall be lawful to use the following described property:

> Lots 19, 20, 21, 22, 23 and 24, Block 130, COUNTRY CLUB ESTATES, SECTION 2, a Subdivision according to the plat thereof, recorded in Plat Book 10, Page 79 of the Public Records of Dade County, Florida,

for multi-family purposes, and the zoning on Lots 19, 20 and 21, Block 130, COUNTRY CLUB ESTATES, SECTION 2, a Subdivision according to the plat thereof recorded in Plat Book 10, Page 79 of the Public Records of Dade County, Florida, be and the same is hereby changed from R-E (Single-family) to R-2 (Multi-family) and the zoning on Lots 22, 23, and 24, Block 130, COUNTRY CLUB ESTATES, SECTION 2, a Subdivision according to the plat thereof recorded in Plat Book 10, Page 79 of the Public Records of Dade County, Florida, be and the same is hereby changed from R-EA (Single-family) to R-2 (Multi-family).

Section 2: In all other respects said Ordinance is unaffected by this amendment.

Section 3: This Ordinance shall become effective immediately upon its passage.

PASSED AND ADOPTED this 27th day of May, A. D., 1963.

John A. Labadie
Mayor

ATTEST:

City Clerk

First Reading, May 13, 1963.
Second Reading, May 27, 1963.

ORDINANCE NO. 184.41

AN ORDINANCE TO AMEND ORDINANCE NO. 184, ENTITLED "ZONING ORDINANCE".

BE IT ORDAINED BY THE TOWN OF MIAMI SPRINGS, FLORIDA:

Section 1. That Ordinance No. 184 and the map accompanying same be amended in the following respects, that is to say: That upon the adoption of this Ordinance, that it shall be lawful to use the following described property:

Lots 1 and 2, Block 44, CINEMA PARK, a Subdivision according to the plat thereof, recorded in Plat Book 17, Page 2 of the Public Records of Dade County, Florida

for multi-family purposes and the zoning on the said property is hereby changed from R-E (single family) to R-2AA (multi-family).

Section 2: In all other respects, said Ordinance is unaffected by this Amendment.

Section 3: This Ordinance shall become effective immediately upon its passage.

PASSED AND ADOPTED this 8th day of October, A.D., 1962.

James H. Allen
Mayor

ATTEST

Town Clerk

First Reading, September 24, 1962

Second Reading, October 8, 1962

ORDINANCE NO. 184.40

AN ORDINANCE TO AMEND ORDINANCE NO. 184, ENTITLED "ZONING ORDINANCE".

BE IT ORDAINED BY THE TOWN OF MIAMI SPRINGS, FLORIDA:

Section 1: That Ordinance No. 184 and the map accompanying same be amended in the following respects, that is to say: That upon the adoption of this Ordinance, that it shall be lawful to use the following described property:

All of Block 3, Addition to Country Club Estates, a Subdivision as recorded in Plat Book 12, Page 25, Public Records of Dade County, Florida

for multi-family purposes and the zoning on the said property is hereby changed from R-E (single-family) to R-2AA (multi-family).

Section 2: In all other respects, said Ordinance is unaffected by this Amendment.

Section 3: This Ordinance shall become effective immediately upon its passage.

PASSED AND ADOPTED this 24th day of September, A.D. 1962.

James H. Allen
Mayor

ATTEST:

Town Clerk

First Reading, September 10, 1962

Second Reading, September 24, 1962

ORDINANCE NO. 184.39

AN ORDINANCE AMENDING CHAPTER 25 OF THE CODE OF ORDINANCES OF THE TOWN OF MIAMI SPRINGS, FLORIDA BY ADDING THERETO SECTION 25-10.1 TO REQUIRE THE ERECTION OF A SAFETY BARRIER AROUND ALL SWIMMING POOLS FOR THE SAFETY AND PROTECTION OF CHILDREN OF PRE-SCHOOL AGE.

BE IT ORDAINED BY THE TOWN OF MIAMI SPRINGS, FLORIDA:

SECTION 1. That Chapter 25 of the Code of Ordinances of the Town of Miami Springs, Florida be and the same is hereby amended by adding thereto Section 25-10.1 so that the same shall read as follows:

SECTION 25-10.1 SWIMMING POOLS AND SAFETY BARRIERS.

(a) SCREENING. Unless the swimming pool is entirely screened in, no final inspection and approval shall be given by the Building Inspector unless there has erected a safety barrier as hereinafter provided.

(b) SAFETY BARRIER. The safety barrier shall take the form of either a completely screened in patio area or a wire fence.

(c) HEIGHT. The minimum height of any fence shall be not less than four (4) feet.

(d) ENCLOSURE. The safety barrier shall be erected either around the swimming pool or around the premises on which the swimming pool is erected; in either event, it shall enclose the swimming pool area entirely, prohibiting unrestrained admittance to the enclosed area.

(e) GATES. Gates shall be of the spring-locking type so that they shall automatically be in a closed position at all times and shall also be equipped with a safe lock.

(f) FENCES. Wire fences shall be of the two inch chain link or diamond weave nonclimable type, or of an approved equal, with a top rail. They shall be of a heavy galvanized material.

(g) PERMITS. Before any work is commenced, permits shall be secured for all swimming pools and for safety barriers. Plans shall contain all details to show compliance with the terms and conditions of these regulations. No swimming pool permit shall be issued unless simultaneously therewith a permit is secured for the erection of the safety barrier; if the premises are already enclosed, as hereinbefore provided, permit for the safety barrier shall not be required, if upon inspection of the premises, the existing barrier is proven to be satisfactory.

(h) EXISTING POOLS. The owner of any swimming pool which shall have been completed prior to the adoption of this Ordinance shall erect the safety barrier herein required within six (6) months of the adoption hereof.

SECTION 2. That Ordinances or parts of Ordinances in conflict herewith are hereby repealed insofar as there is conflict.

SECTION 3. In all other respects, said Code of Ordinances of the Town of Miami Springs, Florida is unaffected by this Amendment.

SECTION 4. This Ordinance shall be incorporated in the Code of Ordinances of the Town of Miami Springs, Florida and shall become effective immediately upon its passage.

PASSED AND ADOPTED this 10th day of September, A. D., 1962.

James D. Allen
Mayor

ATTEST:

Town Clerk

First Reading July 23, 1962

Second Reading September 10, 1962

ORDINANCE NO. 184.38

AN ORDINANCE TO AMEND ORDINANCE NO. 184, ENTITLED "ZONING ORDINANCE,"

BE IT ORDAINED BY THE TOWN OF MIAMI SPRINGS, FLORIDA:

Section 1. That Ordinance No. 184 and the map accompanying same be amended in the following respects, that is to say: That upon the adoption of this Ordinance, that it shall be lawful to use the following described property:

Lot 8, Block 1 and Lots 13 and 18, Block 2, FOUST SUBDIVISION, a Subdivision according to the plat thereof recorded in Plat Book 46, Page 31 of the Public Records of Dade County, Florida

for multi-family purposes and the zoning on the said property is hereby changed from R-1AA (single-family) to R-2 (multi-family).

Section 2. In all other respects, said Ordinance is unaffected by this Amendment.

Section 3. This Ordinance shall become effective immediately upon its passage.

PASSED AND ADOPTED this 9th day of July, A.D. 1962.

James H. Allen
Mayor

ATTEST:

Town Clerk

First Reading, June 25, 1962
Second Reading, July 9, 1962

ORDINANCE NO. 184.37

AN ORDINANCE TO AMEND ORDINANCE NO. 184, ENTITLED "ZONING ORDINANCE".

BE IT ORDAINED BY THE TOWN OF MIAMI SPRINGS, FLORIDA:

Section 1. That Ordinance No. 184 of the Town of Miami Springs, Florida and the map accompanying the same, is hereby amended by changing the zoning classification of the following described property from R-2 (Multi-family) to Commercial (C-1):

> Lots 13, 14, 15 24, and 25, Block 3 EDGEWATER PARK MANOR, a Subdivision as recorded in Plat Book 48, Page 30, Public Records of Dade County, Florida

and the following described property from R-2 (Multi-family) to P-1 (Parking-Only):

> Lot 26, Block 3, EDGEWATER PARK MANOR, a Subdivision as recorded in Plat Book 48, Page 30, Public Records of Dade County, Florida,

subject, however, to the following conditions which the owners of said property, by acceptance of the benefits of this Ordinance agrees to perform, that is to say:

(1) The above property, before it is used for commercial and parking purposes, shall be landscaped along each outside wall of the property with suitable and appropriate shrubbery.

(2) That there shall be no signs of any nature located within the R-2 zoned area.

Section 2. In all other respects, said Ordinance is unaffected by this amendment.

Section 3. This Ordinance shall become effective immediately upon its passage.

PASSED AND ADOPTED this 23rd day of April, 1962.

James H. Allen
Mayor

ATTEST:

Town Clerk

First reading, April 9, 1962
Second Reading, April 23, 1962

ORDINANCE No. 184.36

AN ORDINANCE TO AMEND CHAPTER 25, SECTION 33, SUB-SECTION B OF THE CODE OF ORDINANCES OF THE TOWN OF MIAMI SPRINGS, FLORIDA

BE IT ORDAINED BY THE TOWN OF MIAMI SPRINGS, FLORIDA:

Section 1. That Chapter 25, Section 33, Sub-Section B of the Code of Ordinances of the Town of Miami Springs, Florida is hereby amended and the following is adopted as Chapter 25, Section 33, Sub-Section B, C, and D of the Code of Ordinances of the Town of Miami Springs, Florida:

B. To authorize upon appeal in specific cases such variance from the terms of this chapter as will not be contrary to the public interest where, owing to special conditions a literal enforcement of the provision of the chapter will result in unnecessary hardship, and so that the spirit of the chapter shall be observed and substantial justice done.

C. In excersing the powers set forth in Sub-Section B., the Board shall act on all matters upon a majority vote of those present, a majority of the Board being necessary for a quorum, but less than a quorum may adjourn to a specific time. The Board may reverse or affirm, wholly or partially, or may modify the order, requirement, decision or determination appealed from and may make such order, requirement, decision or determination as ought to be made, and to that end shall have all the powers of the official from whom the appeal is taken.

D. In considering all proposed variations to this chapter, the Board shall before making any finding in a specific case, first determine that the proposed variation will not constitute any change in the districts shown on the zoning may and will not impair an adequate supply of light and air to adjacent property, or materially increase the danger of fire, or materially diminish or impair established property values within the surrounding area, or in any other respect impair the public health, safety, morals and general welfare of the Town.

Section 2. In all other respects, said Code of Ordinances of the Town of Miami Springs, Florida, is unaffected by this amendment.

Section 3. This ordinance shall be incorporated in the Code of Ordinances of the Town of Miami Springs, Florida and shall become effective immediately upon its passage.

PASSED AND ADOPTED this 12th day of March, A. D. 1962.

James H. Allen
Mayor

ATTEST:

Town Clerk

Adopted, First Reading February 26, 1962
Adopted, Second Reading, March 12, 1962

Ord. #184.36

ORDINANCE NO. 184.35

AN ORDINANCE TO AMEND ORDINANCE NO. 184 ENTITLED "ZONING ORDINANCE"

BE IT ORDAINED BY THE TOWN OF MIAMI SPRINGS, FLORIDA:

Section 1. That Ordinance No. 184 of the Town of Miami Springs, Florida and the map accompanying the same is hereby amended by changing the zoning classification of the following described property from R-2 (Multi-family) to P-1 (Parking Only):

Lot 7, Block 75, COUNTRY CLUB ESTATES, Section 1, Plat Book 28, Page 11, Public Records of Dade County, Florida

Section 2: In all other respects, said Ordinance is unaffected by this amendment.

Section 3: This ordinance shall become effective immediately upon its passage.

PASSED AND ADOPTED this 26th day of February, A.D. 1962.

James H. Allen
Mayor

ATTEST:

Town Clerk

First Reading, February 12, 1962.

Second Reading, February 26, 1962

ORDINANCE NO. 184.34

AN ORDINANCE TO AMEND ORDINANCE NO. 184, ENTITLED "ZONING ORDINANCE"

BE IT ORDAINED BY THE TOWN OF MIAMI SPRINGS, FLORIDA.

Section 1. That Ordinance No. 184 and the map accompanying the same, be amended in the following respects, that is to say. That upon the adoption of this ordinance it shall be lawful to use the following described property.

Lot 2, Block 1, Foust Subdivision, a Subdivision according to the plat thereof recorded in Plat Book 46, Page 41, of the Public Records of Dade County, Florida

for multi-family purposes and the Zoning on the said property is hereby changed from R-1AA (single-family) to R-2 (multi-family).

Section 2. In all other respects, said ordinance is unaffected by this amendment.

Section 3. This ordinance shall become effective immediately upon its passage.

PASSED AND ADOPTED this 12th day of February, A. D. 1962.

James H. Allen
Mayor

ATTEST:

Town Clerk

Adopted on First Reading - January 22, 1962

Adopted on Second Reading - February 12, 1962

ORDINANCE NO. 184.33

AN ORDINANCE AMENDING ORDINANCE NO. 184 ENTITLED "ZONING ORDINANCE."

BE IT ORDAINED BY THE TOWN OF MIAMI SPRINGS:

Section 1. That Ordinance No. 184 of the Town of Miami Springs and the map accompanying the same is hereby amended by changing the use classification of the following described property from R-2, (Multi-family) to C-1 (Commercial):

Lots 13 and 14, Block 1, Edgewater Park Manor, according to the Plat thereof, recorded in Plat Book 48, page 30, Dade County Public Records.

Section 2. In all other respects, said ordinance is unaffected by this amendment.

Section 3. This ordinance shall become effective immediately upon its passage.

PASSED AND ADOPTED this 11th day of December, A. D. 1961.

James H. Allen
Mayor

ATTEST:

Town Clerk

Adopted on First Reading - November 27, 1961

Adopted on Second Reading - December 11, 1961.

ORDINANCE NO. 184.32

AN ORDINANCE TO AMEND ORDINANCE NO. 184., ENTITLED "ZONING ORDINANCE"

BE IT ORDAINED BY THE TOWN OF MIAMI SPRINGS:

Section 1. That Ordinance No. 184 of the Town of Miami Springs and the map accompanying the same, is hereby amended by adding the following paragraphs to Paragraph (h) of Section 10 (Multiple-family district R-2 AA) and Paragraph (h) of Section 11 (Multiple-family district R-2):

a. The minimum front footage of a building site shall be 75 feet.

b. The total land that may be occupied by a structure, shall not exceed 40% of the total land area to be occupied.

Section 2. In all other respects, said ordinance is unaffected by this amendment.

Section 3. This ordinance shall become effective immediately upon its passage.

PASSED AND ADOPTED this 11th day of December, A. D. 1961.

James H. Allen
Mayor

ATTEST:

Town Clerk

First reading, November 27, 1961

Second reading, December 11, 1961.

ORDINANCE NO. 184.31

AN ORDINANCE TO AMEND ORDINANCE NO. 184 ENTITLED "ZONING ORDINANCE"

BE IT ORDAINED BY THE TOWN OF MIAMI SPRINGS:

Section 1: That Ordinance No. 184 of the Town of Miami Springs and the map accompanying the same, is hereby amended by changing the use classification of the following described property from R-2 (Multi-family) to P-1 (Parking Only):

"Lots 16 and 17, Block 63, COUNTRY CLUB ESTATES, Section 1, Plat Book 28, Page 11, Public Records of Dade County, Florida.

subject, however, to the following conditions which the owner of said property by the acceptance of the benefits of this ordinance agrees to perform, that is to say:

(1) The above property, before it is used for parking purposes, shall be enclosed with a decorative block wall which shall be set back not less than ten feet from the property line on Canal Street;

(2) Ingress and egress to the property is to be afforded by a drive-way not more than ten feet in width;

(3) The said property shall be paved with asphalt and concrete mix and adequate drainage provided in accordance with the specifications on file in the Town Clerk's office; and,

(4) Upon the completion of the above improvements, suitable and appropriate shrubbery will be planted along the wall on Canal Street."

Section 2. In all other respects said ordinance is unaffected by this amendment.

Section 3. This ordinance shall become effective immediately upon its passage.

PASSED AND ADOPTED this 9th day of October, 1961.

Billy Wilson
Mayor

ATTEST:

Town Clerk

First Reading, September 25, 1961
Second Reading, October 9, 1961.

ORDINANCE 599-77

AN ORDINANCE AMENDING CHAPTER 25 OF THE CODE OF ORDINANCES; ZONING; SECTION 25-1, SUBSTITUTING CITY FOR TOWN; COMPLYING WITH THE PROVISIONS OF THE CHARTER OF THE CITY OF MIAMI SPRINGS ADOPTED APRIL 1, 1975; AMENDING SECTION 25-2 DEFINITIONS, REPEALING GENERAL DEFINITIONS, ADOPTING DEFINITIONS CONTAINED IN SOUTH FLORIDA BUILDING CODE AND SOUTHERN STANDARDS BUILDING CODE, GENERAL RULES OF CONSTRUCTION, ACCESSORY BUILDING, ACCESSORY STRUCTURE, ADOPTING ALCOHOLIC BEVERAGE DEFINITIONS DEFINED BY SECTION 561.01(7) FLORIDA STATUTES, ALLEY, APARTMENT BUILDING, APARTMENT HOTEL, AWNING, BAR, BASEMENT, BOARDING HOUSE, BREEZEWAY, BUILDABLE WIDTH, BUILDING, BUILDING HEIGHT, GENERAL BUILDING SITE DEFINITIONS AND MEASUREMENTS, CANOPY, CARPORT, CLINIC, PRIVATE CLUB, COURT, DISTRICTS, DWELLINGS, FAMILY, FENCE, FILLING STATION, FLOOR AREA, PRIVATE GARAGE, STORAGE GARAGE, GRADE, GUEST HOUSE, HEDGE, HEIGHT OF BUILDING, HOME OCCUPATION, NURSING AND CONVALESCENT OR EXTENDED CARE HOMES, HOSPITAL, HOTEL, MEZZANINE, MOTEL, MOTOR COURT, TOURIST COURT OR MOTOR LODGE, NONCONFORMING BUILDING OR STRUCTURE, NONCONFORMING USE, OFF-STREET PARKING, PARKING SPACE, PREMISES, SCREEN, SERVANTS QUARTERS, SERVICE STATION, SIGN, STREET, STRUCTURE, STRUCTURAL ALTERATIONS, UNPLATTED LAND, TRAILER, VARIANCE, VEHICLE, COMMERCIAL VEHICLE, WALL, YARDS, RENUMBERING ALL SECTIONS AND SUBSECTIONS OF CHAPTER 25 AMENDED OR REENACTED; AMENDING SECTION 25-3, ESTABLISHMENT OF DISTRICTS, INTERPRETATION OF DISTRICT BOUNDARIES; REPEALING SECTION 25-3.1, RIGHT-OF-WAY WIDTHS FOR CERTAIN STREETS; REPEALING SECTION 25-5, SAME - ALCOHOLIC BEVERAGES; AMENDING SECTION 25-6, AIRPORT BUILDING RESTRICTIONS; AMENDING SECTION 25-7, BUILDING PERMITS AND OCCUPANCY PERMITS; AMENDING SECTION 25-7.1, DESIGNATED STREET FRONTAGE REQUIRED FOR CONSTRUCTION OF DWELLING; AMENDING SECTION 25-8, CONSTRUCTION MATERIALS; AMENDING SECTION 25-8.1, ROOF MATERIALS; ENACTING SECTION 25-8.2, UTILITY SHEDS; AMENDING SECTION 25-9, FIRST FLOOR ELEVATIONS; AMENDING SECTION 25-10, FENCES, LANDSCAPING AND BOUNDARY WALLS; AMENDING SECTION 25-10.1, SWIMMING POOLS AND SAFETY BARRIERS; AMENDING SECTION 25-10.2, PARKING COMMERCIAL VEHICLES IN RESIDENTIAL DISTRICTS; AMENDING SECTION 25-10.3, OFF-STREET PARKING FACILITIES, LANDSCAPING STANDARDS; AMENDING SECTION 25-10.4, USE OF TRAILERS, HOUSE CARS, ETC. AS LIVING OR SLEEPING QUARTERS, STORAGE REQUIREMENTS, PENALTY FOR VIOLATION; ENACTING SECTION 25-10.5, PARKING OF RECREATIONAL VEHICLES; AMENDING SECTION 25-12, SUBDIVISION'S PLAT, APPROVAL, REPEALING SECTIONS 25-13, SIGNS; SECTION 25-13.1, NONCONFORMING SIGNS; SECTION 25-14, SAME - PROHIBITIONS; SECTION 25-15, SAME - MAINTENANCE, CONSTRUCTION REQUIREMENTS; ENACTING SECTION 25-13, SIGNS - DETERMINATION OF AREA, CLASSIFICATION; ENACTING SECTION 25-13.1, NONCONFORMING SIGNS; ENACTING SECTION 25-13.2, SIGNS -

PROHIBITIONS; ENACTING SECTION 25-13.3, SIGNS, LOCATIONS, SIZE, PURPOSES AND LIGHTING, GENERAL SIGN REGULATIONS; ENACTING SECTION 25-13.4, ZONING DISTRICT SIGN REGULATIONS; AMENDING SECTION 25-16, VISION CLEARANCE AT INTERSECTIONS; REPEALING SECTION 25-17, PUBLIC PROPERTY DISTRICT, P; REPEALING SECTION 25-18, CHURCH USE ONLY; AMENDING SECTION 25-18.1 AND RENUMBERING SAID SECTION 25-14, GREENHOUSES IN RESIDENTIAL DISTRICTS; AMENDING SECTION 25-19 AND RENUMBERING SAID SECTION 25-15, SINGLE FAMILY DISTRICT R-1A, USES, SIGNS, HEIGHT, SITE AREA, FRONT YARD, SIDE YARD, REAR YARD, FLOOR AREA, OFF-STREET PARKING REQUIREMENTS; AMENDING SECTION 25-20 AND RENUMBERING SAID SECTION 25-16, SAME - R-1B, USES, SIGNS, HEIGHT, SITE AREA, FRONT YARD, SIDE YARD, REAR YARD, FLOOR AREA, OFF-STREET PARKING REQUIREMENTS; AMENDING SECTION 25-21 AND RENUMBERING SAID SECTION 25-17, SAME - R-1C, USES, SIGNS, HEIGHT, SITE AREA, FRONT YARD, SIDE YARD, REAR YARD, FLOOR AREA, OFF-STREET PARKING; AMENDING SECTION 25-22 AND RENUMBERING SAID SECTION 25-18, SAME - R-1D, USES, SIGNS, HEIGHT, SITE AREA, FRONT YARD, SIDE YARD, REAR YARD, FLOOR AREA, OFF-STREET PARKING; AMENDING SECTION 25-19, DUPLEX DISTRICT - R-2, USES, SIGNS, HEIGHT, SITE AREA, FRONT YARD , SIDE YARD, REAR YARD, FLOOR AREA, OFF-STREET PARKING; AMENDING SECTION 25-24 AND RENUMBERING SAID SECTION 25-20, MULTIPLE FAMILY DISTRICT - R-3A, USES, SIGNS, PARKING, HEIGHT, SITE AREA, FLOOR AREA, FRONT YARD, SIDE YARD, REAR YARD, PROTECTIVE SCREENING; ENACTING SECTION 25-21, SAME - R-3B, USES, SIGNS, OFF-STREET PARKING, HEIGHT, SITE AREA, FLOOR AREA, FRONT YARD, SIDE YARD, REAR YARD, PROTECTIVE SCREENING; AMENDING SECTION 25-25.1 AND RENUMBERING SAID SECTION 25-21.1, SAME - R-3C, USES, SIGNS, OFF-STREET PARKING, HEIGHT, SITE AREA, FLOOR AREA, FRONT YARD, SIDE YARD, REAR YARD, PROTECTIVE SCREENING, PARKING REGULATIONS; AMENDING SECTION 25-26 AND RENUMBERING SAID SECTION 25-22, NEIGHBORHOOD COMMERCIAL - B-1, USES, SIGNS, PARKING, HEIGHT, SITE AREA, FRONT YARD, SIDE YARD, REAR YARD, FLOOR AREA, PROTECTIVE SCREENING, COMMERCIAL INSTALLATIONS FOR BUSINESS PURPOSES TO NOT INCLUDE MIXED USE FOR LIVING QUARTERS; AMENDING SECTION 25-27 AND RENUMBERING SAID SECTION 25-23, CENTRAL BUSINESS DISTRICT, B-2, USES, SIGNS, PARKING, HEIGHT, SITE AREA, FRONT YARD, SIDE YARD, REAR YARD, FLOOR AREA, PROTECTIVE SCREENING, COMMERCIAL INSTALLATIONS FOR BUSINESS PURPOSES TO NOT INCLUDE MIXED USE FOR LIVING QUARTERS; AMENDING SECTION 25-27.1 AND RENUMBERING SAID SECTION 25-24, ARTERIAL BUSINESS DISTRICT, B-3, USES, SIGNS, PARKING, HEIGHT, SITE AREA, FRONT YARD, SIDE YARD, REAR YARD, FLOOR AREA, PROTECTIVE SCREENING, LIMITATIONS AND SPECIAL REQUIREMENTS, COMMERCIAL INSTALLATIONS FOR BUSINESS PURPOSES TO NOT INCLUDE MIXED USE FOR LIVING QUARTERS; AMENDING SECTION 25-27.2 AND RENUMBERING SAID SECTION 25-25, PROFESSIONAL OFFICE DISTRICT, O-1, USES, SIGNS, PARKING, HEIGHT, SITE AREA, FRONT YARD, SIDE YARD, REAR

YARD, FLOOR AREA, PROTECTIVE SCREENING, COMMERCIAL INSTALLATIONS FOR BUSINESS PURPOSES TO NOT INCLUDE MIXED USE FOR LIVING QUARTERS; REPEALING SECTION 25-27.3, SCHOOL USE ONLY, SU-2; ENACTING SECTION 25-26, PUBLIC PROPERTY DISTRICT - P-1, PURPOSE, USES, LOT AREA, WIDTH, YARDS, HEIGHT, SIGNS, PARKING, LIMITATIONS AND SPECIAL REQUIREMENTS; ENACTING SECTION 25-27, CHURCH USE ONLY - P-2 DISTRICT, USES, HEIGHT, SITE, FRONT, REAR AND SIDE YARDS, SIGNS, PARKING; REPEALING SECTION 25-28, NONREVENUE OFF-STREET PARKING ZONE P-1; AMENDING SECTION 25-29 AND RENUMBERING SAID SECTION 25-28, NON-CONFORMING USES; AMENDING SECTION 25-30 AND RENUMBERING SAID SECTION 25-29, ZONING AND PLANNING BOARD APPOINTMENT, TERMS, VACANCY; ASSIGNING SECTION NUMBER AND AMENDING SECTION 25-29.1, SAME - DUTIES; AMENDING SECTION 25-31 AND RENUMBERING SAID SECTION 25-30, JURISDICTION AND POWERS; AMENDING SECTION 25-31.1 BY RENUMBERING SAID SECTION 25-30.1, FEES; AMENDING SECTION 25-31.2 AND RENUMBERING SAID SECTION 25-30.2, PETITION FOR ZONING CHANGE; AMENDING SECTION 25-32 AND RENUMBERING SAID SECTION 25-31, BOARD OF ADJUSTMENT - APPOINTMENT, TERMS, VACANCY; AMENDING SECTION 25-33 AND RENUMBERING SAID SECTION 25-32, SAME - APPEALS; AMENDING SECTION 25-33.1 AND RENUMBERING SAID SECTION 25-32.1, SAME - FEES; AMENDING SECTION 25-33.2, SAME - ACTIONS SUBJECT TO CITY COUNCIL, FEES; AMENDING SECTION 25-35, AMENDMENTS, HEARING, NOTICE; AMENDING SECTION 25-36, ENFORCEMENT, VIOLATIONS; AMENDING SECTION 25-37, ADMINISTRATIVE BUILDING MORATORIA; AMENDING SECTION 25-38, OTHER BUILDING MORATORIA; RE-ENACTING ALL SECTIONS OF CHAPTER 25 NOT OTHERWISE AMENDED BY THIS ORDINANCE; REPEALING ALL ORDINANCES OR PARTS OF ORDINANCES IN CONFLICT; SEVERABILITY; EFFECTIVE DATE

BE IT ORDAINED by the City Council of the City of Miami Springs, Florida:

ZONING ORDINANCE OF THE CITY OF MIAMI SPRINGS, FLORIDA

Sec. 1: That Section 25-1 of the Code of Ordinances be and the same is hereby amended as follows:

Sec. 25-1. Purposes and authority.

A. The ~~Town~~ City of Miami Springs is hereby divided into zones as is hereinafter more particularly set forth and as further appears upon the map of said ~~town~~ city as adopted by reference by section 25-3 ~~(a)~~ B hereof; and there is hereby adopted and established a comprehensive master zoning plan for the ~~town~~ city for the purpose of accomplishing, among other things, the objects outlined in the ~~town~~ city charter and the following purposes: In consideration, among other things, of lessening congestion in the streets, regulating traffic, securing safety from fire, storm, panic and other dangers; conserving or providing adequate light and air; establishing, maintaining or preserving aesthetic values; preventing the over-

crowding of land; avoiding the undue concentration of population or facilitating the furnishing of operation of facilities for transportation, water, sewage, schools, parks and other public improvements or conveniences; to regulate and restrict the location, height, number of stories, size, cubic contents, construction and area of buildings and other structures, (including billboards and advertising devices); the percentage and portion of lots and land that may be occupied or built on; the size of yards, courts, or other open spaces; the density of population; the use of buildings, structures and land for trade, industries, residences, apartment hourses and all or any other purposes; the platting, re-platting, resubdividing and use of unplatted lands; for any of the above said purposes, in promoting the safety, health, comfort, morals, convenience, peace, prosperity, appearances, or general welfare of the ~~town~~ city or its inhabitants; to divide the ~~town~~ city into zones or such number, shapes and areas, as may be deemed best suited to effectuate the purposes of this section and within such zones to regulate and restrict the erection, construction, re-construction, alteration, repair, destruction or removal of buildings, land, or structures, including billboards and signs; all in accordance with a comprehensive ~~plan; there is hereby adopted and established an official~~ master zoning plan for the ~~Town~~ City of Miami Springs.

B. This plan is adopted pursuant to the authority ~~conferred upon the town by its Charter~~ of Article 8, Sec. 2B of the State of Florida and the Charter of the City of Miami Springs as adopted April 1, 1975.

Sec. 2: That Section 25-2 of the Code of Ordinances be and the same is hereby amended as follows:

Sec. 25-2. Definitions.

~~(1) In general. For the purpose of this chapter, certain terms and words are hereby defined; and these following definitions shall apply in the enforcement of the regulations herein; the terms board of adjustment, zoning and planning board, and building inspector shall mean such authorities, bodies or authorized representatives of the town; the word "shall" is mandatory and not directory; and the verb "use" shall include cause to be used, permit to be used, or arrange, design or intended to be used or occupied.~~

A. All of the definitions contained in the South Florida Building Code & Southern Standards Building Code are adopted except where the definitions contained in this section are more restrictive than those contained in these Codes, in which case the definitions set forth in this chapter shall prevail.

(1) General Rules of Construction.

The following general rules of construction shall apply to the regulations of this ordinance:

(a) The singular number includes the plural and the plural the singular, unless the context clearly indicates the contrary.

(b) Words used in the present tense include the past and future tenses, and the future the present.

(c) The word "shall" is mandatory; the word "may" is permissive.

(d) The word "building" or "structure" includes any part thereof and the word "building" includes the word "structure".

(e) The word "lot" includes the words "plot" or "parcel" or "tract" or "premises".

(f) The words "used" or "occupied" include the words "intended", "designed" or "arranged" to be used or occupied.

(g) The terms "board of adjustment", "zoning and planning board" and "building inspector", shall mean such authorities, bodies, or authorized representatives of the City.

(h) Words and terms not defined herein, shall be intreproted in accordance with their normal dictionary meaning and customary usage.

(2) Accessory building: A subordinate building in a rear yard, detached from the main building and on the same premises as an existing main building, the use of which is clearly incidental and pertaining to that of the dominant use of the main building or land. An accessory use is one which is incidental to the main use of the premises.

(3) Accessory structure. Any structure not forming an integral part of the main building, but ~~pertaining to~~ which is customary and pertains to and is incidental to the use of the main building or land.

(4) Alcoholic Beverage: As defined by Sec. 561.01(7) Florida Statutes.

~~(4)~~(5) Alley. A dedicated way not ordinarily used for general traffic, which affords a secondary means of access for service to property abutting thereon.

~~(5)--Apartment-house.--See-"dwelling,-multiple".~~

(6) Apartment Building: A building which is used as a residence for three or more families living in separate dwelling units, but not to include hotels. See "Dwelling Units."

(7) Apartment Hotel: A building designed for or containing both apartments and individual guests rooms or rental units under resident supervision and which maintains an inner lobby through which all tenants must pass to gain access to apartments, rooms or units.

(8) Awning: A detachable, roof-like cover, supported from the walls of a building for protection from sun and weather.

(9) Bar: Any place devoted to selling or dispensing and drinking alcoholic beverages, or any place where a sign is displayed indicating that alcoholic beverages are obtainable for consumption on the premises.

(10) Basement: That portion of a building between floor and ceiling which has at least two feet of its height below the grade of the adjoining ground and the ceiling of which is not more than four feet six inches above grade.

~~(6)~~ (11) Boardinghouse: A building other than an apartment hotel, a hotel, motel, or motor lodge where, for compensation ~~pursuant to previous arrangement~~ and by prearrangement, ~~meals or lodging and meals~~ for definite periods, lodging, meals, or lodging and meals are provided for three or more persons, ~~not members of the household~~ but not exceeding 12 persons.

(12) Breezeway: A covered passage, open at each end, which passes through a house, (or between two structures), increasing ventilation and adding an outdoor living effect.

(13) Buildable Width: The width of the lot left to be built upon after the required side yards are provided.

~~(7)~~ (14) Building: Any permanent structure attached to the real estate and having a roof, designed or built for the support, enclosure, shelter, or protection of persons, animals, chattels, or property of any kind.

~~(8)~~ (15) Building, height of. The vertical distance from the grade to the highest point of the coping of a flat roof or to the deck line of a mansard roof, or to the mean height level between eaves and ridge for gable, hip, and gambrel roofs.

~~(9)~~ (16) Building Site: Premises upon which a building is to be located, consisting of a lot or contiguous lots plus portions of lots, but in no case less than one complete unit of platted land.

(a) Area: The total horizontal area within the lot lines of the lot.

(b) Corner: A lot abutting upon two or more streets at their intersection.

(c) Coverage: The percentage of the total area of a lot that, when viewed directly from above, would be covered by all principal and accessory buildings and structures, or portions thereof; provided, however, that open balconies, awnings and porte-cocheres shall not be included in determining the building area.

(d) Depth: The mean horizontal distance between the front and rear lot lines.

(e) Front: The front of a lot shall be construed to be the portion nearest the street. For corner lots, the lot front shall be the narrowest portion abutting the street, unless determined otherwise by the Planning & Zoning Director.

(f) Frontage: The distance for which the front lot line and the street line are coincident.

(g) Interior: A lot, other than a corner.

(h) Through (Double Frontage): Any lot having frontages on two parallel or approximately parallel streets.

(i) Key: An interior lot having its side lot lines coincident on one or both sides with the rear lot lines of adjacent lots.

(j) Line: The boundary line of a lot. On waterfront lots the established bulkhead line or where the bulkhead line has not be established, the mean high water line shall be construed to be a lot line.

(k) Width: The horizontal distance between the side lot lines measured at the required front yard line and parallel to the front street line.

(17) Canopy: A detachable, rooflike cover, supported from the ground or deck or floor of a building, and from the walls of a building, for protection from sun or weather.

(18) Carport: A canopy, rooflike structure or shed, open on at least two sides and attached to the main building for the purpose of providing shelter for one or more motor vehicles.

(19) Clinic: An establishment where patients are not lodged overnight, but are admitted for examination and treatment by a group of physicians or dentists practicing medicine or dentistry together. The term does not include a place for the treatment of animals.

(20) Club, Private: Buildings and facilities or premises used or operated by an organization or association for some common purpose, such as, but not limited to, a fraternal, social, educational or recreational purpose, but not including clubs organized primarily for profit or to render a service which is customarily carried on as a business. Such organizations and associations shall be incorporated under the Laws of Florida as a non-profit corporation and such corporations' major purpose shall not be for the purpose of serving alcoholic beverages to its members or others.

~~(10)~~(21) Court: A space other than a yard, on the same lot as a single building or an arrangement of related buildings, which space is open, unobstructed and unoccupied except for such things as trees, shrubs, fountains, statuary, walks and ways, as provided herein and it may or may not have street access.

~~(11)~~(22) District: Any section or area of the ~~town~~ city so identified and delineated on the official district zoning map for which the zoning regulations governing the use of buildings and premises, the height of buildings, the size of yards, and the intensity of use are uniform.

(a) (R) District: Any single or multiple family residential district.

(b) ~~(C)~~(B) District: Any business or commercial district.

(c) (O) District: Any professional office district.

(d) (P) District: Any district composed of lands dedicated to the use of the public, and lands owned or controlled by a federal, state, county or municipal body or board for public purpose and lands devoted to parking purposes.

~~(12)~~(23) Dwelling: Any building or portion thereof, ~~which is~~ attached to real estate, designed exclusively for ~~or used for~~ use as permanent ~~residential~~ living ~~purposes~~ quarters.

~~(13)~~(24) Dwelling: Single Family: A building designed for or occupied exclusively by one family.

(25) Dwelling, Single Family Detached: A single family dwelling, on the same lot as another dwelling or dwellings, surrounded by yards or other open spaces. Also see nonconforming buildings and structures.

~~(14)~~(26) Dwelling, Multiple Family: A building designed for or occupied ~~exclusively~~ by ~~two~~ three or more families.

(27) Dwelling, Two Family (Duplex): A building designed for or occupied exclusively by two families.

(28) Dwelling Unit: A room, or group of rooms, occupied or intended to be occupied as separate living quarters by one family and containing independent cooking and sleeping facilities.

~~(15)~~(29) Family: One or more persons, related by blood, marriage or other such legal relationships, occupying a dwelling and living as a single housekeeping unit, as distinguished from a group occupying a boardinghouse, ~~lodginghouse~~, or hotel, as herein defined.

(30) Fence: A linear structure more or less permanent, erected for a purpose, not to include hedges or walls and controlled by height and materials when constructed on boundary lines.

(31) Filling Station: (See Service Station).

~~(14)~~(32) Floor Area: ~~The area enclosed within the outside perimeter of a building, less one-half the area of any attached garage, carport, or porch.~~ The sum of the gross horizontal areas of the several floors of a building or buildings. Exclusions:

(a) Accessory water tanks or cooling towers.

(b) Uncovered steps and exterior balconies.

(c) Attic space, whether or not a floor actually has been laid, providing structural headroom of less than seven feet, six inches.

(d) Terraces, breezeways, screen enclosures, or open porches.

(e) Floor space used for permitted or required accessory off-street parking spaces, located not more than twenty (20) feet above grade in any building except single-family and two-family dwellings or buildings accessory thereto.

(33) Garage, Private: An accessory building or a portion of the main building, designed or used for the parking of private passenger vehicles by the occupants of the main building.

~~(17)~~(34) Garage, Storage: A building or portion thereof designed or used exclusively for long or short term storage of private automobiles, boats or other private recreational vehicles, and at which motor fuels and oils are not sold, and motor-driven vehicles are not equipped, repaired, hired, or sold.

~~(18)~~(35) Grade: That certain elevation established by the Dade County Engineer's Office for any given area in the City of Miami Springs, ~~town, and shown on the official map of the Town of Miami Springs~~ entitled "Minimum Fill Elevations" ~~and dated October 30, 1950 as amended which map is on file in the office of the town clerk,~~ in effect on the date of this ordinance or as it may be hereafter adopted or amended.

~~(19)~~(36) Guest house. ~~An accessory building located on the same lot as the main building, not occupied the year round, and used exclusively for the accomodations of guests of the occupant or owner of the main building.~~ Living quarters within a detached accessory building located on the same lot with the main building, not occupied year-round by temporary guests of the occupants of the premises, such quarters having no kitchen facilities or separate utility meters and not rented or otherwise used as a separate dwelling.

(37) Hedge: A lineal growth of vegetation, not exceeding the height of (6') six feet, planted or cultivated for a purpose.

~~(8)~~ (38) Height of Building: The vertical distance from the grade to ~~the highest point of the coping of a flat roof or to the deck line of a mansard roof, or to the mean height level between eaves and ridge for gables, hip and gambrel roofs.~~

(a) the highest point of a flat roof;

(b) the deck line of a Mansard roof;

(c) the average height between eaves and ridge for gable, hip, and gambrel roofs; or

(d) the average height between high and low points for a shed roof.

(39) Home Occupation: Any occupation within a dwelling carried on by a member of a family residing on the premises, provided that no person not a resident of the premises is employed, no stock in trade is kept or commodities sold, no mechanical equipment is used except such that is normally used for family, domestic, or household purposes, and there is no exterior indication, other than a sign permitted by the district regulations, that the building is being used for any purpose other than a dwelling. (See Signs.)

(40) Homes, Nursing & Convalescent or Extended Care:

(a) Nursing Homes is a facility providing long-term care of the chronically ill, the physically disabled and the aged who are unable to care for themselves.

(b) Convalescent Home or Extended Care Facility is a facility for the care of persons recovering from illness or surgery who do not need the intensive care of the general hospital but are not yet well enough to go home.

(41) Hospital: A building or group of buildings, having room facilities for overnight patients, used for providing services for the in-patient medical or surgical care of sick or injured persons and which may include related facilities, central service facilities, and staff officers; provided, however, that such related facility must be incidental and subordinate to the main use and must be an integral part of the hospital operations. Hospital-related facilities include Nursing Homes and Convalescent Homes or Extended Care Facilities.

~~(20)~~ (42) Hotel: A building in which lodging or boarding and lodging are provided and offered to the public for compensation, and in which ingress and egress to and from all rooms ~~is~~ are made through ~~one~~ an inside lobby or ~~foyer~~ office ~~which is normally~~ supervised by a person in charge at all ~~hours~~ times. As such, a hotel is open to the public, distinguished from a boarding or lodging house, apartment hotel, or multiple dwelling.

~~(21)--Lodging-house.--A-building-other-than-a-hotel-where lodging-for-three-or-more-persons,-not-members-of the-household,-is-provided-for-compensation-pursuant-to-arrangement.~~

~~(22)--Lot.--A-unit-of-platted-land-with-frontage-on-a street.~~

~~(23)--Main-building.--Any-building,-permitted-under this-chapter,-that-is-not-an-accessory-building.~~

~~(24)--Masonry-construction.--Construction-in-which-all exterior-walls-from-foundation-to-roof-are-of masonry-and/or-reinforced-concrete,-poured-in place,--interior-partitions,-floor-and-roof framing-may-be-of-wood.--Wood-trim-may-be-added to-exterior-when-properly-affixed-to-masonry, but-not-in-substitution-therefor-or-to-take-the place-of-masonry-walls.~~

(43) Mezzanine: An intermediate floor in any story or room with floor area, not exceeding one-third the total floor area in that room or story in which the mezzanine occurs and with clear height above or below the mezzanine floor construction not less than seven feet.

~~(25)~~ (44) ~~Motor-court-or-motel.~~ Motel, Motor Court, Tourist Court or Motor Lodge. ~~A-building-or-a-group-of buildings-on-the-same-lot-or-occupying-a-contiguous land-area-usually-arranged-around-a-court-containing sleeping-accomodations,-but-no-facilities-for cooking,-and-having-ingress-and-egress-to-the rooms-other-than-through-an-inside-lobby-or-foyer, in-contradistiction-to-a-hotel.~~ A building in which lodging, or boarding and lodging are provided and offered to the public for compensation. As such, it is open to the public as distinguished from a boarding or lodging house, or a multiple dwelling; same as a hotel, except that the buildings are usually designed to serve tourists traveling by automobile, ingress and egress to rooms need not be through a lobby or office, and parking usually is adjacent to the dwelling unit.

(45) Nonconforming Building or Structure: A building or structure which is not in compliance with the zoning requirements of the district classification in which it is located.

~~(26)~~ (46) Nonconforming use. The use of a building or portion thereof, or land or portion thereof, which use does not conform with the use ~~regulations~~ requirements of the district in which it is situated.

~~(27)~~ (47) Parking, off-street. Parking spaces entirely on the premises and not extending into streets, alleys, or other public ways.

~~(28)~~ (48) Parking space. An area of not less than ten feet by twenty-two feet per vehicle, paved with ~~asphaltic concrete~~ asphalt, concrete, or other material approved by the Building Dept., and striped, exclusive of driveway for ingress and egress. On diagonal parking, the ten foot width shall be measured at right angles between the parallel lines.

~~(29)--Platted-land;--Any-land;-a-diagram-of-which-has been-recorded-by-plat-in-the-Dade-County-Circuit Court-Clerk's-Office.~~

~~(30)~~(49) Premises. Any lot, plat, parcel, or tract of land which is or may, under ~~the-terms-of~~ this chapter, be occupied or used as the location of a structure.

(49.5) Recreational vehicles. Campers, racing cars, trailers, buggies, air boats, boats, boat trailers, airplanes, and any other similar combinations generally classified and used as recreational vehicles.

~~(31)--Resubdivided.--Lands,-previously-platted-and subsequently-redivided,-being-divided-into smaller-parcels-of-land-to-be-used-as-lots-or individual-building-sites.~~

(50) Screen: A lineal structure more or less permanent, erected or planted for privacy, aesthetics and limiting view; and which shall be constructed of a growth of vegetation, certified redwood, metal, concrete or other similar materials and which shall not exceed six (6') feet in height and which shall not impede ventilation of the adjacent property.

~~(32)~~(51) Servants Quarters. An acce-sory residential building designed to be occupied by not more than two (2) employees of the occupant of the main building. Such quarters shall not include kitchen, or cooking and eating facilities.

(52) Service Station: Any building, structure, or land used for the retail sale of motor vehicle fuels, oils and accessories, and the servicing or repairing of minor parts and accessories, but not including major repair work, such as motor replacement, body and fender repair, or spray painting and excluding public garages.

~~(33)~~(53) Sign. Any display of characters, letters, illustrations, or any ornamentation designed as an advertisement, announcement, or to indicate direction or location.

~~(34)~~(54) Street. A public thoroughfare which affords the principal means of access to abutting property.

~~(35)~~(55) Structure: Anything constructed or erected, the use of which requires more or less permanent location on the ground, or attached to something having a permanent location on the ground, including but without limiting the generality of the foregoing: advertising signs, billboards, back stops for tennis courts, fences, walls, and pergolas, and screen enclosures.

~~(36)~~(56) Structural alterations: Any change in the supporting members of a building, such as bearing walls or partitions, columns, beams or girders, or any substantial change in the roof or in the exterior walls, excepting such repair or replacement as may be required for the safety of the building.

~~(37)~~(57) Unplatted land: Any land that is not depicted by plat recorded in the Dade County Circuit Court Clerk's Office.

(58) Trailer: Any vehicle which is not propelled and which is designed to be towed by a motorized vehicle.

(59) Variance: A variance is a relaxation of certain regulations contained in this Ordinance where such variance will not be contrary to the public interest and where, owing to conditions peculiar to the property and not the result of the actions of the applicant, a literal enforcement of the Ordinance would result in unnecessary and undue hardship.

~~(58)~~(60) Vehicle: A conveyance for persons or material.

(61) Vehicle, Commercial: The term "commercial vehicle" as herein used shall mean a vehicle not designated exclusively for the transportation of persons.

(62) Wall: Boundary or decorative, solid or semi-open lineal structure, of concrete block, stone or other such material erected for a purpose and not exceeding four (4) feet in height.

~~(59)~~(63) Yard. Any space between a main building and the adjacent lot lines. In measuring a yard for the purpose of determining the width of a side yard, or the depth of a front yard, or the depth of a rear yard, the minimum horizontal distance between the lot line and the nearest part of the main building shall be used.

~~(40)~~(64) Yard, front. A yard extending across the front of a lot and being the minimum horizontal distance between the front lot line and the nearest part of the main building, other than the usual uncovered steps, or stoops. On corner lots the front yard shall be considered as adjacent to the street upon which the lot has its least dimension.

~~(41)~~(65) Yard, rear. A yard extending across the rear of a lot and being the required minimum horizontal distance between the rear lot line and the rear of the nearest part of the main building. Eaves or overhangs may extend into any minimum rear yard setback, but shall not extend more than thirty (30) inches into such minimum rear yard set-back, or closer than three (3) feet to the rear property line. Stoops and steps may extend into any minimum rear yard set-back, but shall not extend more than thirty-six (36) inches into such minimum rear yard set-back, or closer than three (3) feet to rear property line. Any portable air conditioning unit, whether installed through the wall or set into a window, may extend into the minimum rear yard set-back. No portion of a central air conditioning or heating unit shall be located in any minimum rear yard set-back area. Window awnings and shutters may extend into any minimum rear yard set-back. No other structures than those specifically permitted above, shall be constructed or erected in any minimum rear yard set-back. On all lots, the rear yard shall be that portion opposite and most distant from the front yard.

~~(42)~~ (66) Yard, Side: A yard between the main building and the side line of the lot, and extending from the required front yard to the required rear yard, and being the minimum horizontal distance between a side lot line and the side of the nearest part of the main building. Eaves or over-hangs may extend into any minimum side yard set-back, but shall not extend more than thirty (30) inches into such minimum side yard set-back, or closer than three (3) feet to the side property line. Stoops and steps may extend into any minimum side yard set-back, but shall not extend more than thirty-six (36) inches into such minimum side yard setback. Any portable air conditioning unit, whether installed through the wall or set into a window, may extend into the minimum side yard set-back. No portion of a central air conditioning or heating unit shall be located in any minimum side yard setback area. Window awnings and shutters may extend into any minimum side yard setback. No other structures than those specifically permitted above, shall be constructed or erected in any minimum side yard set-back.

Sec. 3: That Section 25-3 of the Code of Ordinances be and the same is hereby amended as follows:

Sec. 25-3. ~~Division of city into districts; zoning map; rules of construction.~~ Districts Established.

~~(a) The City of Miami Springs in its entirety, is hereby divided into districts. These districts and the boundaries thereof are shown on a map, which is hereby adopted and by reference, made a part hereon; said map being designated as "Official District Zoning Map of the City of Miami Springs," and being on file in the office of the city clerk.~~

A. To achieve the purpose of this Ordinance and other applicable laws contained in the Code of the City of Miami Springs, Florida, the City is hereby divided into the following districts:

SYMBOL		DISTRICT
R-1A	R-EA	Single Family Residential
R-1B	RE	Single Family Residential
R-1C	R-1AA	Single Family Residential
R-1D	R-1A	Single Family Residential
R-2	R-1AAA	Two Family Residential
R-3A	R-2AA	Multiple Family Low Density
R-3B		Multiple Family Low-Medium Density
R-3C	R-2	Multiple Family Medium Density
B-1	C-1A	Neighborhood Business
B-2	C-1	Central Business
B-3	C-2	Arterial Business
P-1		Public Property
P-2		Church Use
O-1	O-2	Professional Office Use

B. District Map. The locations of these Districts are shown on a map designated as the "Official District Zoning Map of the City of Miami Springs." This District Zoning Map, together with all notations, dimensions, references and symbols shown thereon, pertaining to such districts, is hereby adopted by reference and declared to be as much a part of this Ordinance as if fully described herein. Said map shall be available for public inspection in the office of the City Clerk and any later alterations to this map, adopted by amendment as provided in this Ordinance, shall be similarly dated, filed and made available for public reference.

~~(b) The city clerk shall have custody of this map as a public record and he shall record or have recorded thereon all subsequent amendments thereto.~~

~~(c) The boundaries of such districts as are shown on this map are hereby adopted and approved, and the regulations of this chapter, as hereinafter set forth, are hereby established and declared to be in effect upon all the land included within the boundaries of each and every district shown upon said map.~~

~~(d) This said map and all the notations, references and other information shown thereon shall be as much a part of this chapter as if such information set forth on such map were fully described and set out herein.~~

~~(e) Where uncertainty exists as to boundaries of any district shown on said map the following rules shall apply:~~

C. Interpretation of District Boundaries:

(1) Where such district boundaries are indicated as approximately following street lines, alley lines or lot lines, such lines shall be construed to be such boundaries;.

~~(2) In unsubdivided property or where a district boundary divides a lot, the location of such boundary, unless the same is indicated by dimensions, shall be determined by use of the scale appearing on the map;~~

~~(3)~~ (2) In case any further uncertainty exists, the Council shall interpret the intent of the map as to location of such boundaries, after having received the recommendations of the zoning and planning board.

~~(4)~~ (3) Where any public street or alley is hereafter properly and officially vacated or abandoned, the regulations applicable to each parcel of abutting property shall apply to that portion of such street or alley added thereto by virtue of such vacation or abandonment until action has been taken to amend the official district zoning map.

~~(5)~~ (4) Should any area appear to be not included in any district or should any area be annexed by the city, such area shall be the highest

district nearest thereto (excluding District upu, P-1 (Public Property District") see supra, and the use shall be the use permitted in such most restricted district, so that there will be no doubt that all the area within the limits of the City of Miami Springs shall be zoned.

(5) If a parcel of property is crossed by a zoning district boundary, the district boundary shall be determined:

(a) by a natural boundary; river, canal or other quasi-natural boundaries.

(b) by a dedicated street or alley way.

(c) by the most restrictive zoning use of the two designations involved.

Sec. 4: That Section 25-3.1. of the Code of Ordinances be and the same is hereby repealed.

Sec. 25.3.1. Deferred.

~~Right-of-way-widths-for-certain-streets.~~

~~The-minimum-right-of-way-width-for-the-following streets,-roads-and-public-ways-in-the-City-of-Miami Springs,-Florida,-shall-be-as-follows:~~

~~(a)--N.W.-36th-Street-from-the-center-line-of-Curtiss-Parkway-to-the-Miami-Canal-be zoned-for-a-minimum-width-of-one-hundred feet.--The-center-line-being-described as-the-South-line-of-Sections-19-and-20, both-in-Township-53-South,-Range-41-East.~~

~~(b)--Curtiss-Parkway-(Red-Road)-from-the center-line-of-N.W.-36th-Street-to-the South-boundary-of-Miami-Springs-Country Club-Golf-Course-be-zoned-for-a-minimum width-of-seventy-feet.--The-center-line being-described-as-the-West-boundary-of-Section-19,-Township-53,-South,-Range 41-East.~~

~~(c)--East-Drive-from-the-center-line-of-N.W.-36th Street-to-the-center-line-of-Miami-Canal be-zoned-for-a-minimum-width-of-seventy-feet.--The-center-line-being-described as-the-East-boundary-of-Section-19, Township-53,-South,-Range-41-East.~~

~~(d)--Le-Jeune-Road-(N.W.-42nd-Avenue)-from the-center-line-of-N.W.-36th-Street-to the-center-line-of-the-Miami-Canal,-be zoned-for-aminimum-width-of-one-hundred (100)-feet,-the-center-line-of-the-said right-of-way-being-described-as-the-center line-of-Section-20,-Township-53,-South, Range-41-East.~~

Sec. 5: That Section 25-5 of the Code of Ordinances be and the same is hereby repealed.

Sec. 25-5. Deferred.

~~Same---Alcoholic Beverages.~~

~~In any district within three hundred feet of any R District or within five hundred feet of any church or public school, no premises shall be used for, nor shall any use or occupancy permit, the sale of liquor, beer, wine, or other alcoholic, vinous or malt beverages to be consumed on the premises, except that hotels of fifty rooms or more may provide such service for guests when accessible to patrons thereof only from the main entrance and main lobby of the hotel and no activity connected therewith is visible from a street or other public way. These distances shall be measured in a direct air line between the nearest point on the boundary of said district, school or church premises.~~

Sec. 6: That Section 25-6 of the Code of Ordinances be and the same is amended as follows:

Sec. 25-6. Airport Building Restrictions.

Whenever a permit shall be applied for ~~to construct a building within the distances hereinafter set forth of the approach zone of the north-south runway of the Miami International Airport, as such zone is shown on the official zoning map of the city~~, it shall be necessary before such permit shall be issued, to file with the building superintendent written approval to erect such building from the civil aeronautics administration, F.A.A., or such board having jurisdiction over such matters. The distances from the approved zone and heights of such buildings are as follows:

(1) Any structure within two hundred feet of north right-of-way line of N.W. 36th Street.

~~(2) Any structure exceeding twenty-five feet in height within two thousand feet of north right-of-way line of N.W. 36th Street.~~

~~(3) Any structure exceeding 75 feet in height.~~

Sec. 7: That Section 25-7 of the Code of Ordinances be and the same is amended as follows:

Sec. 25-7. Building permits and occupancy permits.

~~(a)~~A. No structure shall be erected, added to or altered without a building permit.

~~(b)~~B. No building permit for the erection, addition or alteration of a building shall be issued before an application has been made and the proposed use approved for a certificate of occupancy, as evidenced by affidavit.

{c}C. A certificate of occupancy will be issued within two working days after final inspection of the work when completed in accordance with lawful requirements, and it shall state that the new use or occupancy complies with the provisions of this chapter.

{d}D. There shall be no change in the use or occupancy of existing buildings, nor shall any new building or addition to a building be occupied until a certificate of occupancy covering such use has been issued by the building inspector.

{e}E. Where, at the effective date of this Ordinance, there are outstanding valid building permits, authorizing the construction of buildings, structures, additions or alterations, the use of construction of which do not conform to the requirements of this Ordinance, such permits shall be void unless actual construction work, excluding grading or excavating, is substantially underway on that date.

Where, at the effective date of this Ordinance, there are outstanding valid permits, authorizing the use of land or buildings without construction work, and where such use is not permissable under the terms of this Ordinance, such permit shall be void unless the use is actually in existence on that date.

Sec. 8: That Section 25-7.1 of the Code of Ordinances be and the same is amended as follows:

Sec. 25-7.1 Designated Street Frontage Required for Construction of Dwelling.

{a}A. Construction of a dwelling, whether single family, multiple family, apartment house, group house, court apartment, hotel, motel, or residential building of any kind, shall not be made upon any lot, parcel or tract of land which does not have frontage upon a dedicated street.

{b}B. Street, within the meaning of this section, shall not include any alley, utility easement or right-of-way not ordinarily used by general traffic, or any other passage way which is primarily for the convenience of the owner of the property abutting thereon, such as a passageway driveway through the middle of a block giving access to the rear or side of property.

Sec. 9: That Section 25-8 of the Code of Ordinances be and the same is amended as follows:

Sec. 25-8 Construction Materials.

A. All buildings shall be of masonry construction, except that aluminum siding may be used in the renovating of nonconforming structures and except that open, semi-open or screened enclosures, including porches, patios, carports or utility sheds may be constructed of aluminum or some similar fireproof material, ~~provided that such structures shall be attached and bolted to the main building and to a concrete slab floor and further that utility sheds shall be limited in size to not exceed fifty-six (56) square feet, and shall otherwise conform to the requirements of Chapter 7.~~

B. In all cases of difficulty in the approval of construction materials, the South Florida Building Code and current test reports made by the official material control section of Dade County will be considered as final.

Sec. 10: That Section 25-8.1 of the Code of Ordinances be and the same is amended as follows:

Sec. 25-8.1 Roof Materials.

~~(a)~~A. All new roofs, ~~except flat roofs~~, shall be cement or clay tile and shall have a minimum pitch of 2 1/2 inch rise per foot. ~~The pitch of a flat roof shall not exceed 1/4 inch rise per foot.~~

B. Truss roofs spanning more than 18 feet shall be fabricated out of conventional 2 x 6 lumber, preparatory to receiving tile.

C. Flat roofs on Florida Rooms and attached garages or carports may have gravel roofs and shall have a maximum pitch of 1/4" rise per foot of run.

D. Re-Roofs. Any roof cover that has outlived its bond shall be replaced with equal to or better, as per South Florida Building Code and the Southern Standard Building Code, except it is the intent of this section to maintain the tile roof appearance of the community of Miami Springs.

Sec. 11: That a new section to be numbered Section 25-8.2 of the Code of Ordinances be and the same is hereby enacted as follows:

Sec. 25-8.2 Utility Shed.

A. Utility sheds shall be constructed in the rear yard only. (See Construction Materials, Sec. 25-8.)

(1) Utility sheds shall be limited in size to not more than one hundred (100) square feet and shall otherwise conform to Chapter 7. There shall be no more than one utility shed per building site.

(2) Utility sheds shall be detached at least ten feet (10') from the main building and shall conform to set-back requirements applicable to the main building and shall be not less than five (5') feet from the rear lot line.

(3) Minimum electrical and plumbing service may be allowed as approved by the Building Dept. It is the intent of this section that the use of a utility shed be incidental to the family dwelling and shall not be used for any business purpose or sleeping or living quarters.

Sec. 12: That Section 25-9 of the Code of Ordinances be and the same is amended as follows:

Sec. 25-9. First floor elevations.

~~(1)~~A. For wooden floors, the first floor elevation shall be established so that the bottom of the

B. In all cases of difficulty in the approval of construction materials, the South Florida Building Code and current test reports made by the official material control section of Dade County will be considered as final.

Sec. 10: That Section 25-8.1 of the Code of Ordinances be and the same is amended as follows:

Sec. 25-8.1 Roof Materials.

~~(a)~~A. All new roofs, ~~except flat roofs,~~ shall be cement or clay tile and shall have a minimum pitch of 2 1/2 inch rise per foot. ~~The pitch of a flat roof shall not exceed 1/4 inch rise per foot.~~

B. Truss roofs spanning more than 18 feet shall be fabricated out of conventional 2 x 6 lumber, preparatory to receiving tile.

C. Flat roofs on Florida Rooms and attached garages or carports may have gravel roofs and shall have a maximum pitch of 1/4" rise per foot of run.

D. Re-Roofs. Any roof cover that has outlived its bond shall be replaced with equal to or better, as per South Florida Building Code and the Southern Standard Building Code, except it is the intent of this section to maintain the tile roof appearance of the community of Miami Springs.

Sec. 11: That a new section to be numbered Section 25-8.2 of the Code of Ordinances be and the same is hereby enacted as follows:

Sec. 25-8.2 Utility Shed.

A. Utility sheds shall be constructed in the rear yard only. (See Construction Materials, Sec. 25-8.)

(1) Utility sheds shall be limited in size to not more than one hundred (100) square feet and shall otherwise conform to Chaptex 7. There shall be no more than one utility shed per building site.

(2) Utility sheds shall be detached at least ten feet (10') from the main building and shall conform to set-back requirements applicable to the main building and shall be not less than five (5') feet from the rear lot line.

(3) Minimum electrical and plumbing service may be allowed as approved by the Building Dept. It is the intent of this section that the use of a utility shed be incidental to the family dwelling and shall not be used for any business purpose or sleeping or living quarters.

Sec. 12: That Section 25-9 of the Code of Ordinances be and the same is amended as follows:

Sec. 25-9. First floor elevations.

~~(1)~~A. For wooden floors, the first floor elevation shall be established so that the bottom of the

floor joists are at least eighteen (18") inches above grade of building and grade at building line be a minimum of four (4") inches above the established grade for the crown of the road.

~~(2)~~B. For poured concrete floors, the first floor elevation shall be established so that the finished elevation is at least twelve (12") inches above grade of building and grade of building line be a minimum of four (4") inches above the established grade for the crown of the road.

Sec. 13: That Section 25-10 of the Code of Ordinances be and the same is amended as follows:

Sec. 25-10. Fences, landscaping and boundary walls.

~~(a)~~A. No fence, wall or planting over three and one-half feet in height above established grade shall be permitted in any R District within twenty (20) feet of a corner, alley or street intersection. (Vision clearance residential)

~~(b)--No-fence,-hedge-or-boundary-wall-over-three-and one-half-feet-in-height-shall-be-permitted-within five-feet-of-the-boundary-of-any-front-yard.~~

B. No fence, hedge or boundary wall in any front yard area shall exceed three and one-half feet in height and shall not extend beyond the boundary lines.

~~(c)~~C. No rear-yard fence, hedge, ~~screening-or-boundary wall~~ or screening, in excess of ~~five-feet~~ six (6'0") feet in height shall be permitted in any R District. ~~or-within-five-feet-of-the-boundary of-any-R,-District.~~ Where any lot or parcel of property adjoins a residential district, a five foot strip of land along the boundary of said residential district shall be set aside and used for planting or walls by the owner of said lot or parcel at his expense, to form an effective screen for the protection of the residential area. No structure, except such screen or wall or utilities or drainage facilities shall be placed or permitted over the area, except for the installation of maintenance of screening, utilities and drainage facilities.

~~(d)~~D. No hedge, screening, shrubbery or trees growing on private property shall be permitted to ~~overhang and~~ obstruct any perestrian or vehicular public right-of-way.

E. Back and side yard fences shall be constructed of certified redwood, cypress, heavy galvanized chain link wire or other approved equal materials, with a top rail excluding stockade cuts on pickets. Wire fences shall be of the two inch chain link or diamond weave non-climable type or of an approved equal, with a top rail, with the rolled knuckle edge of the wire turned up. If a property owner erects a fence, wall or hedge bordering an alley, the property owner shall provide an off-set in the fence, wall or hedge of not less than four (4') feet by ten (10') feet for the placement of garbage cans or mobile containers.

F. Front yard fences shall be constructed of ornamental iron, or concrete posts and paling and shall not exceed three and one-half (3 1/2') feet in height.

G. Walls, boundary or decorative in front, side or rear yards, shall be solid or semi-open lineal structures of concrete block, stone or other such approved material and shall not exceed three and one half feet (3 1/2') in front and four feet (4'0") in the side or rear yards.

H. Reserved.

Sec. 14: That Section 25-10.1 of the Code of Ordinances be and the same is amended as follows:

Sec. 25-10.1. Swimming Pools and Safety Barriers.

~~(a)~~A. Screening. Unless the swimming pool is entirely screened in, no final inspection and approval shall be given by the building inspector unless there has been erected a safety barrier as hereinafter provided.

~~(b)~~B. Safety barrier. The safety barrier shall take the form of either a completely screened-in patio area or a wire fence.

~~(c)~~C. Height. The minimum height of any fence shall be not less than four (4') feet.

D. It shall be unlawful to construct an underground swimming pool in the front yard or in the front yard set-back of any residential dwelling in the city.

~~(d)~~E. Enclosure. The safety barrier shall be erected either around the swimming pool or around the premises on which the swimming pool is erected; in either event, it shall enclose the swimming pool area entirely, prohibiting unrestrained admittance to the enclosed area.

~~(e)~~F. Gates. Gates shall be of the ~~spring-locking~~ self-locking type so that they shall automatically be in a closed position at all times and shall also be equipped with a safe lock.

~~(f)~~G. Fences. Wire fences shall be of the two inch chain link or diamond weave nonclimbable type, or of an approved equal, with a top rail. They shall be of a heavy galvanized material.

~~(g)~~H. Permits. Before any work is commenced, permits shall be secured for all swimming pools and for safety barriers. Plans shall contain all details to show compliance with the terms and conditions of these regulations. No swimming pool permit shall be issued unless simultaneously therewith a permit (certification) is secured for the erection of the safety barrier; if the premises are already enclosed, as hereinabove provided, permit for the safety barrier shall not be required, if upon inspection of the premises, the existing barrier is proven to be satisfactory.

{h}I. Existing pools. The owner of any swimming pool which shall have been completed prior to the adoption of this section shall erect the safety barrier herein required within six (6) months of the adoption hereof.

Sec. 15: That Section 25-10.2 of the Code of Ordinances be and the same is amended as follows:

Sec. 25-10.2. Parking of commercial vehicles in residential districts restricted.

A. It shall be unlawful for any person to park any commercial vehicle or truck of ~~3/4~~ one (1) ton capacity or over and any motor vehicle commonly known as a bus which term shall include vehicles, excluding station wagons, used for the transportation of school children, in or upon any private property in any zoned residential district of the city as designated on the official zoning map referred to in section 25-3, for a period of time in excess of two hours between 7:00 o'clock a.m. and 6:00 o'clock p.m. and at any time between 6:00 o'clock p.m. and 7:00 o'clock a.m.

B. The term "commercial" vehicle as herein used shall mean a motor vehicle of the above described capacity not designated exclusively for the transportation of persons.

Sec. 16: That Section 25-10.3 of the Code of Ordinances be and the same is amended as follows:

Sec. 25-10.3. Off-street parking facilities; landscaping standards.

{1}A. All off-street parking facilities inclusive of parking lots, shall be surfaces, lined and marked according to the City of Miami Springs standards. (10' x 22')

{2}B. All off-street parking facilities inclusive of parking lots required and/or provided, shall be properly drained so as not to cause any nuisance or damage to adjacent properties in accordance with City of Miami Springs standards and any lighting of the said facilities shall be designed and arranged so as to prevent glare or excessive light on adjacent property. All such facilities and lots shall be designed for the convenient access and safety of pedestrians and vehicles.

{3}C. All off-street parking facilities and parking lots exclusive of parking contained within parking garages or buildings, required and/or provided, shall be properly landscaped.

D. The landscaping as hereinafter required shall include, to the extent necessary to further the intent of this ordinance, lawn, shrubs, hedges, trees or other acceptable materials, plant or otherwise, which may be used as a visual medium. All landscaping shall be maintained in good condition so as to present in perpetuity, a healthy, neat and orderly appearance. The following minimum landscaping standards shall be adhered to in the development of any parking facility or parking lot:

{a}(1) The minimum extent of landscaping required, inclusive of area devoted to required yard areas, shall be the amount and area resulting from the application of the standards hereinafter provided.

{1}(a) Planting areas. All planting areas except those on the periphery of a parking lot or area shall be raised or curbed.

{2}(b) Size of planting areas. All planting areas containing trees shall have a minimum area of fifty (50) square feet and a minimum width of five (5) feet.

{3}(c) Self-parking lots and areas or portions thereof. For angular parking there shall be a minimum of two (2) trees within and up to every one hundred (100) linear feet of parking for each parking row; for parallel parking there shall be a minimum of two (2) trees for the first one hundred (100) feet of parking and one (1) tree for each additional one hundred (100) feet, each tree shall be spaced equi-distant from aforesaid trees wherever possible.

{b}(2) Living trees shall be provided in accordance with the landscape standards as provided in paragraph (D)(1) above. The required trees shall be at least twelve (12) feet in overall height, shall be graded Florida #1 or better as defined by the Florida Department of Agriculture, Division of Plant Industry in "Grades and Standards for Nursery Plants, Part II, Palms and Trees" and as may be revised. The trees when planted shall have a minimum caliber of two and one-half (2 1/2) inches in the trunk and a clear trunk of at least five (5) feet and shall be properly braced. The minimum number of such trees shall be determined by the application of the landscape standards as stated. All required trees shall be shade trees unless otherwise provided for by the provisions of this section.

{c}(3) Water availability shall be provided for landscape maintenance purposes.

{d}(4) A decorative wall or evergreen hedge shall be provided (unless specifically exempted) immediately adjacent to front, side and rear lot lines in accordance with these standards. The minimum height of such wall or hedge shall be two and one-half (2 1/2) feet and maximum height permitted shall be six (6) feet. The shrubs used in the development of a hedge shall be placed not more than two and one-half (2 1/2) feet on center and said shrubs, where used as a hedge or otherwise, shall be graded Florida #1 or better as defined by the Florida Department of Agriculture, Division of Plant Industry, in "Grades and Standards for Nursery Plants, Part I," and as may be revised.

~~(c)~~(5) Interior planting bed areas which are used for the planting of trees or which are used for landscaping treatment generally shall be subject to the landscape standards hereinabove stated in paragraph (D)(1) and such areas may at the discretion of the developer, be treated with either grass and/or other types of ground cover or material used as a visual medium.

~~(4)(a)~~E. Prior to the approval of the City of Miami Springs Buiding Department of any building or paving permit that involves the providing of more than four (4) off-street parking spaces, a plan depicting landscaping in conjunction with off-street parking shall be prepared in accordance with the standards hereinabove stated and shall be approved by the Miami Springs Zoning & Planning Board. The landscaping plan shall be submitted to the Miami Springs Building Department at least 10 (10) days prior to the schedule date of the public hearing before the Miami Springs Zoning & Planning Board.

~~(b)~~(1) In all instances, plans shall clearly and accurately designate according to the City of Miami Springs standards, parking spaces, access aisles, driveways, landscaping and relationship to the uses and/or structure that the off-street parking facilities or parking lots are intended to serve.

~~(c)~~(2) No such plan shall be approved unless it is determined by the above review process that the layout of the facilities or lot, incorporating landscaping, will provide for reasonable protection against undesirable effects with respect to contiguous property and unless it is determined that the landscaping will preserve and promulgate the appearance and character of the surrounding neighborhood through the screening effects and aesthetic qualities afforded by such landscaping.

Sec. 17: That Section 25-12 of the Code of Ordinances be and the same is amended as follows:

Sec. 25-12. Subdivisions; plat; approval.

A. It shall be unlawful to subdivide any property within the City of Miami Springs, or to open, grade, or improve any streets, therein, or to erect, have constructed or cause to be constructed any residence or other structure on any unplatted land, until a plat of said proposed subdivision shall have first been approved by the city council.

B. No such plat or replat shall be approved until the following requirements have been met:

~~(a)~~ (1) Tentative plat. A tentative plat to be approved by the zoning and planning board showing all lots, streets, and alleys, together with their dimensions, as well as connecting adjoining streets and the elevation of the land in said subdivision to be expressed in feet above mean sea level (United States Coast and Geodetic Survey datum). The said elevations may be shown as contours at one foot intervals.

~~(b)~~ (2) Final plat. The final plat shall show wherever required the limits of areas thereof to be filled together with the elevation of such fills.

The elevation of fills, wherever required, shall be as established by the Dade County Engineer's Office and as shown on the official map of the City of Miami Springs date ~~October 30, 1950~~ September, 1970 and on file in the office of the city clerk, the said map being made by reference, a part of this chapter.

~~(c)~~ (3) Agreement; bond. All persons, firms, and corporations submitting plats to the city council for approval shall accompany such plat with an agreement providing for the paving of the streets, the construction of the sidewalks, drainage structures, and the installation of adequate water mains, fire hydrants, street lighting and such other improvements as the council deems necessary in said subdivision, which installation shall be in accordance with the specifications as set forth by the city council. The said agreement shall be accompanied by a surety bond in the penal sum of not less than one hundred ten per cent of the estimated cost of such construction. Such agreement shall be approved by the ~~town~~ city council and filed with the city clerk. The condition of this bond shall be such that the principal shall fully and faithfully perform all the terms and conditions of the principal's agreement and within the time specified therein. Said bon shall be released by the city only upon satisfactory completion of the work specified in the agreement as evidenced by written certification by the city engineer including certification that the elevations of all pavements, sidewalks and fills comply with the provisions of this chapter.

This agreement shall stipulate such time limits as the city council shall require for the various installations specified therein.

~~(d)~~ (4) Alleys. Any such plat or replat shall include properly dedicated alleys in the rear of the lots shown on such plat or replat, which alleys shall not be less than sixteen feet in width,

and in such alleys there shall be provided returns having twenty-five foot radii to permit free ingress and egress, where the alleys intersect other alleys, to permit vehicles to pass in and out without encroaching on adjoining property.

~~(e)~~ (5) Lot sizes. All building sites and lots in residential districts shall have a minimum width of seventy-five feet and a minimum depth of one hundred feet, and all building sites or lots in commercial or business districts shall have a minimum width of twenty-five feet and a minimum depth of one hundred feet. The purpose and intent of this paragraph is to prevent the reduction in size of lots and tracts, or parcels of land from being redivided to parcels of less than the minimum required herein. It is not intended to prevent lots in existence at the time of passage of this chapter, being increased in size or width even though such increase does not reach the prescribed minimum.

Sec. 18: That Section 25-13 of the Code of Ordinances be and the same is hereby repealed.

~~Sec. 25-13. Signs---Determination of area; classification.~~

~~(a) Specifications.--The sign area shall be the area of that rectangle which would enclose all parts of the sign.--The structural supports of the sign, whether they be column, a pylon, or a building or part thereof, shall not be included in the sign area.--A double faced sign shall be considered one sign in computing sign area.--The area of a cylindrical sign shall be computed by multiplying the diameter by the height of the sign and adding fifty per cent (50%) to the result.~~

~~(b) Classification.--For the purposes of this chapter all signs are hereby divided into five (5) classes as follows:~~

~~(1)--Class A Signs.--A Class A sign is identified as a temporary sign advertising the rental or sale of the premises whereon it is located and not exceeding one hundred, forty four (144) square inches in all over size.~~

~~(2)--Class B signs.--A Class B sign is any sign advertising to the public the legal or exact firm name of business or activity operated on the premises, or for advertising any service or product actually offered for sale on the premises; and area shall not exceed two (2) square feet for each lineal foot of building wall fronting on street on which main entrance fronts, but not to exceed a maximum area of seventy five (75) square feet.--All Class B signs shall be considered structures and shall require a building permit.--No more than three (3) signs shall be permitted for any business or activity operated on the premises or for advertising any service or product offered for sale on the premises and the total combined sign area of the three (3) signs shall not exceed a maximum area of seventy five (75) square feet.~~

~~(3)--Class-C-signs.--A-Class-C-sign-is-identified as-a-temporary-sign-displayed-in-connection with-new-construction-work-and-may-be-displayed-only-at-such-times-as-actual-construction-work-is-in-progress.--One-(1)-sign-may be-erected-on-each-street-frontage-and-each sign-shall-be-limited-to-sixteen-(16)-square feet.--On-corner-intersections,-no-portion of-any-sign-may-be-constructed-as-to-conflict with-the-vision-clearance-requirements-of Section-25-10-and-25-16.~~

~~(4)--Class-D-signs.--A-Class-D-sign-is-a-directional sign-not-larger-than-one-(1)-square-foot-in area-giving-direction-at-entrances-and-exits of-off-street-parking-areas.--Two-(2)-Class-D signs-may-be-permitted-at-each-entrance-and each-exit.~~

~~(5)--Class-E-signs.--A-Class-E-sign-is-a-temporary sign-and-may-be-used-as-follows:~~

~~(i)--Paper-or-other-temporary-signs-may be-affixed-to-or-painted-on-the-inside of-glass-display-windows-of-commercial establishments,-provided-however,-that not-more-than-one-(1)-such-sign-shall cover-more-than-thirty-percent-(30%)-of the-window-area-or-exceed-four-(4) square-feet-in-area-whichever-is-smaller.~~

~~(ii)--Temporary-signs-announcing-or-advertising a-"going-out-of-business",-relocation, removal-or-other-similar-type-of-activity, shall-be-permitted-on-premises-zoned-for commercial-use-not-to-exceed-ninety-(90) days-and-provided-also-that-they-do-not exceed-four-(4)-square-feet-in-area-or thirty-per-cent-(30%)-of-window-area, whichever-is-smaller.~~

Sec. 19: That Section 25-13.1 of the Code of Ordinances be and the same is hereby repealed.

~~Sec.-25-13.1--Nonconforming-signs.~~

~~A-nonconforming-sign-or-billboard-or-portion-thereof which-use-existed-lawfully-at-the-time-of-the-adoption of-this-chapter,-may-be-continued-provided-that:~~

~~(a)-No-sign-or-billboard-or-other-advertising-structure lawfully-in-existence-on-the-adoption-of-this-section,-shall-be-altered-or-moved-unless-it-be-made to-comply-with-the-provisions-of-this-section.~~

~~(b)-No-building-or-portion-thereof-or-land-used-in whole-or-part-for-nonconforming-advertising-signs or-billboards-according-to-the-provisions-of-this chapter-and-which-use-is-abandoned-for-a-continuous period-of-six-(6)-months,-shall-again-be-used except-in-conformity-with-the-regulations-of-the district-in-which-the-said-building-or-land-is situated.~~

(c) Nonconforming signs and billboards shall not be extended or enlarged.

(d) No advertising sign or billboard which has been damaged by fire, explosion, act of God or the public enemy to the extent of fifty per cent of the replacement value of the advertising sign or billboard immediately prior to the damage, shall be restored except in conformity with the regulations in this chapter.

(e) The provisions of this section shall not exempt the owners or lessees of any nonconforming advertising sign or billboard from the requirements of section 25-15 pertaining to the maintenance and construction requirements.

(f) Every sign or other advertising structure which was existed lawfully prior to the adoption of this ordinance which now violates or does not conform to this Code shall be removed or altered or replaced so as to conform with the provisions of this Code within four (4) years from November 22, 1965. If the owner fails to remove or alter the sign or advertising structure so as to comply with this Code within four (4) calendar years after such notice, such sign, or other advertising structure may be removed or altered to comply by the building inspector at the expense of the owner or owners of the advertising sign or structure.

The building inspector may cause any sign or other advertising structure which is an immediate peril to persons or property to be removed summarily and without notice.

Sec. 20: That Section 25-14 of the Code of Ordinances be and the same is hereby repealed.

Sec. 25-14. Same---Prohibitions.

The following restrictions shall apply to all signs:

(a) No sign shall be so located as to constitute a hazard.

(b) No permit shall be issued for any advertising matter which would conflict with the regulations for the zone in which it is located.

(c) No sign shall be placed on any property, unless the applicant has written consent of the owner and/or lessee of the property.

(d) No sign shall exhibit thereon any lewd lascivious, indecent or immoral matter.

(e) No sign shall be attached to trees, utility poles or any other unapproved supporting structure.

(f) No sign, where a permit is necessary, shall be exhibited, unless the required permit fees are paid.

(g) Fence and wall signs shall be prohibited in residential zones.

~~(h) On all corner intersections, no portion of any sign which exceeds four feet in height which does not provide an eight foot clearance between the bottom of the sign and grade shall be placed within fifteen feet of any official right-of-way line.~~

~~(i) Any owner identification sign advertising a commodity or service associated with a premise shall be removed from the premises by the owner or lessee within thirty (30) days from the time such activity ceases to exist.~~

Sec. 21: That Section 25-15 of the Code of Ordinances be and the same is hereby repealed.

~~Sec. 25-15. -- Same -- Maintenance; construction requirements.~~

~~(a) Where the rear of any sign is visible from a street, waterway, park or residence, or from any R District, the exposed structural members of such sign shall be either concealed by painted lattice work, pints or be suitably painted or decorated, and such back screening shall be designed, painted, and maintained to the satisfaction of the zoning and planning board.~~

~~(b) The owners of each sign shall be responsible for keeping the weeds cut from the area in front of and between the sign and the nearest highway or waterway, and within a radius of fifty feet of all signs not attached to buildings.~~

~~(c) The building inspector may cause to be removed any billboard or advertising sign which shows neglect or becomes dilapidated or where the area around such sign is not maintained as provided herein after thirty days notice has been given in writing.~~

~~(d) The owner and/or tenant of the premises, and the owner and/or erector of the sign shall be held responsible for any violation of these regulations.~~

~~(e) All signs shall conform to structural requirements of the building and/or electrical code or other applicable technical codes.~~

Sec. 22: That Section 25-15.1 of the Code of Ordinances be and the same is hereby repealed.

~~Sec. 25-15.1. -- Reserved.~~

Sec. 23: That a new section to be numbered Section 25-13 of the Code of Ordinances be and the same is hereby enacted as follows:

Sec. 25-13 Signs - Determination of Area: Classification

A. Specifications. The sign area shall be the area of that rectangle which would enclose all parts of the sign. The structural supports of the sign, whether they be column, a pylon or a building or part thereof, shall be considered one sign in computing sign area.

B. Classification. For the purposes of this chapter, all signs are hereby divided into seven (7) classes, as follows:

(1) Class A Signs. A class A sign is identified as a temporary sign advertising the rental or sale of the premises whereon it is located and not exceeding one hundred forty-four (144) square inches in overall size.

(2) Class B Signs. A class B sign is any sign advertising to the public, the legal or exact firm name of the business or activity operated on the premises or for advertising any service or product actually offered for sale on the premises, and area shall not exceed two (2) square feet for each lineal foot of building wall fronting on street of the main entrace.

(a) A progression of signs permitted for larger buildings: Building front footage versus allowable sign area: 25/50, 50/75, 75/100, 100/125. No single sign may exceed seventy-five square feet. All class B signs shall be considered structures and shall require a building permit. No more than three (3) signs shall be permitted for any business or activity operated on the premises.

(b) No class B sign shall be permitted on vacant land or land occupied by a single or two-family dwelling; nor shall any class B sign be located in the minimum front, side or rear yard setbacks, as provided in this district.

(3) Class C Signs. A class C sign is identified as a temporary sign displayed in connection with new construction work and may be displayed only at such times as actual construction work is in progress. One (1) sign may be erected on each street frontage and each sign shall be limited to thirty-two (32) square feet. On corner intersections, no portion of any sign may be constructed as to conflict with the vision clearance requirements of Section 25-10 and Section 25-16.

(4) Class D Signs. A class D sign is a directional sign not larger than one hundred forty-four square inches in area giving directions at entrances and exits of off-street parking areas. Two (2) class D signs may be permitted at each entrance and each exit.

(5) Class E Signs. A class E sign is a temporary sign and may be used as follows:

(a) Paper or other temporary signs may be placed on the inside of glass display windows of commercial establishments, provided however, that not more than one (1) such sign shall cover more than thirty (30%) per-cent of the window area or exceed four square feet in area, whichever is smaller. (Max. time limit - 30 days)

(b) Temporary signs announcing or advertising a "going-out-of-business", relocation, removal or other similar type of activity, shall be permitted on premises zoned for commercial use not to exceed ninety (90) days and provided also that they do not exceed four (4) square feet in area or thirty (30%) percent of window area, whichever is smaller.

(6) Class F Signs. A class F sign is a bulletin board not exceeding thirty (30) square feet, free standing or attached to the building or structure. It shall be permitted for churches, groups or other such public or semi-public purposes. Such sign shall be constructed to withstand wind pressure of at least thirty-five (35) pounds per square foot.

(7) Class G Signs. Any sign which is a flat, awning, or marquee sign, non-illuminated and limited in total area to 15 square feet, giving the name and/or address of management of a multiple family dwelling or group of multiple family dwellings. Also, in professional office zones, any sign which is a flat, awning, or marquee sign, non-illuminated and limited in total area to 15 square feet, giving name, address and/or nature of occupation or service available, of the building occupants in such professional office zone; provided further, that, in any case, the height of the letters shall not exceed one foot in height.

Sec. 24: That a new section to be numbered Section 25-13.1 of the Code of Ordinances be and the same is hereby enacted as follows:

Sec. 25-13.1. Nonconforming signs.

A. A non-conforming sign or billboard or portion thereof, which use existed lawfully at the time of the adoption of this chapter, may be continued, provided that:

(1) No sign or billboard or other advertising structure lawfully in existence on the adoption of this section, shall be altered or moved unless it be made to comply with the provisions of this section.

(2) No building or portion thereof or land used in whole or in part for nonconforming advertising signs, or billboards according to the provisions of this chapter and which use is abandoned for a continuous period of six (6) months, shall again be used except in conformity with the regulations of the district in which the said building or land is situated.

(3) Non-conforming signs and billboards shall not be extended or enlarged.

(4) The provisions of this section shall not exempt the owners or lessees of any non-conforming advertising sign or billboard from the requirements of section 25-15 pertaining to the maintenance and construction requirements.

(5) Any sign which does not comply with the provisions of this ordinance and which is damaged, by any cause, to the extent that the cost of repairing the sign equals 50% or more of the value of the sign when damaged, shall be removed or replaced in conformance with the regulations contained herein.

(6) In any district where a sign does not comply with the provisions of this ordinance, such sign and any supporting structures other than a building, shall be removed not later than four (4) years from the effective date of this ordinance. Supporting structures for nonconforming signs may continue in use for a conforming sign if they comply in all respects to the applicable requirements of the regulations contained herein and other codes and ordinances.

Sec. 25: That a new section to be numbered Section 25-13.2 of the Code of Ordinances be and the same is hereby enacted as follows:

Sec. 25-13.2. Signs - Prohibitions.

A. The following restrictions shall apply to all signs:

(1) No sign shall be so located as to constitute a hazard.

(2) No permit shall be issued for any advertising matter which would conflict with the regulations for the zone in which it is located.

(3) No sign shall be placed on any property, unless the applicant has written consent of the owner and/or lessee of the property.

(4) No sign shall exhibit thereon, any lewd, lascivious, indecent or immoral matter.

(5) No sign shall be attached to trees, utility poles or any unapproved supporting structures, except as provided in Sec. 3-17 of the Code of Ordinances.

(6) No sign where a permit is necessary, shall be exhibited unless the required permit fees are paid.

(7) Fence and wall signs shall be prohibited in residential zones.

(8) On all corner intersections, no sign shall be erected which obstructs clear vision between 3 1/2' and 10' above grade within 15' from any official right-of-way line.

(9) Any owner identification sign advertising a commodity or service associated with a premise, shall be removed from the premises by the owner or lessee within 90 days from the time such activity ceases to exist.

(10) No sign shall have spinning devices or mechanical moving parts unless authorized by permit.

(11) No sign shall be constructed, erected, used, operated or maintained so as to display intermittent lights to the extent of confusing or distracting a motorist, so as to display intermittent lights resembling, or seeming to resemble, the flashing lights which are customarily associated with danger, or which are customarily used by police, fire or ambulance vehicles, or for navigational purposes.

(12) No sign shall be constructed, erected, used, operated or maintained which uses the word "Stop" or "Danger", or which is a copy or imitation of an official sign. This provision regarding the words "Stop" and "Danger" does not apply when the words are a part of attraction titles for a broadcast, motion picture, theatre event, opera or concert, or when they are used in descriptive lines of advertising, so long as they are not used to simulate copy or imply any official traffic warning either for vehicles or for pedestrians.

Sec. 26: That a new section to be numbered Section 25-13.3 of the Code of Ordinances be and the same is hereby enacted as follows:

Sec. 25-13.3 Signs

A. To achieve the purposes of this ordinance and the Code of the City of Miami Springs, Florida, and provide for the general welfare and safety of the public, it is necessary that regulations be established for the location, size, purpose and lighting of signs erected or displayed in the City.

B. General Sign Regulations.

(1) The following regulations apply generally to all signs and are in addition to the regulations established for each zoning district or the regulations contained elsewhere in this ordinance.

(a) Permit Required. No sign, unless herein excepted shall be erected, constructed, posted, painted, altered, maintained or relocated, except as provided in this section, until a permit is issued by the Building Department. Before any permit is issued, an application, especially provided by the Building Department, shall be filed, together with such drawings

and specifications as may be necessary to fully advise and acquaint the Department with the location, construction, materials, manner of illumination, and securing or fastening, and number of signs applied for and the wording of the sign or advertisement to be carried on the sign. All signs which are electrically illuminated by neon or by any other means shall require a separate electrical permit number and name of the person or firm placing the sign on the premises.

(b) Code Requirements. Structural and safety features and electrical systems shall be in accordance with the requirements of the South Florida Building Code. No sign shall be approved for use unless it has been inspected and found to be in compliance with all the requirements of this ordinance and applicable technical codes. Further, no sign over 32 square feet in area, or weighing more than 1000 pounds, or the top of which is more than eighteen feet above the ground shall be permitted to be erected unless a registered engineer's drawing is submitted to the building department showing the sign is capable of withstanding a wind pressure of at least thirty-five (35) pounds per square foot.

(c) Exempt Signs. The following signs are exempted from the provisions of these regulations and may be erected or constructed without a permit but in accordance with the structural and safety requirements of the building code.

(i) Official traffic signs or sign structures, or municipal information signs and provisional warning signs or sign structures, when erected or required to be erected by a governmental agency, and temporary signs indicating danger.

(ii) Changing of the copy on a bulletin board, poster board, display encasement or marquee.

(iii) Signs on a truck, bus or other vehicle, while in use in the normal course of business.

C. Public Events. The city manager, upon application as required in this section, may issue temporary permission for the following signs and displays for a period of not exceeding thirty (30) days, when in his opinion, the use of such signs and displays would be in the public interest and would not result in damage to private property.

(1) Sign advertising a special civic or cultural event such as a fair or exposition, play, concert or meeting, sponsored by a governmental or charitable organization.

(2) Special decorative displays used for holidays, public demonstrations, or promotions of non-partisan civic purposes.

D. Pennants, Banners, Streamers. Pennants, banners streamers and all other fluttering, spinning or similar type signs and advertising devices are prohibited, except for national flags and flags of political subdivisions of the United States, and except for flags from bona-fide civic, charitable, fraternal and welfare organizations and except during nationally recognized holiday periods, pennants, banners, streamers and other fluttering, spinning, or similar type advertising devices pertaining to said holiday periods may be displayed on a temporary permit basis as provided in this chapter. Advertising umbrellas are included in this category.

Sec. 27: That a new section to be numbered Section 25-13.4 of the Code of Ordinances be and the same is hereby enacted as follows:

Sec. 25-13.4 - Zoning District Sign Regulations.

A. All signs permitted in these regulations shall be Establishment Identification Signs, unless otherwise specified.

(1) Signs permitted in the R-1A, R-1B, R-1C and R-1D Districts.

(a) One (1) Class A sign subject to the following:

(i) No such sign shall be displayed, constructed, reconstructed, situated, maintained or erected by anyone other than the owner, owner's agent, or lessee of the lot, parcel of land or premises, and then only on the lot or premises as herein set forth.

(ii) There may be only one such sign on the lot or parcel of land or on the improvements thereon, regardless of the size of such lot, parcel or improvements, and such sign may contain only one of the following designations, to wit: For Lease, For Sale, For Sale or Lease, Open for Inspection, For Rent; and no name, address, or telephone number other than that of the owner or lessee shall appear on such sign, provided however, that the name and the telephone number of a registered real estate broker may be contained or placed thereon.

(iii) Said sign shall not be nearer than 10 feet from any property line, if placed on vacant property and, if placed on land improved by building, it shall not be placed nearer than 5 feet from any property line, in which case it may be placed in or

upon a front or side door window of the building; if there is a wall upon the property line, then such sign may be placed on or against such wall.

(iv) A permit is not required for a temporary real estate sign.

(v) A permit is required for an identification sign passive in character, that identifies the owner by name, vocation and telephone number.

(2) Signs permitted in the R-2 Districts.

(a) One (1) Class A sign.

(b) One (1) Class F sign.

(3) Signs permitted in the R-3A, R-3B and R-3C Districts - Multiple Family Districts

(a) One Class A sign.

(b) One Class C sign.

(c) Class D signs.

(d) One Class F sign.

(e) One Class G sign.

(4) Signs permitted in the B-1, B-2 and B-3 Districts; Neighborhood, Central and Arterial Commercial Districts.

(a) One Class A and B sign shall be permitted on any parcel, tract, lot or lots, under one ownership in this district. All signs erected in any yard or open space shall be set back from all streets and public ways a distance equal to the height of the sign from grade to its uppermost point.

(5) Signs permitted Professional Office District. O-1 District.

(a) One Class A sign.

(b) One Class C sign.

(c) One Class D sign.

(d) One Class F sign.

(e) One Class G sign.

~~(i)~~ (a) Galvanized pipe or extruded aluminum frame covered with chain link fencing material and/or dark green plastic screening.

~~(2)~~ (b) Galvanized pipe or extruded aluminum frame covered with chain link fencing material and/or dark green plastic screening located on top of a masonry wall provided such masonry wall does not exceed a height of four feet above finished grade.

~~(3)~~ (c) Glass in extruded aluminum frames provided where masonry is used in the wall of such construction, such masonry walls shall not exceed a height of four feet above finished grade.

~~(4)~~ (d) Galvanized pipe or extruded aluminum frame covered with galvanized expanded material painted green.

~~(b)~~ (2) Outside covering. In those instances where a greenhouse is constructed of chain link fence material, such greenhouse shall be covered, at all times, with dark green plastic screen, provided however, such plastic screen may be temporarily removed in the event of a hurricane.

~~(c)~~ (3) Size restrictions. The ground dimensions of such greenhouse shall not exceed a width of twelve (12) feet, and a depth of sixteen (16) feet.

~~(d)~~ (4) Wall height limit. The walls of the greenhouse shall not exceed a height of four feet above finished grade.

~~(e)~~ (5) Building height limit. The greenhouse shall not exceed an overall height of eight and one-half (8 1/2) feet above finished grade.

~~(f)~~ (6) Roof pitch. The roof pitch of such greenhouse shall not exceed a maximum of three (3) inches in twelve (12) inches.

~~(g)~~ (7) Shading materials. Sun screen and other materials used for shading except dark green plastic screen shall be used only on the side of the greenhouse.

~~(h) Setbacks. The setbacks of such greenhouse shall be the same as required for screened enclosures.~~

~~(i)~~ (8) Position on lot. The greenhouse shall not be located in the front, side or rear yard set-back of any property as provided by Chapter 25 of the Code of Ordinances of the City of Miami Springs and shall not be located ~~in the rear yard unless located no closer to the side yard lot line than the main structure itself~~ closer than ten (10') feet from the main structure and five (5') feet from the rear lot line. Greenhouses are permitted in the rear yard only.

(6) Signs permitted in Public Property District. P-1 District.

Any sign which may be deemed necessary for the operation of the property for notification purposes which may be deemed by the city council.

(7) Signs permitted in Church Use Districts. P-2 Districts.

One Class F sign.

Sec. 25-15. Reserved.

Sec. 28: That Section 25-16 of the Code of Ordinances be and the same is amended as follows:

Sec. 25-16. 25-14. Vision clearance at intersections.

No building or structure shall be erected and no vegetation shall be maintained in any ~~G-1 or G-1A~~ B-1, B-2, or B-3 zone between the sidewalk and a height of ten feet above the established top of the curb grade at any corner in the portion of the block described as follows: Beginning at the intersection of street lines, or street lines produced; thence run along one of the street lines or street lines produced, a distance of ten feet to a point; thence across the corner of the block to a point on the other street lines, or street lines produced, said point being ten feet from the above mentioned intersection of street lines, or street line produced; thence run ~~fifteen~~ ten feet to the point of beginning. A supporting column not more than eighteen inches in diameter at its greatest cross section dimension shall be permitted at the corner.

Sec. 29: That Section 25-17 of the Code of Ordinances be and the same is hereby repealed.

~~Sec. 25-17. Public Property district, P.~~

~~(a) Uses permitted:~~

~~(1) Any lawful use authorized by the owning or controlling federal, state, county or municipal governing body or board, except such uses as the city council upon recommendation of the zoning board may from time to time declare to be not in the public interest or obnoxious or detrimental to the health or welfare or the residents of the city. However, no property owner abutting public property shall have the right of exclusive use of any of such public property for uses such as the storage of implements, vehicles or materials except that he may plant trees and/or beautify the parkways upon approval of the city clerk.~~

~~(b) Public utilities. It shall be unlawful to install, extend or maintain any utility in this district until written approval has been obtained from the building inspector. The building inspector~~

~~shall use the current Dade County requirements applying to such installation, extensions and maintenance as a guide insofar as they are applicable.~~

~~(c) Signs.--No signs or advertising matter on trees, poles, garbage cans, benches or other articles or places shall be permitted in this district, except those erected by the municipality or other governing body, for traffic regulation, direction or similar public purposes.--Signs on an abutting building may extend the thickness of the material but not more than one foot beyond its face.--Overhanging or suspended signs shall not be permitted.~~

~~(d) Parking.--Where alleys or other public ways are deemed in excess of the needs of traffic, portions thereof not needed for easy access may be set aside for public parking of vehicles as may be prescribed by order of the city council.~~

Sec. 30: That Section 25-18 of the Code of Ordinances be and the same is hereby repealed.

~~Sec. 25-18.--Church use only.~~

~~(a) Uses permitted.--Any building used for church services, Sunday school instruction or other activities directly connected with the normal operation of a church.~~

~~(b) Building height limits.--The maximum building height shall be two and one half stories or thirty five feet, whichever is lower.~~

~~(c) Site.--The minimum building site shall be three acres, or the square foot equivalent thereof.~~

~~(d) Front, side and rear yard requirements.--No structure in this area shall be built closer than thirty feet to the exterior property lines of the minimum building site as herein required.~~

~~(e) Off Street Parking.--The off street parking requirements for such district shall be as provided for by this chapter.~~

Sec. 31: That Section 25-18.1 of the Code of Ordinances be and the same is amended as follows:

Sec. ~~25-18.1~~ 25-15. Greenhouses in residential districts.

A. A greenhouse shall be permitted as an auxiliary use in any "R" district and shall be restricted to the sole purpose of raising plants and flowers subject to the following conditions and restrictions, to wit:

(a)(1) Construction requirements. Such greenhouses shall ~~be constructed of~~ be anchored to the ground in a manner consistent with the requirements provided by the South Florida Building Code and shall be constructed of:

~~(j)~~(9) Landscaping. Such greenhouse shall be properly screened by landscaping in a manner not inconsistent with the provisions of the applicable ordinances of the city so that such greenhouse shall not detract from the view of adjacent property. Such greenhouse construction shall be subject to the approval by the building inspector and such landscaping shall be maintained for as long as the structure shall remain on the premises.

~~(k)~~(10) Toilet facilities. A greenhouse shall not contain toilet facilities but may contain a sink for washing and care of orchids or other flowers and plants.

~~(l)~~(11) Structural design. The structural design of the greenhouse shall be subject to approval by the building inspector.

Sec. 32: That Section 25-19 of the Code of Ordinances be and the same is amended as follows:

Sec. ~~25-19~~ 25-16. Single family district - R-EA R-1A

~~(a)~~A. Uses permitted:

(1) One (single) family dwelling; in no case shall there be more than one main building on a lot.

(2) Accessory structures and uses incidental to such single family dwelling when placed on the same lot or parcel of land and not used or operated commercially, including: private garage, children's playhouse; tool shed; workshop; servant's quarters and guest houses are prohibited. No accessory building shall be located closer than five (5') feet to any boundary line of the premises. Such accessory structures shall occupy not more than fifteen percent of the area of the rear yard, and shall conform in design, construction and character to that of the main building.

(3) ~~No signs or advertising shall be permitted except one Class A sign.~~ Signs. See "Signs", Sec. 25-13.

~~(b)~~B. Building height limit. The maximum building height shall be two and one-half stories or thirty-five feet.

~~(c)~~C. Building site area required. The minimum building site area shall be one lot or parcel of land ten thousand (10,000) square feet in area for each one (single) family dwelling. Such parcels shall have a minimum average width of at least seventy-five (75) feet. Two (2) or more lots or parcels of land may be joined for the purpose of creating a single minimum building site area. Lots or parcels of land of average width of more than fifty (50) feet but less than seventy-five (75) feet containing more than ten thousand (10,000) square feet, may be occupied by one (single) family dwelling only, if the abutting lot or

parcel cannot because of diversity of ownership be joined with the lot or parcel of substandard width to create an average minimum width of seventy-five (75) feet and the diversity of ownership existed prior to the passage of this ordinance. Minimum front, side, and rear yard requirements applicable to all lots or parcels of land in this zoning district shall be required for any lot or parcel of substandard width. Where a lot or parcel of land has an area of less than the above required minimum and is designated on a plat of record at the time of the passage of this ordinance, said lot may be occupied by one (single) family dwelling, provided however, that the minimum front, side and rear yard requirements set out in this section are met.

~~(d)~~D. Front yard required. There shall be a front yard of a depth of not less than thirty feet, unless the average depth of the front yard of the contiguous lot or lots is either greater or less than thirty feet, in which case the front yard shall be the average depth of the front yard of the contiguous lot or lots. In case there is no dwelling on the block, the depth of the front yard shall be a minimum of thirty~~*~~ feet. The maximum depth of the front yard permitted shall be not more than fifty per cent of the depth of the lot, or building site.

~~(e)~~E. Side yard required. There shall be side yards, the width of each to be not less than ten per-cent of the average width of the lot but in no case shall each side yard be less than five feet. ~~except for that corner lots the side yard adjoining the street shall be not less than fifteen feet.~~ For every floor above the first floor there must be an additional two and one-half (2 1/2') feet set-back on the sides. For two and one-half stories, 7 1/2' side yard set-backs, over and above the original 10% required. Side yards adjacent to the street shall not be less than fifteen (15') feet.

*in both new and existing buildings,

~~(f)~~F. Rear yard required. There shall be a rear yard of not less than twenty-five feet in depth.

~~(g)~~G. Floor area requirements. The minimum floor areas of dwellings in this district shall be eighteen hundred (1800) square feet.

~~(h)~~H. Off-street parking. Whenever a dwelling unit is erected or reconstructed, there shall be provided one off-street parking space for each dwelling unit. Maximum number of parking spaces shall be four per single family dwelling.

Sec. 33: That Section 25-20 of the Code of Ordinances be and the same is amended as follows:

Sec. ~~25-20.~~ 25-17. Same - ~~RE~~ - R-1B.

~~(a)~~A. Uses permitted:

(1) One (single) family dwelling and in no case shall there be more than one main building on a lot.

(2) Accessory structures and uses incidental to such single family dwelling shall be the same as in District ~~R-EA~~ R-1A.

(3) ~~No signs or advertising shall be permitted except one Class A sign.~~ Signs. See "Signs", Sec. 25-13.

~~(b)~~B. Building height limit. The maximum building height shall be two and one-half stories or thirty-five feet.

~~(c)~~C. Building site area required. The minimum building site area shall be one lot or parcel of land seven thousand five hundred (7,500) square feet in area for each one (single) family dwelling. Such parcels shall have a minimum average width of at least seventy-five (75) feet. Where a lot or parcel of land has an area of an average width less than the above required minimum and was so designated by a plat of record at the time of the passage of this chapter, said lot may be occupied by a one family dwelling, provided, however that the minimum side, front and rear yard requirements set out in this section are met. Two (2) or more lots or parcels of land may be joined for the purpose of creating a single minimum building site area. Lots or parcels of land of average width of more than fifty (50) feet but less than seventy-five (75) feet containing ~~more~~ no less than seven thousand five hundred (7,500) square feet, may be occupied by one (single) family dwelling, only, if the abutting lot or parcel cannot, because of diversity of ownership, be joined with the lot or parcel of substandard width to create an average minimum width of seventy-five (75) feet and the diversity of ownership existed prior to the passage of this ordinance. Minimum front, side and rear yard requirements applicable to all lots or parcels of land in this zoning district shall be required for any lot or parcel of substandard width.

~~(d)~~D. Front yard required. There shall be a front yard of a depth of not less than thirty feet, unless the average depth of the front yard of the contiguous lot or lots is either greater or less than thirty feet, in which case the front yard shall be the average depth of the front yard of the contiguous lot or lots. In case there is no dwelling on the block, the depth of the front yard shall be a minimum of thirty feet. The maximum depth of the front yard permitted shall be not more than fifty per cent of the depth of the lot or building site.

~~(e)~~E. Side yard required. ~~There shall be side yards, the width of each to be not less than ten per cent of the average width of the lots but in no case shall each side yard be less than five feet, except that for corner lots the side yard adjoining the street shall be not less than fifteen feet.~~ For every floor above the first floor, there must be an additional two and one half (2 1/2) feet setback on the sides; for two and one-half stories, 7 1/2' side yard setbacks, over and above the original 10% required. Side yards adjacent to the street shall not be less than fifteen (15') feet. * in both new and existing buildings,

~~(f)~~F. Rear yard required. There shall be a rear yard not less than twenty-five feet in depth.

~~(g)~~G. Floor area requirements. The minimum floor areas of dwellings in this district shall be fifteen hundred ~~(1500)~~ square feet.

~~(h)~~H. Off-street parking. Off-street parking shall be provided as is required in District R-EA ~~R-1A~~.

Sec. 34: That Section 25-21 of the Code of Ordinances be and the same is amended as follows:

Section ~~25-21~~ 25-18. Same - R-1AA ~~R-1C~~

~~(a)~~A. Uses permitted:

(1) One (single) family dwelling; in no case shall there be more than one main building on a lot.

(2) Accessory structures and uses incidental to such single family dwelling the same as in District R-EA ~~R-1A~~.

(3) ~~No signs or advertising shall be permitted except one Class A sign.~~ Signs. See "Signs", Sec. 25-13.

~~(b)~~B. Building height limit. The maximum building height shall be two and one-half stories or thirty-five feet.

~~(c)~~C. Building site area required. The minimum building site area shall be one lot or parcel of land six thousand (6,000) square feet in area for each one (single) family dwelling. Such parcels shall have a minimum average width of at least seventy-five (75) feet. Where a lot or parcel of land has an area or an average width less than the above required minimum and was so designated by a plat of record at the time of the passage of this chapter, said lot may be occupied by a one family dwelling provided, however, that the minimum side, front and rear yard requirements set out in this section are met. Two (2) or more lots or parcels of land may be joined for the purpose of creating a single minimum building site area. Lots or parcels of land of average width of more than fifty (50) feet but less than seventy-five (75) feet containing ~~more~~ no less than six thousand (6,000) square feet, may be occupied by one (single) family dwelling, only, if the abutting lot or parcel cannot, because of diversity of ownership, be joined with the lot or parcel of substandard width to create an average minimum width of seventy-five (75) feet and the diversity of ownership existed prior to the passage of this ordinance. Minimum front, side and rear yard requirements applicable to all lots or parcels of land in this zoning district shall be required for any lot or parcel of substandard width.

~~(d)~~D. Front yard required. There shall be a front yard of a depth of not less than thirty feet, unless the average depth of the front yard of the contiguous lot or lots is either greater or less than thirty feet, in which case the front yard shall be the average depth of the front yard of the contiguous lot or lots. In case there is no dwelling on the block, the depth of the front yard shall be a minimum of thirty feet. The maximum depth of front yard permitted shall be not more than fifty percent of the depth of the lot, or building site.

~~(e)~~E. Side yard required. ~~There shall be side yards, the width of each to be not less than ten per cent of the average width of the lot but in no case shall each side yard be less than five feet, except that for corner lots the side yard adjoining the street shall be not less than ten feet.~~ For every floor above the first floor, in both new and existing buildings, there must be an additional two and one half (2 1/2) feet set back on the sides; for two and one-half (2 1/2) stories, seven and one-half (7 1/2) feet side yard set-backs over and above the original ten (10) per cent required. Side yards adjacent to the street shall not be less than fifteen (15') feet.

~~(f)~~F. Rear yard required. There shall be a rear yard not less than twenty-five feet in depth.

~~(g)~~G. Floor area requirements. The minimum floor areas of dwellings in this district shall be ~~twenty hundred~~ twelve hundred (1200) square feet.

~~(h)~~H. Off-street parking. Off-street parking shall be provided as is required in District R-EA R-1A.

Sec. 35: That Section 25-22 of the Code of Ordinances be and the same is amended as follows:

Sec. ~~25-22.~~ 25-19. Same - R-1A R-1D

~~(a)~~A. Uses permitted:

(1) Any use permitted in R-1AA R-1C.

(2) Accessory structure and uses incidental to such single family dwelling, the same as in District R-1A.

~~(2)~~(3) ~~No signs or advertising shall be permitted except one Class A sign.~~ Signs. See "Signs", Sec. 25-13.

~~(b)~~B. Building height limit. The maximum building height shall be two and one half stories or thirty-five feet.

~~(c)~~C. Building site area required. The minimum site area in the R-1A R-1D District shall be one lot or parcel of land five thousand (5000) square feet in area for each one (single) family dwelling. Such parcels shall have a minimum average width of at least seventy-five (75) feet.

Two (2) or more lots or parcels of land may be joined for the purpose of creating a single minimum building site area. Lots or parcels of land of average width of more than fifty (50) feet but less than seventy-five (75) feet containing ~~more~~ no less than five thousand (5,000) square feet, may be occupied by one (single) family dwelling, only, if the abutting lot or parcel cannot, because of diversity of ownership,

be joined with the lot or parcel of substandard width to create an average minimum width of seventy-five (75) feet and the diversity of ownership existed prior to the passage of this ordinance. Minimum front, side and rear yard requirements applicable to all lots or parcels of land in this zoning district shall be required for any lot or parcel of substandard width.

(d)D. Front yard required. There shall be a front yard of a depth of not less than thirty feet, unless the average depth of the front yard of the contiguous lot or lots is either greater or less than thirty feet, in which case the front yard shall be the average depth of the front yard of the contiguous lot or lots. In case there is no dwelling on the block, the depth of the front yard shall be a minimum of thirty feet. The maximum depth of front yard permitted shall be not more than fifty per-cent of the depth of the lot, or building site.

(e)E. Side yard required. ~~There shall be side yards, the width of each to be not less than ten per cent of the average width of the lot but in no case shall each side yard be less than five feet; except that for corner lots the side yard adjoining the street shall be not less than ten feet.~~ For every floor above the first floor, in both new and existing buildings, there must be an additional 2 1/2 feet set-back on the sides; for two and one-half stories 7 1/2' side yard set-backs, over and above the original 10% required. Side yards adjacent to the street shall not be less than fifteen (15') feet.

(f)F. Rear yard required. There shall be a rear yard not less than twenty-five feet in depth.

(g)G. Floor area requirements. The minimum floor areas of dwellings in this district shall be one thousand square feet.

(h)H. Off-street parking. Off-street parking shall be provided as is required in District R-EA R-1A.

Sec. 36: That Section 25-23 of the Code of Ordinances be and the same is amended as follows:

Sec. ~~25-23.~~ 25-20. Duplex District; ~~R-1AAA~~ R-2.

(a)A. Uses permitted:

(1) Any use permitted in ~~R-1AAA~~ R-1C.

(2) Multiple family dwelling consisting of one building containing two separate and distinct living units, commonly known as a duplex.

(3) Signs. See "Signs", Sec. 25-13.

(b)B. Building height limit. The maximum building height shall be two and one-half stories or thirty-five feet.

Accessory buildings and structures customarily incident to any of the above uses, when occupying

not more than fifteen per-cent of the required rear yard, and located on the same lot and not involving the conduct of business. No accessory building shall be located closer than five feet to any boundary line of the premises and shall conform in design, construction and character to that of the main building.

~~(c)~~C. Building site area required. The minimum building site area in the ~~R-1AAA~~ R-2 district shall be one lot or parcel of land seventy-five hundred square feet in area for each dwelling. Such parcels or lots shall have an average width of seventy-five feet.

~~(d)~~D. Front yard required. There shall be a front yard of a depth of not less than thirty feet, unless the average depth of the front yard of the contiguous lot or lots is either greater or less than thirty feet, in which case the front yard shall be the average depth of the front yard of the contiguous lot or lots. In case there is no dwelling on the block, the depth of the front yard shall be a minimum of thirty feet. The maximum depth of the front yard permitted shall be not more than fifty per-cent of the depth of the lot, or building site.

~~(e)~~E. Side yard requirements. There shall be side yards, the width of each to be not less than ten per-cent of the average width of the lot but in no case shall each side yard be less than five feet, except that for corner lots the side yard adjoining the street shall be not less than ten feet.

~~(f)~~F. Rear yard requirements. There shall be a rear yard not less than twenty-five feet in depth.

~~(g)~~G. Floor area requirements. The minimum floor areas of dwelli gs in this district shall be ~~seven-hundred-fifty~~ eight hundred square feet per living unit.

~~(h)~~H. Off-street Parking. ~~Parking-areas-to-provide-off-street-parking-as-required-by-this-ordinance and/or-for-use-of-the-general-public, except-that no-such-parking-area-shall-involve-the-conducting of-business-or-be-operated-commercially-or-for private-profit.~~ Off-street parking shall be provided as is required in District R-1A.

Sec. 37: That Section 25-24 of the Code of Ordinances be and the same is amended as follows:

Sec. ~~25-24.~~ 25-2E. Multiple family district - ~~R-2AA~~ R-3A.

A. Uses permitted:

(1) Any use permitted in the ~~R-5A~~ R-1A District and conforming to the regulations for that district.

(2) Multiple family dwelling, apartment house, ~~group-houses-or-court-apartments~~ not to exceed seven (7) units.

(3) Hotels; provided, that where food and/or beverages of any kind are sold, or shops or other service utilities or facilities are made available, such facilities shall be located and conducted entirely within said hotel building in such manner that no sign, advertisement or other appearance or indication of the existence of such service facility, nor any activity of whatsoever nature connected therewith shall be visible at any time or in any manner from any public street, avenue, walk or other public way, and such service facility shall not be accessible to patron thereof. ~~directly from a public street or way, nor indirectly, by means of any vestibule, foyer, entryway or room; unless such entryway is accessible only from the main entrance and main lobby of the hotel such entrance or lobby has been designated on plans for the construction or alterations of said hotel building filed with and approved by the building inspector; and provided, further that such service facility may be accessible to patrons thereof from a patio, yard, court or other open area adjoining the hotel building where such area is enclosed on the side or sides abutting or visible from any public street or other public way by an opaque wall containing no facilities for entrance into such open area from the exterior of the wall.~~ Signs. See "Signs", Sec. 25-13.

(4) Accessory buildings and structures customarily incident to any of the above uses, when occupying not more than fifteen per cent of the required rear yard, and located on the same lot and not involving the conduct of business. No accessory building shall be located closer than five feet to any boundary line of the premises and shall conform in design, construction and character to that of the main building.

(5) ~~Parking areas to provide off street parking as required by this chapter and/or for use of the general public, except that no such parking area shall involve the conduct of any business operated commercially or for public profit.~~ Parking areas will provide off-street parking as required by this chapter and/or use by the general public in the amount of one and one half (1 1/2) parking spaces per unit with a minimum of twelve (12) spaces per seven (7) units.

~~(6) One Class A or one Class B sign, except that no Class B sign shall be permitted on vacant land or land occupied by a single or two family dwelling, nor shall any Class B sign be located in the minimum front, side or rear yards, as provided in this district. No flashing, blinking or neon electric signs shall be placed, either on the building or separately, facing any (R) district.~~

B. Building height limit. The maximum building height shall be ~~forty-five~~ forty feet or three stories~~, except in Airport Approach Zone as set forth in Section 25-6~~.

C. Building site area required:

(1) The minimum building area per family shall be a lot or parcel of land as follows:

(a) For one-family dwelling, ten thousand square feet per family unit.

~~(b) For a two-family dwelling, five thousand square feet per family.~~

~~(c)~~ (b) For a multiple-family dwelling, two-thousand four hundred square feet per family unit.

(2) For all main buildings permitted in this zone the building site area shall be not less than twice the ground-floor area of the building or buildings.

(3) The minimum front footage of a building site shall be seventy-five (75) feet.

(4) The total land that may be occupied by a structure shall not exceed thirty percent of the total~~ land area~~.

D. Floor area requirements. The minimum floor area requirement in multiple dwellings shall be ~~six hundred~~ eight hundred square feet for each one bedroom unit; ~~seven hundred~~ nine hundred and fifty square feet for each two bedroom unit; ~~nine hundred~~ eleven hundred square feet for each three bedroom unit. No bedroom shall have an exterior door opening to any outside hall or yard. There must be two exists and/or entrances to each apartment which has two or more bedrooms and they shall not be less than ten feet apart.

E. Front yard required. There shall be a front yard of not less than thirty feet (30') or the average depth of the front yard of the lot or lots next adjacent thereto on either side, whichever is the lesser of the two. Off-street parking shall be prohibited between the building and the front yard property line. The maximum front yard set-back shall be not more than fifty feet (50') of the depth of the lot or building site.

F. Side yard requirements:

(1) There shall be side yards, the width of each to be not less than ten per cent of the average width of the lot or parcel but in no case shall each side yard be less than ten feet for buildings one story in height. For buildings having additional stories, the side yard width shall be increased in increments of five feet for each additional story in height, except for corner lots, the side yard adjoining the street shall not be less than thirty feet.

(2) Where any lot or parcel of property in this district adjoins a single family residential district, there shall be side yards, the width of each to be not less than fifteen feet for a single story structure; for a two story structure, twenty feet; for a three story structure, twenty-five feet.

(3) Where any lot or parcel of property in this district adjoins a single family residential district, there shall be no off-street parking permitted in the minimum side yards.

G. Rear yard required. There shall be a rear yard of no less than thirty feet in depth.

~~H.--Additional-area-regulations.--In-the-case-of group-house-or-court-apartments,-buildings-may rear-upon-the-required-side-yard,-provided:-~~

~~(1)--The-minimum-side-yard-shall-be-twenty-feet.~~

~~(2)--The-width-of-the-court-shall-not-be-less than-two-times-the-width-of-the-side-yard as-required-in-this-provision,-provided-that open-unenclosed-porches-may-project-into-a required-court-not-more-than-twenty-percent of-the-width-of-such-court.~~

~~(3)--Where-a-roadway-is-provided-in-or-through the-court,-a-minimum-width-of-ten-feet-shall be-allowed-for-such-roadway-in-addition-to the-width-of-court-required-above.~~

~~(I)~~H. Protective screening. Where any lot or parcel of property adjoins a residential district, a five foot strip of land along the boundary of said residential district shall be set aside and used for planting or walls by the owner of said lot or parcel, at his expense, to form an effective screen for the protection of the residential area. No structure, except such screen or wall or utilities or drainage facilities shall be placed or permitted in such area. No vehicular access shall be permitted over the area, except for the installation or maintenance of screening, utilities and drainage facilities.

Sec. 38: That a new section to be numbered Section 25-22 of the Code of Ordinances be and the same is hereby enacted as follows:

Sec. 25- 22. Same - R-3B

A. Uses permitted:

(1) Any use permitted in the R-3A District and conforming to the regulations for that District.

(2) Guest houses, tourist homes, boarding and lodging houses, not to exceed fifteen (15) units.

(3) Accessory buildings and structures customarily incident to any of the above uses, when occupying not more than fifteen percent of the required rear yard and located on the same lot and not involving the conduct of a

business. No accessory building shall be located closer than five feet to any boundary line of the premises and shall conform in design, construction and character to that of the main building.

B. Signs. See "Signs", Sec. 25-13.

C. Off-street parking. Parking areas to provide off-street parking as required by this chapter and/or for use of the general public, except that no such parking area shall involve the conduct of any business operated commercially or for public profit.

D. Building height limit. The maximum building height shall be forty feet or three stories.

E. Building site area required. The minimum building area per family shall be a lot or parcel of land as follows:

(1) For a two family dwelling, ten thousand square feet per family unit.

(2) For a multiple family dwelling, two thousand four hundred square feet per family unit.

(3) The minimum front footage of a building site shall be seventy-five feet.

(4) The total land that may be occupied by a structure shall not exceed 30% of the total land area.

F. Floor area requirements. The minimum floor area requirement in multiple dwellings shall be seven hundred square feet for each one bedroom unit; eight hundred-fifty square feet for each two bedroom unit; one thousand square feet for each three bedroom unit. No bedroom shall have an exterior door opening to any outside hall or yard. There must be two exists and/or entrances to each apartment which has two or more bedrooms and they shall not be less than ten feet apart.

G. Front yard required. There shall be a front yard of not less than thirty feet or the average depth of the front yard of the lot or lots next adjacent thereto on either side, whichever is the lesser of the two. Off-street parking shall be prohibited between the building and the front yard property line. The maximum front yard set-back shall be not more than fifty per-cent of the depth of the lot or building site.

H. Side yard required.

(1) There shall be side yards, the width of each to be not less than ten per-cent of the average width of the lot or parcel but in no case shall each side yard be less than ten feet for buildings of one story in height. For buildings having additional stories, the side yard width shall be increased in increments of five feet for each additional story in height, except for corner lots, the side yard adjoining the street shall not be less than thirty feet.

(2) Where any lot or parcel of property in this district adjoins a single-family residential district, there shall be side yards, the width of each to be not less than fifteen feet for a single story structure; for a two-story structure, twenty feet; for a three story structure, twenty-five feet.

(3) Where any lot or parcel of property in this district adjoins a single-family residential district, there shall be no off-street parking permitted in the minimum side yards.

I. Rear yard required. There shall be a rear yard not less than twenty feet in depth.

J. Protective screening. Where any lot or parcel of property adjoins a residential district, a five foot strip of land along the boundary of said residential district shall be set aside and used for planting or walls by the owner of said lot or parcel, at his expense, to form an effective screen for the protection of the residential area. No structure, except such screen or wall or utilities or drainage facilities shall be placed or permitted in such area. No vehicular access shall be permitted over the area, except for the installation or maintenance of screening utilities and drainage facilities.

Sec. 39: That Section 25-25 of the Code of Ordinances be and the same is amended as follows:

Sec. ~~25-25~~, 25-22.1 - Same - R-2 R-3C.

~~(a)~~A. Uses permitted:

(1) Any use permitted in the R-1AA and R-2AA R-3A Districts and conforming to the regulations for ~~these~~ that Districts.

(2) Guest houses, tourist homes, boarding and lodging houses, not to exceed thirty (30) units.

(3) Accessory buildings and structures customarily incident to any of the above uses, when occupying not more than fifteen per cent of the required rear yard, and located on the same lot and not involving the conduct of a business. No accessory building shall be located closer than five feet to any boundary line of the premises and shall conform in design, construction and character to that of the main building.

~~(4)--Schools;-public-and-private,-except-correctional-institutions.~~

~~(10)~~B. ~~One-class-A-or-one-class-B-sign,-except-that-no class-B-sign-shall-be-permitted-on-vacant-land-or land-occupied-by-a-single-or-two-family-dwelling; nor-shall-any-class-B-sign-be-located-in-the-minimum front,-side-or-rear-yards,-as-provided-in-this district.~~ Signs. See "Signs", Sec. 25-13.

~~(5)--libraries,-community-centers-and-buildings used-exclusively-by-the-federal,-state, county-or-city-government-for-public-purposes.~~

~~(8)~~C. Parking areas to provide off-street parking as required by this chapter and/or for use for the general public, except that no such parking area shall involve the conduct of any business or be operated commercially or for private profit.

~~(6)--Churches,-and-other-places-of-worship, including-Sunday-school-building.~~

~~(7)--Parks,-recreation-grounds,-playgrounds-and playfields-under-the-supervision-of-the-city.~~

~~(9)--Public-utilities,-substations-and-facilities as-may-be-required-for-the-general-welfare-of the-city,-but-excluding-repair-and-storage facilities.~~

~~(b)~~D. Building height limit. The maximum building height shall be ~~forty-five~~ forty feet or three stories, ~~except-in-the-airport-approach-zone as-provided-in-section-25-6.~~

~~(c)~~E. Building site area required. The minimum building area per family shall be a lot or parcel of land as follows:

~~(2)~~(1) ~~For-a-one-family-dwelling---5,000-square feet-per-family.~~ For a two family dwelling - ~~2,500~~ 10,000 square feet per family unit.

~~(3)~~(2) For a multiple family dwelling - ~~1,500-square feet~~ 2,400 square feet per family unit.

~~(4)~~(3) The minimum front footage of a building site shall be 75 feet.

~~(5)~~(4) The total land that may be occupied by a structure shall not exceed 30% of the total land area.

~~(d)~~F. Floor area requirements. The minimum floor area requirement in multiple dwellings shall be six hundred (600) square feet for each one bedroom unit; seven hundred and fifty (750) square feet for each two bedroom unit; nine hundred (900) square feet for each three bedroom unit. No bedroom shall have an exterior door opening to any outside hall or yard. There must be two exits and/or entrances to each apartment which has two or more bedrooms and they shall not be less than ten feet apart.

~~(e)~~G. Front yard required. There shall be a front yard of not less than thirty (30') feet or the average depth of the front yard of the lot or lots next adjacent thereto on either side, whichever is the lesser of the two. Off-street parking shall be prohibited between the building and the front yard property line. The maximum front yard set-back shall be not more than fifty feet (50') of the depth of the lot or building site.

~~(f)~~H. Side yard required.

(1) There shall be side yards, the width of each to be not less than ten per-cent of the average width of the lot or parcel but in no case shall each side yard be less than ten feet for buildings of one story in height. For buildings having additional stories, the side yard width shall be increased in increments of five feet for each additional story in height, except for corner lots, the side yard adjoining the street shall not be less than thirty feet.

(2) Where any lot or parcel of property in this district adjoins a single-family residential district, there shall be side yards, the width of each to be not less than fifteen feet for a single story structure; for a two-story structure, twenty feet; for a three story structure, twenty-five feet.

(3) Where any lot or parcel of property in this district adjoins a single-family residential district, there shall be no off-street parking permitted in the minimum side yards.

~~(g)~~I. Rear yard required. There shall be a rear yard not less than twenty feet in depth.

~~(h)--Additional-area-regulations.--The-rear-of-groups houses-or-court-apartments,-buildings-may-give upon-the-required-side-yard,-provided:~~

~~(1)--The-minimum-required-side-yard-shall-be twenty-feet-in-width.~~

~~(2)--The-width-of-the-court-shall-not-be-less than-two-times-the-width-of-the-side-yard as-required-in-this-provision,-provided-that open-unenclosed-porches-may-project-into-a required-court-not-more-than-twenty-per-cent of-the-width-of-such-court.~~

~~(3)--Where-a-roadway-is-provided-in-or-through the-court,-a-minimum-width-of-ten-feet-shall be-allowed-for-such-roadway-and-shall-be-in addition-to-the-width-of-court-required-above.~~

J. Protective screening. Where any lot or parcel of property adjoins a residential district, a five foot strip of land along the boundary of said residential district shall be set aside and used for planting or walls by the owner of said lot or parcel, at his expense, to form an effective screen for the protection of the residential area. No structure, except such screen or wall or utilities or drainage facilities shall be placed or permitted in such area. No vehicular access shall be permitted over the area, except for the installation or maintenance of screening, utilities and drainage facilities.

~~(i)~~K. Parking Regulations.

(1) Hotels and hospitals shall provide adequate paved off-street parking spaces to accomodate all parked automobiles and shall provide a

minimum of one parking space for each of the first twenty rooms or suites, and one additional parking space for each two rooms or suites in excess of twenty.

(2) There shall be provided one and one-half paved off-street parking spaces on the lot to accomodate ~~one-and-one-half-(1-1/2)-automobiles-for-each~~ each unit or one such space per each bedroom, whichever is the greater number. In computing the total number, any fractional numbers will be completed to the next whole number. Such off-street parking shall be prohibited between the building and the front yard property line.

~~(3)--For-churches-the-number-of-parking-spaces required-shall-be-determined-by-dividing-the total-seating-capacity-by-seven-and-the number-of-spaces-shall-equal-the-quotient.~~

~~(4)~~(3) For any other permitted use there shall be one parking space for each five hundred square feet of the floor area in the building or fraction thereof.

~~(5)--Anything-hereinabove-to-the-contrary-notwithstanding,-no-hotel-or-motel-containing-more-than thirty-rooms-shall-be-constructed-in-any-R-2 Zone.--No-bedroom-or-living-room-in-such-hotel or-motel-shall-contain-less-than-two-hundred square-feet.~~

Sec. 40: That Section 25-26 of the Code of Ordinances be and the same is amended as follows:

Sec. ~~25-26~~ 25-23. ~~Local-retail-business-district-G-1A~~ Neighborhood commercial - B-1

~~(a)~~A. Uses permitted:

(1) Any use permitted in R-2 R-3C District when conforming to the regulations for that district.

~~(2)--The-following-uses-are-permitted-in-the-local retail-business-district-G-1A,-or-such-other uses,-in-compliance-with-the-intent-of-this section-as-shall-be-so-permitted-by-a-majority vote-of-the-city-council-of-Miami-Springs.~~

(2) Only retail uses shall be permitted in the business district B-1, in compliance with the intent of this section and shall include the following:

Agency, for employment, travel, and services to be performed elsewhere
Air conditioners, sales and service
Art or Photographic Studio (Commercial)
~~Antique-Shop~~
Automobile parts store, ~~retail-only~~
Bank, or other financial institutions
Bakery, when products are sold only at ~~retail~~ on the premises
Barbershops and beauty parlors, and physical ~~and-massage~~ clinics - ~~hours of-operation~~

In order to promote the public health, safety and welfare of the citizens of the City of Miami Springs, no barbershop, beauty parlor or physical therapy ~~and massage~~ clinic shall be open for business between the hours of 10:00 o'clock p.m. and 8:00 o'clock a.m. ~~of any day of the week; any barbershop, beauty parlor or physical therapy and massage clinic remaining open between the hours of 10:00 o'clock p.m. and 8:00 a.m. is hereby declared to be unlawful.~~

Beverage store; ~~retail only~~
Bicycle shop
Bookkeeping service
Business or commercial school
Butcher shop
Cabinet maker
Catering and delicatessen business
Clinical laboratory - only when sanitary and safe disposal of waste water is provided and when operated without producing smoke or noxious fumes, odors or noise
Clothing store
Coin collector, sales
Confectionery and ice cream store
Custom tailoring, dressmaking, or millinery
Dog grooming only - prohibiting a pet shop-type business or the boarding, maintaining or keeping of dogs on premises anytime between ~~6:00~~ 7:00 o'clock p.m. and 7:00 o'clock a.m.
Drugstore, department store or ten-cent store
Dry cleaning and laundry
Electrical appliances, ~~retail~~ sale and repair
Florist shop
Furniture, furnishings and decorations store; ~~retail only~~
Gift shop
Grocery store
Hardware store
~~Health studio~~
Instruments, aviation - marine wholesale sales and service
Interior decorators
Jewelry store
Laundry, self-service or laundromat, only; when sanitary and safe disposal of waste water is provided, and when operated without producing smoke or noxious fumes or odors
Lawnmower, rental, sales and service shop
Liquor stores; ~~retail~~
Loan companies
Locksmith shop
Luggage shop
Merchants: of fabrics, garden supplies, veterinary supplies
Motor scooters and motor bicycles - rental, sales, service and repair --~~retail only~~
Music, radio and television, ~~retail~~ sales, service and repair store, ~~retail~~ only
~~Natatorium~~
Offices, business and professional
Optical shop

Paint store
Parking lot or parking garage for storage only
Plumbers shop - no outside storage
Printing shop - not to exceed 2,500 Sq. Ft.
Post Office
Restaurant or cafeteria
~~Sales or show rooms~~
Shoe store or repair shop ~~retail only~~
Sporting goods store ~~retail~~
Stationery store
Sundry store
Telephone answering service
Theater or motion picture house
Toy shop
Travel Bureau

~~(a)~~B. ~~Class A and B signs only shall be permitted in this district.~~ Signs. See "Signs", Sec. 25-13.

~~(i)~~C. Parking space required. Where any building is erected or reconstructed for or converted to any business purposes permitted in this district, except bars or restaurants, there shall be provided off-street parking space in the ratio of not less than one parking space for each five hundred square feet of floor area in the building or fraction therof.

For bars and restaurants there shall be provided off-street parking in the ratio of one parking space for each five seats in lieu of the foregoing square footage requirements.

~~(b)~~D. Building height limit. The maximum building height shall be ~~forty-five~~ forty feet or three stories. ~~Provided, proposed buildings in the airport approach area shall be limited in height as prescribed by the building permit therefor.~~ Proposed buildings in the airport approach area shall be limited in height as prescribed by Section 25-6.

~~(c)~~E. Building site area required. The minimum building site area required shall be a lot or parcel of land twenty-five hundred square feet in area.

~~(d)~~F. Front yard required for a building designed for commercial use. All buildings shall be built to the front property line except as follows:

(1) A setback of fifteen feet may be permitted for beautification purposes only.

(2) Where frontage on the same street has an adjoining or abutting lot restricted to residential use, the front yard requirements of such residential district shall apply.

~~(e)~~G. Side yard required. No side yard is required for a building designed for commercial use, except where required for "protection screening" as required in subsection J.

~~(f)~~H. Rear yard required. There shall be a rear yard consisting of an area which is not less than thirty per cent of the area of the lot or building site to be improved, in order to provide space for ~~septic tanks~~ drains and other uses, except in those cases where the lot or building site abuts upon a dedicated alley which has a width of not less than forty feet, in which case the rear yard may be twenty per-cent of the lot or building site area.

~~(g)~~I. Floor area requirements. The minimum first floor area of a commercial building in this district shall be fifteen hundred square feet.

~~(h)~~J. Protective screening. Where any lot in this district adjoins a residential district, a five foot strip of land ~~along~~ adjoining the boundary of said residential district shall be set aside and used for planting or walls by the owner of said commercial lot at his expense, to form an effective screen for the protection of the residential area. No structure, except such screen or wall or utilities or drainage facilities, shall be placed or permitted in such area. No vehicular access shall be permitted over the area, except for the installation or maintenance of screening, utilities and drainage facilities.

K. Commercial installations for business purposes shall not include mixed use for living quarters.

Sec. 41: That Section 25-27 of the Code of Ordinances be and the same is amended as follows:

Sec. ~~25-27.~~ 25-24. ~~Limited commercial district, C-1.~~ Central Business district, B-2.

~~(a)~~A. Uses permitted:

(1) Any use permitted in ~~C-1A Local Business District~~ B-1 Neighborhood Commercial.

(2) The following uses are permitted in the ~~Limited Commercial District, C-1~~ Central Business District B-2.

Assembly and maintenance of small parts, such as radios, carburetors, electronic devices, small generators and cameras.
Auto rentals
Dry cleaning or dyeing
Garage, service and storage
Hotel
Laundry
Mail Order House
Mortuary or funeral parlor
Private club
Wholesale establishments

~~But excluding~~ However, the uses in this district shall exlude all industrial, or manufacturing plants, lumber yards, junk dealers, auto wrecking or any business where materials sold are not housed within a building or where the uses may be obnoxious or offensive to nearby residential districts by reason of odor, dust, smoke, gas, noise or vibration or anything which might constitute an eyesore or nuisance.

~~(a)~~B. ~~Only one Class A and B sign shall be permitted on any parcel, tract, lot or lots under one ownership in this district. All signs erected in any yard or open space shall be set back from all streets and public ways a distance equal to the height of the sign from grade to its uppermost point.~~ Signs. See "Signs", Sec. 25-13.

~~(i)~~C. Parking space required. Where any building is erected, reconstructed for or converted to any business purposes permitted in this district, except bars or restaurants, there shall be provided off-street parking spaces in the ratio of not less than one parking space for each five hundred square feet of floor area in the building or fraction thereof.

For bars or restaurants there shall be provided off-street parking in the ratio of one parking space for each five seats in lieu of the foregoing square footage requirements.

~~(b)~~D. Building height limit. The maximum building height shall be ~~forty-five~~ forty feet or three stories~~, except in the Airport Approach Zone as provided in Sec. 25-6~~.

~~(c)~~E. Building site area required. The minimum building site area required shall be a lot or parcel of land twenty-five hundred square feet in area.

~~(d)~~F. Front yard required for a building designed for commercial use. All buildings shall be built to the front property line except as follows:

(1) A setback of fifteen feet may be permitted for beautification purposes only.

(2) Where frontage on the same street has an adjoining or abutting lot restricted to residential use, the front yard requirements of such residential districts shall apply.

~~(e)~~G. Side yard required. No side yard is required for a building designed for commercial use, except where required for "protective screening." as ~~hereinafter provided~~.

~~(f)~~H. Rear yard required. ~~Unless otherwise provided on the lot, there shall be a rear yard required of not less than thirty per cent of the area of the lot or building site, to provide space for septic tanks, drains and other necessary uses.~~ There shall be a rear yard consisting of an area which is not less than thirty percent of the area of the lot or building site to be improved, in order to provide space for drains and other uses, except in those cases where the lot or building site abuts upon a dedicated alley which has a width of not less than forty feet, in which case the rear yard may be twenty per-cent of the lot or building site area.

~~(g)~~I. Floor area requirements. The minimum first floor area of a commercial building in this district shall be fifteen hundred square feet.

~~(h)~~J. Protective screening. Where any lot in this district adjoins a residential district, a five foot strip of land ~~along~~ adjoining the boundary of said residential district shall be set aside ~~and~~ for used for planting or walls by the owner of said commercial lot at his expense, to form an effective screen for the protection of the residential area. No structure, except such screen or wall or utilities or drainage facilities, shall be placed or permitted in such area. No vehicular access shall be permitted over the area except for the installation or maintenance of screening, utilities and drainage facilities.

K. Commercial installations for business purposes shall not include mixed use for living quarters.

Sec. 42: That Section 25-27.1 of the Code of Ordinances be and the same is amended as follows:

Sec. ~~25-27.1~~ 25-25. ~~Commercial district, C-2~~ Arterial Business district, B-3.

~~(a)~~A. Uses permitted.

(1) Any use permitted in ~~C-1 Limited Commercial District~~ B-2, Central Business District.

(2) The following uses are permitted in the ~~Commercial District C-2~~ Arterial District B-3, or such other uses as shall be in compliance with this section.

Automobile service station or filling station
Car lot for rental of automobile or commercial parking
Storage warehouse, excepting storage of chemicals, petroleum products or any dangerous, explosive or highly inflammable material

~~But excluding~~ However, the uses in this district shall exclude all industrial, or manufacturing plants, lumber yards, junk dealers, auto wrecking or any business where materials sold are not housed within a building or where the uses may be obnoxious or offensive to nearby residential districts by reasons of odor, dust, smoke, gas, noise or vibration, or anything which might constitute an eyesore or nuisance.

~~(a)~~B. ~~One Class A and B sign shall be permitted on any parcel, tract, lot or lots under one ownership in this district. All signs erected in any yard or open space shall be set back from all streets and public ways a distance equal to the height of the sign from grade to its uppermost point.~~ Signs. See "Signs", Sec. 25-13.

~~(i)~~C. Parking space required:

(1) Where any building is erected, reconstructed for or converted to any business purpose permitted in this district, except bars, restaurants or storage warehouses, there shall be provided off-street parking spaces in the ratio of not less than one parking space for each 500 square feet of floor area in the building or fraction thereof.

(2) For bars or restaurants, there shall be provided off-street parking spaces in the ratio of one parking space for each five seats in lieu of the foregoing square footage requirement set forth in (1) above.

(3) For storage warehouses, there shall be provided off-street parking spaces in the ratio of one parking space for each fifteen hundred square feet of floor area in the building or fraction thereof used for storage warehouse purposes in lieu of the foregoing square footage requirement set forth in (1) above.

(4) Whenever, after the date of this ordinance there is a change in the lawful use of the premises or building thereof or in any other unit of measurement specified in any of the foregoing paragraphs of this section and whenever such change creates a need for an increase or decrease of more than ten percent (10%) of the number of off-street automobile parking spaces as determined by the requirements of this section, more or less off-street parking facilities shall be provided prior to the approval of such change in the lawful use of the premises or building and it shall be unlawful for the building or premises to be used or occupied until there has been compliance with this section.

(5) In the case of mixed uses of a building or premise, the off-street parking facilities required shall be the sum of the requirements for the various individual uses computed separately in accordance with this subsection; off-street parking facilities for one use shall not be considered as providing the required off-street parking facilities for any other use.

~~(a)~~(4)(6) No automotive service station or filling station shall be erected or located within seven hundred fifty feet of the location of another automobile service station or filling station, or within fifteen hundred feet of a church or school, the said distance to be measured in a direct line.

~~(b)~~D. Building height limit. The maximum building height shall be ~~forty-five~~ forty feet or three stories~~, except in the Airport Approach Zone as provided by Sec. 25-6~~.

~~(c)~~E. Building site area required. The minimum building site area required shall be a lot or parcel of land fifteen thousand square feet in area.

~~(d)~~F. Front yard required for a building designed for commercial use. All buildings shall be built to the front property line, except as follows:

(1) A setback of fifteen feet may be permitted for beautification purposes only.

(2) Where frontage on the same street has an adjoining or abutting lot restricted to residential use, the front yard requirements of such residential districts shall apply.

~~(e)~~G. Side yard requirements. No side yard is required for a building designed for commercial use, except where required for "protective screening" as hereinafter provided.

~~(f)~~H. Rear yard requirements. ~~Unless otherwise provided on the lot or parcel of building site, there shall be a rear yard required of not less than thirty per cent of the area of the lot or building site to provide space for septic tanks, drains and other necessary uses.~~ There shall be a rear yard consisting of an area which is not less than thirty per-cent of the area of the lot or buiding site to be improved, in order to provide space for drains and other uses, except in those cases where the lot or building site abuts upon a dedicated alley which has a width of not less than forty feet, in which case the rear yard may be twenty per-cent of the lot or building site area.

~~(g)~~I. Floor area requirements. The minimum first floor area of a commercial building in this district shall be fifteen hundred square feet.

~~(h)~~J. Protective screening. Where any lot, parcel or building site in this district adjoins a residential district, a five foot strip of land ~~along~~ adjoining the boundary of said residential district shall be set aside and used for planting or walls by the owner of said commercial lot or parcel at his expense, to form an effective screen for the protection of the residential area. No structure, except such screen or wall or utilities or drainage facilities, shall be placed or permitted in such area. No vehicular access shall be permitted over the area, except for the installation or maintenance of screening, utilities and drainage facilities.

K. Limitations and special requirements.

(1) Lighting. Artificial lighting used to illuminate the premises and/or advertising copy, shall be directed away from any adjacent residential area and traffic flow. Such lighting shall be extinguished no earlier than one hour after closing.

(2) Outdoor storage. Outdoor storage of merchandise shall be permitted only when incidental to the commercial use located on the same premises provided that:

(a) The storage area shall not be located in any of the required setbacks or yards.

(b) The stored merchandise shall not protrude above the height of the enclosing walls or buildings.

L. Commercial installations for business purposes shall not include mixed use for living quarters.

~~(e)~~G. Side yard requirements. No side yard is required for a building designed for commercial use, except where required for "protective screening" as hereinafter provided.

~~(f)~~H. Rear yard requirements. ~~Unless otherwise provided on the lot or parcel of building site, there shall be a rear yard required of not less than thirty per cent of the area of the lot or building site to provide space for septic tanks, drains and other necessary uses.~~ There shall be a rear yard consisting of an area which is not less than thirty per-cent of the area of the lot or buiding site to be improved, in order to provide space for drains and other uses, except in those cases where the lot or building site abuts upon a dedicated alley which has a width of not less than forty feet, in which case the rear yard may be twenty per-cent of the lot or building site area.

~~(g)~~I. Floor area requirements. The minimum first floor area of a commercial building in this district shall be fifteen hundred square feet.

~~(h)~~J. Protective screening. Where any lot, parcel or building site in this district adjoins a residential district, a five foot strip of land ~~along~~ adjoining the boundary of said residential district shall be set aside and used for planting or walls by the owner of said commercial lot or parcel at his expense, to form an effective screen for the protection of the residential area. No structure, except such screen or wall or utilities or drainage facilities, shall be placed or permitted in such area. No vehicular access shall be permitted over the area, except for the installation or maintenance of screening, utilities and drainage facilities.

K. Limitations and special requirements.

(1) Lighting. Artificial lighting used to illuminate the premises and/or advertising copy, shall be directed away from any adjacent residential area and traffic flow. Such lighting shall be extinguished no earlier than one hour after closing.

(2) Outdoor storage. Outdoor storage of merchandise shall be permitted only when incidental to the commercial use located on the same premises provided that:

(a) The storage area shall not be located in any of the required setbacks or yards.

(b) The stored merchandise shall not protrude above the height of the enclosing walls or buildings.

L. Commercial installations for business purposes shall not include mixed use for living quarters.

Sec. 43: That Section 25-27.2 of the Code of Ordinances be and the same is amended as follows:

Sec. ~~25-27.2~~ 25-26. Professional Office Use district, ~~O-2~~ O-1.

A. There shall be a Professional Office Use District, ~~O-2~~ O-1, and ~~in this district, no building or premises shall be used, nor shall any building or structure be erected, altered or enlarged which is arranged, intended or designed to be used or occupied for any purpose except for one or more of the following uses:~~ the uses permitted in said district shall be any buisness or professional use similar in nature to those listed below. (These uses are listed for descriptive purposes only and are not intended to be exclusive.)

(A) Abstract title
~~Accounting/bookkeeping~~
Accounting and Auditing
Adjustors, Insurance
Advertising (no shops)
Agency (insurance, employment, travel)
~~Antique shop~~
~~Appraisers (no sales or rentals, or merchandise or equipment,)~~
~~Art or photographic studio~~
Architects
~~Auditors~~
Attorneys
~~Bank or other financial institutions~~
~~Barber shops or beauty shops (Subject to G-1A conditions~~
~~Business analyist~~
~~Business or commercial school~~
Building contractors (office only) ~~(no shops or storage),~~
Chiropractic
Clinical or laboratory (medical, dental, optical).
~~Clothing store~~
~~Confectionery and ice cream store~~
~~Court reporter or public stenographer~~
~~Credit reporting~~
~~Coin collector, sales~~
~~Custom tailoring, dress making or millinery~~
~~Department store~~
Dentist
~~Detective Agencies~~
~~Dry cleaning pick up and delivery only~~
~~Drug store or sundries shop~~
~~Engineers - professional~~
Engineering
Florist shop
Gift shop
Insurance ~~and bonds~~
Interior decorator
Investigative
Investment and tax counseling
~~Loan companies~~
Manufacturer's Agents
Market research
~~Medical doctors~~
Merchants
Model Agency (no school)
Mortgage Brokerage
~~Music store - radio and T.V., sales retail only~~

~~Notary Public~~
Nursing, convalescent, extended care homes, hospitals
~~Offices, business and professional~~
Optometrist
Planning and Zoning Consultants
Public Relations
Real Estate
Secretarial Services
Shoe store
~~Sporting goods - retail only~~
~~Stationery store~~
Stock Brokerage
~~Tax consultant~~
~~Telephone answering service~~
~~Toy shop~~
~~Zoning and planning consultants~~

~~(B) All other similar administrative offices or businesses which are not obnoxious or detrimental to the welfare of the particular area, any more than the enumerated firms. These shall be subject to the approval of the city council.~~

B. Signs. See "Signs", Sec. 25-13.

C. Parking space required:

(1) Where any building is erected, reconstructed for or converted to any business purpose permitted in this district, except bars, restaurants or storage warehouses, there shall be provided off-street parking spaces in the ratio of not less than one parking space for each 500 square feet of floor area in the building or fraction thereof.

(2) For bars or restaurants, there shall be provided off-street parking spaces in the ratio of one parking space for each five seats in lieu of the foregoing square footage requirement set forth in (1) above.

(3) For storage warehouses, there shall be provided off-street parking spaces in the ratio of one parking space for each fifteen hundred square feet of floor area in the building or fraction thereof used for storage warehouse purposes in lieu of the foregoing square footage requirement set forth in (1) above.

(4) Whenever, after the date of this ordinance there is a change in the lawful use of the premises or building thereof or in any other unit of measurement specified in any of the foregoing paragraphs of this section and whenever such change creates a need for an increase or decrease of more than ten per-cent (10%) of the number of off-street automobile parking spaces as determined by the requirements of this section, more or less off-street parking facilities shall be provided prior to the approval of such change in the lawful use of the premises or building and it shall be unlawful for the building or premises to be used or occupied until there has been compliance with this section.

(5) In the case of mixed uses of a building or premise, the off-street parking facilities required shall be the sum of the requirements for the various individual uses computed separately in accordance with this subsection; off-street parking facilities for one use shall not be considered as providing the required off-street parking facilities for any other use.

(6) No automotive service station or filling station shall be erected or located within seven hundred fifty feet of the location of another automobile service station or filling station, or within fifteen hundred feet of a church or school, the said distance to be measured in a direct line.

D. Building height limit. The maximum building height shall be forty feet or three stories.

E. Building site area required. The minimum building site area required shall be a lot or parcel of land fifteen thousand square feet in area.

F. Front yard required for a building designed for commercial use. All buildings shall be built to the front property line, except as follows:

(1) A setback of fifteen feet may be permitted for beautification purposes only.

(2) Where frontage on the same street has an adjoining or abutting lot restricted to residential use, the front yard requirements of such residential districts shall apply.

G. Side yard requirements. No side yard is required for a building designed for commercial use, except where required for "protective screening" as hereinafter provided.

H. Rear yard requirements. There shall be a rear yard consisting of an area which is not less than thirty per-cent of the area of the lot or building site to be improved, in order to provide space for drains and other uses, except in those cases where the lot or building site abuts upon a dedicated alley which has a width of not less than forty feet, in which case the rear yard may be twenty per-cent of the lot or building site area.

I. Floor area requirements. The minimum first floor area of a commercial building in this district shall be fifteen hundred square feet.

J. Protective screening. Where any lot, parcel or building site in this district adjoins a residential district, a five foot strip of land adjoining the boundary of said residential district shall be set aside and used for planting or walls by the owner of said commercial lot or parcel at his expense, to form an effective screen for the protection of the residential area.

No structure, except such screen or wall or utilities or drainage facilities, shall be placed or permitted in such area. No vehicular access shall be permitted over the area, except for the installation or maintenance of screening, utilities and drainage facilities.

K. Commercial installations for business purposes shall not include mixed use for living quarters.

Sec. 44: That Section 25-27.3 of the Code of Ordinances be and the same is hereby repealed.

~~Sec. 25-27.3 School Use Only District, SU-2.~~

~~There shall be a School Use Only District, SU-2 and this use shall be confined to private schools for educational purposes only, and excluding trade or vocational schools. Such administrative offices and equipment in normal use by such educational facilities shall be permitted.~~

Sec. 45: That a new section to be numbered Section 25-27 of the Code of Ordinances be and the same is hereby enacted as follows:

Sec. 25-27 Public Property District - P-1.

A. District purpose. The P-1 District is intended to provide for public recreational facilities as well as public uses of the federal, state, county and municipal governments. Recreational activities in the P-1 District will normally be conducted in the open air; however, related accessory uses may be located on the same plot in structures or buildings. The functional characteristics of a P-1 District may require its location within, or in close proximity to, residential areas or areas of natural beauty and scenic qualities.

B. Uses Permitted. No land, water, or structure may be used, in whole or in part, except for one or more of the following uses, or similar uses approved by the City Council.

(1) Public:

(a) Country Club.

(b) Golf Course.

(c) Shuffleboard Courts.

(d) Swimming Pool.

(e) Tennis Courts.

(f) Recreation or Community Centers.

(g) Public Parks and Open Spaces.

(2) Public pre-school, elementary, junior high or high schools.

(3) Libraries, museums, community centers.

(4) City Hall and other municipal governmental buildings necessary to the provision of municipal services.

(5) Publically owned and operated facilities of the federal, state, county or special purpose governmental unit necessary to the provision of services and facilities to residents of the community and surrounding areas.

C. Minimum Lot Area. The minimum lot area for uses which shall include a building in the P-1 District shall be 10,000 square feet.

D. Minimum Lot Width. None.

E. Minimum Yards. None.

F. Maximum Building Height. The maximum allowable building height in P-1 District shall be forty (40) feet.

G. Signs. See "Signs", Sec. 25-13.

H. Parking. See "Off-Street Parking".

I. Limitations and Special Requirements.

(1) The operation of any recreation area shall, regardless of anything else in this section, be subject to the reasonable control and direction of the City of Miami Springs.

(2) All yards and open spaces adjacent to streets and contiguous to residential areas shall be planted and properly maintained with suitable planting in the form of grass, shrubs, hedges, and trees to present an attractive appearance to the neighborhood.

(3) Any site upon which a golf course is developed, shall be landscaped and maintained in a neat and clean, live, healthy and growing condition, properly watered and trimmed, free of any refuse, structure or debris, for a distance of not less than 100 feet from any abutting property zoned for residential use.

(4) All uses in the P-1 District shall provide the required parking as outlined in this zoning ordinance, for such use.

(5) The site development plan for a plot in P-1 District shall provide for such an arrangement and location of uses and facilities on the plot as to give maximum possible separation from, and protection to, contiguous and nearby residential property. Where the nature of the activities or facilities on the plot present any potential hazard or detriment to contiguous residential properties from noise, glare, odors, smoke, vibration, flying objects or traffic, protection to such contiguous residential properties shall be provided in the form of open space, fences, walls, hedges, enclosures and/or by such other means as may be appropriate and effective to prevent or minimize such hazards.

Sec. 46: That Section 25-18 of the Code of Ordinances be and the same is amended as follows:

Sec. ~~25-18~~ 25-28 Church Use Only - P-2 District

~~(a)~~A. Uses permitted. Any building used for church services, Sunday school instruction or other activities directly connected with the normal operation of a church.

~~(b)~~B. Building height limits. ~~The maximum building height shall be two and one-half stories or thirty-five feet, whichever is lower.~~ The maximum building height shall be forty feet.

~~(c)~~C. Site. ~~The minimum building site shall be three acres, or the square feet equivalent thereof.~~ The minimum building site shall be governed by the number of off-street parking spaces which the site will accomodate in proportion to the size of the building, as provided by this chapter and subject to limitations as herein provided for front, rear and side yard requirements.

~~(d)~~D. Front, side and rear yard requirements. No structure in this area shall be built closer than thirty feet to the exterior property lines of the minimum building site as herein required.

E. Signs. See "Signs", Sec. 25-13.

~~(e)~~F. ~~Off-street~~ Parking. ~~The off-street parking requirements for such district shall be as is provided for by this chapter.~~ The number of parking spaces required shall be determined by dividing the total seating capacity by seven and the number of spaces shall equal the quotient.

47: That Section 25-28 of the Code of Ordinances be and the same is hereby repealed.

~~Sec. 25-28. Nonrevenue off-street parking zone R-1.~~

~~The following nonrevenue off-street parking zone is hereby created, in which the uses, as hereinafter enumerated shall be permitted, that is to say:~~

~~(a) Any use permitted in the R-AAA District and conforming to the regulations for such district.~~

~~(b) Off-street parking without charge for automobiles provided that where an area exceeding twenty-five hundred (2500) square feet is used for such off-street nonrevenue parking, such use shall be subject to the following terms and conditions for the duration of such use:~~

~~(1) Said area may not be improved by the building of any structure thereon and is not to be used for any purpose other than such parking.~~

~~(2) No charge of any sort shall be made for the parking of automobiles.~~

~~(3) Where said area adjoins any premises which are used for the purposes permitted in the R-AAA District, said area shall be screened by use of walls, trees, or shrubbery of sufficient height to screen the parking area from said R-AAA premises.~~

48: That Section 25-29 of the Code of Ordinances be and the same is amended as follows:

Sec. 25-29. Non-conforming Uses.

A. A non-conforming use of a building, or portion thereof, or of land, which use existed lawfully at the time of adoption or subsequent amendment of this chapter, may be continued, provided that:

~~(a)~~(1) No building which has been damaged by fire, explosions, act of God or the public enemy, to the extent of more than fifty per-cent of the replacement value of the building immediately prior to the damage, shall be restored except in conformity with the ~~regulations in~~ requirements of this ~~chapter~~ ordinance.

~~(b)~~(2) No building or portion thereof, or land used in whole or in part, for non-conforming purposes according to the provisions of this ~~chapter~~ ordinance which hereafter becomes and remains vacant for a continuous period of ~~six (6)~~ three (3) months, shall again be

used except in conformity with the regulations of for the district in which such building or land is situated.

~~(c)~~(3) A non-conforming use of a building or land shall not be extended or enlarged.

~~(d)~~(4) A non-conforming structure that was erected, converted, or structurally altered in violation of the provisions of the ordinance which this chapter supercedes, shall not be validated by the adoption of this chapter, and such violations or any violations of ~~the~~ this ordinance may be ordered removed or corrected by the proper officials at any time.

~~(e)~~(5) The lawful use of land for storage purposes, or for advertising signs and billboards, which does not conform to the provisions of this chapter, shall be discontinued within three (3) years from the date of the adoption of this chapter, and the uses of land which become non-conforming by reason of a subsequent change in this chapter shall also be discontinued within three years from the date of the change.

~~(f)~~(6) Whenever a non-conforming use of a building has been changed to a conforming use, such use shall not thereafter be changed to a non-conforming or less restricted use.

(7) Once a non-conforming use is abandoned for a continuous period of three (3) months, it can not be re-established until it conforms to the provisions of this chapter.

Sec. 49: That Section 25-30 of the Code of Ordinances be and the same is amended as follows:

Sec. 25-30. Zoning and planning board - Appointment; terms; vacancy.

A. A zoning and planning board is hereby created and established. Said board shall consist of five (5) members who shall be appointed by the mayor with the consent of the council.

B. One member shall be appointed each year for a three (3) year term. If, for any reason, an appointment should not be made by the required date, the incumbent will continue to serve until his successor has been appointed.

C. In the event of the death or resignation of a member, or his failure to attend any meeting for a period of sixty (60) days, a successor shall be appointed by the mayor with the consent of the council to fill the unexpired term. Consideration of cases brought before the board will be resolved by the board in the form of decisions passed by majority vote of the entire board.

Sec. 30: That the fourth (4th) paragraph of Section 25-30 of the Code of Ordinances be and the same is hereby amended by assigning a section number and title and additional stipulation, as follows:

Sec. 25-30.1. Same - Duties.

A. The zoning and planning board shall act only as a recommending or advisory body and it recommendations shall be subject to the final action of the city council. Secretarial assistance furnished by the Building and Zoning Department.

Sec. 31: That Section 25-31 of the Code of Ordinances be and the same is amended as follows:

Sec. 25-31. ~~Same~~ Jurisdiction and powers

A. The zoning and planning board shall have the following jurisdiction and powers:

~~(a)~~(1) To prescribe rules and regulations and the form of applications to be used by applicants for variances under the provisions of this chapter.

~~(b)~~(2) To make surveys, from time to time, of the city and to make recommendations to the Council concerning all changes to be made in the zoning ordinances of the City.

~~(c)~~(3) To call, hear and consider all applications for changes in the use requirements established in any district by this chapter, and to make findings and recommendations to the City Council.

~~(d)~~(4) To receive and approve all new subdivision plats before submission to Council.

Sec. 32: That Section 25-31.1 of the Code of Ordinances be and the same is amended as follows:

Sec. 25-31.1 ~~Same~~ Fees.

Each application filed with the zoning and planning board shall be accompanied by the payment of the sum of one hundred dollars ($100.00) to defray the costs and expenses incident to passing upon the application.

Sec. 33: That Section 25-31.2 of the Code of Ordinances be and the same is amended as follows:

Sec. 25-31.2 Petition for zoning change; ~~consideration, protest, report.~~

~~(a)~~A. Any person desiring the change or modification in the classification or regulation affecting any property shall file his petition in writing with the zoning and planning board, setting forth the desired change or

modification, and shall accompany said petition with a written consent of not less than twenty (20%) per-cent of the property owners, exclusive of the petitioner, within a five hundred (500) foot radius in all directions from all property lines of the property involved in the classification or regulation of which it is proposed to change or modify; and the petitioner shall file with the zoning and planning board, as a condition precedent to the processing of this application, the names and addresses of all property owners as reflected by the property ~~attached~~ records of Miami Springs, within a five hundred (500) foot radius in all directions from all the property lines. It shall be the responsibility of the applicant for zoning changes to file with the zoning and planning board a map showing the land to be rezoned, together with all land within five hundred (500) feet of the land to be rezoned showing the zoning of each parcel.

~~B.~~ B. Upon receipt of the same, the zoning and planning board shall then cause a notice of the time and place of the hearing on the property and the type of zoning requested, providing that the petitioner has deposited with the board one hundred ($100.) dollars to be used in payment of costs of publishing and mailing notices. Notices shall be mailed by the zoning and planning board to all owners of record within five hundred (500) feet in all directios of all property lines, and the tax records of the City of Miami Springs shall be used to indicate ownership within five hundred (500) feet of the land to be rezoned.

C. The zoning and planning board meets the first Wednesday of every month on a regular basis: Emergency meetings can be called by the action of the Mayor, Chairman of the Board, by any City Council Person or the City Manager.

D. Application to the regular meeting close on the 20th day of the month preceding, to allow time for research, notices, posting and other preparations.

E. Any zoning change within the boundaries of the City of Miami Springs shall follow procedures as set forth in Sec. 1.04, paragraph 3 of the City Charter.

Sec. 54: That Section 25-32 of the Code of Ordinances be and the same is amended as follows:

Sec. 25-32. Board of Adjustment - ~~Created; Appointment~~; terms; vacancy ~~rules and regulations; records; meetings.~~

A. There is hereby created and established a board of adjustment which shall consist of five (5) members appointed by the mayor

with the consent of the council and who shall be removable for cause upon written charges after a public hearing. One member shall be appointed each year for a three (3) year term. If, for any reason, an appointment should not be made by the required date, the incumbent will continue to serve until his successor has been appointed In the event of the death or resignation of a member or his failure to attend any meeting for a period of sixty (60) days, a successor shall be appointed by the mayor with the consent of the council to fill the unexpired term.

B. The board of adjustment shall prescribe and adopt rules and regulations for proceedings hereunder. Meetings of the board of adjustment shall keep minutes of its proceedings showing the vote of each member upon each question or, if absent or failing to vote, indicating such fact, and shall keep records of its examinations and other official actions, all of which shall be immediately filed in the office of the board and shall be a public record.

Sec. 35: That Section 25-33 of the Code of Ordinances be and the same is amended as follows:

Sec. 25-33. Same - Appeals. ~~powers and duties; variances~~

A. When there are practical difficulties or unnecessary hardships in the way of carrying out the strict letter of this chapter, appeals to the board may be taken by any person aggrieved or by any department of the governing body of the city, affected by any decision of the administrative official. In its determination of what shall constitute such hardship as to warrant relief on appeal, the board shall not be bound by financial considerations affecting the appellant.

B. The board shall have the following duties and powers:

~~(a)~~(1) To hear and decide appeals where it is alleged there is error in any order, requirement, decision or determination made by the administrative official in the enforcement of this chapter.

~~(b)~~(2) To authorize upon appeal in specific cases such variance from the terms of this chapter as will not be contrary to the public interest where, owing to special conditions, a literal enforcement of the provision of the chapter will result in unnecessary hardship, and so that the spirit of the chapter shall be observed and substantial justice done.

~~(c)~~(3) In exercising the powers set forth in subsections (1) and (2), the board shall act on all matters upon a majority vote of ~~those present~~ the entire board, a majority of the board being necessary for a quorum, but less than a quorum may adjourn to a specific time. The board may reverse or affirm, requirement, decision or determination appealed from and may make such order, requirement, decision or determination as ought to be made, and to that end shall have all the powers of the official from whom the appeal is taken.

~~(d)~~(4) In considering all proposed variations to this chapter, the board shall, before making any findings in a specific case, first determine that the proposed variation will not constitute any change in the districts shown on the zoning map and will not impair an adequate supply of light and air to adjacent property, or materially increase the danger of fire, or materially diminish or impair established property values within the surrounding area, or in any other respect impair the public health, safety, morals and general welfare of the city.

~~(e)~~(5) Any variance granted either by the board of adjustment or by the city council shall be null and void if the applicant does not obtain a building permit and commence construction within one (1) year of the date of the granting of the variance. If unusual circumstances exist, and the applicant applies to the board of adjustment or the city council, whichever granted the variance, for an extension, the variance may be extended by the board or the council for an additional six-month period. No extensions beyond the time periods specified above are authorized.

C. The Board of Adjustment meets the first Wednesday of every month on a regular basis. Emergency meetings can be called by action of the Mayor, Chairman of the board, any City Council person or the City Manager.

D. Applications to the regular meeting close on the 20th day of the month preceding, to allow time for research, notices, posting and other preparations. Secretarial assistance furnished by the Building and Zoning Department. Consideration of cases brought before the board will be resolved by the board in the form of decisions passed by majority vote of the entire board.

E. Chairman of the board will instruct all applicants that, if they wish to appeal the decision of the board, they must make a request by letter to the City Manager within ten (10) days. All appeals must be accompanied by the payment of twenty-five ($25.00) dollars, which amount will cover a second series of notices, posting and other preparations.

Sec. 56: That Section 25-33.1 of the Code of Ordinances be and the same is amended as follows:

Sec. 25-33.1. Same - Fees.

A. No application to the board of adjustment shall be considered unless the applicant shall have first paid a fee to the ~~city clerk~~ City Finance Department, in the sum of ~~fifteen ($15.00) dollars~~ fifty ($50.00) dollars to cover the cost of making the investigations necessary to a consideration of the matter, the mailing of notices and the preparation of such documents for the building inspector, as may be considered sufficient to facilitate the proper consideration of the application by the board.

B. At or before the time of the hearing, the applicant shall also submit a recent survey of the property in question showing the boundary lines, together with the boundaries of the proposed additions for which a variance is applied for. In the event the building inspector deems it reasonably necessary to a proper consideration of the application, he may require the applicant to furnish, in addition to the above matters, a photograph measuring eight (8) inches by ten (10) inches of the property in question.

Sec. 57: That Section 25-33.2 of the Code of Ordinances be and the same is amended as follows:

Sec. 25-33.2 Same - Actions subject to City Council; Fees.

A. Nothing herein contained is intended to restrict or in any way interfere with the power of the city council to set aside, annul or modify any order or decision of said board of adjustment or zoning and planning board. An administrative charge of twenty-five ($25.00) dollars will be paid by an appellant from either the zoning and planning board or board of adjustment prior to hearing by council.

B. The following is the procedure to be followed in appeals from decisions of the board of adjustment or zoning and planning board, to wit:

(1) Following the decision of the board of adjustment or the zoning and planning board on the first Wednesday of every

month, any citizen or governmental official may request a further hearing on the decision, in the nature of an appeal, within ten (10) days following the decision which would then be heard on the last Wednesday of each month by the city council sitting as an appellate review board.

(2) At the next regular city council meeting following action by either board, the city council shall indicate their desire to hold a further hearing on any board decision. If no further hearing is requested by council at this time, the council shall pass a motion approving the board's decision conditioned upon the expiration of the ten (10) day appeal period for appeals by any other interested persons without receiving a request for a further hearing on the matter.

(3) If no request for a further hearing is received by the expiration of the ten (10) day appeal period, then the motion approving the board's decision shall become final.

(4) Should any citizen or governmental official request a further hearing on any board's decision, the city council shall sit as an appellate review board on the last Wednesday of every month, at which time it shall hold a further evidentiary hearing on each appealed matter.

(5) Any further hearing on any board's decision shall be advertised in such a way as to give all interested parties adequate notice of the hearing and an opportunity to prepare their presentation, if any, before the city council sitting in review of any decision.

Sec. 58: That Section 25-35 of the Code of Ordinances be and the same is amended as follows:

Sec. 25-35. Amendments; hearing; notice.

~~(a)~~A. Upon recommendation from the city zoning and planning board, or on its own motion, the city council may, from time to time, amend, supplement, change or repeal the regulations, restrictions or district boundaries set out in this chapter ~~as provided for in the city charter. However, no such regulations, restriction or boundary change shall become effective until after a public hearing in relation thereto. At least fifteen (15) days notice of the time and place of such hearing shall be published in a newspaper of general circulation in said municipality.~~ in accordance with Section 1.04(3)(a)(b) and (c) of the city charter.

~~(b) In case, however, that the zoning and planning board disapproved the change, or protest against such change signed by the owners of twenty (20%) percent or more either of the area of the lots included in such proposed change, or of those immediately adjacent in the rear thereof extending five hundred feet therefrom, or those directly opposite thereto extending five hundred feet from the street frontage of such opposite lots, such amendments shall not become effective except by the favorable vote of three-fourths of the governing body of said municipality.~~

~~(c)~~ B. Notwithstanding any other provisions contained in this Code, the city ~~administrator~~ manager and/or the city council may impose building and zoning moratoria in accordance with the procedures herein established.

Sec. 59: That Section 25-36 of the Code of Ordinances be and the same is amended as follows:

Sec. 25-36. Enforcement; violations.

A. The building inspector and code enforcement officer ~~is~~ are hereby designated and authorized to enforce this chapter under the direction of the ~~director of building and zoning~~ city manager.

B. Any person violating any of the provisions of this chapter shall be guilty of an offense against the city. ~~Violations of subsection (2) of section 25-24 shall subject the violator to revocation of his license or permit at the discretion of the city council.~~ The owner of any buildings or premises or part thereof where anything in violation of this chapter shall be placed, or shall exist, and any architect, builder, contractor, agent or person employed in connection therewith and who may have assisted in the commission of any such violation shall be guilty of a separate offense.

C. Any person, firm or corporation who violates, disobeys, omits, neglects or refuses to comply with or who resists the enforcement of any of the provisions of this chapter shall be punished as provided ~~by~~ in section 1-8. Each day that a violation is permitted to exist shall constitute a separate offense.

Sec. 60: That Section 25-37 of the Code of Ordinances be and the same is amended as follows:

Sec. 25-37. Administrative Building Moratoria.

~~(a)~~ A. Whenever it shall be made to appear to the city ~~administrator~~ manager that it is in the public interest to make a comprehensive

determination as to whether existing zoning districts applying to a portion of the area of the City of Miami Springs are appropriate, and it is further made to appear to him that the said existing zoning districts may be detrimental to the said area should they continue to remain applicable and building permits be issued predicated thereon, notwithstanding any other provision to the contrary, the city ~~administrator~~ manager shall immediately instruct the city clerk to call an emergency meeting of the city council within twelve (12) hours to consider the imposition of a moratorium, and the city ~~administrator~~ manager shall further instruct the city clerk to post public notice of such meeting in an appropriate place in the ~~city-hall~~ Recreation Center, Field House, Public Library, and, unless otherwise forbidden, in a conspicuous place in the United States Post Office in the City of Miami Springs, and in such other locations as the council may direct, and to advise the news media of such meeting. If a majority of the council~~men members~~ present at such meeting concur in the aforesaid determination of the city ~~administrator~~ manager, then they shall by resolution delineate the area in question and prohibit the issuance of building permits thereon. If such a meeting of the city council cannot be called because a quorum of the city council, as defined in the Charter and Code of the City of Miami Springs cannot be present at such meeting, or if such meeting is called and a quorum of the city council is not present at the scheduled time and place, then the city ~~administrator~~ manager may immediately issue his administrative order delineating the area in question and prohibiting the issuance of building permits thereon. The city ~~administrator's~~ manager's determination shall be predicated on a consideration of the comprehensive plan and shall be designed to lessen congestion in the streets; to secure safety from fire, panic and other dangers; to promote health and the general welfare; to provide adequate light and air; to prevent the overcrowding of land; to avoid undue concentration of population; to facilitate the adequate provision of transportation, water, sewerage, schools, parks, and other public requirements; and with reasonable consideration, among other things, to the character of the district and its peculiar suitability for particular uses, and with a view to conserving the value of buildings and encouraging the most appropriate use of land throughout the city.

~~(b)~~B. Any resolution or administrative order issued pursuant to subsection (A) shall be complied with by all city personnel and shall be effective until reversed, modified or superseded by order of the city council.

~~(c)~~ C. Immediately upon issuance of any resolution or administrative order pursuant to subsection ~~(a)~~ (A), the city ~~administrator~~ manager shall notify the city clerk, whose duty it shall be to place the matter before the city council for consideration and review following a public hearing as soon as is reasonably practicable.

~~(d)~~ D. The aforesaid clerk shall give reasonable notice by publication in a newspaper of general circulation in the City of Miami Springs of the public hearing which she has scheduled before the city council.

~~(e)~~ E. At the public hearing the city council shall inquire into the propriety of a building moratorium and may reverse, modify or supersede any moratorium order previously issued. The council's determination shall be predicated upon the reasonable necessity for a detailed comprehensive analysis of the area in question and the probability of detriment to the character of the area by the continued application of the existing zoning districts.

~~(f)~~ F. Should the city council determine that a building moratorium is reasonably necessary, it shall order the same and direct that no building permits be issued within the affected area. The council's order shall fix a time within which the city ~~administrator~~ manager shall report back to council with his recommendations relating to appropriate zoning districts for the affected area. The said time limitation shall be a reasonable one, predicated upon the time needed for a comprehensive analysis of the area. The initial council moratorium shall be for a period not to exceed one hundred twenty (120) days. The council on its own motion or otherwise may continue any moratorium for a longer period of time, if reasonably necessary. This provision is supplemental to subsection ~~(g)~~ (G) hereof.

~~(g)~~ G. Should the city ~~administrator~~ manager be unable to report back to the council within the time prescribed by its moratorium order, upon timely request by the city ~~administrator~~ manager and after public hearing on the need therefor, the council may reasonably extend the time limitation. The city ~~administrator~~ manager shall submit his report, simultaneously to the city council and the zoning and planning board. The zoning and planning board shall make its findings and recommendations after public hearing to the city council.

~~(h)~~ H. Upon the submission of the zoning and planning board findings and recommendations to the city council the city clerk shall ~~call a public hearing thereon before the city council at the earliest practicable time, not to (10) days after publication, once in a newspaper of general circulation in the City of Miami Springs.~~ follow all

public hearings as required in Sec. 1.04(3)(a), (b) and (c) of the City Charter. After said public hearing, the council shall make its determination as to whether the zoning district shall remain the same or shall be changed. Should the council determine that the zoning districts shall remain the same, it shall immediately issue its order terminating the building moratorium. Should the council determine that the applicable zoning districts should be changed, or new districts created therefor, or special exceptions, variances, conditional use permits and the like, altered or revoked, it shall issue its order continuing the building moratorium and shall immediately take the actions required to accomplish the same.

~~(i)~~I. Upon the completion of all zoning districts changes relating to the affected area, the city council shall issue its order terminating the building moratorium.

~~(j)~~J. If any planning study performed by city officials or employees or a specially hired or appointed city agency, indicated the necessity for zoning changes, the provisions of sections 25-37 through 25-40, Code of the City of Miami Springs, may be utilized to restrict the issuance of building permits until such changes have been finally considered by the city council.

Sec. 61: That Section 25-38 of the Code of Ordinances be and the same is amended as follows:

Sec. 25-38. Other building moratoria.

~~(a)~~A. Should any person make written application to the city ~~administrator~~ manager for the issuance of an administrative order provided by section 25-37~~(a)~~(A), Code of the City of Miami Springs, and the city ~~administrator~~ manager refuses to issue such order, or fails to take action thereon within fifteen (15) days, such person may make written application to the city council for the issuance of a building moratorium by the council. Such application to the council shall be filed with the city clerk, whose duty it shall be to place the matter before the city council as soon as is reasonably practicable for the council's determination as to whether a public hearing shall be called thereon. The city ~~administrator~~ manager shall be notified by the clerk of the date that the matter is to be considered by the council. The word "person" as used in this subsection includes, but is not limited to any individual, firm, corporation, and governmental entity.

~~(b)~~B. Should the council determine that a public hearing should be held as to whether a building moratorium is appropriate, it shall

call the same ~~for the earliest practicable date and give ten (10) days notice thereof by publication once in a newspaper of general circulation in the City of Miami Springs. Pending the public hearing, the council may issue an order prohibiting the issuance of building permits in the affected area~~ as called for in Sec. 1.04(3)(a), (b) and (c) of the City Charter.

~~(c)~~C. The procedure to be followed for this section, after the completion of the steps provided in subsection ~~(a)~~(A) and ~~(b)~~(B) above, is that set forth in section 25-37, ~~(c)~~(E) through ~~(i)~~(I) Code of the City of Miami Springs.

Sec. 62: That all sections of Chapter 25 of the Code of Ordinances not otherwise amended or repealed by this ordinance be and the same are hereby reenacted and included in the provisions of the Zoning Ordinance of the City of Miami Springs.

Sec. 63: That all ordinances or parts of ordinances in conflict with the provisions of this ordinance be and the same are hereby repealed insofar as they are in conflict.

Sec. 64: That the provisions of this ordinance are severable, and if any of the provisions of this ordinance shall be held to be unconstitutional by any court of competent jurisdiction the decision of such court shall not affect or impair in any way any of the remaining provisions of this ordinance.

Sec. 65: That the provisions of this ordinance shall become effective immediately upon adoption.

PASSED AND ADOPTED by the City Council of the City of Miami Springs, Florida this 28th day of March, 1977.

The motion to adopt the foregoing ordinance was offered by (1st reading - Councilwoman Grasso), (2nd reading - Councilwoman Grasso, seconded by (1st reading - Councilman Norton), (2nd reading - Vice Mayor Fields, and the following roll call vote ensued:

	1st reading	2nd reading
Vice Mayor Fields	"no"	"aye"
Councilwoman Grasso	"aye"	"aye"
Councilman Norton	"aye"	"aye"
Councilman Rindone	"aye"	"aye"
Mayor Freeman	"no"	"no"

Don Freeman
Mayor

ATTEST:

Marge Sanders
City Clerk

APPROVED AS TO FORM AND LEGAL SUFFICIENCY:

City Attorney

1st reading: 3/15/77
2nd reading: 3/28/77

1/ Words stricken through shall be deleted. Underscored words constitute the amendment proposed. All other provisions are not in effect and shall remain unchanged.

ORDINANCE NO. 287

AN ORDINANCE AMENDING CHAPTER 25 OF THE CODE OF ORDINANCES OF THE CITY OF MIAMI SPRINGS, BY ADDING SECTION 25-12.1 THERETO.

BE IT ORDAINED BY THE CITY OF MIAMI SPRINGS:

Section 1. That Chapter 25 of the Code of Ordinances of the City of Miami Springs be and the same is hereby amended by adding Section 25-12.1 so that the same shall read as follows:

Section 25-12.1 PLATS AND PLATTING - EXCEPTIONS:

Whenever land is subdivided within the City of Miami Springs, a plat must be recorded. A subdivision plat must first have been approved by the City Council and filed of record in accordance with the platting law, except that the filing and recording of the plat will not be required if:

1. The subdivision involved consists only of the dedication of a road, highway, street, alley or easement and due to unusual conditions and circumstances, the Director of the Building and Zoning Department finds that it is not necessary that a plat be recorded. In lieu of the recording of a plat, the dedication may be required by deed acceptable to compliance with such conditions as may be deemed appropriate under the particular circumstances, such as improvements of sidewalks, streets, drainage facilities, alleys, watermains, fire-hydrants and street lighting and the acceptance of the improvement and dedications by the City of Miami Springs.

2. The land to be subdivided is to be divided into no more than two parcels and because of

(a) Unusual conditions created by owner or development of adjacent lands or

(b) The isolation or remoteness of the land concerned in relation to other plat or improved lands or

(c) Improvements and dedications existing on the land substantially in accordance with the requirements of this Chapter, it is determined by the Director of the Building and Zoning Department that waiving of the requirements for platting would not conflict with the purpose and intent of this Chapter.

In lieu of platting, the Director of the Building and Zoning Department may require any dedications, reservations or improvements required in connection with platting under this Chapter, including the posting of a surety bond as may be necessary to carry out the intent and purpose of this Chapter.

3. The subdivision of land heretofore platted is of such unusual size or shape, or is surrounded by such development or unusual conditions as may be determined by the Director of the Building and Zoning Department, to justify the waiving of the requirements for recording a plat. In lieu of recording of a plat, such conditions may be imposed as may be deemed necessary and appropriate to preserve the public interest.

Section 2: In all other respects, said Code of Ordinances of the City of Miami Springs is unaffected by this Ordinance.

Section 3: This Ordinance shall be incorporated in the Code of Ordinances of the City of Miami Springs, Florida, and shall become effective immediately upon its passage.

PASSED AND ADOPTED this 9 th day of December, A.D. 1963.

Mayor

ATTEST:

City Clerk

First Reading, November 25, 1963

Second Reading, December 9, 1963

ORDINANCE NO. 750-89

ORDINANCE AMENDING SECTIONS 150.019 AND 150.020, SUBDIVISIONS, PLAT, APPROVAL; PLAT, REPLAT, AND WAIVER OF PLAT PROCEDURE; RPOHIBITING ISSUANCE OF BUILDING PERMITS, OCCUPATIONAL LICENSES, OR OTHER LICENSES OR PERMITS ON ANY UNPLATTED LOT; PERMITTING ONE BUILDING PERMIT PER PLATTED LOT; PLATTING REQUIREMENTS; APPLICATION; CONDITIONS; APPEAL; REPEALING ALL ORDINANCES IN CONFLICT; EFFECTIVE DATE.

WHEREAS, it is unlawful to subdivide any property within the City or to erect, construct, or cause to be constructed any residence or any other structure on unplatted land until a plat of the proposed subdivision has been approved by the City Council; and,

WHEREAS, the City Council finds that it is necessary and proper to protect the public health, safety, and welfare to prevent any building permit, occupational license, license or permit to be issued for any structure or business on an unplatted lot within the City of Miami Springs unless the recording of the plat is waived; and,

WHEREAS, the City Council further finds that for all initial construction on any properly platted or waived parcel only one building permit, occupational license, license or permit should be issued to any owner or developer of a single platted lot or parcel of land in order to provide for the orderly development of property and to reduce the impact upon water and sewer services, roads, and other governmental infrastructure; and,

WHEREAS, the procedure for the filing of plats, replats and petitions for waiver of plat should be simplified and the costs associated with such procedures should be assessed against the applicant specially benefited thereby; and,

WHEREAS, the City Council finds that it is reasonable and proper to set minimum application fees for the processing of each application for a plat, replat, or waiver of plat by City Resolution. In addition, the City Council has determined that it is appropriate for each applicant to reimburse the City for all

the engineering, legal, and other technical support costs the City incurs in the processing of each application for plat, replat, or waiver of plat;

NOW, THEREFORE, BE IT ORDAINED BY THE CITY COUNCIL OF THE CITY OF MIAMI SPRINGS, FLORIDA.

SECTION 1. That the Code of Ordinances be and it is hereby amended as follows:

§ 150.019 SUBDIVISIONS; PLAT; APPROVAL.

(A) It shall be unlawful to subdivide any property within the city, or to open, grade, or improve any street therein, or to erect, construct, or cause to be constructed any residence or other structure on any unplatted land, until a plat of the proposed subdivision shall have been approved by the City Council.

~~(B) No plat or replat shall be approved until the following requirements have been met:~~

(B) Subdivsion shall be defined as a division of a lot, tract or parcel of land or water into two or more lots, plats, sites or other subdivisions of land or water for the purpose, whether immediate or future, of sale, rent, lease, building development, anchorage, right-of-way dedication or other use.

(C) No building permit, occupational license, license or permit shall be issued for any improvement, construction or use of an unplatted lot within the City of Miami Springs unless the recording of a plat is not required by state statute, County Ordinance or regulatory rule, or is otherwise waived or excepted by this Code of Ordinances. The owner or developer of any properly platted or waived parcel shall be entitled to only one building permit, occupational license, license or permit for all initial construction on each single platted lot or parcel of land.

(D) No plat or replat shall be approved until the following requirements have been met:

(1) Tentative plat. A tentative plat to be approved by the zoning and planning board showing all lots, streets, and alleys, if required, together with their dimensions, as well as connecting adjoining streets and the elevation of the land in the subdivision to be expressed in feet above mean sea level (United States Coast and Geodetic Survey datum). The elevations may be shown as contours at one-foot intervals.

(2) Final plat. The final plat shall show, wherever required, the limits of areas thereof to be filled, together with the elevation of such fills. The elevation of fills, wherever required, shall be as established by the Dade County engineer's office, and as shown on the current official map of the city, ~~dated September 7, 1970, and~~ on file in the office of the city clerk, the map being made, by reference, a part of this chapter.

(3) Agreement; bond. All persons, firms, and corporations submitting plats to the City ~~Council~~ for approval shall accompany the plat with an agreement providing for the paving of streets, the construction of sidewalks and drainage structures, and the installation of adequate water mains, fire hydrants, street lighting, and other improvements as the City ~~council~~ deems necessary in the subdivision, which installation shall be in accordance with the specifications as

set forth by the city ~~council~~. The agreement shall be accompanied by a surety bond in the penal sum of not less than ~~110%~~125% of the estimated cost of construction. The agreement shall be approved by city council and filed with the city clerk. The condition of this bond shall be such that the principal shall fully and faithfully perform all the terms and conditions of the principal's agreement, and within the time specified therein. The bond shall be released by the city only upon satisfactory completion of the work specified in the agreement as evidenced by written certification by the city engineer, including certification that the elevations of all pavements, sidewalks, and fills comply with the provisions of the chapter. The agreement shall stipulate such time limits as the city ~~council~~ shall require for the various installations specified therein.

(4) Alleys. If appropriate to the parcel being platted or replatted, and required by the City Building and Zoning Department or other appropriate administrative staff, ~~Any~~ a plat or replat shall include properly dedicated alleys in the rear of the lots shown on the plat or replat, which alleys shall not be less than 16 feet in width, and in the alleys there shall be provided returns having 25-foot radii to permit free ingress and egress where they alleys intersect other alleys, to permit vehicles to pass in and out without encroaching on adjoining property.

(5) Lot sizes. All building sites and lots in residential districts shall have a minimum width of 75 feet and a minimum depth of 100 feet, and all building sites or lots in commercial or business districts shall have a minimum width of ~~25~~ 50 feet and a minimum depth of 100 feet. The purpose and intent of this division is to prevent the reduction in size of lots and tracts, or parcels of land from being redivided to parcels of less than the minimum required herein. It is not intended to prevent lots in existence at the time of passage of this chapter from being increased in size or width even though the increase does not reach the prescribed minimum. (62 Code, §25-12) (Ord. 184, passed 2-8-54; amend. Ord. 184.9, passed 3-28-55; amend Ord. 599-77, passed 3-28-77)

(6) Compliance. The granting of a plat or replat is specifically conditioned upon the applicant's satisfactory compliance with all appropriate provisions of Code of Ordinance Section 150.020.

(E) Waiver of Plat. All waivers of plat shall meet the requirements of Code of Ordinance Section 150.020.

§ 150.020 ~~PLATS AND PLATTING; EXCEPTIONS.~~ -- PLAT, REPLAT AND WAIVER OF PLAT PROCEDURE.

(A) All plats, replats or petitions for waiver of plat shall comply with the following requirements:

(1) The provisions of the Dade County Code of Ordinances Chapter 28.

(2) All applications for platting, replatting or waiver of platting shall be submitted to the City Manager and the Building Official of the City of Miami Springs on such forms and with such attachments, exhibits and information as is required by the Code of Ordinances of Dade County, the City of Miami Springs or by the City Manager's Administrative Order for review and submission to the City Zoning and Planning Board. Prior to submission to the City Zoning and Planning Board for review and recommendation, the City Manager and the Building Official shall determine if:

(a) the proposed plat, replat or waiver of plat conflicts in any respect with the City of Miami Springs Code of Ordinances or the City Comprehensive Plan.

(b) all documents required by law including a current survey are attached to the application.

(c) the proposed legal description of each lot, location of property lines, existing or proposed easements, structures, elevations, water and sewer and other utilities and other essential features are correctly set forth.

(d) the public health, safety, and welfare is served by the proposed design of the lots described in the plat, replat, or waiver of plat.

(e) adequate utilities and services are proposed or available;

(f) there are adequate provisions for the safety and convenience of vehicular and pedestrian travel;

(g) a waiver of plat application will meet the requirements of this code;

(h) additional improvements for the protection of the environment are necessary;

(i) the completion or performance bond is adequate to complete required improvements.

(j) resurveying by a surveyor retained by the City, is required;

(k) dedications or reservations are required;

(3) The application shall be accompanied by:

(a) a minimum application fee that shall be established by City Resolution and paid to the City of Miami Springs to defray the initial costs the City will incur in processing each application for plat, replat, waiver of plat, and to investigate all applicant representations prior to final approval.
In addition, an agreement by the applicant to reimburse the City for all engineering, legal, and other technical support costs incurred by the City in the processing of any application. All additional costs shall, within (5) five days after notice, be paid to the City, and in all cases, received prior to submission of the plat, replat or waiver of plat to Dade County. The applicant shall also be responsible to pay all charges or fees that may be assessed by Dade County.

(b) a completion or performance bond and agreement as required by Code Section 150.019 (C)(3) and Code Section 150.020 (A)(2)(i)

(4) All streets, easements, alleys, right of ways, public lands, water and sewer or other public facilities shall be dedicated by appropriate recordable instrument accompanied by an appropriate opinion of title from a Title Company or the applicant's attorney.

(5) A lot, tract, or parcel of land sought to be subdivided by waiver of plat shall be divided into no more than 2 lots if it is determined by the City Council that waiving of the requirements for platting would not conflict with the purpose and intent of this chapter. In addition, the Council shall determine if:

(i) The subdivision of land heretofore platted is of such unusual size or shape or is surrounded by such development or unusual conditions as may justify the waiving of the requirements for recording a plat. In lieu of recording a plat, conditions may be imposed as may be deemed necessary and appropriate to preserve the public interest, including recording of the waiver of plat agreement and survey.

(ii) In lieu of platting, the City Council may require any dedications, reservations, or improvements required in connection with platting under this chapter, including the posting of a surety bond as may be necessary to carry out the intent and purpose of this chapter.

(6) Following review by the City Zoning and Planning Board, all tentative plats, replats and waivers of plat shall be submitted to the City Council for approval.

(7) Upon approval by the the City Council, the applicant shall submit the tentative plat, replat, or waiver of plat to the Plat Division of Metropolitan Dade County for review and approval.

(8) Upon approval of the tentative plat, replat, or waiver of plat from the Plat Division of Metropolitan Dade County, the applicant shall prepare and submit the final plat, replat, or waiver of plat to the City of Miami Springs for final review and approval by the City Council.

(9) After securing final approval from the City of Miami Springs City Council, the applicant shall submit the final plat, replat, or waiver of plat to the Plat Division of Metropolitan Dade County for final County Commission approval.

(10) Upon securing approval from Metropolitan Dade County, the final plat, replat or waiver of plat shall be transmitted to the Clerk of the Circuit Court for recording in the Public Records of Dade County, Florida.

(B) Notwithstanding anything to the contrary contained herein, the City Council may impose any additional reasonable requirements for the protection of the public health, safety, and welfare as a condition for the approval or granting of any plat, replat or waiver of plat.

~~Whenever land is subdivided within the city, a plat must be recorded. A subdivision plat must have been approved by the city council and filed of record in accordance with the platting law, except that the filing and recording of the plat will not be required if:~~

~~(A) The subdivision involved consists only of the dedication of a road, highway, street, alley, or easement, and due to an unusual conditions and circumstances, the director of the building and zoning department finds that it is not necessary that a plat be recorded. In lieu of the recording of a plat, the dedication may be required by deed acceptable to compliance with the conditions as may be deemed appropriate under the particular circumstances, such as improvements of sidewalks, streets, drainage facilities, alleys, water mains, fire hydrants, and street lighting, and the acceptance of the improvement and dedications by the city.~~

~~(B) The land to be subdivided is to be divided into no more than 2 parcels, and because of:~~

~~(1) Unusual conditions created by owner or development of adjacent lands, or~~

~~(2) The isolation or remoteness of the land concerned in relation to other plats or improved lands, or~~

~~(3) Improvements and dedications existing on the land substantially in accordance with the requirements for platting would not conflict with the purpose and intent of this chapter.~~

~~(C) The subdivision of land hereto fore platted is of such unusual size or shape, or is surrounded by such development or unusual conditions as may be determined by the director of the building and zoning department, to justify the waiving of the requirements for recording a plat. In lieu of recording a plat, conditions may be imposed as may be deemed necessary and appropriate to preserve the public interest.~~

~~(D) In lieu of platting, the director of the building and zoning department may require any dedications, reservations, or improvements required in connection with platting under this chapter, including the posting of a surety bond as may be necessary to carry out the intent and purpose of this chapter. (62 Code, §25-12.1) (Ord. 287, passed 12-9-63)~~

SECTION 2. That all Ordinances or parts of Ordinances in conflict herewith are repealed insofar as they are in conflict.

SECTION 3. That is any word, clause, phrase, sentence, paragraph or section of this ordinance is held to be invalid by a court of competent jurisdiction, such declaration of invalidity shall not affect any other word, clause, phrase, sentence, paragraph or section of this ordinance.

SECTION 4. That provisions of this ordinance shall become effective immediately upon adoption.

PASSED AND ADOPTED by the City Council of the City of Miami Springs, Florida this 23 day of October, 1989.

The motion to adopt the foregoing ordinance was offered on second reading by:

Councilmember Grace

seconded by:

Councilmember Hutchings

and on roll call the following vote ensued:

Vice Mayor Ward	"absent"
Councilmember Borgmann	"aye"
Councilmember Grace	"aye"
Councilmember Hutchings	"aye"
Mayor Dewhurst	"aye"

C.R. Dewhurst
MAYOR

ATTEST:

Patricia A. Cochran, CMC
Deputy City Clerk

APPROVED AS TO LEGALITY AND FORM

ALBERT L. WEINTRAUB
CITY ATTORNEY

Words stricken through shall be deleted. Underscored words constitute the amendment proposed. Words remaining are now in effect and remain unchanged.

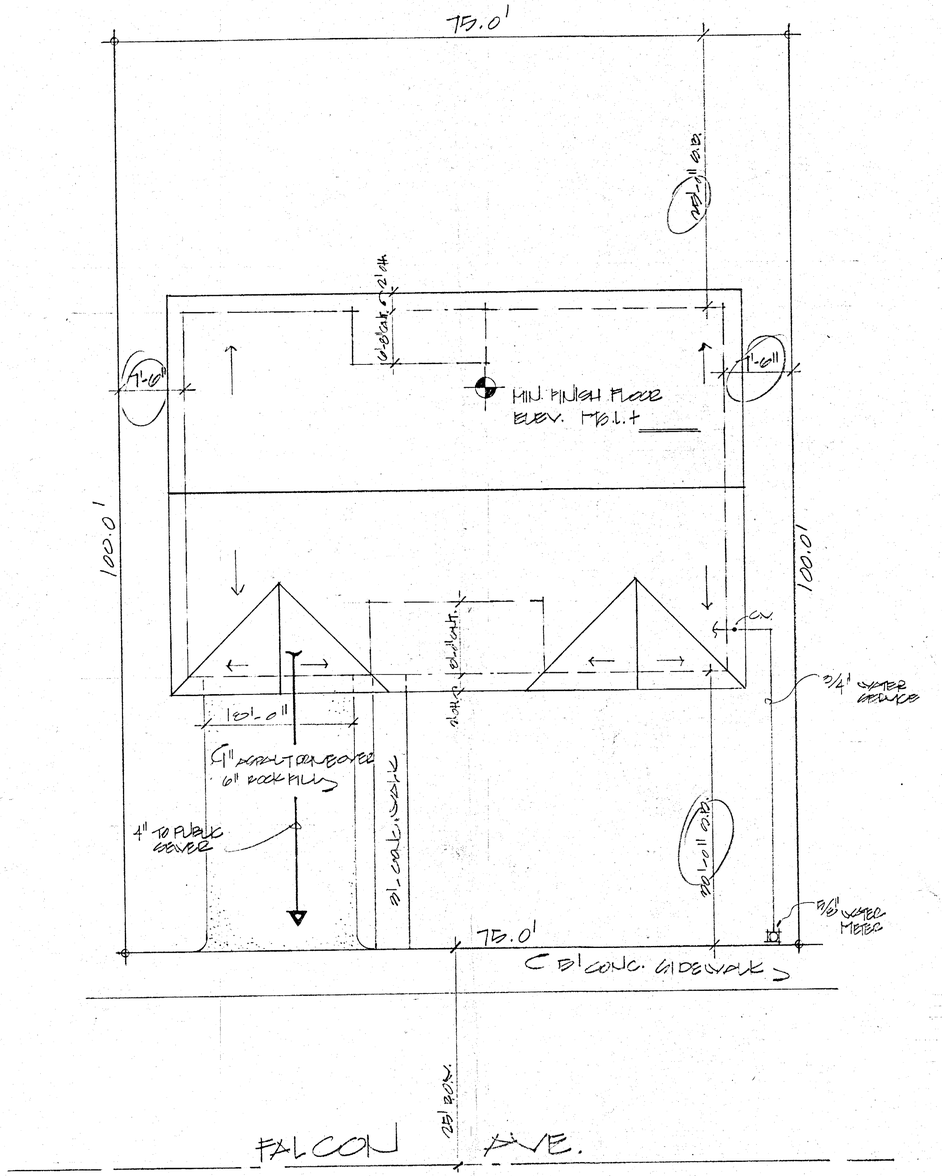

SITE PLAN sc. 1/8"-1'-0"



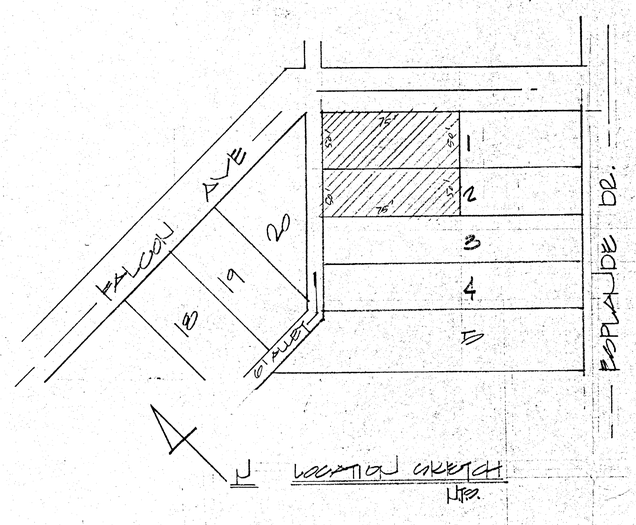

LOCATION SKETCH
N.T.S.

LEGAL DESCRIPTION
THE N.E. 1/2 OF LOTS 1 & 2
BLOCK 58
CINEMA PARK ADDITION TO
COUNTRY CLUB ESTATES
P.B. 17, PAGE 2
DADE COUNTY FL.

LOT AREA → 7,500 sq. FT.
BLDG. AREA → 2,457 sq. FT.
LOT COVERAGE → 32.76%

FIRST PAGE

CITY OF MIAMI SPRINGS, FLA.
APPROVED
BUILDING INSPECTOR
PLUMBING INSPECTOR
ELECTRICAL INSPECTOR
FIRE INSPECTOR
PUBLIC WORKS

These drawings and copies thereof furnished by the architect are his property they are not to be used on other work and are to be returned upon demand at the completion of work. If this drawing or any part thereof is used in any manner without the consent of the architect the user thereof becomes indebted to the architect for full commission.

ENG.

jorge e. trilles, architect
miami, florida
300 Falcon
1450 coral way, suite 6, /miami, fl. 33145 (305) 856-4972

DATE

JOB NO

SHEET 1 OF 5

PERMIT # M-28-85

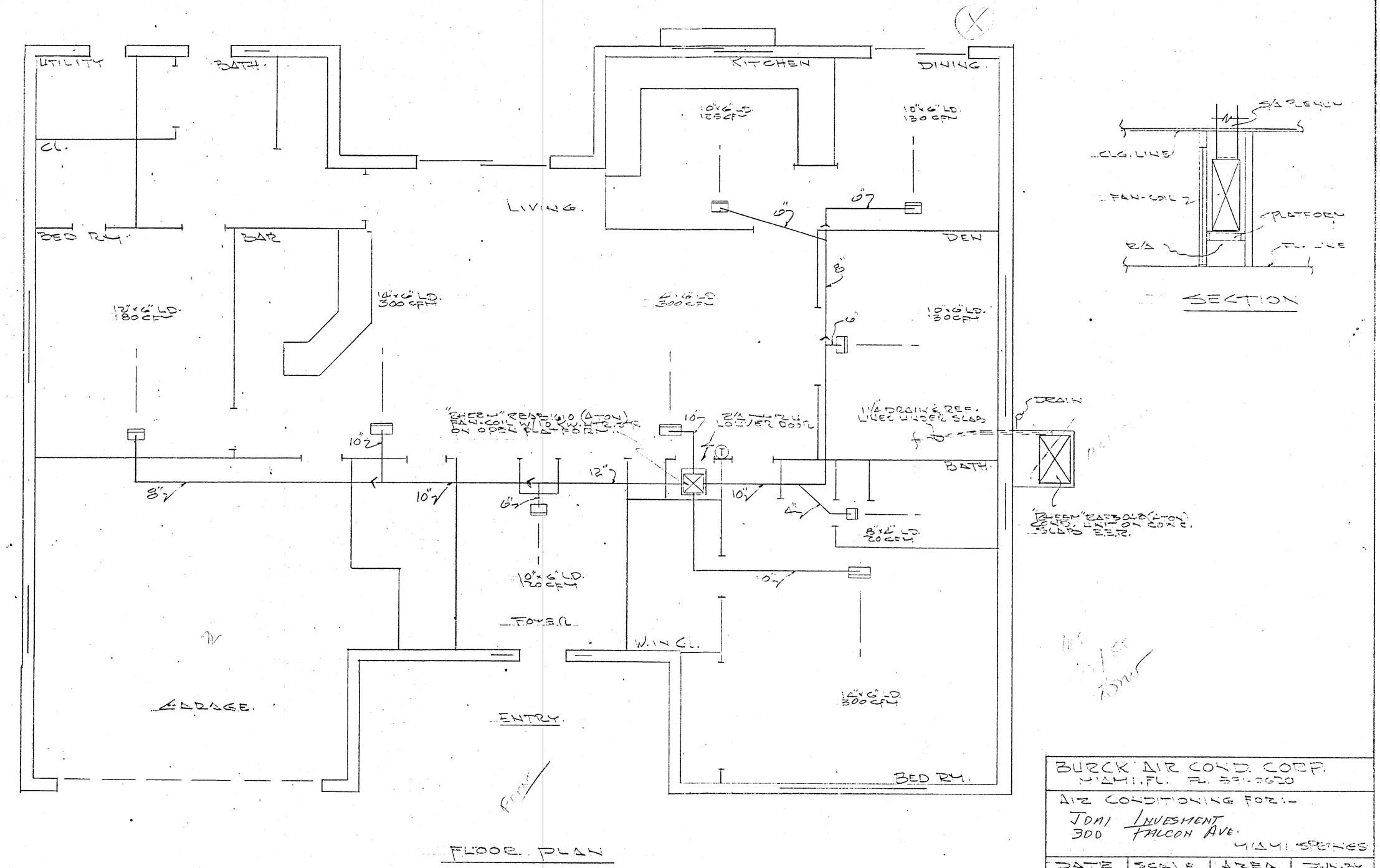

FLOOR PLAN

BURCK AIR COND. CORP. MIAMI, FL. PH. 591-0620			
AIR CONDITIONING FOR:- JOAI INVESMENT 300 FALCON AVE. MIAMI SPRINGS			
DATE	SCALE	AREA	DWN. BY
3-11-85	1/4" = 1'-0"	1870 #	A.C.

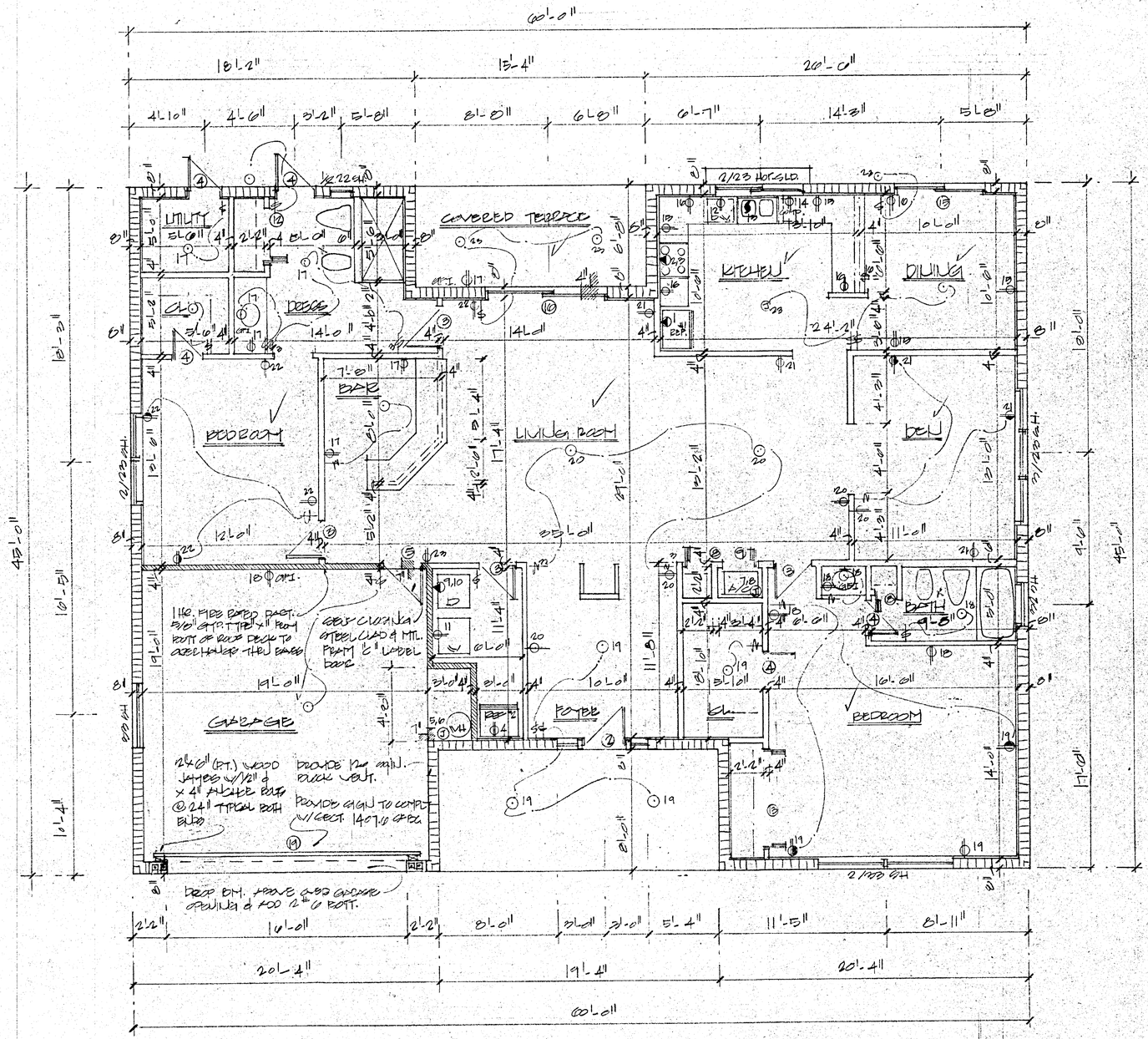

FLOOR PLAN SC. 1/4" = 1'-0"

ms
1/2/85

CITY OF MIAMI SPRINGS, FLA.
APPROVED
BUILDING INSPECTOR
PLUMBING INSPECTOR
ELECTRICAL INSPECTOR
FIRE INSPECTOR
PUBLIC WORKS

1/11/85

These drawings and copies thereof furnished by the architect are his property they are not to be used on other work and are to be returned upon demand at the completion of work. If this drawing or any part thereof is used in any manner without the consent of the architect the user thereof becomes indepted to the architect for full commission.

ENG.

jorge e. trilles, architect
miami, florida
1450 coral way, suite 6, /miami, fl. 33145 (305) 856-4972

DATE

JOB NO

SHEET 2 OF 5

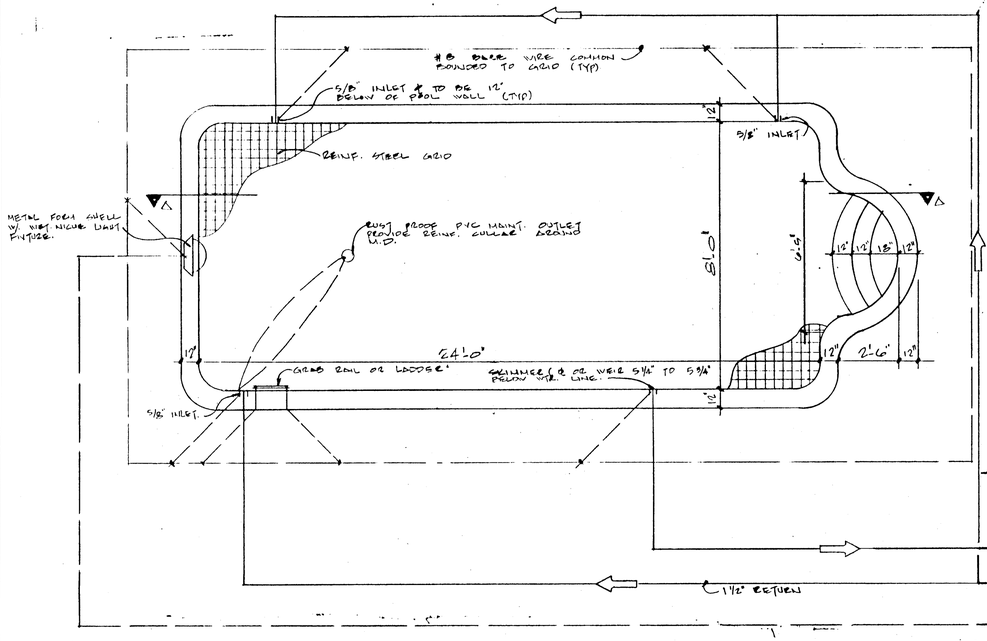

ELECTRICAL & PLUMBING PLAN 1/4" = 1'-0"

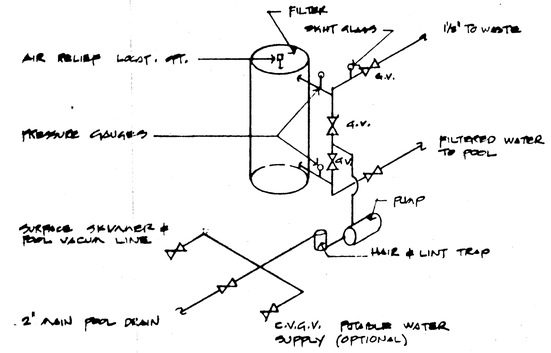

PIPING DIAGRAM N.T.S.

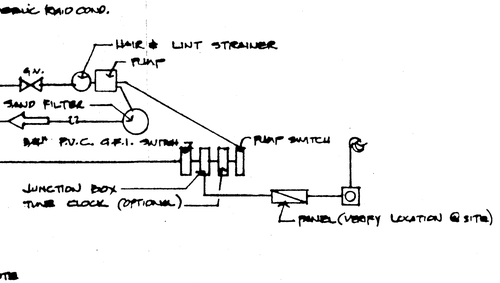

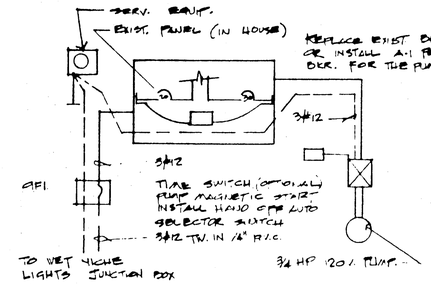

ELECTRICAL SCHEDULE				
ITEMS	VOLTS	WIRE	CIRC. BKR.	AMPS
3/4HP PUMP	120	12	30 1 POLE	14
4 LIGHT 150W.	12 V.	12	20 1 POLE	3
			TOTAL	17

POWER & LIGHT RISER DIAGRAM N.T.S.

LAST PAGE

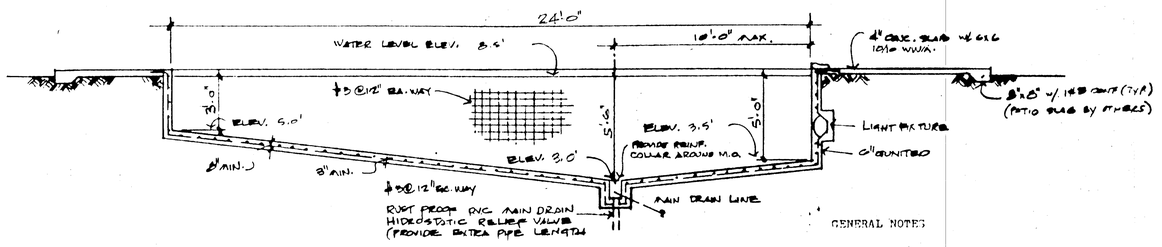

SECTION A - A 1/4" = 1'-0"

POOL DATA	
POOL CAPACITY	6050 GAL
SAND FILTER TANK	22"
FILTER FLOW RATE	45 GPM
FILTER AREA	2.7 S.F.
BACK WASH RATE	45.6 PM
TURN OVER RATE	5.6 H
PUMP SIZE	3/4 HP

FLOTATION ANALYSIS	
WATER LEVEL ELEV.	8.5'
POOL DEPTH	5.6'
LOW POINT POOL ELEV.	2.9'
FLOOD CRITERIA	7.6'
TOTAL HEAD	5.1'
LESS HYDRO VERT.	1.6'
HIDROSTATIC UP-LIFT	3.5'
MIN. FLOOR SLAB THICKNESS	8"

GENERAL NOTES

1. All work shall comply S.F.B.C. and N.E.C. and other applicable and local codes.
2. Visual inspection of soil condition at the job site indicates p.s.f. bearing value. Any other condition founded shall be called to the attention of the Engineer for proper correction.
3. Swimming pool shall bear on rock or undisturbed sand and all walls and floor shall be gunited, packed or poured w/concrete with a compressive strength of 3,000 psi min., at 28 days.
4. All reinf. steel shall be intermediate grade steel in conformance w/A.S.T.M. A-305, steel shall be bent, spliced and placed in accordance w/A.C.I. standards and specifications.
5. All piping shall be P.V.C. schd. 40 and bear the N.S.F. of approval.
6. Disposal of backwash pool water shall conform w/ chapter 50, sect.5004 of the S.F.B.C. surface grading shall confine ponding of pool water to within lot lines and such ponding shall not persist for more then one hour after discharge.
7. Grate at main drain shall have a free area four times the area of the section line.
8. Water supply and disposal shall be installed in a way so that there is no gross connection w/ a domestic water supply or water disposal system.
9. Hair and lint strainer shall have removal screen w/ a free area not less then 5 times the area of suction line.
10. Cartridge filter, if used, shall have a filtration rate not to exceed 3 G.P.M. per. sf. of filter area no backwash required.
11. All metallic components, fixture and equipments, such as conduits, piping, systems, reinf. steel, lighting fixtures and fixture housings, metal parts of ladders diving boards and supports, shall be bonded together and grounded to a common ground, the bonding conductor shall not be smaller than #8 copper.
12. No overhead wiring over open pool.

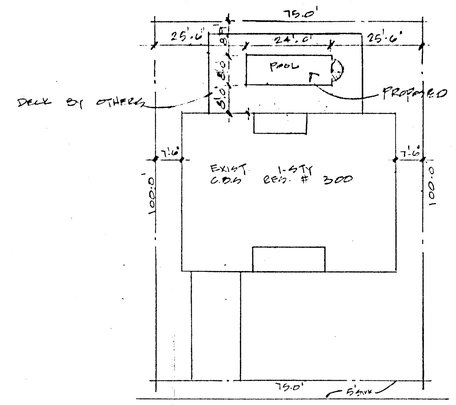

FALCON AVE

SITE PLAN 1" = 20'-0"

LEGAL DESCRIPTION

THE NORTHWESTERLY 1/2 OF LOTS 1 & 2 BLOCK 68, "COUNTRY CLUB ESTATES" PB. 17 - PG 2 DADE COUNTY, FLORIDA.

LAST PAGE

MS 3/28/85 DWS

REVISIONS	BY

design services associates
• phone: 634-8294 • p.o. box 52 riverside station miami, florida 33135

PROPOSED POOL FOR:
MR. JOSE SANTAN
DADE COUNTY, FLORIDA.

Date	3-2-85
Scale	1/4 = 1'-0"
Drawn	TO
Job	85014
Sheet	1
Of	1 Sheets

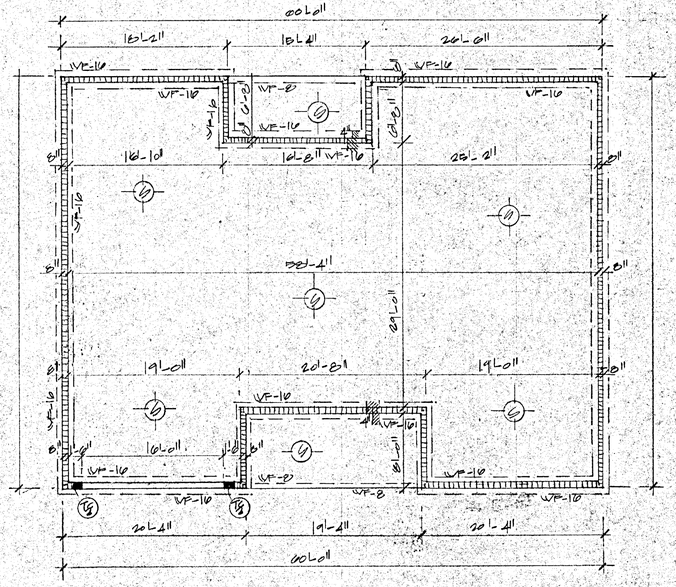

FOUNDATION PLAN 1/8"=1'-0"

FOUNDATION LEGEND

(S) — 4" CONC. SLAB ON WELL COMPACTED AND CLEAN FILL W/ 6'X6' 10/10 WIRE REINFORCEMENT

WF-16 — 10"x16" CONC. FOOTING W/ 2#5 CONT.

WF-8 — THICKENED EDGE SLAB AND PROVIDE 1#5 CONT.

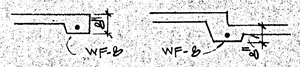

F-2 — 2'-0"X 2'-0"X 12" CONC. FOOTING W/ 3 #5 BOTT EACH WAY

F-3 — 3'-0"X 3'-0"X 12" CONC. FOOTING W/ 4 #5 BOTT. EACH WAY

F-4 — 4'-0"X 3'-0"X 12" CONC. FOOTING W/ 5 #5 BOTT EACH WAY

4"X 4"X 3/16" STEEL COLUMN FILLED W/ CONC. PROVIDE 1/4" PRESSURE RELIEF HOLES @ BOTTOM & MID-SPAN

(To) — 8"X 12" CONC. TIE COLUMN W/ 4 #5 VERT. & #2 TIES @ 12" OC ALL THRU.

(Tc) — PROVIDE 1 #5 VERT. THRU CONC. FILLED BLOCK CELL TIED TO FOOTING & T.B. ABOVE

(Tc/2) — PROVIDE 2 #5 VERT. THRU EACH OF TWO BLOCK CELLS TIED TO FOOTING & T.B. ABOVE

SOIL INSPECTION

BY VISUAL INSPECTION OF SITE SOIL IS TO BE CLEAN SAND & ROCK WITH A MINIMUM SOIL BEARING CAPACITY OF 2,500 P.S.I. IF CONDITIONS VARY ARCHITECT SHALL BE NOTIFIED

NOTE: ALL CONC FOR SLABS ON GRADE & FOOTINGS TO BE 2,500 PSI. FOR COLUMNS & BEAMS TO BE 3,000 PSI.

NEW CBS ACCEPTS FLAT TILE

DOOR SCHEDULE

MARK	WD.	HT.	TH.	MATERIAL	TYPE	FRAME	REMARKS
1	PAIR 2'6"	6'8"	1 3/4"	WOOD	SWING	WOOD	SOLID CORE/PANEL
2	3'0"		"				" " "
3	2'6"		1 3/8"	↓		↓	HOLLOW CORE/ FLUSH
4	2'0"		"				" " "
5	2'6"		—	"C" LABEL	↓	"C" LABEL	MTL. CLAD "C" LABEL SELF CLOSING
6	2'6"		1 3/8"	WOOD	POCKET	WOOD	HOLLOW CORE FLUSH
7	2'0"		"	"	"	"	" " "
8	16'		—	METAL	BI-FOLD	METAL	FULL LOUVERED
9	2'0"		—				
10	2'6"		—				
11	3'0"		—				
12	4'0"		—				
13	6'0"		—				
14	8'0"		—	↓	↓	↓	↓
15	6'0"		—	GLASS	SLIDING	ALUM.	1/4" TEMP. GLASS.
16	8'		—				
17	12'0"	↓	—	↓	↓	↓	↓
18	9'0"	7'0"	—	WOOD	OVERHEAD	METAL	GARAGE DOOR
19	16'0"	7'0"	—	"	"	"	" "

WINDOW AND DOOR SPECIFICATIONS.

CHAPTER 8-C INTRUSION AND BURGLARY SECURITY.-

1- ALL SINGLE EXTERIOR SWING DOORS SHALL HAVE A LOCK TO BE KEY OPERATED FROM EXTERIOR WITH A MINIMUM OF 6,000 POSSIBLE CHANGES OR LOCKING COMBINATIONS; KEY-IN-THE LOCK WITH AN AUXILIARY- SINGLE DEAD BOLT, HARDENED BOLT OR INSERTS.
2- HINGES ON EXTERIOR OUT SWINGING DOORS SHALL HAVE NONEXPOSED SCREWS.
3- JAMBS OF ALL EXTERIOR OFF SET TYPE IN SWINGING DOORS SHALL BE RABBETTED/OR OF SIMILIAR FABRICATION TO PREVENT DEFEATING THE PURPOSE OF THE STRIKE, AND THE INTEGRETY OF LOCKS AND LATCHES.
4- FRONT ENTRANCE DOORS SHALL BE PROVIDED WITH A DOOR SCOPE OR VISION PNL.
5- ALUMINUM WINDOWS SHALL COMPLY WITH THE ARCHITECTURAL ALUMINUM MANUFACTURER'S ASSOCIATION (AAMA) STANDARD FOR FORCE ENTRY RESISTENT ALUMINUM HORIZ. SLIDING WINDOWS AAMA 1302-3-1972 AND THE AMERICAN NATIONAL STANDARD INSTITUE (ANSI) A 134.1-1972
6- SLIDING GLASS DOORS SHALL COMPLY WITH THE ARCHITECTURAL ALUMINUM MANUFACTURER'S ASSOCIATION (AAMA) STANDARD FOR FORCED ENTRY RESISTENT ALUMINUM SLIDING GLASS DOORS (AAMA) 303-3-1972 AND THE AMERICAN NATIONAL STANDARD INSTITUE (ANSI) A 134.2-1972

ELECTRICAL SCHEDULE

CIRC.	USE	VOLTS	TRIP	WIRE	COND.
1	REFRIGERATOR #1	115	20	#12	1/2"
2,3	RANGE	230	50	#6	1"
4	REFRIGERATOR #2				
5,6	WATER HEATER	230	25	#10	1/2"
7,8	A/C	230	40	2#6 1#10	3/4"
9,10	DRYER				
11	WASHER	230	40	2#6 1#10	3/4"
12	DISHWASHER	115	20	#12	1/2"
13	GARBAGE DISP.				
14	TRASH COMP.				
15,16	SMALL APPL.				
17,18	GPI				
19-23	LIGHTS & RECPT.				
24,25	SPARES.				

LOAD CALCULATION

LIVING AREA = 2449.1 sq.ft. 2449.1 x 8 W./sq.ft.	19,590
2 APPLIANCES CIRCUITS (1500 W. EACH) 2 x 1500 W	3,000
LAUNDRY (WASHER)	1,500
RANGE (N.E.C.)	12,000
DRYER	5,000
WATER HEATER	4,500
REFRIGERATOR #1	1,500
DISHWASHER	1,200
GARBAGE DISP.	1,000
REFRIGERATOR #2	1,500
TRASH COMPACTOR	1,800
	40,090

FIRST 10,000 W @ 100%	10,000
REMAINDER @ 40%	12,012
(1) A/C. (5 KW. STRIP HTR)	5,000
	27,012

TOTAL $\frac{27,012}{230\ V.} = 117.5$ AMPS

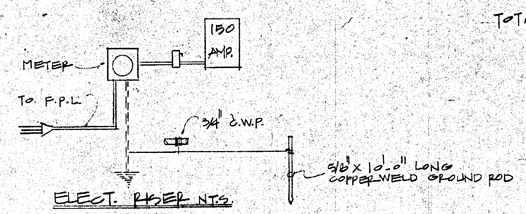

ELECT. RISER N.T.S.

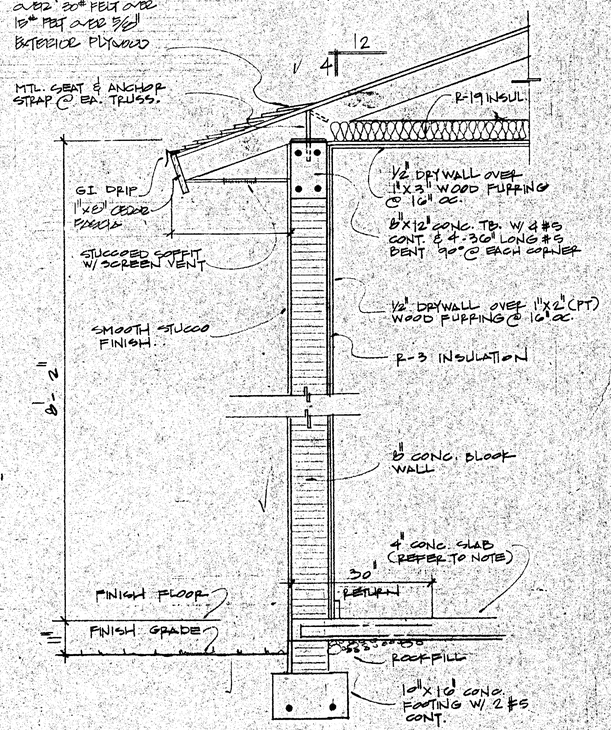

TYPICAL WALL SECTION sc. 3/4"=1'-0"

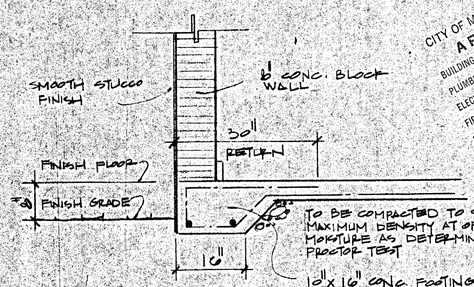

ALTERNATE FOOTING DETAIL sc. 3/4"

1/1/85 BMS

CITY OF MIAMI SPRINGS, FLA.
APPROVED 1/1/85
BUILDING INSPECTOR
PLUMBING INSPECTOR
ELECTRICAL INSPECTOR
FIRE INSPECTOR
PUBLIC WORKS

These drawings and copies thereof furnished by the architect are his property they are not to be used on other work and are to be returned upon demand at the completion of work. If this drawing or any part thereof is used in any manner without the consent of the architect the user thereof becomes liable to the architect for full commission.

ENG.

ARCH

jorge e. trilles architect
miami, florida
1450 coral way, suite 6, miami, fl. 33145 (305) 856-4092

DATE

JOB NO

SHEET 2 OF 5

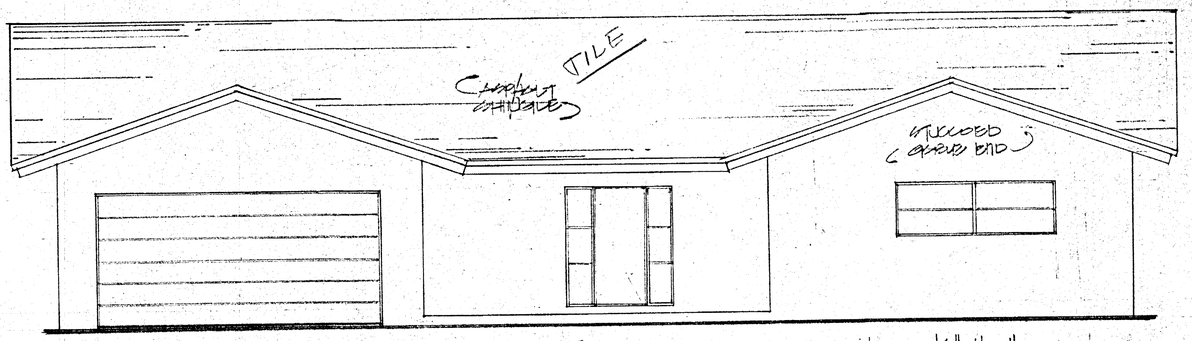

FRONT ELEVATION sc. 1/4" = 1'-0"

NOTE!
STUCCOED GABLE END:
STUCCO OVER METAL LATH
OVER 15# FELT OVER
1/2" EXTERIOR PLYWOOD

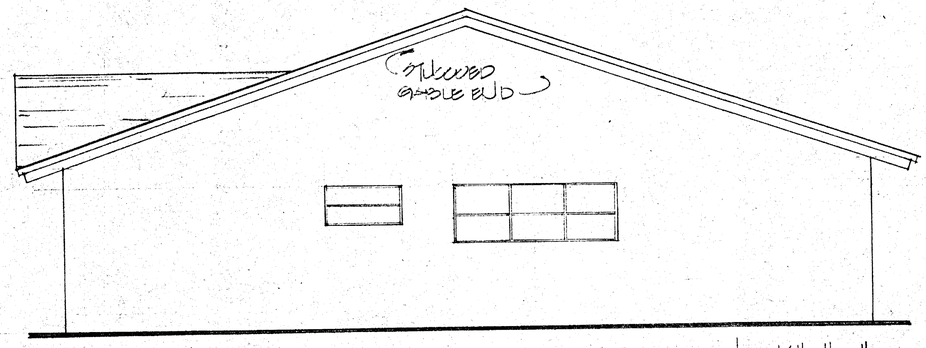

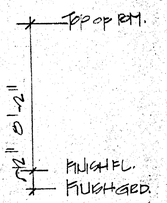

RIGHT ELEVATION sc. 1/4" = 1'-0"

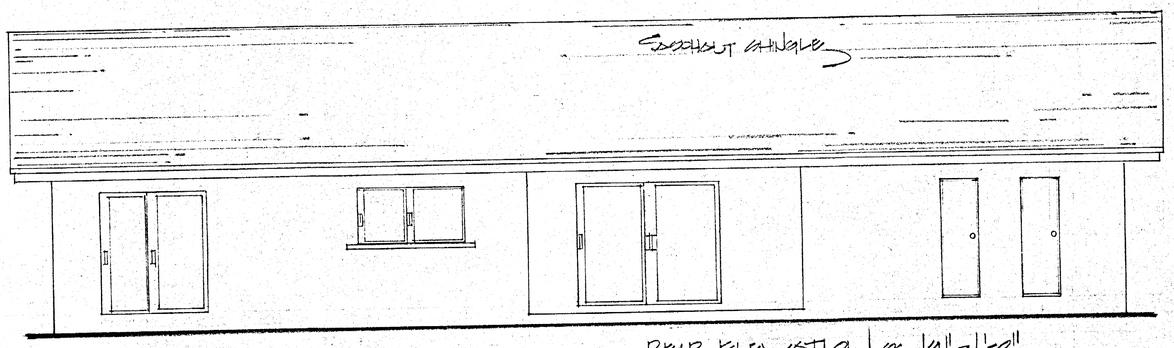

REAR ELEVATION sc. 1/4" = 1'-0"

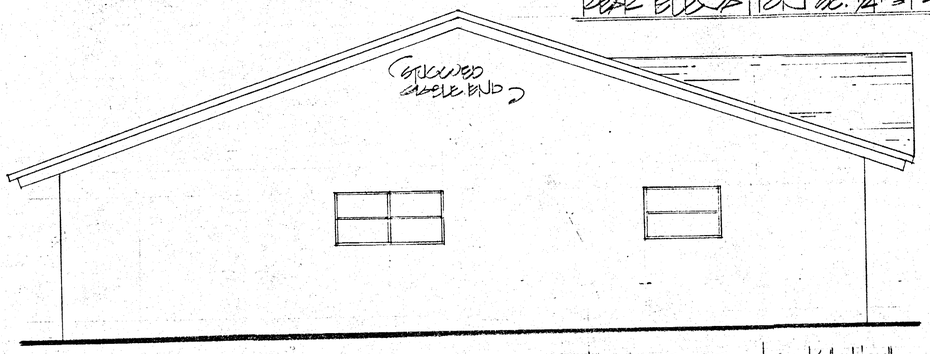

LEFT ELEVATION sc. 1/4" = 1'-0"

MS
1/2/85
DW
1/4/85

CITY OF MIAMI SPRINGS, FLA.
APPROVED
BUILDING INSPECTOR
PLUMBING INSPECTOR
ELECTRICAL INSPECTOR
FIRE INSPECTOR
PUBLIC WORKS

These drawings and copies thereof furnished by the architect are his property they are not to be used on other work and are to be returned upon demand at the completion of work. If this drawing or any part thereof is used in any manner without the consent of the architect the user thereof becomes indepted to the architect for full commission.

ENG.

ARCH.

jorge e. trilles, architect
miami, florida
1450 coral way, suite 6, /miami, fl. 33145 (305) 856-4972

DATE

JOB NO

SHEET 4 OF 5

FLORIDA ENERGY EFFICIENCY CODE
Effective: June 1, 1984 FOR BUILDING CONSTRUCTION Model: ______

FORM 900-A-84 — SECTION 9—RESIDENTIAL POINT SYSTEM METHOD — DEPARTMENT OF COMMUNITY AFFAIRS — CLIMATE ZONES SOUTH 7 8 9

This form may be used to demonstrate compliance with the Energy Code for new single-family detached or multifamily attached dwellings under Section 9 of the Energy Code. An alternative to this method for single-family detached dwellings, and multifamily attached dwellings of three stories or less, is provided in Section 10 of this Code. Only dwellings which are above ground frame (wood siding, brick veneer, etc.) or concrete wall type construction may be calculated using Sections 9 and 10. Other types of construction must comply under Section 4 or Section 5 of this Code. Additions to existing residential buildings shall comply with the requirements of Section 10 of this Code. Detailed information on how to complete this form may be obtained from your local building department or the Department of Community Affairs, Energy Code Program, 2571 Executive Center Circle East, Tallahassee, Florida 32301.

PROJECT NAME AND ADDRESS:	SINGLE FAMILY RESD FOR MR SANTALLA / FALCON AVENUE Miami, Florida	PERMITTING OFFICE:	Dade County
		CIRCLE CLIMATE ZONE:	7 (8) 9
BUILDER:	SAME	PERMIT NO.:	
OWNER:	JOSE SANTALLA	JURISDICTION NO.:	2 3 1 0 0 0

[X] DETACHED [ ] ATTACHED

IF MULTIFAMILY, NO. OF UNITS COVERED BY THIS CALCULATION: ______

SEPARATE CALCULATIONS ARE REQUIRED FOR EACH WORST CASE UNIT TYPE. CHECK IF THIS CALCULATION REPRESENTS A WORST CASE CONDITION. [X]

GLASS AREA AND TYPE	CLEAR	TINT, FILM, SOLAR SCREEN
SGL	2259	
DBL		

NET WALL AREA AND INSULATION				CONDITIONED FLOOR AREA	CEILING INSULATION	
CBS	R=	FRAME	R=		UNDER ATTIC	SGL. ASSEMBLY
1119.7	3.0	225.9	11.0	2197.0	R= 19.0	R=

COOLING SYSTEM	PRIMARY HEATING SYSTEM	PRIMARY HOT WATER SYSTEM
[X] CENTRAL [ ] NONE	[X] ELECTRIC STRIP [ ] GAS [ ] NONE	[X] ELECTRIC RESISTANCE [ ] SOLAR
[ ] ROOM	[ ] OIL [ ] SOLAR	[ ] HEAT RECOVERY [ ] GAS
[ ] PACKAGE TERMINAL AC	[ ] HEAT PUMP: COP =	[ ] DED. HEAT PUMP: COP =
EER/SEER = 8.5	[ ] OTHER:	[ ] OTHER:

CALCULATED E.P.I.: 73.0

CALCULATED E.P.I. MUST NOT EXCEED 100 POINTS

In accordance with Section 553.907 F.S., I hereby certify that the plans and specifications covered by this calculation are in compliance with the Florida Energy Code.

OWNER/AGENT: [signature]

DATE: 8/30/84

Review of the plans and specifications covered by this calculation indicates compliance with the Florida Energy Code. Before construction is completed, this building will be inspected for compliance in accordance with Section 553.908, F.S.

BUILDING OFFICIAL: ______

DATE: ______

9A PRESCRIPTIVE MEASURES (Must be met or exceeded by all residences.)

COMPONENTS	MINIMUM REQUIREMENTS	CHECK TO INDICATE COMPLIANCE
WINDOWS (903.1)	MAXIMUM OF 0.5 CFM per LINEAR FOOT OF OPERABLE SASH CRACK.	✓
DOORS (903.1)	MAXIMUM OF 0.5 CFM PER SQUARE FOOT OF DOOR AREA. INCLUDES SLIDING GLASS DOORS.	✓
EXT. JOINTS & CRACKS (903.1)	TO BE CAULKED, GASKETED, WEATHER-STRIPPED OR OTHERWISE SEALED.	✓
CEILING INSULATION (903.9)	MINIMUM OF R-19.	✓
WATER HEATERS (903.2)	MUST BEAR ASHRAE STANDARD 90-80 LABEL OR A MAX. 4 WATT/SQ. FT. STAND-BY LOSS. SWITCH OR CLEARLY MARKED CIRCUIT BREAKER (ELECTRIC) OR CUT-OFF VALVE (GAS) MUST BE PROVIDED.	✓
SWIMMING POOLS (903.3)	IF HEATED BY OTHER THAN SOLAR, MUST HAVE POOL COVER DESIGNED TO MINIMIZE HEAT LOSS. ALL NON-COMMERCIAL POOLS MUST BE EQUIPPED WITH A POOL PUMP TIMER.	N/A
HOT WATER PIPES (903.4)	INSULATION IS REQUIRED ONLY FOR RECIRCULATING SYSTEMS. IN SUCH CASES, PIPING HEAT LOSS SHALL BE LIMITED TO A MAX. OF 17.5 BTU /H PER LINEAR FOOT OF PIPE (SEE 504.4).	N/A
SHOWER HEADS (903.5)	WATER FLOW MUST BE RESTRICTED TO NO MORE THAN 3 GALLONS PER MINUTE.	✓
HVAC DUCT CONSTRUCTION (903.6)	CONSTRUCTED IN ACCORDANCE WITH INDUSTRY STANDARDS AND LOCAL MECHANICAL CODE. DUCTS IN UNCONDITIONED SPACE MUST BE INSULATED TO A MINIMUM R-4.2.	✓
HVAC CONTROLS (903.7)	A SEPARATE, READILY ACCESSIBLE MANUAL OR AUTOMATIC THERMOSTAT FOR EACH SYSTEM.	✓

FORM 900-A-84 — CLIMATE ZONES 7 8 9

GLASS — DO NOT INCLUDE INTERIOR SHADING

WINTER

OR	AREA	SGL	DBL	WOF (9F)	GROSS WINTER POINTS
N	30	55.4	38.5	1	1994
NE		55.4	38.5		
E	21	55.4	38.5	.86	1286
SE		55.4	38.5		
S	31.5	55.4	38.5	.86	1500
SW		55.4	38.5		
W	58.02	55.4	38.5	1	3214
NW		55.4	38.5		
H		22.6	6.8		
E	21	55.4		.90	1436
W	53.30	55.4		1	2956

H = HORIZONTAL GLASS (SKYLIGHTS).

SUMMER

OR	AREA	SINGLE CLR	SINGLE TINT	DOUBLE CLR	DOUBLE TINT	SOF (9F)	GROSS SUMMER POINTS
N	30	204	176	163	139	1	7344
NE		309	264	258	218		
E	21	425	360	362	304	.95	10,901
SE		418	354	355	298		
S	31.5	348	294	287	242	.92	10,027
SW		418	354	355	298		
W	58.02	425	360	362	304	.95	23,425
NW		309	264	258	218		
H		720	605	627	524		
E	21	425				.69	7918
W	53.38	425				.76	17235

FOR SC OTHER THAN 0.83 SEE SEC. 902.2(a)5. TINT MULT. MAY BE USED FOR GLASS WITH SOLAR SCREENS, FILM, OR TINT.

TOTAL GROSS WINTER POINTS 19701.6 — TOTAL GROSS SUMMER POINTS 101,086.5

DUCT MULT

WINTER				SUMMER			
R = 4.2–4.9	"	1.14	22459.8	R = 4.2–4.9	"	1.14	115238.6
R = 5.0–6.6		1.12		R = 5.0–6.6		1.12	
R = 6.7 & UP		1.09		R = 6.7 & UP		1.09	
DUCTS IN CONDITIONED SPACE		1.00		DUCTS IN CONDITIONED SPACE		1.00	

HSM FROM 9G " × 1.0 " — CSM FROM 9H " × .76 87581.3

DIVIDE BY CONDITIONED FLOOR AREA 22459.8 ÷ 2197 = 10.2 WINTER POINTS — DIVIDE BY CONDITIONED FLOOR AREA 87581.3 ÷ 2197 = 39.8 SUMMER POINTS

CALCULATE ENERGY PERFORMANCE INDEX

WINTER POINTS		SUMMER POINTS		HOT WATER PTS. (9I)		E.P.I. SUBTOTAL		ADJUSTMENT MULTI. (9B)		ADJUSTED E.P.I.		CREDIT PTS. (9C + 9D)		PENALTY PTS. (9E)		CALCULATED E.P.I.
10.2	+	39.8	−		=	50	×	1.4	=	70	−	0	+	3	=	73.0

THE CALCULATED E.P.I. MUST BE EQUAL TO OR LESS THAN 100 POINTS.

9B ADJUSTMENT MULTIPLIERS

CONDITIONED FLOOR AREA (SQ. FT.)	0–900	901–1100	1101–1300	1301–1500	1501–1700	1701–1900	1901–2100	2101–2300	2301–ABOVE
ADJUSTMENT MULTIPLIER	1.03	1.07	1.11	1.16	1.21	1.27	1.33	1.40	1.47

SECTION 9 — WORKSHEET FOR ENERGY CALCULATIONS

Please attach to your submittal.

State of Florida Points Method Energy Calculations.

GLASS AREA (Includes Windows & Sliding Doors.) MODEL: ______

Glass Tint: CLEAR Thickness: 1/4" 1/16 S.C.: —— Single: ✓ Double: ——

ORIENTATION	AREA (sq. ft.)	O.H. (Overhang)	WOF	SOF	REMARKS
N	30	2	1	1	
N					
NE					
NE					
E	21	2	.86	.95	
E	20	8	.90	.69	
SE					
SE					
S	31.5	2	.86	.92	
S					
SW					
SW					
W	58.02	2	1	.95	
W	53.30		1	.76	
NW					
NW					
H					
H					

Total Glass = 225.9 sq. ft.

H: Roof mounted skylights.
WOF & SOF: Winter Overhang Factor & Summer " "

2.- GROSS WALL AREAS = Perimeter x Roof or Ceiling Height

A) Gross CBS wall = 170.66 ft x 8 ft = 1365.3 sq. ft.
B) Gross Frame wall = 30.32 ft x 8 ft = 242.6 sq. ft.
C) Gross ____ wall = ____ ft x ____ ft = ____ sq. ft.

3.- PARTY WALL = (____ x ____) + (____ x ____) = ____ sq. ft.

4.- EXTERIOR (WOOD OR METAL) DOORS.-

Door area in exterior building envelope = ____ + ____ = 20.01 sq. ft.
Door area in walls separating A/C spaces from non A/C spaces = ____ + ____ = 16.67 sq. ft.

5.- NET OPAQUE WALL AREAS = (Gross wall) - (Glass area) - (Door area)

CBS Wall = 1365.3 - 225.9 - 20.01 = 1119.4 sq. ft.
FRAM Wall = 242.6 - 0 - 16.7 = 225.9 sq. ft.
____ Wall = ____ - ____ - ____ = ____ sq. ft.

6.- TOTAL A/C FLOOR AREA = 1st. Floor Air Conditoned Area + 2nd Floor A/C Area + 3rd....
Total A/C Floor Area = ____ + ____ + ____ = 2197 sq. ft.

FORM 900-A-84 — CLIMATE ZONES 7 8 9

9C DESIGN CREDIT POINTS (CP)

CEILING FAN IN COND SPACE (max 5 CP)	1	
MULTIZONE A/C SEPARATED BY DOOR	5	
CROSS VENTILATION (1 CP per room)	1	
WHOLE HOUSE FAN (min. 1.5 cfm/s.f.)	5	
WOOD STOVE	2	
FIREPLACE WITH OUTSIDE COMBUSTION AIR	2	
9C TOTAL (not to exceed 12 points)		

9D HEATING SYSTEM CREDIT POINTS

NATURAL GAS/PROPANE HEATING	8.0
OIL HEATING	6.4

9E DESIGN PENALTY POINTS

WASHER AND DRYER IN COND SPACE	3
TOTAL GLASS OPENS LESS THAN 40%	5
FIREPLACE WITH INSIDE COMBUSTION AIR	5

9F WINTER OVERHANG FACTOR (WOF)

FEET	N	NE	E	SE	S	SW	W	NW
0-0.9	1.00	0.99	0.85	0.75	0.83	0.98	1.00	1.00
1-1.9	1.00	0.99	0.85	0.76	0.84	0.98	1.00	1.00
2-2.9	1.00	0.99	0.86	0.77	0.86	0.99	1.00	1.00
3-3.9	1.00	0.99	0.87	0.80	0.87	0.99	1.00	1.00
4-4.9	1.00	0.99	0.89	0.83	0.90	0.99	1.00	1.00
5-5.9	1.00	0.99	0.91	0.86	0.92	1.00	1.00	1.00
6-6.9	1.00	0.99	0.92	0.90	0.94	1.00	1.00	1.00
7-7.9	1.00	1.00	0.94	0.92	0.96	1.00	1.00	1.00
8-8.9	1.00	1.00	0.96	0.95	0.97	1.00	1.00	1.00
9-9.9	1.00	1.00	0.97	0.97	0.98	1.00	1.00	1.00
10-10.9	1.00	1.00	0.98	0.98	0.99	1.00	1.00	1.00
11-11.9	1.00	1.00	1.00	1.00	1.00	1.00	1.00	1.00
12 UP	1.00	1.00	1.00	1.00	1.00	1.00	1.00	1.00

9F SUMMER OVERHANG FACTOR (SOF)

FEET	N	NE	E	SE	S	SW	W	NW
0-0.9	1.00	1.00	1.00	1.00	1.00	1.00	1.00	1.00
1-1.9	1.00	1.00	0.99	0.99	0.98	0.99	0.99	1.00
2-2.9	1.00	0.98	0.95	0.93	0.92	0.93	0.95	0.98
3-3.9	1.00	0.95	0.89	0.87	0.86	0.87	0.89	0.95
4-4.9	1.00	0.91	0.84	0.81	0.80	0.81	0.84	0.91
5-5.9	0.99	0.88	0.80	0.76	0.76	0.76	0.80	0.88
6-6.9	0.99	0.85	0.76	0.72	0.72	0.72	0.76	0.85
7-7.9	0.99	0.83	0.72	0.68	0.70	0.68	0.72	0.83
8-8.9	0.98	0.81	0.69	0.66	0.68	0.66	0.69	0.81
9-9.9	0.98	0.79	0.67	0.64	0.66	0.64	0.67	0.79
10-10.9	0.98	0.78	0.65	0.62	0.65	0.62	0.65	0.78
11-11.9	0.97	0.76	0.63	0.61	0.65	0.61	0.63	0.76
12 UP	0.97	0.76	0.62	0.59	0.64	0.59	0.62	0.76

9G HEATING SYSTEM MULTIPLIER (HSM)

HEAT PUMP	COP	2.5–2.6	2.7–2.8	2.9–3.0	3.1–3.2	3.3–3.4	3.5 & UP
	HSM	.40	.37	.34	.32	.30	.29
SOLAR HEATING SYSTEM	(BACKUP SYSTEM FRACTION) × (BACKUP SYSTEM HSM)						
ELECTRIC STRIP HEAT	1.0						
NATURAL GAS/PROPANE/OIL	1.0 (SEE TABLE 9D FOR CREDITS)						
PTAC & ROOM HEAT PUMPS	MINIMUM COP 2.2. HSM FOR COP 2.2 – 2.4 = .45. SEE TABLE ABOVE FOR COP > 2.4						

9H COOLING SYSTEM MULTIPLIER (CSM)

ELECTRIC	EER/SEER	7.8–7.9	8.0–8.4	8.5–8.9	9.0–9.4	9.5–9.9	10.0–10.4	10.5–10.9	11.0–11.9	12.0–UP
	CSM	.83	.81	0.76	0.72	0.68	0.65	0.62	0.59	0.54

GAS	COP	0.40–0.44	0.45–0.49	0.50–0.54	0.55–0.59	0.60–0.64	0.65–0.69	0.70 & UP
	CSM	1.50	1.25	1.20	1.09	1.00	0.92	0.89

MINIMUM SEER/EER LEVEL 7.8 FOR STRAIGHT COOL OR HEAT PUMPS; MINIMUM OF 7.5 EER FOR ROOM UNITS AND PTAC. FOR ROOM UNITS AND PTAC, CSM FOR EER 7.5 – 7.7 = .87. SEE TABLE ABOVE FOR EER > 7.7.

9I HOT WATER CREDIT POINTS (HWCP)

ELECTRIC RESISTANCE WATER HEATER		0
GAS WATER HEATER		10
INSTANTANEOUS WATER HEATER	ELECTRIC	4.5
	GAS	12.6
HRU (A/C) WATER HEATER	ELECTRIC BACKUP	8.8
	GAS BACKUP	15.2
HRU (HP) WATER HEATER	ELECTRIC BACKUP	9.7
	GAS BACKUP	15.4

HEAT PUMP WATER HEATER (DEDICATED HEAT PUMP)					
COP	1.60–1.89	1.90–2.19	2.20–2.49	2.50–2.79	2.80–3.00
CREDIT POINTS	9.0	11.4	13.1	14.4	15.4

SOLAR HOT WATER										
OVERALL SOLAR FRACTION*	0.1	0.2	0.3	0.4	0.5	0.6	0.7	0.8	0.9	1.0
CREDIT POINTS — ELECTRIC BACKUP	2.4	4.8	7.2	9.6	12.0	14.4	16.8	19.2	21.6	24.0
CREDIT POINTS — GAS BACKUP	11.4	12.8	14.2	15.6	17.0	18.8	19.8	21.2	22.6	24.0

*PERCENT OF ANNUAL HOT WATER PROVIDED BY SOLAR SYSTEM ÷ 100 = OVERALL SOLAR FRACTION

RESIDENTIAL CALCULATION*

FORM 900-A-84 — CLIMATE ZONES 7 8 9

COMPONENT			WINTER AREA	× WPM	= GROSS WINTER POINTS	SUMMER AREA	× SPM	= GROSS SUMMER POINTS
WALLS	CONCRETE	R 0–2.9		10.9			24.8	
		R 2.7–3.9	1119.4	6.6	7388.	1119.4	17.5	19589.5
		R 4.0–5.9		5.0			15.0	
		R 6.0 & UP		4.4			13.9	
	FRAME OR BRICK VENEER	R 0–10.9		9.6			30.5	
		R 11.0–18.9		2.5			13.9	
		R 19–25.9		1.5			8.6	
		R 26 & UP		1.1			6.5	
	COMMON			2.7			3.8	
DOORS	WOOD OR METAL			86.5			55.4	
	INSULATED			84.0			22.2	
	STORM DOOR			44.6			44.3	
	COMMON		36.7	21.6	793	36.7	6.9	253
CEILING	UNDER ATTIC	R 19–21.9		1.9			8.4	
		R 22–29.9		1.7			7.6	
		R 30 & UP		1.5			5.5	
	SINGLE ASSEMBLY NO ATTIC	R 6–7.9		5.4			22.6	
		R 8–9.9		4.0			17.3	
		R 10–11.9		3.5			14.6	
		R 12–18.9		2.5			10.6	
		R 19–21.9		1.9			8.4	
	COMMON		2197	1.7	3734.9	2197	2.0	4394
FLOOR OVER UNCONDITIONED SPACE	WOOD	R 0–6.9		5.8			6.6	
		R 7–10.9		2.4			2.9	
		R 11–18.9		2.1			2.3	
		R 19 & UP		1.4			1.5	
	CONCRETE	R 0–2.9		6.8			8.2	
		R 3–5.9		4.3			5.7	
		R 6–10.9		3.4			3.6	
		R 11–18.9	N/A	2.3		N/A	2.9	
		R 19 & UP		1.5			1.9	
	COMMON			1.7			2.0	

SLAB ON GRADE	EDGE INSULATION	PERIMETER	WPM	
PERIMETER	R 0–2.9	170.66	28.3	4830
	R 3–5.9		20.4	
	R 6 & UP		12.4	

16745.6 — 24236.5

EN Forms

ms 1/2/85

CITY OF MIAMI SPRINGS, FLA.
APPROVED
BUILDING INSPECTOR ______
PLUMBING INSPECTOR ______
ELECTRICAL INSPECTOR ______
FIRE INSPECTOR ______
PUBLIC WORKS ______

These drawings and copies thereof furnished by the architect are his property they are not to be used on other work and are to be returned upon demand at the completion of work. If this drawing or any part thereof is used in any manner without the consent of the architect the user thereof becomes indepted to the architect for full commission.

ENG.

ARCH.

jorge e. trilles, architect
miami, florida
1450 coral way, suite 6, /miami, fl. 33145 (305) 856-4972

DATE

JOB NO

SHEET 5 OF 5

LAST PAGE

300 FALCON AVE

Santana
Falcon Ave

Machado, Kristofer (Ptnr-Mia)

Subject: FW: Public Records Request
Attachments: 23-1366 INSPECTIONS.pdf; 23-0717 INSPECTIONS.pdf; 21-1143 INSPECTIONS.pdf; 200 N ESPLANADE CODE CASES.xlsx; 200 N ESPLANADE PERMIT HISTORY.xlsx

---

From: Sandra Duarte <duartes@miamisprings-fl.gov>
Sent: Friday, June 21, 2024 10:56 AM
To: Ferreira, Michelle (Ptnr-Mia) <michelle.ferreira@akerman.com>
Cc: City Clerk <cityclerk@miamisprings-fl.gov>
Subject: RE: Public Records Request

[External to Akerman]

Good morning Michelle,

As per our conversation, please find attached a portion of your requested items:

1. All permits issued from and after August 2021 (Completed)
2. Inspection history for all permits issued from and after August 2021 (Completed)
3. Copies of permit documents (plans, specs, surveys, etc.) **(Pending)**
4. Any variances approved or denied from and after August 2021 (NONE)
5. Uncured violations (if any) from and after August 2021 (Completed)

Once the rest of the items are collected I will reach out again.

Thank you for your patience,

Sandra Duarte
Administrative Assistant to the City Clerk
City of Miami Springs
201 Westward Drive
Miami Springs, Florida 33166
(305) 805-5000 Ext: 5005

Under Florida law, e-mail addresses are public records. If you do not want your e-mail address released in response to a public-records request, do not send electronic mail to this entity. Instead, contact this office by phone or in writing.
Please save a tree. Don't print this e-mail unless it's really necessary.

From: michelle.ferreira@akerman.com <michelle.ferreira@akerman.com>
Sent: Friday, June 21, 2024 9:37 AM
To: Sandra Duarte <duartes@miamisprings-fl.gov>
Cc: City Clerk <cityclerk@miamisprings-fl.gov>
Subject: RE: Public Records Request

Hi again – I have called several times over the past week and have not been able to get any feedback on the status of my request. Please let me know when the documents and information I requested will be available. Thanks.

Michelle N. Ferreira

Partner
Akerman LLP | 98 Southeast Seventh Street, Suite 1100 | Miami, FL 33131
D: 305 982 5667 | C: 786 546 8008
michelle.ferreira@akerman.com

From: Ferreira, Michelle (Ptnr-Mia) <michelle.ferreira@akerman.com>
Sent: Friday, June 14, 2024 10:33 AM
To: Sandra Duarte <duartes@miamisprings-fl.gov>
Cc: City Clerk <cityclerk@miamisprings-fl.gov>
Subject: Re: Public Records Request

Hi Sandra,

Checking in because I haven't heard from anyone and wanted to know the status of my request. Can you send me an update please?

Michelle N. Ferreira
Partner
Akerman LLP | 98 Southeast Seventh Street, Suite 1100 | Miami, FL 33131
D: 305 982 5667 | T: 305 374 5600 | F: 305 995 6968
michelle.ferreira@akerman.com

On Jun 3, 2024, at 1:54 PM, Sandra Duarte <duartes@miamisprings-fl.gov> wrote:

[External to Akerman]

Good afternoon,

We are in receipt of your public records request. Your request will be processed in accordance with the Florida Public Records Law. It has been forwarded to the proper department(s) for retrieval of your requested records. Someone will be in contact with you as soon as possible with an estimate of copying and staff research charges (if applicable) or if any additional information is required.

Please feel free to contact the City Clerk's Office at 305-805-5005 if you have any questions or concerns.

Thank you,

Sandra Duarte
Administrative Assistant to the City Clerk
City of Miami Springs
201 Westward Drive
Miami Springs, Florida 33166
(305) 805-5000 Ext: 5005

Under Florida law, e-mail addresses are public records. If you do not want your e-mail address released in response to a public-records request, do not send electronic mail to this entity. Instead, contact this office by phone or in writing.
Please save a tree. Don't print this e-mail unless it's really necessary.

From: michelle.ferreira@akerman.com <michelle.ferreira@akerman.com>
Sent: Friday, May 31, 2024 4:53 PM
To: City Clerk <cityclerk@miamisprings-fl.gov>
Subject: Public Records Request

Good afternoon. I am the owner of the residence located at 300 Falcon Ave. The house next door, 200 N Esplanade Dr, has been under construction for roughly 2 years and I would like to get more information about what is being done to this property. The information I am interested in reviewing regarding 200 N Esplanade Dr. is:

1. All permits issued from and after August 2021
2. Inspection history for all permits issued from and after August 2021
3. Copies of permit documents (plans, specs, surveys, etc.)
4. Any variances approved or denied from and after August 2021
5. Uncured violations (if any) from and after August 2021

Please let me know if there is anything you need from me. Thank you!

Michelle N. Ferreira
Partner
Akerman LLP | 98 Southeast Seventh Street, Suite 1100 | Miami, FL 33131
D: 305 982 5667 | C: 786 546 8008
michelle.ferreira@akerman.com

akerman

700+ Lawyers
26 Offices
akerman.com

CONFIDENTIALITY NOTE: The information contained in this transmission may be privileged and confidential, and is intended only for the use of the individual or entity named above. If the reader of this message is not the intended recipient, you are hereby notified that any dissemination, distribution or copying of this communication is strictly prohibited. If you have received this transmission in error, please immediately reply to the sender that you have received this communication in error and then delete it. Thank you.

This email has been scanned for spam and viruses. Click here to report this email as spam.

This email has been scanned for spam and viruses. Click here to report this email as spam.

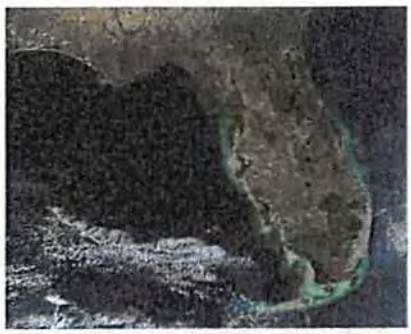

Florida Planning Officials Handbook













January 2022

About the Florida Planning Officials Training Program

The Florida Planning Officials Training program was developed by the University of Florida's Urban and Regional Department – a PAB-accredited graduate planning program in collaboration with agencies and organizations committed to the advancement of planning and growth management in Florida.

Sponsors

Initial funding for the development of the Florida Planning Officials training curriculum was provided by the following organizations:

The University of Florida
Florida Chapter of the American Planning Association
Florida Planning and Zoning Association
Florida Homebuilders Association
Hillsborough County City-County Planning Commission
Orange County Department of Growth Management

Editors

Gene Boles, FAICP
Gail Easley, FAICP
Susan Trevarthen, Esq., FAICP

For information regarding the ***Florida Planning Officials Training Program***, contact

Gene Boles, FAICP
941 350 3989
geneboles@gmail.com

Table of Contents

Introduction i

Chapter One: Planning and Growth Management in Florida I-1

What is Planning? I-1

Why Do Communities Plan? I-1

What Are the Benefits of Planning? I-2

What Happens Without Planning? I-2

A Plan Belongs to the Whole Community I-3

What is the Planning Process? I-3

The Evolution of Planning I-5

Origins of Planning in the United States I-5

Origins of Planning in Florida I-5

A New Mandate for Planning in the 1980s I-7

A Coordinated System I-8

Local Level I-10

State Level I-11

Regional Level I-12

Who are the Players in the Planning Process? I-14

Local Level I-15

State Level I-17

Regional Level I-18

Planning Officials Are Elected or Appointed Citizens Involved in the Planning Process I-20

The Work of the Planning Commission I-21

The Work of the Zoning Board I-22

The Work of the Board of Adjustment I-23

Table of Contents

Chapter Two: The Constitutional and Legal Framework of Planning II -1
Legislative ..... II -1
Quasi-judicial ..... II -1
The Constitutional Foundation ..... II –2
Florida Constitution ..... II –2
The Property Rights Issue in Florida ..... II -3
Federal Law ..... II -3
State Law ..... II -5
Primacy of the Comprehensive Plan in Florida ..... II -12
Zoning ..... II -15
Subdivision Regulation ..... II -16
Growth Management ..... II -18
Due Process ..... II -22
Substantive Due Process ..... II -22
Procedural Due Process ..... II -28

Chapter Three - The Ethics of Planning III –1
Why Ethics Is Important for the Planning Official ..... III –1
Conduct of the Planning Official ..... III –1
Financial Disclosure ..... III -2
Florida's Government in the Sunshine Law ..... III -2
Public Records ..... III -3
Ex Parte Communication ..... III -5
Conflict of Interest ..... III -8
AICP Code of Ethics and Professional Conduct ..... III -10

Table of Contents

Chapter Four: Making Planning Work IV -1

Effective Planning Officials ..... IV -1

Building Relationships ..... IV -2

What to Expect From Staff? ..... IV -5

Engaging the Public ..... IV -6

What is Citizen Participation? ..... IV -6

Community Visioning ..... IV -8

Who Should Be Involved? ..... IV -10

Methods for Encouraging Citizen Participation ..... IV -10

Citizen Interaction ..... IV -16

Public Meetings ..... IV -16

Public Hearings ..... IV -19

Community Workshops ..... IV -21

Charrettes ..... IV -22

Community Surveys ..... IV -22

Community Image Survey ..... IV -23

Five Principles for Effective Planning ..... IV -25

Principle #1 Begin With The Public ..... IV -25

Principle #2 Develop a Clear Community Vision ..... IV -25

The Principles of Smart Growth ..... IV -28

Principle # 3 Proactive Planning ..... IV -33

Principle # 4 Be Thorough and Consistent ..... IV -34

Principle # 5 Make It Easy to do the Right Thing ..... IV -35

Table of Contents

Chapter Five - The Comprehensive Plan	V -1
The Planning Process	V -1
Purposes of Planning in Florida	V -2
General Requirements of the Comprehensive Plan	V -2
Mandatory Elements	V -3
Future Land Use Element	V -3
Transportation Element	V -4
Utilities Element	V -5
Conservation Element	V -6
Recreation and Open Space Element	V -6
Coastal Management Element	V -7
Capital Improvements Element	V -8
Intergovernmental Coordination Element	V -8
Optional Elements	V -9
Special Emphasis	V -10
School Coordination	V -10
Urban Sprawl	V -12
Urban Infill and Redevelopment	V -14
Water Supply	V -17
Evaluating the Comprehensive Plan	V -17
Amending the Comprehensive Plan	V -18
Expedited State Review	V -18
State Coordinated Review	V -19
Small Scale Amendments	V -21

Table of Contents

Chapter Six - Implementing The Comprehensive Plan VI -1
Land Development Regulations ..... VI -1
Criteria for Determining Consistency ..... VI -3
Elements of Land Development Regulation ..... VI -4
Zoning ..... VI -5
Subdivision Regulations ..... VI -8
Design Standards and Improvement Requirements ..... VI -9
Concurrency—Adequate Public Facilities ..... VI -11
Planned Development ..... VI -12
Traditional Neighborhood Development ..... VI -13
Special Uses ..... VI -14
Administration and Procedures ..... VI -15
Rezoning ..... VI -15
Variances ..... VI -17
Nonconforming Uses and Lots ..... VI -19
Subdivision Review ..... VI -20
Fiscal Tools ..... VI -22
Capital Improvements Programming ..... VI -22
Development Impact Fees ..... VI -24
Fiscal Impact Analysis ..... VI -25
Development Agreements ..... VI -25
Community Development Districts ..... VI -26
Infill and Revitalization ..... VI -27
Community Redevelopment Areas ..... VI -27
Urban Infill and Redevelopment Areas ..... VI -29

Table of Contents

Chapter Six - Implementing The Comprehensive Plan (con't)

Growth Management Techniques ..... VI –31

Urban Service Areas ..... VI –31

Clustering—On-site Density Transfer ..... VI –32

Transfer of Development Rights ..... VI –33

Rural Land Stewardship ..... VI - 34

Sector Plans ..... VI –35

Introduction

The American Planning Association defines *Planning Officials* as *any appointed or elected officials involved in planning decisions for the betterment of a community, region, state, or country.* In Florida, a lot of people fit that description including elected officials, planning commissioners, zoning board members, board of adjustment members and others who serve on a variety of commissions and boards involved in planning and growth management decisions.

The job of the *planning official* is one of public trust and is one of the most rewarding ways you can serve your community. This handbook is designed to help you do that job. It serves as the text for a short course covering the basic elements of planning in Florida.

This course offers a mixture of fact, advice and commentary about the practice of planning in Florida. There is no attempt to comprehensively cover the subject. Rather our objective is to provide an overview of this important work and some basic survival skills for the *planning official*. You will not be an expert when you complete this course, but you should have a much greater understanding of planning and how you can play an effective role in shaping the future of your community.

Chapter One: Planning and Growth Management in Florida outlines the purposes of planning, how the growth management system in Florida evolved and how it works and who the players are in Florida's growth management system

Chapter Two: The Constitutional and Legal Framework of Planning explores the constitutional provisions that relate to planning, the "property rights" issue, the "primacy" of the comprehensive plan, the constitutional basis for zoning, subdivision regulations and growth management, and the substantive due process and procedural due process requirements.

Chapter Three: The Ethics of Planning examines the important ethical concepts that affect the work of the *planning official*. The "sunshine law", "public records", "ex parte communication", and "conflicts of interest". The AICP Code of Ethics and Professional Conduct is discussed.

Chapter Four: Making Planning Work explores the qualities of an effective planning officials. How a *planning official* relates to the public, the conduct of meetings, visioning exercises and other techniques and requirements for citizen participation are presented. Five Principles for Effective Planning are offered along with a discussion of "Smart Growth" and its application in Florida.

Chapter Five: The Comprehensive Plan provides an overview of the Comprehensive Plan, what it contains, its legal status, the process for its development, evaluation and amendment. Current issues and priorities including water supply planning and school coordination are also presented.

Chapter Six: Implementing the Comprehensive Plan provides a primer on land development codes including zoning, subdivision review, concurrency, planned development, traditional neighborhood development, variances, nonconforming uses, review procedures and other regulatory topics. Other implementation tools, techniques and procedures including "community redevelopment areas", "concurrency", capital improvements programs", "impact fees", "transfer of development rights", "rural land stewardship", and "sector planning" are discussed with emphasis on what the *planning official* needs to know.

Appendix. Reference material includes:

Appendix A: Definitions
Appendix B: Acronyms
Appendix C: AICP Code of Ethics & Professional Conduct
Appendix D: The Principles of Smart growth
Appendix E: The Charter of the New Urbanism
Appendix F: Information Sources

Chapter One: Planning and Growth Management in Florida

Chapter One - Planning Basics

Public planning is an organized way of meeting community needs through a local decision-making process.

What is Planning?

Planning is the word we use to describe how a community shapes and guides growth and development. The process may be called city planning, urban planning, or sometimes land use planning. The results of the planning process are contained in documents called comprehensive plans or growth management plans.

- An organized way of determining community needs and setting goals and objectives
- The art of anticipatory problem solving
- The thought that precedes decision making
- The process localities use to move from the reality of today toward the possibilities of tomorrow.

Why Do Communities Plan?

Communities plan to prepare for the future, to maximize strengths and minimize weaknesses.

Communities may engage in public planning for a variety of reasons.

- Prepare for the future
- Accommodate the present
- Anticipate change
- Maximize community strengths
- Minimize community weaknesses
- Respond to legislative charge
- Secure a sense of community coordination
- Deal with a scarce resource
- Build a sense of community
- Foster public health, safety, and welfare.

In short, communities plan because planning provides a benefit to the people of the community.

What Are the Benefits of Planning?

Effective planning ensures that future development

will occur where, when, and how the community wants. Several benefits are realized from the planning process:

- Quality of life is maintained and improved
- A vision, clearly stated and shared by all, described the future
- Private property rights are protected
- Economic development is encouraged and supported
- There is more certainty about where development will occur, what it will be like, when it will happen, and how the costs of development will be met.

If you want to make a great community happen, you must plan for it.

What Happens Without Planning?

Planning does make a difference. While some may argue that our communities today are poorly planned and fail to reap the benefits of planning, the cycle of development and redevelopment is carried out over many years. Through effective planning, our communities are constantly moving in the direction the people want. In this way, we avoid, mitigate, or correct the problems that occur with no planning at all. Those problems include:

- Sprawl
- Incompatible land uses
- No sense of place
- Disconnected development
- Congestion
- Loss of natural resources

If you do not plan, you have little say in the future of the community. If you want to make a great community happen, you must plan for it.

A Plan Belongs to the Whole Community.

Planning is about balancing competing interests and almost always involves difficult trade-offs. An effective plan reflects those trade-off decisions. The importance of the plan rests partially on the process

of preparing the plan. A plan belongs to the whole community and the members of the community should be part of the process to create, update, and amend the plan. Chapter 4, Making Planning Work, addresses the importance and processes of engaging the public in the planning process.

What is the Planning Process?

In Florida, we pay significant attention to the process of planning. Chapter 2 of this manual addresses a wide range of legal issues. However, as a process, the statutes focus more on the adopting process and the processes that occur at the state level to review the plan for compliance with the law than on the local processes that most citizens see. In contrast, *planning officials* are more likely to see the whole process, as they are responsible for the local comprehensive plan.

What exactly is the process for a local government to follow?

The process – the steps that lead to adopting a plan or plan amendment – can be summarized simply. Answer these three questions: 1) what do you have? 2) what do you want? And 3) how will you get it?

The contents and legal processes are described in Chapter 5. However, thinking about all of the statutory requirements and minimum state criteria in terms of these three simple questions may help planning officials and citizens better understand the overall planning process.

What do you have? This is called data and analysis. It means the collection of accurate, current information about the community. A community cannot maintain or change the current situation without knowing what the situation is for the community. It is the foundation for the planning process.

Planning for the future requires an understanding of the past and present. Collecting information and analyzing trends provides the basis for understanding and conclusions.

What do you want? Many communities conduct a visioning process to define the preferred future. Others discuss the future in meetings and agree on goals or other methods of defining the preferred future. This is the heart and soul of planning – people from all parts of the community and all interest areas coming together to describe the future they want to achieve.

Will this future community be exactly what any one person or group wants? Of course not, but it will be a collective statement of the future that we want together.

How will you get it? The document called a comprehensive plan describes in words, maps, and other graphics what the future community will be like and contains the policies to guide decision-making toward that future.

In Florida, plans are comprehensive, meaning the plan is not limited to land use or other physical design issues, but includes housing, recreation, coordination with other governments and agencies, financing the plan, and providing adequate public facilities for support current and future development.

Another important aspect of this question is the implementation of the comprehensive plan. Chapter 6 of this manual, *Implementing the Comprehensive Plan,* addresses implementation to make the plan a reality.

The Evolution of Planning

Planning and growth management in Florida is an evolving process. Its purposes and its legal and constitutional foundation are rooted in the framework for public planning that emerged in the United States during the twentieth century and in the specific acts of the Florida Legislature since the early 1970's.

Origins of Planning in the United States

The history of public planning in the United States

may be traced back to colonial days but public planning as practiced today was shaped primarily by events of the twentieth century.

The milestones shown on page 5 represent a very brief synopsis of the origins of public planning.

Origins of Planning in Florida

Planning and growth management in the United States evolved during the twentieth century. Key events framed the system in place today in Florida and throughout the nation.

Florida's modern planning and growth management system has its origins in the early 1970's. Three major statutes constituted the legal framework for planning in Florida in the 1970s.

The Florida State Comprehensive Planning Act of 1972 established a state comprehensive planning process and the formulation of a "State Comprehensive Plan". In 1978, the Legislature specified that the State Comprehensive Plan was *advisory only.*

Florida planning and growth management has its roots in the early 1970's with the passage of the Environmental Land & Water Management Act of 1972.

The Environmental Land and Water Management Act of 1972 focused on *areas of critical state concern* and *developments of regional impact.* These elements remain as important components of the current system.

Local Government Comprehensive Planning Act of 1975 required local governments to adopt and implement local plans.

The Community Planning Act of 2011 provides the legislative mandate for the current system.

A New Mandate for Planning in the 1980s

In 1980, the **Governor's Resource Management Task Force** concluded that the mandates for local planning had not been widely supported and that the vague goals and constant amendment process made the implementation of these local plans difficult, if not impossible.

An Environmental Land Management Study Committee convened in 1984 reached a similar conclusion regarding the effectiveness of planning in Florida. The findings of this study committee contributed to the dramatic overhaul of the legislative framework for planning and to the sys-

tem described in the remainder of this chapter.

Legislative Foundation. The State of Florida has developed an integrated planning system intended to ensure the coordinated administration of policies that address the multitude of issues posed by the state's continued growth and development.

Planning and Growth Management in the United States

1907	First local planning board created in Hartford., Connecticut
1913	New Jersey requires local planning board approval of plats – first control of land subdivision as a function of city planning
1915	US Supreme Court (Hadacheck vs. Sebastian) rules that the restriction of future profitable uses was not a taking of property without just compensation
1925	First Comp Plan adopted for Cincinnati - Cornerstone of American city planning (Alfred Bettman)
1926	Village of Euclid vs Amber Realty Co (Ohio) – Established constitutionality of zoning
1928	Standard City Planning Enabling Act published by US Dept of Commerce
1934	FHA created. Established minimum housing standards adopted as part of zoning and building codes
1970	EPA & NEPA – National Environmental Policy Act of 1970 created the Environmental Impact Assessment process
1972	US Supreme Court (Golden vs. Ramapo) – Upheld growth management.

The primary elements of this system were created by three key legislative acts:

- Chapter 163, Part II, *Florida Statutes (FS)*, Local Government Comprehensive Planning and Development Regulation Act. *The provisions of this act in their interpretation and application are declared to be the* ***minimum requirements*** *necessary to accomplish the stated intent, purposes, and objectives of this act; to protect human, environmental, social, and economic resources; and to maintain, through orderly growth and development, the character and stability of present and future land use and development in this state.*

- Chapter 186, *FS*: State and Regional Planning. Provides direction for the integration of state, regional and local planning efforts, and specifically requires the development of Strategic Regional Plans. Chapter 380, *FS*: Environmental Land and Water Management Act directs the integration and coordination of land and water management activities, and outlines the process and requirements for Developments of Regional Impacts and authorizes Areas of Critical State concern

Supporting legislation includes:

- Chapter 373, *FS*: Florida Water Plan / Regional Water Supply Plans

- Chapter 120, *FS*: Administrative Procedures Act

- Chapter 70 FS Relief from Burdens on Real Property Rights

- Chapter 1013, *FS* : Educational Facilities Act

In 2011, the Florida legislature enacted sweeping amendments to Florida's planning and growth management system. *"The Community Planning Act"* placed increased emphasis on the authority and responsibility of local governments to plan for and manage their while sharply reducing the role of the state land planning agency and the state in general.

A Coordinated System

The *Community Planning Act* recognizes the authority and responsibility of local government to plan while envisioning a coordinated system of planning at the state and regional levels

Local Level Planning

- Local Comprehensive Plan
- Land Development Regulations
- Capital Improvements Programming

State Level Planning

- State Land Planning Agency
- Florida Transportation Plan
- Florida Water Plan
- Areas of Critical State Concern

Regional Level Planning

- Strategic Regional Policy Plan
- Long-Range Transportation Plan
- Regional Water Supply Plan
- Developments of Regional Impact



"The Mandate'

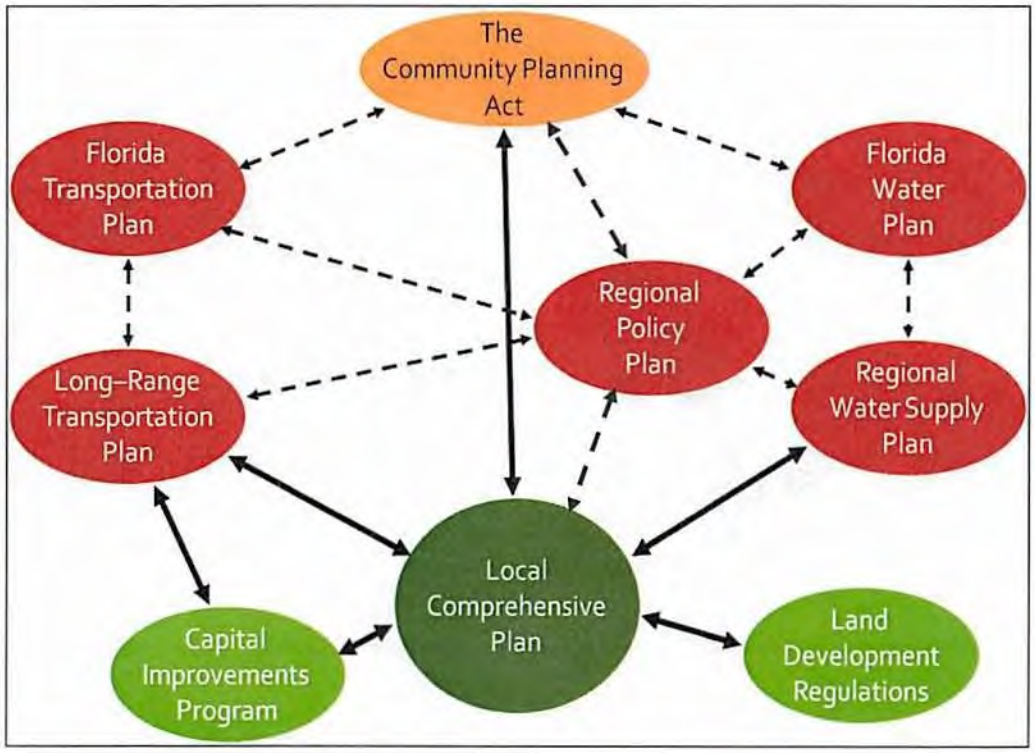

Local Level

The Local Government Comprehensive Plan

The Local Government Comprehensive Plan is the centerpiece of planning and growth management in Florida. The Community Planning Act requires that all counties and municipalities adopt and maintain a comprehensive plan.

The Comprehensive Plan is a blueprint to guide economic growth, development of land, resource protection and the provision of public services and facilities. The Comprehensive Plan implements the community vision typically through a series of "elements" that provide a framework for development and community building.

Land Development Regulations

Each local government is required to adopt and

enforce regulations implement its comprehensive plan. These regulations are required to address the subdivision of land, the use of land and water, the protection of potable water sources, drainage and stormwater management, the protection of environmentally sensitive lands, signage, the adequacy of public facilities and services and traffic flow.

Capital Improvements Program

Each local government is required to maintain a timetable or schedule of future capital improvements that may be necessary to support the growth contemplated by the Comprehensive Plan. This schedule will typically identify the start and completion date of projects, their estimated cost, the source of funding and their priority.

State Level

Florida Transportation Plan

The Florida Transportation Plan (FTP) is maintained by the Florida Department of Transportation (FDOT). The FTP establishes long range goals that provide a policy framework for the expenditure of federal and state transportation funds. Every five years, the FDOT updates this plan to respond to new trends and challenges to meet future mobility needs. The current FTP looks at a 50 year horizon (2060). Information about the 2060 FTP and other FDOT programs and activities can be found at http://www.dot.state.fl.us/planning/ftp/ .

Florida Water Plan

The Florida Department of Environmental Protection (FDEP) is responsible for protecting the quality of Florida's drinking water as well as its rivers, lakes, wetlands, springs and sandy beaches. To meet this responsibility the FDEP provides a range of programs and activities that are collectively referred to here as the Florida Water Plan. Information about these programs and activities can be found at http://www.dep.state.fl.us/water .

Areas of Critical State Concern

The ACSC program protects resources and public facilities of major statewide significance.

Designated Areas of Critical State Concern are:

- City of Apalachicola
- City of Key West
- Green Swamp
- Florida Keys (Monroe County)
- Big Cypress Swamp (Miami-Dade, Monroe and Collier counties)

The Community Development Division of the Department of Community Affairs reviews all local development projects within the designated areas and may appeal to the Administration Commission any local development orders that are inconsistent with state guidelines. The Division also is responsible for reviewing and approving amendments to comprehensive plans and land development regulations proposed by local governments within the designated areas.

Regional Level

Strategic Regional Policy Plans

A strategic regional policy plan contains regional goals and policies that address affordable housing, economic development, emergency preparedness, natural resources of regional significance, and regional transportation, and may address any other subject which relates to the particular needs and circumstances of the comprehensive planning district as determined by the regional planning council. Regional plans identify and address significant regional resources and facilities.

In preparing the strategic regional policy plan, the regional planning council seeks the full cooperation and assistance of local governments to identify key regional resources and facilities and document present conditions and trends with respect to the policy areas addressed; forecast future conditions and trends based on expected growth patterns of the region; and analyze the problems, needs, and opportunities associated with growth and development in the region, especially as those problems, needs, and opportunities relate to the subject areas addressed in the strategic regional policy plan.

Long Range Transportation Plans

Long Range Transportation Plans (LRTP) are typically prepared by a Metropolitan Planning Organization (MPO). The LRTP normally covers a 20 year period and identifies current and future transportation needs based on population projections and travel demand. More about MPOs and their role can be found at http://www.mpoac.org.

Regional Water Supply Plans

Regional Water Supply Plans (RWSP) are maintained by those water management districts where water sources were not adequate to meet projected needs. All water management districts with the exception of the Suwannee River Water Management District meet this criteria.

The RWSPs identify water resource and supply options that could meet the projected water needs. Each year the district prepares a 5 Year Water Resource Development Work Program describing im-

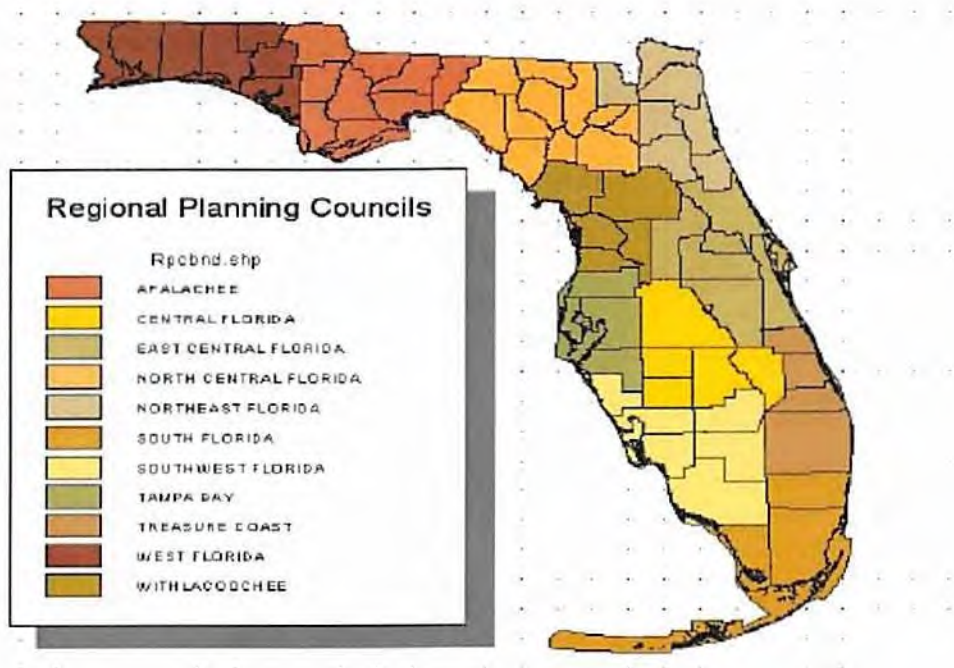

plementation strategies for the water for water resource development. More information about RWSPs can be found at http://www.dep.state.fl.us/water/waterpolicy/.

Developments of Regional Impact

The DRI process was created by the Environmental Land and Water Management Act of 1972 and is the State's longest standing growth management tool. The process requires regional and state oversight of large-scale land development projects deemed to have a regional impact.

The State defines the thresholds of development intensity that constitutes a regional impact (i.e. impact beyond the boundaries of a county). Developments exceeding this threshold must undergo regional and state review in addition to the local development review process.

Who are the Players in the Planning Process?

The types of participants in the Florida planning process are varied and range from state and regional agencies to local governing bodies, appointed committees and boards, organized interest groups, and – most importantly – citizens. Who are these players?

Local Level

- Local government including the elected governing body
- Local Planning Agency (LPA)
- Appointed boards, commissions and committees
- Local school board
- Property owners
- Homeowners associations
- Business owners
- Civic and business groups and organizations
- Citizens
- Professionals such as planners, engineers, architects, landscape architects, environmental consultants and attorneys

The *governing body* in every Florida city and county has final approval authority for most of the local growth management decisions. In particular these bodies must adopt and amend the Comprehensive Plan and the Land Development Code for their jurisdiction.

The *Local Planning Agency (LPA)* plays a pivotal role. The LPA is the agency responsible for preparing and maintaining the Comprehensive Plan, as well as recommending the plan to the governing body. Although the LPA can be the governing body. or even the planning department, in most cases this duty falls to a "planning commission" or a "land use and zoning board".

The implementation of the land development regulations normally involves another level of "citizen" boards. Typical examples include a zoning board, a board of adjustment, an "historical district review board", and others. Recently, the local school board has been given specific responsibility in the planning process.
Another type of local organization also derives its authority from the planning and growth management system. Authorities and special purpose districts are frequently created to carry out specific implementing actions. Community Redevelopment Authorities, special improvement districts and neighborhood associations are examples.

Citizens, individually and as part of organizations or groups, are a central part of the planning process. Citizens and organizations may be involved in working groups or task forces during the formulation of a plan or plan amendment, or may participate in workshops and public hearings conducted by the LPA and governing body. When a citizen or organization wants to challenge a plan because they believe it does not comply with the requirements of law, they must be recognized as an "affected party". Legal issues regarding the process to challenge a plan are addressed in Chapter Two.

Participation in planning and growth management activities at the local level involves numerous organizations – both public and private. It is in fact at the local level where the public participation and intergovernmental interaction is the greatest..

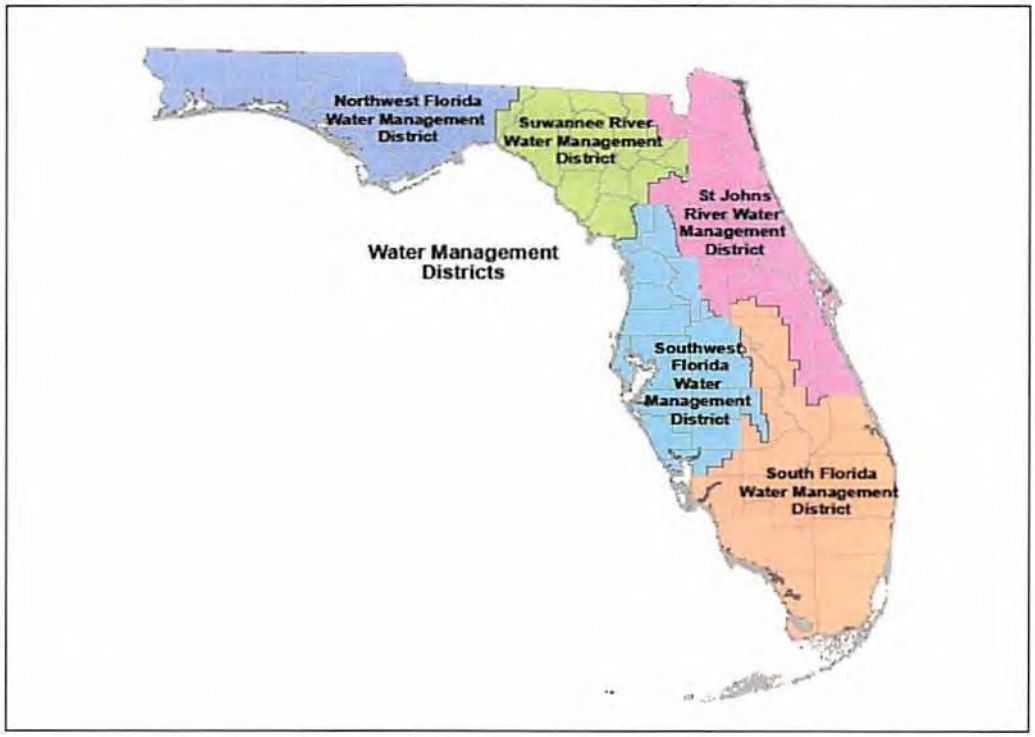

State Level

- Governor and cabinet
- Department of Economic Opportunity
- Department of Environmental Protection
- Department of State
- Department of Transportation
- Fish and Wildlife Conservation Commission
- Department of Agriculture and Consumer services
- Special interest and advocacy organizations such as 1000 Friends of Florida, the Sierra Club, the Florida Homebuilders Association, the Florida League of Cities and the Florida Association of Counties

The *Governor* is the Chief Planning Official for the State and the *Governor and Cabinet* serve as the Administration Commission. As the Administration Commission, the Governor and Cabinet is involved in matters such as final orders following a chal-

lenge to a comprehensive plan.

The *Florida Department of Economic Opportunity (DCA)* serves as the State Land Planning Agency. The Secretary of DEO supervises and administers the activities of DEO and advises the Governor, the Cabinet, and the Legislature with respect to mat-ters affecting community affairs and local govern-ment. The Secretary participates in the formula-tion of policies which best utilize the resources of state government for the benefit of local govern-ment.

The *Florida Department of Transportation* (FDOT) is responsible for the formulation, maintenance, and implementation of the Florida Transportation Plan. FDOT also reviews local plans and plan amendments as part of the compliance review process specifically related to transportation resources and facilities of state importance

The *Florida Department of Environmental Protection* is responsible for the formulation, maintenance, and implementation of the State Water Plan, as well as reviewing plans and plan amendments regarding air and water pollution, wetlands and other surface waters of the state, federal and state-owned lands, greenways and trails, solid waste, water and wastewater treatment, and the Everglades ecosystem restoration.

The *Department of State* reviews plans and amendments with regard to historic and archeological resources.

The *Fish and Wildlife Commission* reviews plans and plans amendments as they may relate to fish and wildlife habitat and listed species and their habitats.

The *Department of Agriculture and Consumer services* reviews plans and plans amendments as they may relate to agriculture, forestry and aquaculture.

The *Department of Education* reviews plans and plans amendments as they may relate to public

school facilities.

Regional Level

- Regional planning councils
- Water management districts
- Metropolitan Transportation Planning Organizations

Regional planning councils (RPCs) are established to provide a regional perspective and to enhance the ability and opportunity for local governments to resolve issues transcending their individual boundaries. Regional planning councils are specifically charged with the preparation of a Strategic Regional Policy Plan (SRPP) and may review plans and plans amendments for adverse impact on regional resources and facilities identified by the SRPP. RPCs also review plans and plan amendments regarding extrajurisdictional impacts that are inconsistent with the comprehensive plan of any affected local government within the region.

The regional planning council is recognized as Florida's only multipurpose regional entity that is in a position to plan for and coordinate intergovernmental solutions to growth-related problems on greater-than-local issues, provide technical assistance to local governments, and meet other needs of the communities in each region. Consequently, the regional planning councils have a specific role in review of developments of regional impact within their region.

Water management districts prepare regional or district water supply plans. The districts are review agencies for proposed plans and plan amendments and are concerned primarily with matters of stormwater and water supply.

The *Metropolitan Transportation Planning Organizations* are concerned with long range transportation planning and transportation improvement plans. Local government plans must be coordinated with these plans.

Planning Officials Are Elected or Appointed Citizens Involved in the Planning Process

The term "*Planning Officials*" was created by the American Planning Association to include a wide range of citizen participants in planning who have specific roles. City and County Commissioners are elected officials who serve on the governing bodies of local government. In Florida, these elected officials play a significant role in planning and growth management. They are the final authority for the adoption of a community's comprehensive plan, the enactment of its land development regulations and the approval of major development applications. City and County Commissions also typically appoint the officials who serve on the planning commissions and other boards of their community.

Planning Commissioners are appointed to serve on local planning commissions. Planning commissioners are the keepers of the Comprehensive Plan. They initiate and guide long-range planning efforts, conduct public meetings and hearings on proposed plans and projects, review development proposals for conformance with local plans and development regulations, and develop new planning programs.

Zoning Board members are appointed to serve on boards that review development applications. Zoning boards normally make recommendations to the local governing body regarding rezonings and other development approvals but may serve as the final approval authority for some actions prescribed by the local regulations. Planning commissions may serve as a zoning board to perform this function in many communities.

Board of Adjustment members are appointed, volunteer officials who serve on a board that hears appeals or requests for variances and conditional use approvals, all zoning and land use matters. The work of the board is generally limited to review of applications for conditional use permits, variances, and other appeals. In some communities, the functions of a planning board and a zoning board of appeals are performed by a joint planning and zoning commission.

The Work of the Planning Commission

The Planning Commission's goal is to make the comprehensive plan work. The Planning Commission's first responsibility is to recommend a comprehensive plan that reflects the vision and values of the community. The planning commission is a lay body that in many ways speaks for the community. These volunteer citizens give their time, energy, and intelligence to evaluating their community and its future, and advise the elected officials about future directions.

The Planning Commissions second goal is to move the plan from vision to reality. To do this, the planning commission must examine each issue and every application and ask the question, "Does this proposal further the goals and objectives of the comprehensive plan?" If so, the proposal conforms to the public interest as expressed in the plan and should normally be approved. If not, the proposal runs contrary to the public interest as expressed in the plan and should normally be rejected. All of this seems straightforward enough, but in practice things are much more complex. The comprehensive plan, for example, while offering guidance and showing direction, will not often provide automatic answers.

In addition to ensuring that the decisions of the planning commission conform to the comprehensive plan, it is also the duty of planning commission members to ensure that the plan is kept up to date. As technology changes, for example, what is practical or possible in the plan will also change. Further, as a community evolves, so too will the goals and objectives of its citizenry. New ideas will be introduced. Existing land uses will change. It may become evident that aspects of the plan are no longer relevant. For all of these reasons and more, a key task of the planning commission is to make certain that the plan is current and, if not, that the plan be updated and amended.

Evaluating and amending the plan should be a regular part of the planning commission's annual agenda. At least once per year, the commission should schedule time to review the existing plan and then develop any changes as required. This

will ensure that the plan remains an accurate reflection of community values and will also serve to reinforce the importance of the plan to the members of the planning commission itself.

The Work of the Zoning Board

The "Zoning Board" reviews development applications and makes recommendations to the local governing authority. The "zoning board" reviews development applications for consistency with the comprehensive plan, compliance with the land development regulations of the community and adherence to accepted planning practices and principles. The development review process normally involves an analysis and recommendation by an appointed body before a final decision is made by the local governing body. The procedures that guide this review are prescribed by the community's land development code and typically involve rezonings, subdivision review, site plan review and other processes.

A community may not have a "zoning board" but the review function described above does exist by one name or another within the planning structure. Often a planning commission will perform this role. In other communities, a hearing officer may be used. Regardless of where the responsibility is assigned, it is an essential function and one that typically involves the planning officials' most active and direct involvement in community issues.

The Work of the Board of Adjustment

Communities have "boards of appeal" or "boards of zoning adjustment". For convenience, the term "board of adjustment" is used. The moment a land development code is adopted, the work of the board of adjustment begins. As the name implies, the focus of the board's work is zoning code related appeals, but just as with the planning commission and zoning board, a second goal of the board of adjustment is to implement the comprehensive plan, or to at least assure that its decisions don't violate the comprehensive plan.

The "board of adjustment" is charged with a complex set of duties that typically include:

- Deciding on variances to the land development code;
- Reviewing appeals to decisions of the code administrator;
- Interpreting the meaning and the intent of the land development code; and often
- Evaluating special exceptions or conditional uses.

Chapter Two - The Constitutional and Legal Framework of Planning

Planning officials **are involved in both legislative and quasi judicial decisions and the *planning official* must understand the distinction**

Legislative**: Making the law or policy. In Florida, usually the exclusive province of the governing body, but may involve a recommendation from planning board members.**

Quasi-Judicial**: Applying the law or policy. Planning officials sometimes exercise final decision-making authority, and otherwise make recommendations to the governing body**

Community planning must be conducted within a constitutional and legal framework. The decisions made in this process must meet established constitutional and legal standards of **due process, fairness and equity for all participants in the planning process.**

Decisions made by Planning Officials can be classified as:

Legislative. Legislative actions are decided by an elected body such as a city or county commission. In these decisions, appointed officials (planning commissioners or zoning board members) may recommend the rules to be used for the planning process in the community. Public officials may exercise broad discretion in the discharge of their legislative responsibilities.

Quasi-judicial. Local governments have the discretion to act within the range of options established within their comprehensive plan and code of ordinances. When making such decisions, a planning official must weigh the facts and determine whether a proposal is consistent with existing plans and requirements. The degree of discretion is limited to a determination of consistency with established standards. For example, is the zone change consistent with the criteria laid out for granting of the zone change and with the land use category?

In Florida, the adoption of the Comprehensive Plan (and plan amendments) is legislative, as is the adoption and amendment of the text of the Land Development Code. Large scale, jurisdiction-wide rezonings involving policy making on general scale are also legislative. Site-specific zoning changes, special uses, special exceptions, site plans and subdivision review are quasi-judicial. This distinction is critical because the rules of conduct and degree of discretion for a legislative act vary significantly from a quasi-judicial decision.

The Constitutional Foundation

US Constitution

The U.S. and Florida Constitutions protect speech and religion from excessive regulation, and require that similarly situated persons be treated similarly unless there is a rational basis to treat them differently.

FIRST AMENDMENT: CONGRESS SHALL MAKE NO LAW RESPECTING AN ESTABLISHMENT OF RELIGION, OR PROHIBITING THE FREE EXERCISE THEREOF; OR ABRIDGING THE FREEDOM OF SPEECH, OR OF THE PRESS; OR THE RIGHT OF THE PEOPLE PEACEABLY TO ASSEMBLE, AND TO PETITION THE GOVERNMENT FOR A REDRESS OF GRIEVANCES. (APPLIED TO STATE AND LOCAL GOVERNMENTS THROUGH THE FOURTEENTH AMENDMENT).

FIFTH AMENDMENT: NO PERSON SHALL BE . . . DEPRIVED OF LIFE, LIBERTY, OR PROPERTY, WITHOUT DUE PROCESS OF LAW; NOR SHALL PRIVATE PROPERTY BE TAKEN FOR PUBLIC USE WITHOUT JUST COMPENSATION.

FOURTEENTH AMENDMENT: SECTION 1. . . . . NOR SHALL ANY STATE DEPRIVE ANY PERSON OF LIFE, LIBERTY, OR PROPERTY, WITHOUT DUE PROCESS OF LAW; NOR DENY TO ANY PERSON WITHIN ITS JURISDICTION THE EQUAL PROTECTION OF THE LAWS.

Florida Constitution

ARTICLE I, SECTION 9. DUE PROCESS.--NO PERSON SHALL BE DEPRIVED OF LIFE, LIBERTY OR PROPERTY WITHOUT DUE PROCESS OF LAW . . . .

No person may be deprived of property without due process of law, nor property taken for public use without just and full compensation.

ARTICLE II, SECTION 7. NATURAL RESOURCES AND SCENIC BEAUTY.—(a) IT SHALL BE THE POLICY OF THE STATE TO CONSERVE AND PROTECT ITS NATURAL RESOURCES AND SCENIC BEAUTY. ADEQUATE PROVISION SHALL BE MADE BY LAW FOR THE ABATEMENT OF AIR AND WATER POLLUTION AND OF EXCESSIVE AND UNNECESSARY NOISE AND FOR THE CONSERVATION AND PROTECTION OF NATURAL RESOURCES.

ARTICLE X, SECTION 6. EMINENT DOMAIN.-- (a) NO PRIVATE PROPERTY SHALL BE TAKEN EXCEPT FOR A PUBLIC PURPOSE AND WITH FULL COMPENSATION THEREFOR PAID TO EACH OWNER OR SECURED BY DEPOSIT IN THE REGISTRY OF THE

COURT AND AVAILABLE TO THE OWNER.

The Property Rights Issue in Florida

Federal Law

The U.S. Constitution states that "private property may not be taken for public use without just compensation." It is important to note that takings are not prohibited; rather, they are required to be for a public use and to be accompanied by the payment of just compensation. The most obvious kinds of takings are physical appropriations, such as where the government occupies private property and displaces the private property owner in a time of war or emergency.

In the 1920s, the U.S. Supreme Court first recognized that there could be a taking that was not physical in nature – a "regulatory taking" where a regulation of property would be so severe in its impacts on the property owner that it could fairly be considered analogous to a physical occupation of the property. *Pennsylvania Coal Co. v. Mahon*, 260 U.S. 393 (1922) considered a challenge to a Pennsylvania statute which prohibited the underground mining of coal if such mining would cause the subsidence of dwellings on the surface.

The Court famously said that, while property may be regulated to a certain extent, if the regulation "goes too far," it can constitute a regulatory taking. It also offered that "a strong public desire to improve the public condition is not enough to warrant achieving the desire by a shorter cut than the constitutional way of paying for the change." While the court invalidated the statute, a strong dissent by Justice Brandeis made the case that a "reciprocity of advantage" existed in this regulation, so that the advantage flowing to an individual property owner from uniform regulation of property to assure civilized living conditions was in proper relationship with the advantages flowing to society from the regulatory constraints on an individual property owner's use.

Exactly how far was "too far" for a regulation was left for another day. It was not until the 1970s, and the case of *Penn Central*, that the Court began

to answer the question by picking up on Justice Brandeis' notion of analyzing the balance of the benefits and burdens of the regulation. In 1987, the Court considered a challenge to a very similar Pennsylvania coal mining regulation and, this time, concluded that it did not result in a regulatory taking. *Keystone Bituminous Coal Ass'n v. DeBenedictis*, 480 U.S. 470 (1987). With *Lucas* in 1992, the Court completed its outline of those instances which would automatically result in a taking: physical occupation as in *Penn Coal*, and denial of all economically beneficial use, as in *Lucas*. Where a regulation posed neither of these extreme circumstances, the *Penn Central* balancing test would be applied, as recently reaffirmed unanimously in 2005 in *Lingle*. In *Tahoe-Sierra Preservation Council*, the Court decided that reasonable moratoria do not constitute per se takings under *Lucas*; rather, they are also analyzed under *Penn Central*'s balancing test..

***Lingle v. Chevron, USA*, 544 U.S. 528**
U.S. Supreme Court (2005)

The typical regulatory taking case requires a balancing of benefits and burdens in order to determine if there is taking liability.

Facts: The State of Hawaii regulated the maximum rent that the oil companies could charge dealers who sought to rent service stations.

Issue: Can a regulation's failure to "substantially advance" a legitimate state interest result in takings liability and require compensation?

Rule: No. A unanimous court held that "substantially advance" is a substantive due process concept, with no place in takings analysis. Absent a physical occupation or denial of all economically viable use, regulations must be analyzed under the balancing test of *Penn Central Transp. Co. v. New York City*, 438 U.S. 104 (1978), which considers the regulation's economic impact on the claimant, the extent to which it interferes with distinct investment-backed expectations, and the character of the government action.

Analysis: The "substantially advance" test fails to address the issues of public and private benefit and burden which are key to any takings inquiry, so it sheds no light on whether the regulation is tantamount to a physical expropriation of the property. It also implicitly calls into question legislative judgments as to the efficacy of regulatory strategies -- judgments which federal courts are ill-suited to make and to which the courts have traditionally deferred. Because a failure to "substantially advance" a legitimate interest is not relevant to the takings analysis, the statute was upheld. The Court explains all of the key takings cases, and how they should be applied to different factual circumstances.

State Law

The State of Florida is a "strong" property rights state and has expanded upon the property rights protections afforded in the US Constitution

The Florida Constitution, Article I, Section 2, states that *"All natural persons…. are equal before the law and have inalienable rights, … to acquire, possess and protect property….."*

Article X, Section 6 states that "no private property shall be taken except for a public purpose and with full compensation therefore."

Florida cases interpreting the takings clause are very similar to federal regulatory takings law in all respects, except that the state measure of "full compensation" is somewhat different that the federal measure of "just compensation." However, Florida's Legislature has adopted additional protections for private property rights. The growth management statutes include a statement of legislative intent regarding property rights:

It is the intent of the Legislature that all govern-

***Lucas v. South Carolina Coastal Council*, 505 U.S. 1003**
U.S. Supreme Court (1992)

Denying all economically viable use is a per se regulatory "taking" requiring compensation.

Facts: Lucas bought beachfront property on an island in order to build a residential development. Two years later, after the development was largely complete, the South Carolina Legislature passed a law that prohibited development of Lucas' remaining land because most of it was located seaward of the state's coastal setback and subject to erosion. Lucas filed suit to allow the development of the last two lots, purchased for $975,000, claiming that the law constituted a taking of his property without just compensation.

The trial court ruled his in favor and found that the new law deprived Lucas of 100% of the economic value of the land, and ordered the Council to pay $1.2 million to Lucas. The Supreme Court of South Carolina reversed, saying that the statute served a valuable public purpose and therefore no compensation was required by the Fifth Amendment. Lucas appealed to the U.S. Supreme Court.

Issue: Did the law's effect on the economic value of Lucas's remaining land constitute a "taking" under the Fifth and Fourteenth Amendments requiring "just compensation"?

Rule: When the state deprives a property owner of 100% of the economic value of their land for some public purpose, it is a compensable taking unless the use that is being taken away was never part of the title to the land in the first place. For example, it's not a taking to deprive the owner of the right to create a nuisance on their land, because that wasn't part of their property rights anyway.

Analysis: The Court says that there are two clear-cut cases of regulatory "takings":

1. Physical occupation of private property
2. Denial of all economically productive use of private property

This case falls into the latter category. The Court acknowledges that there are many occasions when such regulation falls short of a compensable taking. The Court even recognizes that deprivation of 90% or more of value may not constitute a taking. It is reasonable for property owners to expect that their property will be restricted in some ways. One way to look at this is to say that certain implied limitations exist in the title to the land. The government doesn't need to compensate for making *explicit* limitations that were previously *implicit*. In order for South Carolina to prevail on remand, it must show that common law principles of nuisance and property forbid the intended use of the land. These principles involve the balancing of social harm against private rights and evolve over time as society evolves. On remand, the state court decided that the law of South Carolina did not prohibit the development of these lots.

Tahoe-Sierra Preservation Council, Inc. v. Tahoe Regional Planning Agency, 535 U.S. 302
U.S. Supreme Court (2002)

While generally upheld without the requirement of compensation, moratoria can constitute a compensable taking if they go on too long.

Facts: The regional planning agency placed two temporary moratoria on development of the slopes surrounding Lake Tahoe, lasting a combined total of 32 months. The purpose of the moratoria was to allow time to complete a comprehensive land-use plan for the area and impose regulations to protect the Lake's water quality.

Issue: Does a 32-month prohibition on development constitute a compensable taking under Lucas by depriving the owner of all economically beneficial use?

Rule: No, by a 6-3 majority. The regulation was temporary in nature, and thus *Lucas* did not apply. Moratoria are analyzed under *Penn Central,* and the challenger had admitted that there was no taking under *Penn Central.* If moratoria last longer than a year, they may deserve "special skepticism." Here, the combined 32-month moratoria were justified on the factual circumstances.

Analysis: The "essentially ad hoc, factual" analysis of *Penn Central* applied. Looking at the parcel as a whole, full use of the property returned at the end of the moratoria and thus all use was not taken. While the Court has long stated that protecting property owners from bearing public burdens "which, in all fairness and justice, should be borne by the public as a whole" is a principal purpose of takings law, deeming a temporary loss to be a complete deprivation of value would be neither fair nor just. Moratoria involve a clear reciprocity of advantage. However, a moratorium that drags on too long could constitute a taking. "Too long" is determined by the good faith evidenced in and scope of the planning effort, the reasonable expectations of the property owner, and the extent of the moratorium's actual impact on property value. The balance weighs more strongly in favor of the moratorium when it is directed to a broad range of properties rather than singling out one property owner for delay. A *per se* time limit could work to rush the process such that interested parties would be denied their opportunity for input into the plan, because regulations would need to be quickly completed before additional property owners develop and thereby evade regulation. However, moratoria lasting more than one year may deserve special skepticism.

mental entities in this state recognize and respect judicially acknowledged or constitutionally protected private property rights. It is the intent of the Legislature that all rules, ordinances, regulations, and programs adopted under the authority of this Act must be developed, promulgated, implemented, and applied with sensitivity for private property rights and not be unduly restrictive, and property owners must be free from actions by others which would harm their property. Full and just compensation or other appropriate relief must be provided to any property owner for a governmental action that is determined to be an invalid exercise of the police power which constitutes a taking, as provided by law. Any such relief must be determined in a judicial action.....

The Legislature also has adopted the "**Bert J. Harris, Jr., Private Property Rights Protection Act,**" Chapter 70, Florida Statutes, which expands property rights in Florida and addresses how property rights are to be treated in the planning and growth management process.

1. *The Legislature recognizes that some laws, regulations, and ordinances . . ., as applied, may inordinately burden, restrict, or limit private property rights without amounting to a taking under the State Constitution or the United States Constitution. The Legislature determines that there is an important state interest in protecting the interests of private property owners from such inordinate burdens. Therefore, it is the intent of the Legislature that, as a separate and distinct cause of action from the law of takings, the Legislature herein provides for relief, or payment of compensation, when a new law, rule, regulation, or ordinance . . ., as applied, unfairly affects real property.*

When ***a specific action of a governmental entity has inordinately burdened an existing use of real property or a vested right to a specific use of real property, the property owner of that real property is entitled to relief*** *.....*

(3)(a) The existence of a "vested right" is to be dete mined by applying the principles of equitable estoppel or substantive due process under the

common law or by applying the statutory law of this state.

(3)(b) The term "existing use" means an actual, present use or activity on the real property, including periods of inactivity which are normally associated with, or are incidental to, the nature or type of use or activity or such reasonably foreseeable, nonspeculative land uses which are suitable for the subject real property and compatible with adjacent land uses and which have created an existing fair market value in the property greater than the fair market value of the actual, present use or activity on the real property.

The Bert Harris Act provides a property owner's right to seek compensation for governmental actions that inordinately burden the use of property, after first filing a claim with the government and allowing the government the opportunity to change its mind and provide regulatory relief in lieu of compensation.

(3)(d) The term "action of a governmental entity" means a specific action of a governmental entity which affects real property, including action on an application or permit.

(3)(e) The terms "inordinate burden" or "inordinately burdened" mean that an action of one or more governmental entities has directly restricted or limited the use of real property such that the property owner is permanently unable to attain the reasonable, investment-backed expectation for the existing use of the real property or a vested right to a specific use of the real property with respect to the real property as a whole, or that the property owner is left with existing or vested uses that are unreasonable such that the property owner bears permanently a disproportionate share of a burden imposed for the good of the public, which in fairness should be borne by the public at large. The terms "inordinate burden" or "inordinately burdened" do not include temporary impacts to real property; impacts to real property occasioned by governmental abatement, prohibition, prevention, or remediation of a public nuisance at common law or a noxious use of private property; or impacts to real property caused by an action of a governmental entity taken to grant relief to a property owner under this section.

(4)(a) Not less than 180 days prior to filing an action under this section against a governmental entity, a property owner who seeks compensation under this section must present the claim in writing to the head of the governmental entity . . . . The property owner must submit, along with the

claim, a bona fide, valid appraisal that supports the claim and demonstrates the loss in fair market value to the real property.

(4)(c) ....., the governmental entity shall make a written settlement offer to effectuate:

1. *An adjustment of land development or permit standards or other provisions controlling the development or use of land.*
2. *Increases or modifications in the density, intensity, or use of areas of development.*
3. *The transfer of developmental rights.*
4. *Land swaps or exchanges.*
5. *Mitigation, including payments in lieu of onsite mitigation.*
6. *Location on the least sensitive portion of the property.*
7. *Conditioning the amount of development or use permitted.*
8. *A requirement that issues be addressed on a more comprehensive basis than a single proposed use or development.*
9. *Issuance of the development order, a variance, special exception, or other extraordinary relief.*
10. *Purchase of the real property, or an interest therein, by an appropriate governmental entity.*
11. *No changes to the action of the governmental entity.*

There are many defenses to Harris Act claims: they do not apply to temporary restrictions such as moratoria, to actions taken prior to May 11, 1995, or to actions related to transportation facilities, for example.

Primacy of the Comprehensive Plan in Florida

The **local comprehensive plan** was intended by the framers of Florida's 1985 Growth Management Act to be the centerpiece of planning and growth management in Florida. The courts have consistently upheld this legal structure. The Community Planning Act enacted in 2011 retains this emphasis.

Each local government in Florida is required to adopt a comprehensive plan. Once this plan is adopted and found to be "in compliance" by the State planning agency, the Department of Community Affairs, all actions related to planning and growth management, including the regulation of land use and development, must be consistent with the comprehensive plan.

The Florida Supreme Court defined the role of the local comprehensive plan in relation to zoning in the *Board of County Commissioners of Brevard County v. Snyder (see insert)*. The court held that a property owner who is seeking rezoning or development approval must demonstrate that its application is consistent with the comprehensive plan and complies with the land development regulations. Once the owner has met this legal requirement, the burden shifts to the local government to demonstrate that denial of the petition accomplishes a legitimate public purpose and is not arbitrary, discriminatory or unreasonable. A tie goes to the local government. If the record contains substantial competent evidence in favor of the local government and in favor of those opposing the local government's action, and the action is reasonable, the local government's judgment will be upheld.

In *Yusem*, the Court later clarified that all amendments to the comprehensive plan are legislative, even if they only affect a small number of properties.

Martin County v. Yusem, 690 So. 2d 1288
Supreme Court of Florida, 1997

Facts: Yusem sought to change the plan designation for his 54 acres from Rural Density to Estate Density and concurrently obtain approval of a rezoning from A-1 to PUD. The County denied the request.

Issue: Is a plan amendment affecting only one parcel legislative?

Rule: All plan amendments are legislative decisions subject to fairly debatable standard of review, regardless of size.

Analysis: Decisions about the plan are legislative because they set policy. That policy is then implemented by quasi-judicial zoning decisions.

Brevard County v. Snyder, 627 So. 2d 469
Supreme Court of Florida, 1993

Facts: The Snyders applied to rezone their half-acre property on Merritt Island from general use (GU) (one single-family unit) to medium density multi-family residential development (RU-2-15) (7.5 multi-family units). The planning and zoning board and the County planning staff supported the rezoning, but the County Commission denied it without stating a reason for the denial.

Issue: Is the decision whether to rezone the Snyders' property legislative or quasi-judicial? Does a property owner that seeks to rezone their property have the burden of proving that the application is consistent with the city's plan and that it complies with all aspects of the zoning ordinance?

Holding: The formulation of the general rule of policy is in adoption of the comprehensive plan. Because Florida adopted mandatory comprehensive planning in 1985 and zoning decisions are now required to be consistent with the plan, zoning decisions applicable to a limited number of persons or properties should no longer be considered legislative and instead should be treated as quasi-judicial applications of plan policy to specific circumstances. Consistency with the plan must be judged strictly, but local governments are not required to immediately grant the full rights available under the land use designation because comprehensive plans anticipate gradual and orderly growth over a long period of time. However, comprehensive, city-wide rezonings may still be considered as formulating policy and treated as legislative; the character of the hearing is a relevant factor. In a quasi judicial hearing on a rezoning, a property owner has the burden to prove that its application is consistent with the comprehensive plan and land development regulations. If it does, then he burden will shift to the County to demonstrate that maintaining the existing zoning classification accomplishes a legitimate public purpose, and is not arbitrary, discriminatory or unreasonable. If the County meets this burden, the rezoning should be denied. If any of several zoning categories would be consistent with the plan, then the County's decision will be upheld if reasonable. The property owner is entitled to a hearing before an unbiased decisionmaker, to present its case, and to cross-examine witnesses. Findings of fact and conclusions of law are not required; rather, there must be substantial competent evidence in the record supporting the local government's decision.

Pinecrest Lakes v Shidel
4th District Court of Appeals (2001)

Facts: In 1981, Pinecrest Lakes, Inc. bought 500 acres of land which they developed into the 10-phased Pinecrest Lakes development. In 1986, the Shidels bought a one-acre lot in Phase 1 and built their home. Phases 1 thru 9 were single family detached homes on large lots. Phase 10 consisted of 21 acres and was designated in the Martin County Comprehensive Plan for "medium density" allowing attached housing with a maximum of 8 units per acre. Phase 10 - the Villas at Pinecrest Lakes—was transferred to a separate entity in 1997. The developer requested approval of 136 multi-family units at 6.5 units per acre. Martin County approved the application. The Comprehensive Plan allowed a maximum of 168 units, but also required that "for structures immediately adjacent, any new structures must be comparable to and compatible with those already built." The residents, including the Shidels, filed suit, alleging that the approved development was inconsistent with the comprehensive plan because the multi family phase was "immediately adjacent" and not "comparable to or compatible with" the prior single family, large lot phases.

Procedure: The trial court dismissed residents' suit, ruling that the development was consistent with the County's comprehensive plan. The residents appealed. In the meantime, the developer proceeded with the construction of 5 of the planned 19 multi-family buildings at its own risk as the litigation proceeded. The appeals court reversed and sent the case back to the trial court. The trial court then ruled that the apartments were in violation of the comprehensive plan. As a remedy, the residents demand removal of the 5 buildings. In response, the developer offered to construct a buffer. On July 6, 1999, the trial court granted the residents' remedy and ordered destruction of the 5 apartment buildings, and the developer appealed the remedy. In February 2000, the residents and the developer settle for $400,000. The Shidels, however, did not settle. On September 26, 2001, the appeals court upheld the remedy and ordered the buildings torn down. On September 5, 2002, the buildings were torn down.

Issue: When a developer proceeds at its own risk to construct buildings that are the subject of litigation, can a court order the buildings to be demolished when the developer is ultimately unsuccessful in the litigation and the buildings are determined to be inconsistent with the comprehensive plan?

Holding: Yes. If the buildings are inconsistent with the plan, removal is an appropriate remedy. Implementation of the plan, whether through rezonings or approvals of individual developments, is quasi-judicial. The planning statute allows affected individuals, broadly defined, to challenge such decisions on the basis of inconsistency with the plan, and the County's decision must be reviewed by strict scrutiny.

Zoning

Zoning is the division of a city or county into districts for the purpose of regulating the use of private land

Zoning is the division of a city or county into districts for the purpose of regulating the use of private and, in some cases, public land. Such zones are mapped and, within each district, the text of the zoning ordinance will typically specify the permitted principal and accessory uses, the bulk of buildings, the required yards, the necessary off-street parking and other prerequisites for development. Florida's growth management statute requires that the land development regulations adopted by local governments include a zoning component.

Zoning was first found to be constitutional by the US Supreme Court in 1926 in *Village of Euclid v Ambler Realty Co* (see insert). Prior to that case, there were scattered efforts on the part of communities to regulate the use of land. While ordinances to control height in designated areas had been upheld, the regulation of uses in specified blocks of a municipality had been less successful when challenged in the courts. Zoning represented the first effort on the part of the public to regulate all private land in a comprehensive fashion.

Zoning is an exercise of the police power i.e. the power to regulate activity by private persons for the health, safety and general welfare of the public

Zoning is an exercise of the "police power:" the power to regulate activity by private persons for the health, safety and general welfare of the public. As noted in the constitutional excerpts above, county governments enjoy no such home rule or police power authority except as it may be delegated to them by the state. Charter counties and municipalities, however, do possess home rule police powers to regulate in any manner they see fit, as long as the regulation is not inconsistent with general law (such as a statute). In general, charter counties and municipalities can be stricter than general law and still be considered consistent with it, unless it is determined that an entire field of regulation has been preempted to the state or federal government (such as gun control).

Village of Euclid v. Ambler Realty Co.
U.S. Supreme Court (1926)

Facts: The Village of Euclid, Ohio enacted zoning regulations affecting Ambler's 68 acre tract of land. Ambler sought an injunction restraining the enforcement of the ordinances. The ordinance establishing a "comprehensive zoning plan," based upon 6 classes of use, 3 classes of height and 4 classes of area regulations. Euclid was one of the earliest suburbs. It was located near the edge of Cleveland and zoning was adopted to prevent the expansion of Cleveland into Euclid. The zoning was cumulative; for example, each more liberal zone contained within it all the uses permitted in the more restrictive zones. This is where the term "euclidean" zoning originates. Ambler claimed that this ordinance substantially reduced the market value of the property by limiting its use and violated the Fourteenth Amendment because it deprived the owner of liberty and property without due process of law and denied it the equal protection
of the law. Ambler offered no evidence that any specific part of the regulation actually had any appreciable effect on the value or marketability of its lands, but instead attacked the ordinance as it might apply to anyone.

Issue (s): Does zoning violate the due process and equal protection clauses of the Fourteenth Amendment on its face? Is it unreasonable and confiscatory?

Holding: No. In general, zoning is adopted for the public health, safety and welfare and represents a proper use of the police power. However, depending on the circumstances and conditions, a specific zoning ordinance might be unconstitutional if it had no rational basis and failed to protect a legitimate governmental interest. Euclid's ordinance was constitutional on its face. The ordinance did not pass the bounds of reason and assume the character of merely arbitrary fiat, and was therefore not constitutional.

Subdivision Regulation

Subdivision regulations provide standards and a set of procedures for dividing land into separate parcels, which are intended to assure minimum public safety, health, welfare and amenity standards. The regulation of subdivisions is based on the police power, similar to zoning. Local government regulation of subdivisions must be in accordance with, but can be stricter than state enabling legislation if the local government is a home rule jurisdiction.

The purpose of subdivision regulations is to protect future owners or occupants of newly developed land from unhealthy, unsafe, or inadequate conditions, and to prevent current residents from footing the entire bill for providing supportive infrastructure for the newly developed land.

The original, and still an important, function of subdivision regulation is to accurately and legally define each parcel of land to permit transfer of the lots form one owner to another, and to allow each owner

to be clear about, and have legal claim to, exactly what is owned. Through surveying and the recording of a plat, subdivision regulations help to avoid land disputes between neighbors as well as assign responsibility and ownership for each parcel of land.

From this original purpose, subdivision regulations have come to serve many other purposes. Modern regulations provide detailed standards governing the geometric shape, sizes and configuration of lots; required levels of access to surrounding roads; the minimum width and design of streets; whether curbs, sidewalks, and gutters will be built and to what specification; required water and sewer lines; requirements for street lights and trees; and the dedication of land for public use. In addition to protecting public safety, subdivision regulations serve an increasingly complex set of planning goals.

Subdivision regulations have also been expanded to include environmental and local government fiscal concerns. Regulations typically contain requirements for the prevention of flooding, water quality control, the provision of roads to handle increased traffic, and the provision of school and park sites, and may also require the establishment of special districts or homeowners associations to assume responsibility for the care and maintenance of the amenities of the development, thereby protecting the taxpayers at large from being subject to this expense.

Growth Management

Growth management programs address the timing and sequence of development, and the adequacy of public infrastructure and services to serve new development. Florida's "top-down" planning approach depends heavily upon growth management concepts.

Growth management refers to a community's use of a wide range of techniques to determine the amount, type and rate of development desired by the community and to direct that growth into designated areas. Growth management policies can be implemented through future land use planning, zoning, capital improvement programming, adequate public facilities ordinances, urban service areas, urban growth boundaries, level of service standards and other programs.

In *Golden v Planning Board of Town of Ramapo (1972) (see insert),* the US Supreme Court held that local governments may condition development approval on the provision of public services and facilities. Notably, the Town of Ramapo based its program on a comprehensive plan and an 18 year capital improvement program designed to provide infrastructure throughout the community.

As discussed above, the regulatory "takings" issue is critical in growth management programs. A "takings" issue may arise when a growth management program temporarily delays development. The US Supreme Court addressed this issue in *Tahoe-Sierra Preservation Council v Tahoe Regional Planning Agency (2002) (see insert),* holding that a delay in development during a moratorium is not a categorical *per se* taking. However, it left open the possibility that a moratorium could be a regulatory taking as applied to individual circumstances.

The preservation of lands for future public use, such as transportation corridors and greenways, while critically important for effective growth management, are especially problematic. Like moratoria, an official map, for example, can present an "as-applied" takings problem if a landowner is not able to make any use of the property for a period of time. But also like moratoria, if properly done,

official maps can be a useful tool for controlling growth. The Florida Supreme Court in *Palm Beach County v Wright (see insert)* held that an unrecorded county thoroughfare plan adopted as part of a mandatory county plan was not a facial taking, even though it prohibited all development in a transportation corridor that would impede future highway construction. *Palm Beach County* suggests that a corridor preservation law may withstand a "takings" challenge if it provides alternative development options that can avoid severe restrictions on development while preserving a highway corridor from damaging development.

Golden v Planning Board of Town of Ramapo
New York Court of Appeals (1972)

Facts: The Town of Ramapo adopted a growth management program deferring development in the community the community for as long as eighteen years. It implemented the program through a residential development permit system which allowed development only if adequate facilities were available. The plaintiff objected that the plan as implemented through the permit system was a taking because development could be deferred in some areas for the eighteen year growth management period.

Issue: Does a zoning ordinance which requires a special permit, only available when public facilities and services are deemed adequate, in order to subdivide property step outside of the authorized objectives of zoning enabling legislation?

Holding: The zoning ordinance is valid and its objectives are within those defined by the zoning enabling legislation.

Rationale: The court examined the effects of the scheme as a whole and its role in producing viable land use and planning policy. This ordinance provides for sequential and orderly development. The objectives of the zoning enabling legislation are as follows: secure safety, avoid undue concentrations of people and ensure adequate provision of transportation, water, sewerage, schools and parks. Based on this, the challenged ordinances are proper zoning techniques.

Plaintiffs argue that timing controls are not authorized since they prohibit subdivision without action by the Town. The Planning Board may not completely deny the right to subdivide. However, a plan is in place to ensure action by the Town. Protection from abuse of this mechanism comes from the mandatory on-going planning and development requirement.

Some properties will not be able to be developed for 18 years according to the general plan. They still are not valid as takings. Landowners are still able to put the property to some use, maybe not the most profitable one (single family residences are allowed). Reducing the value of property does not amount to confiscation unless it is unreasonable or the value is diminished to nearly nothing. These restrictions, while harsh, are not absolute. The court must assume that the Town will act on their plan. If this assumption is shown later to be unwarranted, the restrictions may be undone.

The court uses presumption of validity and cast the burden of proving invalidity to those challenging the action. Legitimate public purpose is forwarded by the ordinance as it ensures all new homes will have adequate public services. It is not exclusionary, instead it enables a cohesive community and efficient utilization of land. Population is not frozen but instead growth is maximized through efficient land use.

Palm Beach County v Wright
Florida Supreme Court (1994)

Facts: Wright claimed that a map reserving land for future road development through his property as (part of Palm Beach County's comprehensive development plan) was a taking under all circumstances. This map protected Wright's property (amongst others) from being developed with certain land uses that would later make it more difficult to and increase the cost of building out the roadway network.

Issue: Does a map which reserves land for future uses constitute a taking if the owner is denied substantially all of the economic benefits and productive use of the land?

Holding: The Supreme Court ruled that a map which reserves land for future use is not on its face unconstitutional but that such a map may make certain properties useless and thus result in individual takings. The adoption of the map was legal, but its impact on Wright's parcel could have constituted a taking under the Fifth Amendment and some Florida laws in particular circumstances.

Rationale: Each owner has the opportunity to conduct an inverse condemnation proceeding to determine if its particular circumstance is a taking. The map is constitutional in the same way that setbacks for potential roadway expansions are constitutional. However, if the filing of the map produces demonstrable loss of all economic benefit or productive use, then the owner has the right to seek just compensation at the time the map is adopted.

Due Process

Due process has two components. **Substantive due process** is the fundamental right to be free from arbitrary, capricious, and irrational legislation.

Procedural due process is the right to notice and a hearing when governmental action is taken affecting property rights.

Decisions rendered by *planning officials* must satisfy the standards of (1) substantive due process and 2) procedural due process

Legislative land use decisions by elected officials must satisfy the standards for substantive due process and procedural due process.

Quasi-judicial decisions need only satisfy the requirements of procedural due process. *Lewis v. Brown,* 409 F.3d 1271, 1273 (11th Cir. 2005).

Substantive Due Process

Substantive due process is concerned with the overall propriety of the action taken, or the limits of the "police power" in general.

Substantive due process issues involve (1) the proper exercise of the "police power", (2) the "vagueness" inquiry and (3) the "nexus" issue.

Does the regulation seek to achieve a "legitimate public purpose"?

In most cases, planning enactments seek to protect stated community values; the "object" or "purpose" of the planning effort will be deemed legitimate. For example, regulations aimed at protecting public health and water quality seek to achieve a legitimate public purpose.

Is there a rational basis to think that the means used to accomplish the lawful purpose are "reasonably related" to achieving that purpose?

Even when a stated aim is proper, courts will examine whether the means chosen are appropriate. In protecting neighborhood values, for example, a municipality might decide to require modern construction techniques and adequate storage before permitting modular housing in a community. The municipality could be challenged, however, if it assumes that modular housing is always inferior (a demonstrably false assumption), and seeks to ban modular housing or "mobile homes" to "protect the

quality of single-family neighborhoods."

While not strictly required as part of the substantive due process inquiry, it is appropriate for governments to try to balance its interests with those of the regulated property owner. The greater the public harm, up to a point, the greater the public intrusion warranted in solving the harm. The greater the intrusion on the use of the property, the closer the scrutiny required. Would a less intrusive alternative would have accomplished the same result? Is it fair to make the property owner bear the burden of solving a community problem?

Exactions-The Nexus Issue

All land use regulation must have a rational basis. There must be a logical connection between the problem the community is trying to solve and the limitation, regulation or exaction sought by municipal action.

Exactions are requirements that an individual developer provide as a part of its development, or contribute, something in relation to receiving approval of that development. Examples include a requirement to dedicate land for roadways or for a school, build a lift station, or contribute to a fund for beautification of the nearby medians of public streets. A particular type of rational basis review applies to such exactions, known as the nexus requirement. If the nexus requirement is not satisfied, as set forth in the Nollan and Dolan cases, then the exaction may be deemed to be a taking.

The "nexus" doctrine arose in a United States Supreme Court case known as *Nollan*. There, the California Coastal Commission sought to require a property owner to dedicate a beach front public walkway as a condition to a request to remodel and increase the size of a home for the expressed public purpose of protecting the ability of the public to see the ocean from the public roadways and areas landward of the Nollans' lot. The court noted that a municipality could acquire a beach front walkway at any time by condemnation. The question in the case is whether the municipality could require the owner to dedicate the walkway without compensation, based on the owner seeking a permit to remodel the house. The court's answer was

"no."

In deciding the case, the court said ***there must exist some logical connection between the problem identified, the municipal interest expressed, and the solution proposed.*** Thus, a municipality could require setbacks from side yards for safety or aesthetic reasons, because construction of a house raises both issues. But appropriation of a walkway across a back yard for public use did not solve the problem of the decreased visual access to the ocean created by construction of the house. It only contributed to solving a separate public need, i.e. a linear park along the waterfront to increase public access along the shoreline. **Since there was no connection between the purpose of the regulation and the exaction sought, the exaction could not be required no matter how important the purpose was to the community.** The question is not the importance of the public need, but the relationship between the requirement and the purpose it served.

Nollan was incomplete because it merely stated that a nexus was required without giving any indication of how close the fit must be between the legislative end and the regulatory means. The "nexus" requirement was further developed in *Dolan*. There, the municipality imposed conditions on a building permit requiring the applicant to permanently dedicate a portion of its land for storm drainage and as a pedestrian/ bicycle path. The applicant argued that the City failed to adequately justify the conditions with the required *Nollan* "nexus." The United States Supreme Court agreed with the applicant/ property owner. The court reaffirmed *Nollan*, and added that the "nexus" test also asks whether there is a **"rough proportionality"** between the condition imposed and the impact intended to be mitigated by that condition. *Dolan* required local governments to prove that there was not only a nexus between the end and the means, but also that they were roughly proportionate in scope.

It is important to note that the courts have generally not applied *Nollan* and *Dolan* to **legislative** requirements for growth to contribute to the impact of development. For example, an impact fee is de-

veloped and adopted legislatively. A study is prepared, looking at the level of service of a particular facility or service that is provided to the existing community (i.e., roads or parks) and then deriving a fee based on the cost of requiring each unit (i.e., a dwelling unit or 1000 square feet of nonresidential development) of growth to pay to receive the same level of service. Once in place, all development participates equally in paying for the system to serve growth. Such an approach is less likely to result in arbitrary, excessive or discriminatory charges, and ensures equal treatment for all development of the same type.

There must exist some logical connection (a "nexus" and a "rough proportionality") between the problem identified, the government interest, and the solution proposed.

Instead, impact fees must be justified as fees rather than unauthorized taxes. In order to show that the fee is not an unauthorized tax, local governments must demonstrate that there is a special benefit to development resulting from the payment of the fee. The courts have described this as the requirement there be a dual rational nexus: a nexus between the need for the facilities to be provided and the impact of the development on the one hand, and the expenditure of the fee revenues and the benefits that development receives on the other. See, e.g., *Contractors & Builders Ass'n of Pinellas County v. City of Dunedin*, 329 So. 2d 314 (Fla. 1976). In practice, there is not much difference. Both the exactions cases and the impact fee cases look to whether there is enough of a relationship between development's impacts and what development is being asked to do.

Procedural Due Process

The Vagueness Inquiry

Procedural due process applies to both legislative and quasi judicial governmental actions, and is satisfied by the provision of notice and a hearing, regardless of any concerns about whether the action makes sense or is effective.

An important corollary of procedural due process, particularly for legislative actions, is the vagueness doctrine, which states that any law is facially invalid if persons of "common intelligence must necessarily guess as at its meaning and differ as to its application." In other words, if the law does not plainly state its scope, persons are not put on no-

Nollan v. California Coastal Commission, 483 U.S. 825
US Supreme Court (1987)
Exactions: rational relationship

Facts: The appellants leased, with option to buy, a 504 square-foot bungalow in Ventura County which they rented to summer vacationers. In order to purchase the property, they were required to demolish the bungalow and replace it. The California Coastal Commission granted a permit to appellants to replace the structure with a larger house upon the condition that they allow the public an easement to pass across their beach, which was located between two public beaches.

Issue: Does the California Coastal Commission's condition requiring an easement for public access serve a valid public purpose and represent a proper exercise of the police power? Or is it a taking?

Holding: The regulatory purpose must have a rational nexus with the regulatory requirement. The stated rationales for requiring the easement – (a) protecting the public's ability to see the beach, assisting the public in overcoming a perceived psychological barrier to using the beach below the timeline, which is public property, and (b) preventing beach congestion – did not relate to the easement's effect, which was to enhance pedestrian access along the shoreline for those already on the beach. California's comprehensive program for providing a continuous strip of accessible beach for the public purpose may be valid, but California chose the wrong means to bring it about.

Dolan v. City of Tigard, 512 U.S. 374
US Supreme Court (1994)
Exactions: Roughly Proportionate

Facts: Florence Dolan owned a plumbing and electric supply store in the Central Business District of Tigard, Oregon. Fanno Creek runs through the southwest corner of her property, which is located on Main Street. The City enacted several requirements to implement Oregon's statewide planning goals, including an open space and bikeway requirement in the Central Business District and a drainage plan along Fanno Creek. When Dolan sought a permit to redevelop her site, the Planning Commission granted her request, subject to the following conditions: 1) dedicating the portion of her property lying within the 100 year floodplain for improvement of a storm drainage system, and 2) dedicating an additional 15 foot strip of land next to the flood plain for a bicycle/pedestrian path. Together, these conditions constrained the use of about 10% of plaintiff's property, and could be counted towards the mandatory 15% open space requirement. The drainage plan specified that costs should be shared, resting more heavily on owners along the floodplain such as Dolan, as they would benefit most from flood mitigation it provided.

Issue: Do these conditions constitute a taking? Does the *Nollan* "essential nexus" exist between the "legitimate state interest" and the permit condition exacted by the city and, if so, what is the required degree of connection between the exactions and the projected impact of the proposed development?

Holding: *Nollan* was satisfied. The Court found a legitimate public interest in the City's desire to prevent flooding and reduce traffic congestion. It also found a nexus between those interests and the conditions imposed upon the permit -- the plaintiff's expansion of her store would increase the impervious surface of the property and increase the amount of storm water runoff, and it makes sense to limit development within the floodplain. Also, a bicycle/pedestrian path may reduce traffic congestion that may be a result of the increased number of trips predicted by the new development (about 500 a day).

However, when the Court turned to look at whether the degree and nature of the exactions bore the "required relationship" to the projected impact of the project, it did not defer to the City's findings (as the Oregon Supreme Court had). Instead, the Court determined that the proper level of scrutiny in cases of this type was whether the findings presented by the city showed a "reasonable relationship", in the Court's words, a **"rough proportionality"** between the projected impact and the conditions of the permit.

"No precise mathematical calculation is required, but the city must make some sort of **individualized determination** that the required dedication is related both in nature and extent to the impact of the proposed development." The burden of proof is on the city, because the permit conditions are an adjudicative decision on whether to approve Dolan's redevelopment of her site.

tice of its potential impacts on them, and thus are not motivated to take advantage of any hearing provided to raise their concerns, or may unintentionally violate it. Vague drafting also leaves the door open to arbitrary and discriminatory enforcement. Thus, it is not only good practice to ensure that a code of ordinances is written in plain English so it is easier to administer and enforce, it is also required by the Constitution.

If a land use regulation is to be enforceable, it cannot be unconstitutionally vague. People enforcing the regulation, and those affected by it, must have a sense of the nature and extent of the regulation and the conduct it permits or prohibits. For example, a city adopted a design review ordinance that called for buildings to be "in good relationship" with the surrounding views, have "appropriate proportions" and "harmonious colors," and be "interesting." In the transition between the old town and a nearby development area, the court found the design review commission could not express the code requirements in anything other than personal preferences. As such, the code as applied to the building in question was unenforceable.

If a local government is to avoid a claim of vagueness, it must create a standard (in words and pictures, if needed) that permits those involved in the process to understand what is expected or required.

An even higher decree of clarity is demanded when the law in question threatens First Amendment or other fundamental constitutional rights.

Courts will always try to find a way to avoid the constitutional issue if possible, but in cases of vagueness, doubts are resolved in favor of the person affected by the law. Sometimes, the court can narrow the effect of a law by a clarifying interpretation, to cure a vagueness problem that appears on the face of the statute, but governments should not rely on this happening.

Procedural Due Process in Quasi-Judicial Decision Making

Procedural due process is intended to ensure

that government acts in a fundamentally fair and reasonable manner when making decisions that affect private individuals. Broad concepts like "fundamental fairness" frequently become the basis for challenging land use decisions.

Procedural due process is intended to ensure that government acts in a fundamentally fair and reasonable manner when making quasi-judicial decisions.

Essential elements to ensure fairness of a quasi-judicial hearing or decision:

- adequate notice;
- an unbiased decision-maker;
- an opportunity to be heard;
- the right to present evidence;
- prompt decision-making;
- a record of the proceeding; and
- a written decision based on the record and supported by reasons and findings of fact.

Quasi – Judicial Land Use Hearings

Most of the decisions made by *planning officials* are quasi judicial in nature. As noted in the discussion of *Snyder* above, once the decision is made on the applicable comprehensive plan policies and land use map designation, all zoning, subdivision and other decisions related to approving development on a parcel are legally considered to be quasi judicial.

The manner in which procedures and meetings are conducted and the basis for decisions are critical issues for quasi judicial land use decisions. In particular, a quasi-judicial proceeding must address the following elements if it is to withstand scrutiny under the requirements of procedural due process:

Ex Parte Communication
Substantial Competent Evidence
Conduct of the Hearing

Findings of Fact

Ex Parte Communication

An ex parte communication is a one-on-one communication between an interested party and the decisionmaker, outside the presence of the other interested parties and outside of the hearing. An example might be the developer meeting with a member of the City Council privately and outside the presence of the neighbor who opposes the development (or vice versa – the councilwoman meeting with the neighbor without the developer present). The law presumes such communications to be prejudicial, because they allow the decisionmaker to be exposed to information that may be incorrect in such a manner that other interested parties will not have a chance to correct the error before the decision is made. See, e.g., *Jennings v. Dade County*, 589 So. 2d 1337 (Fla. 3rd DCA 1991).

Ex parte communication is permissible in relation to a quasi judicial proceeding only in accordance with procedures adopted by a local government pursuant to Chapter 256, Florida Statutes. The Legislature adopted a statute that attempts to remove the *presumption of prejudice* resulting from any ex parte communication related to a quasi-judicial matter *"if the subject of the communication and the identity of the person, group or entity with whom the communication took place is disclosed and made part of the record before the final action on the matter."* If the communication is disclosed, then other parties have the chance to correct any errors or offer an alternative viewpoint, and ensure that the decision is based on correct information and full exposure to all points of view.

If your community does not have an ordinance establishing guidelines for ex parte communications during quasi-judicial proceedings, you should discuss the adoption of such an ordinance with your city or county attorney. Inappropriate actions in the realm of ex parte communication can potentially invalidate quasi-judicial decisions made by your community and, of equal importance, create an appearance of impropriety and prejudice.

Substantial Competent Evidence

In Florida, the quasi-judicial decisions made by *planning officials* are to be based on *substantial competent evidence* and must be consistent with the comprehensive plan.

One definition of competent evidence is *"evidence a reasonable mind could accept as adequate to support a conclusion"*. Competent evidence is generally testimony based on personal observation or testimony by an "expert" who has special knowledge of a relevant topic. For example, when addressing a question of traffic concurrency, the professional opinion of a traffic engineer is competent and may be relied upon as a basis for the decision. The opinion of a lay person who lives near a proposed development is not competent, and may not be relied upon. Neighbor testimony based on personal observation or on facts about which they have relevant knowledge is competent and, in some cases, critical to the decision. ("I have coffee on my porch every morning at 7:30, and consistently observe that the traffic backs up from the intersection to my driveway, a half mile away"). See, e.g., *Metropolitan Dade County v. Blumenthal*, 675 So. 2d 598 (Fla. 3d DCA 1995).

Ex Parte communication is generally not permissible in quasi judicial proceeding

Both expert and layperson witnesses must testify to the factual basis of their positions and not to their subjective preferences. Florida's courts have also established a strict standard for consistency with the comprehensive plan. Consequently, some evidence accepted as a basis for decision must have bearing on the application's consistency with the comprehensive plan. Evidence relating to specific plan requirements, such as transportation concurrency, is clearly relevant. More ethereal issues, such as how the application might affect local quality of life, may not be relevant unless the comprehensive plan has policies specifically addressing that issue.

Conduct of the Hearing

Quasi-judicial proceedings provide procedural due process protections not available in legislative proceedings. While the Florida courts have not precisely specified what is required, the basics of due process are generally accepted to include (1) notice, (2) a hearing before a neutral decision-maker, (2) presentation of evidence, (4) sworn

testimony and (5) the questioning of witnesses.

Information related to a quasi-judicial proceeding should be available in a timely manner and accessible to all the parties throughout the process. Many communities use an "application file" for this purpose. The application file is a public document that is made available to the public during business hours. The file contains a complete record of the application, including all information submitted by the applicant, all staff reports, all comments and information submitted by other parties interested in the decision, and all actions taken by reviewing or decision-making agencies.

Decisions must be based on "substantial competent evidence

In a quasi-judicial hearing before a collegial body such as a City Council, the Mayor or Chair often has a challenging task of ensuring that all parties are adequately heard in a fair and equitable manner, while facilitating an efficient hearing and avoiding repetitive testimony or public comment that is off the topic and not relevant to the criteria governing the decision. While the Chair should adhere to established procedure, he or she does not have to be rigid. Rather, the hearing should be sufficiently flexible to provide a fair hearing for all parties, including lay persons who may be new to the land use process.

Uniform time limits for general comment are permissible, but the applicant, local government planning staff, and any other persons who demonstrate that they are affected parties and wish to provide evidence should be provided sufficient time to put on their case.

Although there may be some debate and the cases are not conclusive, most attorneys agree that constitutional due process requires the swearing of witnesses. Consequently, most local governments follow this practice. A mass swearing of witnesses at the beginning of the hearing will suffice.

The Florida Supreme Court has also ruled that, in a quasi judicial hearing, all affected parties must be "given a fair opportunity to be heard in accord with the basic requirements of due process, including the right to present evidence and to cross-examine witnesses, and the judgment of the agency or board should be contingent upon the showing

made at the hearing." Hearings should be conducted to ensure that cross examination of witnesses is controlled and that the public is not discouraged from testifying while ensuring that all affected parties, as well as the decision-makers, have the opportunity to bring out and explore all relevant facts and testimony. Some communities require all questioning to be through the Chair of the proceedings, in order to assure that it does not become abusive.

Findings of Fact

The Florida courts do not specifically require "findings of fact" to be included in the record of every quasi-judicial decision. However, because quasi-judicial decisions must be based on substantial competent evidence and will be reviewed for strict compliance with the comprehensive plan, *Snyder* suggests that after-the-fact rationales may not be persuasive to a reviewing court. To assist applicants, interested persons and reviewing courts in determining the factual basis for a decision, the basis for the quasi-judicial decision should be clearly established at a public hearing.

Very often, this is accomplished by moving approval or denial of the item in accordance with the staff report and recommendation, which should contain within it the relevant facts and legal standards for making the decision and may also provide a professional planning recommendation to support the action.

If there is no staff report or the decision maker disagrees with the staff report, then the motion and explanation of the action must be more extensive and provide a proper factual and legal basis, on which the local government can rely in defending its action in court if needed. Such a basis may be found in evidence offered by the applicant or a third party such as an environmental or neighbor group, or in the decision maker's own analysis and interpretation of the facts and legal standards before it at the hearing.

In any case, it is very important to ensure that any relevant commitments by the developer are reflected in the conditions of approval, so that the decision maker does not rely on an oral represen-

tation and later find, to its disappointment, that it is unenforceable.

Quasi judicial proceedings provide due process protections not available in legislative proceedings. While the Florida courts have not precisely specified what is required, the basics of due process are generally accepted to include (1) notice, (2) a hearing before a neutral decision-maker, (3) presentation of evidence, (4) sworn testimony and (5) the questioning of witnesses

Decisions made by Planning Officials should be documented and supported by "findings of fact"

Chapter Three - The Ethics of Planning

Ethics is a set of principles or values that govern the actions of an individual or a group. The principles must be commonly accepted by the group, coherently expressed, and uniformly applied if the group wishes to act in an ethically responsible manner.

Ethics is a set of principles or values that govern the actions of an individual or a group. The principles must be commonly accepted by the group, coherently expressed, and uniformly applied if the group wishes to act in an ethically responsible manner.

Why Ethics Is Important for the Planning Official

Serving as a planning official requires treating the office as a public trust. Planning officials have been given public authority and must use that authority with integrity and honor. Today, planning officials have a special role in the political process and want to know how to do the right thing in the context of that role. However, it is not always clear what the right thing is, and sometimes doing the right thing entails risk to one's position as a planning official.

Serving as a planning official is *a public trust.*

While no single, absolute set of rules has emerged to guide planning officials in dispatching their sometimes difficult duties, consensus has emerged on the purpose of planning – to serve the broad interests of the community in developing thoughtfully into the future. This chapter explores the various rules, statutes and codes that serve as a guide for ethical conduct.

Conduct of the Planning Official

As a *planning official* - you are a public official. As such your actions are sure to be under scrutiny by members of the public and by your local media. A misstep in how you deal with ethical issues has the potential to flare up into controversy.

Financial Disclosure

Local officers are required by statute to disclose their financial interests and clients they represent before public agencies. The term *local officer* specifically in-

cludes those persons serving on *(1)* A board having the power to enforce local code provisions and (2) a planning or zoning board, board of adjustment, board of appeals, or other board having the power to recommend, create, or modify land planning or zoning within the political subdivision.

Planning officials are required by state law to disclose financial interests and clients represented before agencies.

Each state or local officer who is appointed and each specified state employee who is employed shall file a statement of financial interests within 30 days from the date of appointment.

Each state or local officer and each specified state employee shall file a statement of financial interests no later than July 1 of each year.

Your city or county should have an established procedure for properly filing the necessary disclosure documents. Check with your planning director or attorney if you have questions.

Florida's Government in the Sunshine Law

Florida's "Sunshine Law" provides a right of access to public proceedings. _Planning officials_ are subject to the Sunshine Law.

Florida's Sunshine Law provides a right of access to governmental proceedings at both the state and local levels. The law is equally applicable to elected and appointed boards and has been applied to any gathering of two or more members of the same board to discuss some matter which will come before that board for action.

The three basic requirements are:

The Sunshine Law requires that meetings be open to the public, reasonable notice is given and minutes are taken.

1. meetings of public boards or commissions must be open to the public;
2. reasonable notice of such meetings must be given; and
3. minutes of the meetings must be taken.

Are all public agencies subject to the Sunshine Law? The Sunshine Law applies to "any board or commission of any state agency or authority or any agency or authority of any county, municipal corporation, or political subdivision." Florida courts have stated that it was the Legislature's intent to extend application of the Sunshine Law so as to bind "every board or commission of the state, or of any county or political subdivision over which it has dominion and control.

Are advisory boards which make recommendations or

committees established for fact-finding only subject to the Sunshine Law? Advisory boards whose powers are limited to making recommendations to a public agency and which possess no authority to bind that agency in any way are subject to the Sunshine Law. There is no "government by delegation" exception to the Sunshine Law, and public agencies may not avoid their responsibilities or conduct the public's business in secret by use of an alter ego.

Presume that any action you may take as a *planning official* is subject to the Sunshine Law

This definition clearly extends to all boards and commissions – state, regional and local – engaged in planning decisions. If you – as a *planning official* – have any doubt about the application of the Sunshine Law, the following steps are recommended:

- Presume that your action is subject to the Sunshine Law
- Seek legal advice from your city or county attorney
- If any doubt remains, presume that your action is subject to the Sunshine Law

After all, government-in-the-sunshine is not only required by Florida law – it is good public policy

Public Records

Every person has the right to inspect any public record made in connection with public business.

The citizen's access to public records is established by the Florida State Constitution. *"Every person has the right to inspect or copy any public record made or received in connection with the official business of any public body, officer, or employee of the state, or persons acting on their behalf,"*

"All meetings of any collegial public body of the executive branch of state government or of any collegial public body of a county, municipality, school district, or special district, at which official acts are to be taken or at which public business of such body is to be transacted or discussed, shall be open and noticed to the public"

"The legislature shall enact laws governing the enforcement of this section, including the maintenance, control, destruction, disposal, and disposition of records made public by this section"

What materials are "public record"? The state statutes define "public records" as: *"all documents, papers, letters, maps, books, tapes photographs, films, sound re-*

cordings, data processing software, or other material, regardless of the physical form, characteristics, or means of transmission, made or received pursuant to law or ordinance or in connection with official business by any agency."

The term "public record" is not limited to traditional written documents. Also as technology changes, the means by which public agencies communicate, manage, and store information, public records will take on increasingly different forms. Yet the comprehensive scope of the term "public records" will continue to make the information open to inspection.

When are notes or nonfinal drafts of agency proposals considered "public records"? There is no "unfinished business" exception to the public inspection and copying requirements established by state statute. If the purpose of a document prepared in connection with the official business of a public agency is to perpetuate, communicate, or formalize knowledge, then it is a public record regardless of whether it is in a final form or the ultimate product of an agency.

Treat all materials as a "public record". Seek advice to understand the procedures used by your jurisdiction for the handling of public records.

Accordingly, any agency document, however prepared, if circulated for review, comment or information, is a public record regardless of whether it is an official expression of policy or marked "preliminary" or "working draft" or similar label. The fact that the records are part of a preliminary process does not detract from their essential character as public records.

It is also important to emphasize, however, that a nonfinal document need not be communicated to anyone in order to constitute a public record. So called "personal" notes are public records if they are intended to perpetuate or formalize knowledge of some type.

Accordingly, it is only those uncirculated materials which are merely preliminary or precursors to final documents, and which are not in and of themselves intended to serve as final evidence of the knowledge to be recorded, which fall outside of the definitional scope of public records.

How long should public records be kept? All agencies are required to maintain its public records in accordance with state statues and rules. The criteria for records maintenance and their eventual disposal are complex and not the responsibility
of individual officials.

Recommended guidelines for planning officials regarding public records

- Assume all communication related to your job as a *planning official* is a "public record"
- Encourage your agency to develop clear policies and procedures for the handling of public records.
- Do not destroy any record that may be deemed a public record
- Seek legal advice from your city or county attorney.

Ex Parte Communication

Ex parte contacts are those communications that occur outside the public forum. The literal meaning of the term "ex parte" is "one-sided." This, of course, suggests that when you engage in an ex-parte contact, you are engaging in a one sided discussion, without providing the other side an opportunity to respond and state their case.

Ex parte communications are generally not allowed in quasi judicial proceedings. In 1991, the Third District Court of Appeals in *Jennings vs. Dade County* held that communications between a party to a pending development proposal and an official who will be voting on the proposal can invalidate the subsequent decision. In 1993, the Florida Supreme Court in the *Snyder vs Board of County Commissioners of Brevard County* prohibited individuals from lobbying local officials on petitions regarding "quasi-judicial" decisions. The Court included zoning changes affecting specific parcels, conditional uses and variances in this definition but did not extend this prohibition to large-scale, jurisdiction-wide rezonings that involve policy making on a general scale.

Ex parte communication presents a dilemma for the *planning official*. The best advice is to avoid such contacts.

Nonetheless, ex parte contacts are permissible in Florida. In 1995, the Florida Legislature authorized local governments to adopt ordinances that permit lobbying so long as the lobbying is disclosed in the public hearing and the opponents have an opportunity to respond. If your community has not adopted such an ordinance, discuss it with your legal counsel. Having a clear set of rules and guidelines about ex parte communications is good public policy.

For the *planning official*, ex parte communication presents a murky legal and ethical dilemma and one that

will frequently and continuously present itself.

While no one is asking you to abandon your values, beliefs, and political orientations when you become a planning official, you are accepting allegiance to certain principles that transcend your personal political beliefs and these principles have clear ethical and legal implications.

When you agree to serve on a planning commission or board you accept the obligation to treat all persons fairly, even if those persons happen to have radically different viewpoints than you.

Clearly there is a benefit in public knowledge of matters before the planning commission. However, you should not provide certain information to one group while withholding it from another, or selectively encourage participation only by those who share your views.

A local government may adopt an ordinance establishing a process to disclose ex parte communications related to quasi judicial proceedings.

While there is nothing wrong with your encouraging public participation, it is often best, if you have a planning director or staff planner, that they be the ones principally responsible for ensuring that all segments of the community are aware of pending or future items that may be of interest.

Is there a problem with your working behind the scenes to assist certain groups or individuals on matters pending before the commission? In a word, yes. Invariably that involvement comes out, often in the form of rumors and innuendo. A commissioner's greatest asset is credibility; once damaged, that credibility may be impossible to restore.

An even more serious problem raised when a commissioner becomes a "behind the scenes" advocate is that it implies that the commissioner has taken a position on a particular issue before it has been aired through the public hearing or review process.

From a due process standpoint, planning commissions must provide equal access to information to all interested parties. If you are going to consider information in making a decision, then that information must be in the public realm, so that anyone has the opportunity to agree or dispute it.

The concern is more with the appearance of impropriety. The integrity of your commission is paramount, and it does not take much for that integrity to be damaged.

Another mistake is to accept something as confidential information. Planning officials are, in fact, public officials. Any public official, including those serving on commissions, should as a general rule consider information provided to them to be public information. If information you obtained through a confidential discussion ends up having relevance to a public matter before the commission, you will have an ethical obligation to disclose it.

Politely, Say *"No"*

Don't discuss a case privately and as a single member of a body with an applicant or objector prior to the filing and prior to the hearing if it can be politely avoided. In the event that it is not avoidable, and many times it is not, be very non-committal, ... explain that you are only one member of the body, that you have not had an opportunity to study the matter thoroughly, that you have not seen the staff recommendation, and that you have no way of knowing what opposition there may develop or what will occur at the public hearing.

Be certain that the person concerned understands that you cannot commit yourself in any manner, except to assure him that he may expect a fair and impartial hearing.

Conflict of Interest

Conflict of interest questions are part of the larger due process consideration of the impartiality of the planning board or commission. Simply stated, every party before your board is entitled to a fair hearing and decision, free from bias or favor. Having a conflict of interest can threaten that impartiality. Therefore, it is critical that conflicts be identified and dealt with in an appropriate manner.

The issue of conflicts of interest is particularly acute when a planning official has an interest in developable real estate. While none of us like to think that we have given up some right by agreeing to serve on the planning board, the most sensitive ethical area involves a perception that a planning board member is acting in a way to advance his own interests in private property development.

Florida's statute defines a conflict of interest and tells you what to do about it:

In Florida, a conflict of interest exists if a special private gain or loss would inure to the planning official, a relative or a business associate

"No county, municipal, or other local public officer shall vote in an official capacity upon any measure which would inure to his or her special private gain or loss.... or .... would inure to the special private gain or loss of any principal (including corporate) by whom he or she is retained .....or ... would inure to the special private gain or loss of a relative or business associate ..... "

I think I have a conflict of interest. What do I do?

- **Acknowledge the potential conflict (When in Doubt, Disclose).** If you have any question or unease about a potential conflict of interest, do not hesitate to disclose it.
- **Seek a legal opinion (city or county attorney).** Your first and best point of inquiry about a conflict of interest is your city or county attorney.
- **If a conflict exists, publicly acknowledge it as required by statute.** *"Such public officer shall, prior to the vote being taken, publicly state to the assembly the nature of the officer's interest in the matter from which he or she is abstaining from voting and, within 15 days after the vote occurs, disclose the nature of his or her interest as a public record in a memorandum filed with the person responsible for recording the minutes of the meeting, who shall incorporate the memorandum in the minutes."*
- **Disqualify Yourself.** Don't fail to disqualify yourself if you have a conflict of interest under Florida law. Conversely, as a public official, you are expected to participate meet your responsibility as a decision-making and to vote except when a conflict of interest as defined by Florida law exists. That is why it is important that you consult your city or county attorney when in doubt.
- **Abstain from voting.** If a conflict of interest exists, you cannot cast a vote.
- **Do not participate in the discussion (leave the room).** Out of sight, out of mind. Continuing to sit silently with the commission or even moving to the audience is not good enough.
- **Err on the Side of Caution.** If you have any reason to believe that you have a conflict of interest, do not hesitate to consult your legal counsel.

And do it well before the item comes before your commission or board for review. You want to be the one who raises the conflict – not an applicant or effected citizen.

American Institute of Certified Planners Code of Ethics and Professional Conduct

Professional planners, subscribe to AICP's Code of Ethics and Professional Conduct. Highlights of the code are outlined below (see Appendix C for the full text)

Conflicts of Interest are serious matters. Err on the side of caution in disclosing potential conflicts of interest.

The principles to which professional planners subscribe derive from the special responsibility of the profession to serve the public interest with compassion for the welfare of all people and an obligation to act with high integrity.

As the basic values of society can come into competition with each other, so can the aspirational principles espoused under this Code. An ethical judgment often requires a conscientious balancing, based on the facts and context of a particular situation and on the precepts of the entire Code.

Certified Planners are also members of the American Planning Association and share in the goal of building better, more inclusive communities. Professional planners want the public to be aware of the principles by which the profession is practiced in the quest of that goal.

A: Principles to Which Professional Planners Aspire

Overall Responsibility to the Public

The planning profession's primary obligation is to serve the public interest. Allegiance is owed to a conscientiously attained concept of the public interest that is formulated through continuous and open debate. Professional planners shall strive to achieve high standards of professional integrity, proficiency, and knowledge. To comply with its obligation to the public, the profession aspires to the following principles:

a. Always be conscious of the rights of others.

b. Have special concern for the long-range consequences of present actions.

c. Pay special attention to the interrelatedness of decisions.

The AICP Code of Ethics provides a sound foundation for the conduct of the *planning official*

d. Provide timely, adequate, clear, and accurate information on planning issues to all affected persons and to governmental decision makers.

e. Give people the opportunity to have a meaningful impact on the development of plans and programs that may affect them. Participation should be broad enough to include those who lack formal organization or influence.

f. Seek social justice by working to expand choice and opportunity for all persons, recognizing a special responsibility to plan for the needs of the disadvantaged and to promote racial and economic integration. We shall urge the alteration of policies, institutions, and decisions that oppose such needs.

g. Promote excellence of design and endeavor to conserve and preserve the integrity and heritage of the natural and built environment.

The planning profession's primary obligation is to serve the public.

h. Deal fairly with all participants in the planning process. Those of us who are public officials or employees shall also deal evenhandedly with all planning process participants.

Responsibility to Clients and Employers

Certified planners owe diligent, creative, and competent performance of the work done in pursuit of a client or employer's interest. Such performance, however, shall always be consistent with faithful service to the public interest.

Professional planners shall strive to achieve high standards of professional integrity, proficiency and knowledge

a. Exercise independent professional judgment on behalf of clients and employers.

b. Accept the decisions of a client or employer concerning the objectives and nature of the professional services unless the course of action is illegal or plainly inconsistent with our primary obligation to the public interest.

c. Avoid a conflict of interest or even the appearance of a conflict of interest in accepting assignments from clients or employers.

Responsibility to the Profession and Colleagues

Certified planners shall contribute to the development

of, and respect for, the profession by improving knowledge and techniques, making work relevant to solutions of community problems, and increasing public understanding of planning activities.

a. Protect and enhance the integrity of our profession.

b. Educate the public about planning issues and their relevance to our everyday lives.

c. Describe and comment on the work and views of other professionals in a fair and professional manner.

d. Share the results of experience and research that contribute to the body of planning knowledge.

Certified planners owe diligent, creative and competent performance of work done consistent with faithful service to the public interest

e. Examine the applicability of planning theories, methods, research and practice and standards to the facts and analysis of each particular situation and do not accept the applicability of a customary solution without first establishing its appropriateness to the situation.

f. Contribute time and resources to the professional development of students, interns, beginning professionals, and other colleagues.

g. Increase the opportunities for members of underrepresented groups to become professional planners and help them advance in the profession.

h. Continue to enhance professional education and training.

i. Systematically and critically analyze ethical issues in the practice of planning.

j. Contribute time and effort to groups lacking in adequate planning resources and to voluntary professional activities.

Should Your Commission Adopt Its Own Code of Ethics?

Some planning commissions adopt their own code of ethics and conduct. The Hillsborough County City-County Planning Commission follows this practice.

Certified planners shall contribute to the development of , and respect for, the planning profession

Oath of Office
Planning Commissioner
Hillsborough County City-County Planning Commission

I, (state your name), a Planning Commission appointee of the (local government name), do solemnly swear or affirm that I will faithfully perform the duties of my appointed office, and will support and honor to the best of my ability all applicable laws of the State of Florida, Hillsborough County, (the City of name if applicable) as well as the bylaws, beliefs, vision, mission, policies, procedures, code of ethics and code of conduct of the Hillsborough County City-County Planning Commission. I hereby through this oath affirm that I will perform the duties of this public trust in a fair, equitable and ethical manner befitting the dignity and responsibilities of the office.

_____
Planning Commissioner Signature

_____
Planning Commissioner Printed Name

Sworn before me this _____ day of _____, 20__

_____ Seal
Name (Clerk of the Court or Designee

_____
Witness

Code of Ethics

Hillsborough County City-County Planning Commission

MEMBERS SHALL ETHICALLY SERVE THE PUBLIC INTEREST BY MAKING DECISIONS AND TAKING ACTIONS WHICH WILL ENHANCE THE PUBLIC HEALTH, SAFETY AND WELFARE OF THE REGION AND THE CITIZENS SERVED BY THE PLANNING COMMISSION AND BY PROMOTING PUBLIC CONFIDENCE IN THE INTEGRITY, INDEPENDENCE, ABILITY AND IMPARTIALITY OF THE PLANNING COMMISSION

1. Members shall uphold the prestige of their office and avoid impropriety and the appearance of impropriety.
2. Members shall not convey the impression that they are in a position to influence the outcome of a decision of the Planning Commission and shall not attempt to use their office to influence or sway the professional staff recommendation.
3. Members shall discharge their duties and responsibilities without favor or prejudice toward any person or group. Members shall not allow personal or business relationships to impact upon their conduct or decisions in connection with Planning Commission business and shall not lend their influence towards the advancement of personal interests or towards the advancement of the interests of friends or business associates.
4. Members shall avoid creating the appearance of impropriety by refraining from engaging in private discussions with the applicant or their representative about specific upcoming Planning Commission agenda items. If a Member receives a private written, telephonic or electronic communication about an agenda item, the Member will promptly forward the information to the Executive Director so that it may be shared with all other members. Members shall refrain from any private discussion of Planning Commission business with other Members per the requirements of Florida's Government-in-the-Sunshine Law, Chapter 286, Florida Statutes.
5. Members shall not accept or solicit a gift, loan, payment, favor, service, promise of employment or business contract, meal, transportation or anything else of value, if such thing is given with the understanding or possibility that it will influence the official action of the Member during the Planning Commission proceedings. The same standard shall apply to a gift, loan, favor, etc. for the spouse, child, relative or business partner of the Member.
6. A Member who announces or files as a candidate for public office shall resign immediately from the Planning Commission. No Member shall solicit funds from any other Member in support of any person's campaign for election for local or state public office.
7. Members shall refrain from participating in any proceeding in which their impartiality may be reasonably questioned. A Member whose personal, employment or business relationship with a person or entity that is subject to a recommendation of the Planning Commission shall seek advice and counsel of the Planning Commission Attorney, if such relationship could conceivably influence the Member's impartiality during the Planning Commission's discussion of the subject. The provisions of Chapter 112, Florida Statutes, the Code of Ethics for Public Officers and Employees, shall govern conflict of interest determinations.
8. Members shall remain vigilant against deviations from Planning Commission by-laws, policies and mission statement.

Code of Conduct

Hillsborough County City-County Planning Commission

RECOGNIZING THAT PERSONS HOLDING A POSITION OF PUBLIC TRUST ARE UNDER CONSTANT OBSERVATION, AND RECOGNIZING THAT MAINTAINING THE INTEGRITY AND DIGNITY OF THE PUBLIC OFFICE IS ESSENTIAL FOR MAINTAINING HIGH LEVELS OF PUBLIC CONFIDENCE ON OUR INSTITUTIONS OF GOVERNMENT, EVERY MEMBER OF THE PLANNING COMMISSION PLEDGES TO ADHERE TO THE FOLLOWING

CODE OF CONDUCT

1. Regularly attend all scheduled meetings of the Planning Commission as well as special or called meetings relevant to the office.
2. Prepare for each meeting.
3. Create a positive environment in meetings of the Planning Commission.
4. Maintain an attitude of courtesy and consideration toward colleagues, citizens and staff during all discussions and deliberations.
5. Allow citizens, colleagues and staff sufficient opportunity to present their views, within the prescribed rules for conduct of meetings of the Planning Commission.
6. Avoid the use of abusive, threatening or intimidating language or gestures directed at colleagues, citizens or staff.
7. Avoid comments, body language or distracting activity that conveys a message of disrespect and lack of interest.
8. Respect all local, state and federal laws, rules and other regulations.
9. Submit completed financial disclosure forms to the Hillsborough County Supervisor of Elections by the specified deadline.
10. Publicly acknowledge the adopted position when asked about a decision of the Planning Commission.

The performance of the Planning Commission and Planning Commissioners in meeting this Code of Conduct is affirmed by the following signatures:

_____	_____
Name	Name
_____	_____
Name	Name

Chapter Four - Making Planning Work

Effective Planning Officials

As a *planning official,* there are techniques and practices that will make you more effective:

- **Roll up your sleeves.** Being an effective *planning official* is hard work. Get to know your comprehensive plan and your land development regulations. Read books and articles about planning. And take the time to know about the matters coming before you for decisions. The job of a *planning official* requires more than attendance at monthly meetings.
- **Prepare for meetings**. Public meetings are the window of planning to the community. It is in this forum that the business of planning is conducted. Spend some time to prepare for each meeting no matter how routine.
- **Take advantage of staff briefings**. The planning staff is an extension of you. They conduct the necessary analysis that serves as the foundation for your decisions. Do not miss an opportunity for staff input.
- **Listen – engage & stay on target.** Listen to all the people and not just to those who fit into a neat stereotype of "desirable citizens". It is important to give attention to everyone. Those appearing before you have probably spent hours preparing and rehearsing their arguments. You owe them your consideration. At the time, stick to the issues at hand.
- **Seek input and ask questions.** The only dumb question is the "one not asked". Ask questions at your board meetings. Don't be reluctant to ask questions of other board members and the planning staff.
- **Know the protocol for moving the meeting along.** Learn the rules that govern your meetings and do your part in creating an efficient meeting environment.

- **Check the record for accuracy.** The accuracy of records is very important to the planning process and everyone involved bears responsibility for maintaining this accuracy. Check the minutes and don't hesitate to questions apparent discrepancies in supporting material and testimony.

- **Reap dividends by getting training; travel to other cities & meet your peers.** Find out what your peers are doing in other communities. There is no subject related to planning that other communities have not encountered and taken steps to resolve.

- **Keep the "Vision" - The vision of your community belongs in the forefront of everything you do as a commissioner**. The *planning official* that understands the community's vision and is committed to achieving that vision has a *leg up* in the effectiveness category. This *sense of direction* is extraordinarily powerful as a catalyst for positive change.

Building Relationships

Planning officials work with, and independently of, a variety of groups and people. Key among them are the petitioner seeking action, the planning staff, other governmental staff or agencies, the local legislative body, official and unofficial citizen groups, individual citizens, and the courts. The relationship of the *planning official* the local legislative body and to the professional staff are discussed here.

Getting Along With the Elected Officials

The commission's relationship to the legislative body may be the most significant single reason for strong planning ethics. The legislative body is political. Legislative representatives are responsive to constituents' interests and subject to election campaigns that encourage attention to immediate concerns rather than to long range problems.

Planning commissions and boards exist independently to balance this tendency. They do so by emphasizing the long range interests of the community. Much of the work of commissions and boards is making recommendations to the legislative body that makes the final decision.

A delicate balance exists in the relationship between elected officials and their advisory boards that inevitably surrounds local land use issues. Often it is rooted in a lack

of clarity about their different roles.

A misunderstanding of roles is the most frequent barrier to a positive relationship between councils and planning boards. What are the roles? The Council begins with the responsibility of appointing the members of the Board. It is the Council's job to create a capable Board with a balance of experience and expertise. However, the Council then needs to leave the Board to do its job.

A positive and productive working relationship between the Council and the Planning Commission requires a clear understanding of their different roles, a regular communications system and a healthy understanding of, appreciation and respect for each other's jobs.

The two groups have distinctly different jobs. Elected officials are policy makers. They are elected by and are responsive to the public whom they represent in all its various constituencies. The Board members, on the other hand, are not policy makers. They are appointed to work within the policies and ordinances adopted by the legislative body. They work within already established policy and do not change policy based on public comment. Even if the room is packed with citizens arguing that a permitted use be denied in a site plan hearing, it is not the Planning Board's role to change what is or is not permitted. It is their role to apply the given ordinance. If the public does not like what the ordinance permits, then the Council is the place to get it changed. Similarly, if the Board is concerned about the impacts of applying a given ordinance, their option is to recommend changes to the Council.

Even in the process of rewriting or developing new ordinances, the Council is still the policy maker. The Board functions like a technical consultant to the Council recommending effective ways to accomplish the general community goals requested by the Council. The Council gives a sense of direction to the Board. The Board then uses its specialized background and expertise to make recommendations back to the Council. The recommendations may be creative and far reaching. They may be more complex or technically innovative than the Council ever imagined. But, it is the Council that makes the final decision with whatever political considerations it deems appropriate. Each role is vital to a smoothly functioning community. But they are separate. If the Board tries to set policy or the Council tries to interfere with the application of the ordinance or fails to value the technical advice of the Board, confusion and trouble will follow.

Effective and appropriate communication is important to a positive relationship.

When and how should the Council and the Board com-

municate? Should elected officials lobby Board members as the Board carries out its work? Should Board members consult with individual elected officials before making decisions or recommendations? Neither is likely to be helpful. There needs to be a way for the Council to provide collective guidance, rather than disjointed or individual points of view which might not represent the view of the whole. There needs to be a way for the Board to share with the Council the background and thought process that leads up to a recommendation for a zone change or a new ordinance. Although much of the work in small towns seems to get done around people's kitchen tables or in the aisles of the grocery store, clear and formal avenues of communication are important.

Some specific steps that should enhance communication:

- A yearly workshop to review and agree on roles, to discuss common community goals, and to establish the general work agenda for the year.
- A regular update letter or progress report from the Board to the Council and vice versa on issues of mutual interest.
- Facilitated joint workshops on issues that have created or have the potential to create difficulties between the two groups.
- Agreement on ground rules for joint meetings, public statements and informal workshops which include mutual respect.
- Development review processes that provide for early community input, thus reducing the likelihood of conflict.

What to Expect From Staff?

In those communities where there is a permanent planning staff or a regular consulting planner, the commission or board and the staff or consultants must work together to establish an effective framework. Citizens' first contact with the planning process will often be with the planning staff and the planning staff represents the Planning Board's primary source of information and professional advice.

Planning commissions should be staffed by individuals

who will provide them with objective analyses. Commissions help define the objectives and nature of planning work through adoption of plans, work programs, and studies. This does not mean, however, that commissioners and board members should defer to staff or minimize their own responsibility to plan. But planning officials should not steer the planning staff toward a single finding or reject conclusions that are out of sync with a common community value simply because they are unpopular.

The Planning Director and staff are the *planning official's* primary source of professional and technical support. This staff should meet high ethical and professional standards.

The planner has a responsibility to serve the public interest, particularly in terms of the long-range consequences of present actions and the interrelatedness of decisions. Serving the public interest also means striving to expand choice and opportunity for everyone. The code requires planners to establish rules and procedures that guide the operation of the planning office. This means, in a practical way, that facts should not be adjusted to meet someone's political objectives, and rules cannot be changed according to the political or social status of applicants.

Several characteristics are paramount in defining the nature of the relationship between the Planning Director and his/her staff, planning bodies, and the larger community:

- High ethical standards
- Full, clear, and accurate information.
- Independent professional judgment
- A fair and open input process
- Courtesy, frankness, forthrightness, responsiveness, accountability
- Work program
- Standard Operating Procedures
- Informal retreats or scoping meetings

Engaging the Public

What is Citizen Participation?

Citizen participation in community affairs is as old as democracy and is an indispensable element of any effective planning program.

Citizen participation in local government involves the people, in some fashion, in land use decisions. The traditional roots of contemporary participation are found in the town hall form of direct democracy. The fundamental justification for citizen participation is the prem-

ise that people have a right to participate in decisions that affect them.

Citizen participation means different things to different people. Some view it as the task of electing representatives and voting on specific issues. Others define it as having an active voice in influencing local government decisions.

In planning activities citizens can testify at a public hearing; attend a workshop to create goals for the community comprehensive plan; serve a term on the planning commission; or answer a public opinion survey to identify community planning priorities. In other words, citizen participation in local government involves the people, in some fashion, in land use decisions.

Citizen participation is an indispensable element of an effective planning program. People have a right to participate in decisions that affect them.

Citizen participation is an established part of the land use planning and regulatory process in Florida. State planning laws require citizen participation through public hearing before plans or regulations are adopted, or before granting land development permits. Chapter 163.3181 F.S. states:

It is the intent of the Legislature that the public participate in the comprehensive planning process to the fullest extent possible. ..... local planning agencies and local governmental units are directed to adopt procedures designed to provide effective public participation in the comprehensive planning process and to provide real property owners with notice of all official actions which will regulate the use of their property.

..... ***the procedures shall provide for broad dissemination of the proposals and alternatives, opportunity for written comments, public hearings as provided herein, provisions for open discussion, communications programs, information services, and consideration of and response to public comments.***

Rule 9J-5 FAC expands on the requirement for citizen participation. The local governing body and the local planning agency must adopt procedures to :

...provide for and encourage public participation in the planning process .....

The procedures shall include the following:

(a) ***Provisions to assure that real property owners are put on notice****, through advertisement in a newspaper of general circulation in the area or other method adopted by the local government, of official actions that will affect the use of their property;*
(b) Provisions ***for notice to keep the general public informed****;*

(c) Provisions to assure that there are ***opportunities*** *for the* ***public to provide written comments****;*

(d) Provisions to assure that the ***required public hearings are held****; and*

(e) Provisions to assure ***the consideration of and response to public comments****.*

Florida's planning and growth management laws mandate citizen participation.

Local governments are encouraged to make executive summaries of comprehensive plans available to the general public and should, while the planning process is ongoing, release information at regular intervals to keep its citizenry apprised of planning activities.

These requirements provide overall guidance, but leave local governments free to tailor a more detailed definition of citizen participation to fit community needs.

Community Visioning

Local governments are encouraged to develop a community vision that:

- provides for sustainable growth;
- recognizes its fiscal constraints; and
- protects its natural resources.

The 2005 Florida Legislature provided incentives for local governments to develop a community vision and to incorporate this vision into its comprehensive plan. Under the statute, a local government that has adopted a community vision and urban service boundary may subsequently adopt plan amendments without state or regional review.

To avail itself of this streamlined amendment process, a local government must develop its community vision in accordance with certain rules of procedure and must address key issues identified by the legislation. Most

Local governments are encouraged to develop a community vision that provides for sustainable growth, recognizes its fiscal constraints; and protects its natural resources.

notably, the process must involve stakeholder groups such as neighborhood associations, community organizations, businesses, private property owners, housing and development interests, and environmental organizations.

In preparing the community vision, the local government must, at a minimum, discuss at least five of the following topics:

- future growth in the area using population forecasts from the Bureau of Economic and Business Research;
- priorities for economic development;
- preservation of open space, environmentally sensitive lands, and agricultural lands;
- appropriate areas and standards for mixed-use development;
- appropriate areas and standards for high-density commercial and residential development;
- appropriate areas and standards for economic development opportunities and employment centers;
- provisions for adequate workforce housing;
- an efficient, interconnected multimodal transportation system; and
- land use patterns that accommodate the above elements.

The local government must discuss strategies for addressing the key issues:

- strategies to preserve open space and environmentally sensitive lands, and to encourage a healthy agricultural economy, including innovative planning and development strategies, such as the transfer of development rights;
- incentives for mixed-use development, including increased
- height and intensity standards for buildings that provide residential use in combination with office or commercial space;
- incentives for workforce housing;
- designation of an urban service boundary; and
- strategies to provide mobility within the community and to protect the Strategic Intermodal System.

And finally, the community vision must reflect the community's shared concept for growth and development of the community, including visual representations depicting the desired land-use patterns and character of

the community during a 10-year planning timeframe. The community vision must also take into consideration economic viability of the vision and private property interests.

Who Should Be Involved?

State planning laws and local ordinances spell out the need to involve elected and appointed officials closely in local land use planning. A broad range of citizen groups and committed individuals must also be involved.

The public decision-making process involves three distinct groups:

- **Decision-makers**
- **Stakeholders**
- **Experts**
-

The public decision making process involves three groups: (1) decision-makers, (2) stakeholders and (3) experts. Each plays a distinct and essential role.

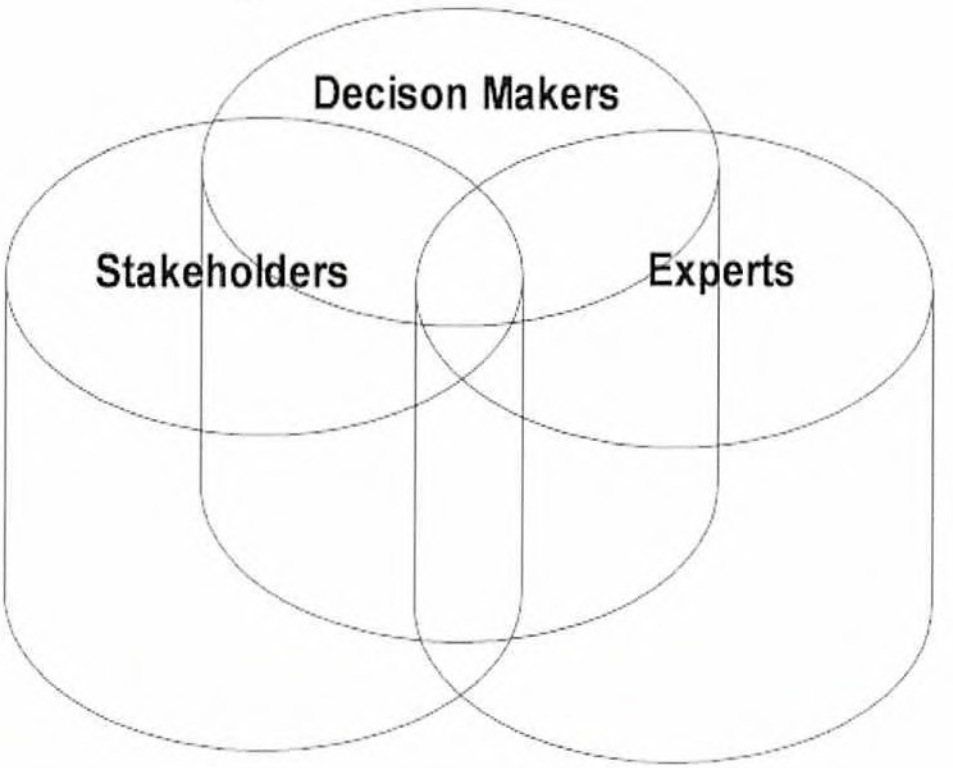

Decision makers include the elected and appointed officials who render the final decisions of planning matters. *Planning officials* - by definition – comprise this group.

City councils and boards of county commissioners set policy, make final decisions on plans and land development permits, adopt ordinances, approve budgets for planning, and appoint members of the planning commissions and boards.

Planning officials are volunteer citizens with a responsibility to review plans and projects. They may not make final decisions, but typically must make recommendations before elected officials can adopt comprehensive plans. Planning commissioners are non-partisan appointed officials who represent the general values of the community in land use decision making. They also serve as a sounding board for new ideas, promote community interest in planning, and furnish leadership in formal citizen participation programs.

Planning board members may make final decisions on quasi judicial decisions. Actions on special uses, appeals from administrative decisions, interpretations and variances often are delegated to such bodies.

Stakeholders include nearly everyone outside this formal structure who could be involved in the land use planning process. Citizens in a community are not a single homogeneous entity. They represent a broad spectrum of ideas and opinions, often with conflicting goals and values. The "citizens" are a diverse collection of individuals and groups: neighborhood associations; public interest groups, such as the local chapter of the Sierra Club; or special interest groups like the local chamber of commerce.

Experts include professional planners, engineers, attorneys and other specialists who provide advice, analysis, research and evidence to support the planning process.

Many cities and counties in Florida have a professional planning staff that brings technical expertise and knowledge to the planning process. In smaller communities without professional staff, consultants sometimes are hired to provide technical assistance. Historically, the planning staff serves as advisers to planning officials and planning commissions.

They conduct studies, administer planning regulations

and are a resource for the public on land use planning activities.

Expert input also is frequently offered by the staffs of governmental agencies especially in the comprehensive planning process and during the development review for large scale projects. For example, transportation specialists representing regional and state interests often supply traffic analysis and transportation impact projections. Testimony regarding water and environmental issues is frequently provided by the water management districts and the input of school districts is often routinely included in the background information available to the decision-makers.

Consultants are also frequent participants in the planning process and across a broad range of issues. Consultants are sometimes employed by government but most frequently enter the planning process on behalf of stakeholders.

Citizen Involvement: A Matter of Timing

As a general rule – the earlier citizen participation occurs in the process – the better

No matter when officials invite or recruit citizen participation in land use planning, it will not be soon enough for some interest groups. Others will complain that participation is starting too early. Controversy over the topic of when to invite or recruit citizen involvement can only be settled by local officials.

Citizen mistrust, or lack of support for plans and projects, often has more to do with a lack of opportunity to participate early in the project than on its merits.

Citizen Participation in the earliest stages of planning will save time in the long run. The longer participation is put off, especially in major planning or development issues, the more likely that rumor and misinformation will spread. When this happens, officials spend more time explaining what is not true than reviewing the pros and cons of the project.

Another good reason for early participation is to identify disagreements or conflicts. Conflicts are abundant in land use planning. A healthy airing of conflicting views early on encourages creative problem solving and productive conflict management. Delaying citizen participation does not reduce or avoid conflicts. Conflict can cause poor utilization of resources, delay important planning efforts, and result in the loss of desirable development projects.

Successful citizen participation involves (1)public information and (2) interaction

Methods for Encouraging Citizen Participation

Citizen participation must be carefully planned and organized. Activities should be simple, straightforward, and manageable by officials, planning commissioners and staff; and designed to fit local values and available resources.

The extent and intensity of any participation activity should match the importance of the issue. Widespread participation is desirable when comprehensive plans or land development ordinances are being created or updated. Participation efforts can be on a smaller scale if the issue mainly interests a particular neighborhood or area.

The best that can be done in any community is to see that citizen participation activities are open and accessible to anyone who wishes to be involved; that they do not require citizens to have special technical knowledge; and that there are clear lines of responsibility and accountability.

Two methods are key to successful citizen participation: **public information** and **interaction**. Public information methods are a time-honored way to inform citizens about land use plans and projects. Interactive methods create a dialog between citizens, elected and appointed officials, and professionals.

Creating an Effective Citizen Participation Program

Does your organization have a citizen participation strategy or program? Is citizen participation given considerable time and thought or is it something that just happens because someone scheduled a meeting? If you don't have such a strategy or program, **talk to your planning director** about creating one. Here are some simple guidelines you might follow:

Determine Objectives of the participation program. Write them down, in plain English, so everyone can understand the purpose of the program. In most cases you will have multiple objectives. For example, the citizen participation program for developing a "vision" or updating a "comprehensive plan may be quite different than that required for the review of a major land development.

Identify Who Should Be Involved by identifying

who will be impacted by the plan, ordinance, or project. These are the citizens who need an invitation to participate.

Decide When to Invite / Recruit Citizen Involvement. This step must be consistent with Step 1. For example, if the objective is to have citizens develop initial ideas for plans, people must be involved at the beginning of the process. If the objective is to have people review and comment, it will not be necessary to plan for involvement until draft proposals are available.

Identify and Evaluate a Variety of Methods that are appropriate to carry out the program objectives. Typical evaluation criteria are: the cost of the method; the ability of staff (volunteer and professional) to administer the method; the amount of time needed by citizens; the amount of time needed by staff to process data generated; and the quality of that data.

Effective citizen Participation programs do not simply happen. They are the result of thought and deliberate action with clear objectives in mind.

Select the Best Methods to achieve each program objective. Be sure they are within the resource capabilities, both financial and human, of the community.

Carry Out the citizen participation program.

Evaluate the Program when it has been completed. Decide if objectives have been met, list what went well and what could be changed or improved.

Public Information

Citizens need to be informed about land development plans and projects, and armed with the facts they need to participate constructively. Citizens must also be informed of specific opportunities for involvement and how their participation will influence land use decisions. Public information methods reach large audiences, stimulate interest in community planning, announce citizen participation activities and events provide notice of public hearings, and inform the public of actions and decisions.

The best way to select public information tools is to **identify the objective and audience to be informed**, and **choose the methods based on skills and available budget**. Local planning agencies should include **funding for public information activities** in their yearly budgets.

Planning agencies need to let their citizens know what they are doing. A systematic approach to this task may

contain the following elements.

Publish – Plans, studies and reports should be made available to the public. Make these reports available at cost and open for review in public places such as city hall and the public library. Prepare summaries for widespread distribution. Take advantage of technology such as electronic mail or Compact Disks (CD) for the distribution of large volume reports at low cost. Publish your comprehensive plan and land development code on a CD.

Planning agencies need to provide timely, relevant and accurate information to the public. Advances in technology have made this task much more cost-effective.

Websites – Almost all communities – even small ones – have websites. Websites provide an excellent way to publish important information and to keep it current. If your community doesn't have a website – lobby for one. If they have a website, make sure planning is well represented. Publish your agendas and your minutes on the website.

Television – Many Florida communities televise public meetings. If planning meetings are not being televised – lobby to have them televised. A juicy zoning controversy can compete with "Judge Judy" any day!). Video tape your meetings even if they are not televised live. These recordings make for invaluable records of the proceedings and can be used later in a variety of ways.

Interactive methods encourage two-way communication and innovative solutions. All of these methods create a dialog among decision makers and stakeholders

• **Ask the Media for Help –** Feature stories, editorials, news coverage and public service messages are all methods for communication through the media. Invite the media to cover planning issues but remember that you must be open and accessible and be willing to accept both favorable and unfavorable coverage.

Citizen Interaction

If citizen participation is to be effective and not simply "window-dressing" people need opportunities to:

- clarify values and attitudes
- express their opinions and priorities
- create proposals for plans and projects
- develop alternative approaches
- resolve conflict

Interactive methods encourage two-way communication and innovative solutions. All of these methods create a dialog among decision makers, experts and stakeholders who will be affected by those decisions. Some interactive methods, such as public meetings

and workshops, are effective throughout a planning process. Others, like surveys, are best limited to specific steps. Interactive methods most frequently used in Florida are public meetings and hearings, community workshops and community surveys.

Public Meetings

The public meeting is the forum where planning officials most frequently interact with the public. Designed to inform, educate, or facilitate extensive interaction and dialogue, public meetings are a widely used form of citizen participation. Information and educational meetings are a valid first step in any citizen participation process. Technical information can be distributed, along with an orientation to citizen participation opportunities and general or detailed descriptions of plans and projects.

Problems can occur when the purpose of a public meeting is not clearly stated. Citizens become frustrated and angry if they attend a meeting believing they will be able to express their views, only to discover that the meeting was designed to educate or inform them about plans or projects. The purpose of a public meeting must be announced openly and honestly in pre-meeting publicity.

Preparing For Public Meetings

Proper preparation for public meetings and workshops goes a long way toward ensuring their success. Here are a few important tips.

- Tell people the purpose of the meeting
- Have a written agenda.
- Make sure that the meeting date and time is convenient for the people who are being asked to attend.
- Notify people well in advance, approximately one to two weeks before the meeting date.
- The meeting site should be easy to get to, serviced by public transportation, and have ample parking.
- Select a meeting room that is appropriate for the size of the expected audience. Avoid rooms with pillars, other structural supports, and fixed seats.
- Make certain there is adequate lighting, ventilation, and a comfortable room temperature.
- Assure that people will be able to hear speakers and converse in small groups.

The public meeting is the forum where planning officials most frequently interact with the public

Proper preparation for public meetings goes a long way toward ensuring their success

Managing the Agenda.

All planning boards and commissions have some form of agenda. By treating it seriously, you will find it is an important tool toward orderly and productive meetings.

Who sets the agenda for your planning board meetings? How are decisions made about the order, public comment, and other important matters? Do you allot specific times or just go with the flow? In other words, does your agenda work for you as well as it should?

If your planning board uses its agenda as a tool to efficient and productive meetings, these questions may seem elementary and even trivial. But if you are one of many whose agenda is either inadequate or even an impediment to effective meetings, it may be wise to consider how it can be improved.

The agenda is the template for your meetings. It should be developed thoughtfully so that the planning board has adequate time for matters that require attention and/or decisions and less time for "housekeeping" or more routine subjects. It should delineate plainly when public comment is invited and the actions expected of each item (review only; action; referral, etc.).

Many commissions leave the agenda writing to staff and may see it for the first time when they come to the meeting. This does not serve you or the public well. The best approach is for the chair, or a committee of your board, to review the agenda before it is final and for commissioners to receive it and any backup materials several days in advance. Upcoming meeting agendas should also be posted in public places, such as public libraries and town or city halls. A growing number of communities also are posting agendas on their Web sites.

Allow ample and early time for issues which most concern the public. Too often, planners put them last or next to last on the agenda even though they are well aware of one or more matters certain to attract a big crowd. People get restless and cranky if they have to sit through several hours of deliberations that do not concern them. Put the contentious or controversial issues on the agenda early, and give them the time they deserve. Do not be offended if most of the crowd leaves as soon as you turn to other matters.

- Consider setting aside a general comment period

The agenda is the template for your meetings. It should be treated seriously.

where people can talk to you about any planning items that concern them. Fifteen minutes at the beginning of the agenda usually is adequate and can serve as a "safety valve" for testing the pulse of the community.

- Place together routine items that require little or no discussion on the agenda and consider them in a group. Some bodies call this the "consent agenda" and require one motion and one vote to approve them all. But be careful that they are, indeed, routine items and not anything controversial you can be accused of "sneaking through."

- Print the allotted time for each item on the agenda...7-7:05, Roll Call; 7:05-15, Correspondence; 7:15-7:45, Major item # l, Public Comment, etc. ... and follow the schedule as much as you can.

- Do everything possible to make the public comfortable. Print sufficient agendas for all to have one, with the aforementioned time allotments. Also, make sure there are sufficient copies of any graphics or explanatory material.

- At the start of the meeting, ask people who wish to speak on specific agenda items to sign up. This allows the chair to control the agenda and perhaps ask the board to extend the time if it is obvious the stated comment period is not sufficient for all the people who wish to be heard.

- Make sure the agenda is written in words and phrases easily understood by the public. How long did it take you, as a layperson, before you finally understood planning jargon? If you are expecting a turnout of non-English speaking citizens, translate the agenda into one or more other languages beforehand and engage interpreters to be available at the meeting. Put yourself in the shoes of the citizen who is attending his or her first meeting.

Public Hearings

A public hearing is a special meeting which allows the public to comment on proposed plans and projects before officials make a final decision. The purpose of a public hearing is to guarantee that citizens' comments on land use issues will be heard and a public record is made. Testimony is typically given under oath.

The structure of the agenda contributes greatly to orderly and productive meetings

Operating under a set of laws and formal procedures, it is an open public meeting. All citizens must be permitted to present their views for the official record, verbally and in writing, before the hearing body makes its decision.

Public hearings are conducted by city councils, boards of county commissioners, planning commissions, and, for certain designated zoning issues, the board of adjustment. Some jurisdictions in Florida have hearings examiners who conduct quasi-judicial public hearings related to land development orders and permits.

It is in the community's best interest to see that public hearings are carefully planned. In addition to the legal aspects of conducting a hearing, the points listed below can significantly increase the productivity of public hearings.

Before a hearing takes place:

- The responsible agency should carefully examine the proposal or application to see that it is complete, and that all procedures and regulations have been followed.
- All interested parties should receive ample notice of the hearing.
- At least several working days prior to the hearing, staff reports, environmental assessments, economic analysis, and any other documents relevant to the hearing should be available for members of the hearing body and the general public. Often this timeline is established by statute, ordinance or rules of procedure.
- Printed copies of the hearing body's rules and procedures should be on hand.

Members of the hearing body need to keep a fair and open mind until all testimony is presented. Citizens should be adequately prepared to testify, know the hearing rules and procedures, have a clear statement of purpose for their testimony, and back up their statements with solid information. It is also helpful to the hearing body if citizens prepare written testimony and present only summary remarks at the hearing.

The public hearing provides proponents and opponents of land development projects an opportunity to comment. However, legally required public hearings offer

only a limited opportunity for two-way communication. They are most effective if used in combination with other citizen participation methods. Public hearings are not a very expedient method for resolving conflict and can be counter- productive if used as a method to rubber-stamp plans or projects.

Public hearings are formal meetings required by law before officials can make a final decision. Rules of procedure and the making of a public record are paramount

Community Workshops

One of the most popular citizen participation methods is the community workshop. Encouraging extensive interaction, workshops offer a structure that typically divides many people into small work groups. The value in this method is the data citizens develop in the work groups. Each small group prepares a written report, communicated at the end of the workshop to all attendees. Data developed at community workshops can be used throughout the planning process. When people see the goals, priorities, and ideas they have developed in community workshops reflected in land use decisions, they are more likely to support local government plans and projects.

Proper preparation for a public hearing is necessary if the meeting is to meet its procedural and legal requirements

Other advantages of this method are: 1) everyone can participate at meetings; 2) it is an excellent means of developing community consensus; and 3) it is relatively inexpensive. To be successful, workshop managers must have good group facilitation and data management skills.

Informal arrangements with chairs and tables for small groups are appropriate for workshops. Meeting sponsors often serve coffee, tea, or juice as a way to make people comfortable and help them become acquainted during meeting breaks. Having materials for people to look at and study prior to a meeting, and setting up audio visual equipment well in advance of me starting time are other simple ways to make meetings less stressful for organizers and participants.

Public hearings are not a very effective method for resolving conflict and can be counter- productive if used as a method to rubber stamp plans or projects

Charrettes

Charrettes are a form of community workshop that has become increasingly popular in recent years.

Charrette is a French word that means "little cart." At the leading architecture school of the 19th century in Paris, students would be assigned a tough design problem to work out under pressure of time.

They'd continue sketching as fast as they could, even as little carts *(charrettes)* carried their drawing boards away to be judged and graded.

"Charrette" has come to describe the rapid, intensive, and creative work session, usually lasting several days or more, in which a design team focuses on a particular design problem and arrives at a collaborative solution. Charrettes are product-oriented and hands-on. The public charrette is fast becoming a preferred way to face the planning challenges confronting American cities and has been widely applied in Florida.

Community workshops are an excellent means of developing community consensus. Workshops facilitate extensive interaction and are relatively inexpensive

Charrettes typically require extensive preparation. Information – both statistical and graphic – is required by the participants if a competent product is to emerge from the charrette exercise. Consequently, the process can be expensive and require a high level of facilitation for success.

Community Surveys

A citizen survey is often used to gather information about citizen attitudes, values, and priorities. It can also gather data about a community's residents, such as age, income, and employment. Surveys are not a truly interactive participation method; citizens do not communicate directly with decision makers in a survey, but they can express their opinions on land use issues. Several types of surveys are used in land use planning.

- The formal scientific survey systematically measures community attitudes, values, and priorities. Data collected by scientific surveys can statistically represent all citizens' views in a quantifiable manner. Crucial elements in a formal scientific survey are properly designed questionnaires, careful tabulation of results, and a written analysis and interpretation of the data. Survey results must be reported in a straight- forward manner and be widely distributed throughout the community. If the local government staff is not experienced in survey design and analysis, they should seek assistance.

- The community self-survey is popular in smaller communities and neighborhoods. This method makes extensive use of community volunteers with a minimum of outside assistance. Citizens organize and conduct all aspects of the survey, from developing and distributing questionnaires to tabulating and distributing results to the community. The advantages of this type of survey are that it encour-

ages broad citizen participation and it collects information about community attitudes and priorities. Conducting a community self-survey is a large undertaking. This method should be chosen only if enough volunteers are available and when the survey results are not needed immediately.

- New methods, such as interactive computer simulations, interactive websites and cable television, are being introduced in citizen participation activities. In selecting among these, communities should be open to new and innovative techniques. However, they must carefully evaluate their ability to execute a particular method. Guiding factors in making a selection are I) match the appropriate method to each citizen participation objective; and 2) have the skills and resources to carry out the method properly.

The "Charrette" is a rapid, intensive and creative work session in which a design team develops a collaborative design solution or plan. The technique is "product oriented" and "handson"

Community Image Survey

The Community Image Survey uses visual images to educate local decision-makers and stimulate public participation in the planning process. The Community Image Survey is an extremely effective- and simple-tool that promotes lively discussion and analytical thinking by residents, business owners, staff, and officials alike. Because the Survey assumes that participants have no prior knowledge of sometimes complex urban design and planning principles, the Community Image Survey effectively allows everyone, regardless of their training or knowledge about the subject, to participate fully in the process.

"**A Picture Is Worth A Thousand Words!** By focusing on concrete visual images, instead of using words like "mixed use," - "human scale," "pedestrian-friendly," "higher density," and "transit-oriented" to describe development, survey participants are able to move beyond static arguments about use and density toward useful, and often intense, discussions about the specifics of a particular place. The process of identifying what makes a place feel welcoming, exciting or unique often helps formerly divided groups find common ground.

The Community Image Survey is a set of 40 to 100 slides that can be shown at as part of a conference, workshop, community meeting or website. Survey participants are asked to look at each slide, then assign it a number value (for example -10 to +10), based on how much they like or dislike the image, and its appro-

The Community Image Survey uses visual images to educate local decision-makers and stimulate public participation in the planning process

priateness for the area. The average "score" the group has given the different images are then tabulated and the slides are roughly paired based on subject for discussion purposes.

Next comes the most interactive and interesting part of the survey process: a facilitated discussion in which everyone is asked to participate. In what is often a lively process, participants brainstorm what they like about each image, as well as what they don't like. Participants are encouraged to go beyond the obvious, to focus on identifying all of the design details that make a place feel "safe," "comfortable," and "friendly", as well as "boring", "scary", and "unremarkable. These responses are all recorded on for all participants to see, and for later use as a product of the process.

The goal of the survey process is to help people begin to see and articulate the positive and negative details in each of the images. By using slides taken from throughout a region, the Community Image Survey encourages objectivity by presenting relevant examples that may be recognizable, but are not "too close to home."

Community surveys can be used to gather information about citizen attitudes, values, and priorities

Five Principles for Effective Planning

Principle #1 Begin With The Public

Effective planning can only be achieved if there is "ownership" by the community. This objective requires a commitment to public involvement.

PRINCIPLE #1

BEGIN WITH THE PUBLIC – IT MUST BE THE PLAN OF THE COMMUNITY.

- Acknowledge the community's **concern** by listening. There are issues that your community has and you need to listen and hear. Only then can you begin to build the trust necessary to proceed.
- Seek the real and meaningful **involvement** of interested parties in your community. Involvement is the means to dialogue, understanding and solutions.
- By showing concern and seeking involvement you will have built **acceptance** in the process. This is the first step in building a consensus.
- By the community accepting the process, a clear **direction** can be set to attack the problem.
- Having a clear direction leads to **buy-in** on the part of the community. This begins the process of problem solving.
- As a result of buy-in, the community obtains **ownership** of the process and thus the solutions.
- The mere acceptance of ownership leads to the **empowerment** of the community to work with you to find solutions.
- Empowerment on the part of the City means little without the **transfer of responsibility** to the community. More choices are not necessarily the answer if the groundwork is not laid to assume responsibility for their implementation of those choices. The plan is not the plan of the planner, the Mayor or the Council member; **it must be the plan of the community**. Neither the planner nor the local government can take responsibility for successful community building.

PRINCIPLE # 2 - DEVELOP A CLEAR *VISION* THAT IS SHARED BY THE COMMUNITY

Principle #2 Develop a Clear Community Vision

What Is a Vision?

A vision is a community based strategic planning effort in which citizens and leaders work together to identify a series of shared goals encompassing all aspects of community life. These goals can cover such areas of common concern as the natural and built environment, economic and community development, transportation, education, culture, recreation, sports, race relations and human needs.

In addition to community goals, the vision process defines specific strategies for each goal and, if desired, can outline a short -term action plan to jump-start the implementation phase of the vision.

The rewards of a grass-roots community-based vision process can be extraordinary, as has been demonstrated by the many communities that have undertaken similar efforts throughout the country.

An agreed-upon agenda for the future of a community will boost that community's ability to develop and grow in ways that are sustainable and in harmony with its unique cultural and physical identity. It will also develop the leadership potential of its citizens, generate community pride and expedite the implementation of projects and programs.

A vision requires re-defining the terms of public/private partnerships to include citizen input and support.

A vision requires a renaissance of the original concept of citizenship - the recognition that citizenship is both a privilege and a responsibility. It requires the re-positioning of the citizen as a pro-active participant in the decision-making process as well as in the implementation of programs.

The core ideas of visioning are:

- People are more likely to change if they articulate what they actually want, rather than discuss the problems that have created the current conditions.

- The future can not be predicted, but people can express what they desire for the future. By doing this, they are more likely to work together toward the desired condition.

Belief in these ideas has enabled communities of all sizes to develop a shared vision for the future, overcome the status-quo, and successfully implement agreed-upon projects and initiatives.

Benefits of Visions

Visioning has demonstrated the ability to accomplish objectives which are hard to achieve in any other way.

These include:

- **Creating shared goals** for a community's, a region's or a complex organization's future.
- **Identifying concrete strategies** for the long- and short term actions needed to accomplish the shared goals.
- **Building consensus and good will** between factions that are commonly perceived to be at odds with each other.
- **Spurring and facilitating action** by building consensus on projects and initiatives, and by creating a strong sense of "ownership" in them.
- **Energizing local networks** of special interest groups and civic organizations by bringing them into the vision process.
- **Developing new leadership** in communities by giving citizens an opportunity to become intimately involved in the decision making process.

The Principles of Smart Growth

American Planning Association – Principles of Smart Growth. Smart growth means using comprehensive planning to guide, design, develop, revitalize and build communities that:

- have a unique sense of community and place;
- preserve and enhance valuable natural and cultural resources;
- equitably distribute the costs and benefits of development;
- expand the range of transportation, employment and housing choices in a fiscally responsible manner;
- value long-range, regional considerations of sustainability over short term incremental geographically isolated actions; and
- promote public health and healthy communities

Core principles of Smart Growth include:

RECOGNITION THAT ALL LEVELS OF GOVERNMENT, AND THE NON-PROFIT AND PRIVATE SECTORS, PLAY AN IMPORTANT ROLE IN CREATING AND IMPLEMENTING POLICIES THAT SUPPORT SMART GROWTH.

The principles of "smart growth" provide a solid foundation for the development of a shared vision

Every level of government - federal, state, regional, county, and local -- should identify policies and practices that are inconsistent with Smart Growth and develop new policies and practices that support Smart Growth. Local governments have long been the principal stewards of land and infrastructure resources through implementation of land use policies. Smart Growth respects that tradition, yet recognizes the important roles that federal and state governments play as leaders and partners in advancing Smart Growth principles at the local level.

STATE AND FEDERAL POLICIES AND PROGRAMS THAT SUPPORT URBAN INVESTMENT, COMPACT DEVELOPMENT, AND LAND CONSERVATION.

State and federal policies and programs have contrib-

uted to urban sprawl and need to be re-examined and replaced with policies and programs that support Smart Growth, including cost effective, incentive-based investment programs that target growth-related expenditures to locally-designated areas.

PLANNING PROCESSES AND REGULATIONS AT MULTIPLE LEVELS THAT PROMOTE DIVERSITY, EQUITY AND SMART GROWTH PRINCIPLES.

Appropriate citizen participation ensures that planning outcomes are equitable and based on collective decision-making. Planning processes must involve comprehensive strategies that engage meaningful citizen participation and find common ground for decision-making.

INCREASED CITIZEN PARTICIPATION IN ALL ASPECTS OF THE PLANNING PROCESS AND AT EVERY LEVEL OF GOVERNMENT.

Appropriate citizen participation ensures that planning outcomes are equitable and based on collective decision-making. Planning processes must involve comprehensive strategies that engage meaningful citizen participation and find common ground for decision-making.

A BALANCED, MULTI-MODAL TRANSPORTATION SYSTEM THAT PLANS FOR INCREASED TRANSPORTATION CHOICE.

Land use and transportation planning must be integrated to accommodate the automobile and to provide increased transportation choices, such as mass transit, bicycles, and walking. Development must be pedestrian -friendly. All forms of transportation must be reliable, efficient and user-friendly, allowing full access by all segments of the population to housing, employment, education, and human and community services.

A REGIONAL VIEW OF COMMUNITY.

Smart Growth recognizes the interdependence of neighborhoods and municipalities in a metropolitan region and promotes balanced, integrated regional development achieved through regional planning processes.

ONE SIZE DOESN'T FIT ALL - A WIDE VARIETY OF APPROACHES TO ACCOMPLISH SMART GROWTH.

Customs, politics, laws, natural conditions, and other factors vary from state to state and from region to region. Each region must develop its own approach to problem solving and planning while involving the public, private and non-profit sectors. In some areas, this may require a significant change in perspective and culture, but such changes are necessary and beneficial in obtaining the results that Smart Growth aims to achieve.

EFFICIENT USE OF LAND AND INFRASTRUCTURE.

High-density development, infill development, redevelopment, and the adaptive re-use of existing buildings result in efficient utilization of land resources and more compact urban areas. Efficient use of public and private infrastructure starts with creating neighborhoods that maximize the use of existing infrastructure. In areas of new growth, sewers, water lines, schools and other infrastructure should be planned as part of comprehensive growth and investment strategies. Regional cooperation is required for large infrastructure investments to avoid inefficiency and redundancy.

CENTRAL CITY VITALITY.

Every level of government should identify ways to reinvest in existing urban centers, to re-use former industrial sites, to adapt older buildings for new development, and to bring new development to older, low-income and disadvantaged neighborhoods.

VITAL SMALL TOWNS AND RURAL AREAS.

APA recognizes that inefficient land use and low-density development is not confined to urban and suburban areas, but also occurs around villages and small towns. once thriving main streets are checkered with abandoned storefronts while a strip of new commercial springs up on the edge of town together with housing and public facilities. Programs and policies need to support investment to improve the economic health of small town downtowns, and rural community centers. The high cost of providing basic infrastructure and services in rural communities demands efficient use of existing facilities, and compact development. Housing choices in rural areas need to take into account changing needs resulting from shifting demographics, the cost of providing services and infrastructure, the cost

of services and infrastructure capacity, and must address upgrading of existing housing as an alternative or complement to new development. Smart Growth is critically important in rural and small town economic development initiatives because the limited availability of public funding means each dollar must accomplish more.

A GREATER MIX OF USES AND HOUSING CHOICES IN NEIGHBORHOODS AND COMMUNITIES FOCUSED AROUND HUMAN-SCALE, MIXED-USE CENTERS ACCESSIBLE BY MULTIPLE TRANSPORTATION MODES.

Mixed-use developments include quality housing, varied by type and price, integrated with shopping, schools, community facilities and jobs. Human-scale design, compatible with the existing urban context and quality construction contribute to successful compact, mixed-use development and also promote privacy, safety, visual coherency and compatibility among uses and users.

CONSERVATION AND ENHANCEMENT OF ENVIRONMENTAL AND CULTURAL RESOURCES.

Biodiversity, green infrastructure, and green architecture are integral to Smart Growth. Smart Growth protects the natural processes that sustain life; preserves agricultural land, wildlife habitat, natural landmarks and cultural resources; integrates biodiversity, ecological systems and natural open space (green infrastructure) into the fabric of development; encourages innovative storm water management; is less consumptive and more protective of natural resources; maintains or improves air quality, and enhances water quality and quantity for future generations. Energy conservation is a major benefit and result of Smart Growth, helping to create more sustainable development and allow people to meet current needs without compromising the needs of future generations. Green architecture incorporates environmental protection and reduced natural resource consumption into the design and construction of buildings, also enhancing the comfort and health of the occupants.

CREATION OR PRESERVATION OF A "SENSE OF PLACE".

A "sense of place" results when design and development protect and incorporate the distinctive character of a community and the particular place in which it is

located. Geography, natural features, climate, culture, historical resources, and ecology each contribute to the distinctive character of a region.

PRINCIPLE #3 – BE PROACTIVE

Principle # 3 Proactive Planning

The most effective way to achieve any planning objective is through the use of proactive planning. By engaging the community to define goals and means, specific design objectives can be achieved. By working with residents and property owners, town planning can lay the framework for the creation of totally integrated communities - integrated in the terms of jobs-housing balance, residential shopping and entertainment opportunities, environmental protection, and a balanced transportation framework. Planning projects must have at their base a clear understanding of the interrelationship between physical, social, and environmental elements. It is this balance that is critically important to establishing a long-term sustainable community.

Proactive planning is hard work. It is time-consuming and requires the commitment of considerable resources. More importantly, proactive planning requires an understanding that **planning is a continuous process** – one of constant evaluation and improvement.

Despite the rigorous requirements that Florida's planning and growth management system places upon its cities and counties, a community can satisfy the letter of the law without any meaningful commitment to the underlying principles. An effective public planning program requires more than response to a checklist and awaiting the next development proposal to appear for review.

PRINCIPLE #4 – BE THOROUGH AND CONSISTENT

Principle # 4 Be Thorough and Consistent

Every decision is important and will affect the community. Understand this and focus on the interrelationships. Begin by instituting a 'smart growth' culture in-house through training and setting the right example. Integration of planning policies and the actions of other departments such as public works, parks, water and sewer are especially critical.

"Every increment of construction should be done in such a way as to heal the city." Christopher Alexander

Each planning decision should be weighed against the vision. This means that the requirement for "consistency" should be applied for each action taken at the local level. It does not mean that local officials have no discretion. Quite the contrary is true. The *planning official* has the responsibility of evaluating complex and often conflicting information in making decisions. Without a clear understanding of what the community is trying to accomplish and the direction it wishes to go, these decisions can become isolated and detached and subject t whim, to emotion and to the politics of the moment.

Insist on sound information and thorough analysis. As a *planning official,* you cannot make sound decisions without trustworthy and competent information. Your staff is the primary source for the "substantial competent evidence that you require and you should strive to create an environment that encourages objectivity and professional competence.

Be consistent and predictable. A shared vision offers – perhaps more than any other attribute of your planning program – an opportunity for the consistent and predictable application of planning principles. Almost every planning success story can point to the sustained application of a concept or principles over a period of time.

PRINCIPLE #5 – MAKE IT EASY TO DO THE RIGHT THING

Principle # 5 Make It Easy to do the Right Thing

How do we make the system work more effectively? We must find ways to better educate our *planning officials* and make it easier for developers to do the right thing.

It is important to recognize that the growth and development of any community is driven by private investment decisions. These decisions tend to follow a "path of least resistance" and despite good intentions will be negatively affected by uncertainty, excessive approval requirements and delay. Without realizing it, communities often penalize the best development by erecting procedural, regulatory and political barriers to the type of development that they want.

The use of administrative review procedures and clear understandable codes and practices can be successful. Too often we get lost in the details of code compliance and entirely miss that the fundamental purpose of plan review is to improve the quality of the overall environment. So, whether the issue is the need to provide a pedestrian interface, improve the building scale to fit with surrounding development or simply changes to the location and design of the stormwater system, strive to understand what the "right thing" is for your community and to ensure that the system rewards such actions.

Chapter Five - The Comprehensive Plan

All 67 counties and 410 cities in Florida must adopt a Comprehensive Plan

In Florida, all local governments are required by State law to adopt a comprehensive plan.

The Planning Process

The planning process involves a series of essential steps:

- Identify the Problem or the Opportunity
- Collect Information on the Problems and Opportunities
- Compare the Alternatives
- Select a Plan and Put It to Work
- Monitor Progress

The planning process is universal. Its basic steps form the framework for planning in Florida

The Comprehensive Plan is the only public document that describes the community as a whole in terms of its complex and mutually supporting networks. As a statement of long term goals, objectives and policies, it provides both a broad perspective and a guide to short-term community decisions.

The Comprehensive Plan is the only public document that views the community as a whole.

In short, the comprehensive plan is:

- A public guide to community decision making
- An assessment of the community's needs
- A statement of community values, goals, and objectives
- A blueprint for the community's physical development
- A public document adopted by government
- Continuously updated as conditions change

The Comprehensive Plan forms a basis for how a community regulates development and how it invests in infrastructure and services

Three basic products emerge from the planning process

- The Comprehensive Plan
- Land Development Regulations
- Capital Improvement Programs

The purposes of planning and growth management are enunciated in state law. The authority for local government to engage in planning is guided by these statements of purpose

Purposes of Planning in Florida

Each local government shall prepare a comprehensive plan ....

Comprehensive Planning is necessary so that:

- *local governments can preserve and enhance present advantages;*
- *encourage the most appropriate use of land, water, and resources, consistent with the public interest;*
- *overcome present handicaps; and*
- *deal effectively with future problems that may result from the use and development of land within their jurisdictions.*

Through the process of comprehensive planning, it is intended that units of local government

- *can preserve, promote, protect, and improve the public health, safety, comfort, good order, appearance, convenience, law enforcement and fire prevention, and general welfare;*
- *facilitate the adequate and efficient provision of transportation, water, sewerage, schools, parks, recreational facilities, housing, and other requirements and services; and*
- *conserve, develop, utilize, and protect natural resources within their jurisdictions.*

General Requirements of the Comprehensive Plan

The Comprehensive Plan is required to provide *principles, guidelines, standards and strategies for the orderly and balanced future economic, social, physical, environmental and fiscal development* of the community.

All elements of the Comprehensive Plan must be based on relevant and appropriate data and analysis by the local government.

The several elements of the comprehensive plan are required to be internally consistent.

Mandatory Elements

The Community Planning Act requires that a local comprehensive plan contain certain elements:

The Comprehensive Plan must include and be based on supporting data and analysis, and be internally consistent

Future Land Use Element based on

- the amount of land required to accommodate anticipated growth;
- the projected permanent and seasonal population of the area;
- the character of undeveloped land;
- the availability of water supplies, public facilities and services;
- the need for redevelopment, including the renewal of blighted areas and the elimination of nonconforming uses;
- the compatibility of land uses in close proximity to military installations;
- the compatibility of uses on lands near airports;
- the discouragement of urban sprawl;
- the need for job creation, capital investment, and economic development that will strengthen and diversify the community's economy; and
- the need to modify land uses and development patterns within antiquated subdivisions.

The Future Land Use Element must provide for sufficient land to accommodate projected growth

The Community Planning Act mandates that the amount of land designated for future land use must (1) provide a balance of uses that foster *vibrant, viable communities and economic development opportunities* and *(2) allow the operation of real estate markets to provide adequate choices for residents and business.* At a minimum, sufficient land must be provided to accommodate the medium projections of the University of Florida's Bureau of Economic and Business Research for at least a 10 year planning period.

The Future land Use Element is comprised of a land use map or map series supplemented by goals, policies, and measurable objectives that

- designates proposed future general distribution, location, and extent of the uses of land for residential uses, commercial uses, industry, agriculture, recreation, conservation, education, public buildings and grounds, other public facilities, and other categories of the public and private uses of land.

- Establishes standards for the control distribution of population densities and building and structure intensities.

The Future Land Use Element must also include criteria to:

- Achieve the compatibility of lands near military installations, and airports;
- Encourage the preservation of recreational and commercial working waterfronts for water dependent uses in coastal communities;
- Encourage the location of schools proximate to urban residential areas to the extent possible;
- Coordinate future land uses with the topography and soil conditions, and the availability of facilities and services;
- Ensure the protection of natural and historic resources;
- Provide for the compatibility of adjacent land uses; and
- Provide guidelines for the implementation of mixed use development

Transportation Element addressing mobility issues. The purpose of the transportation element is *to provide for a safe, convenient multimodal transportation system* that is *coordinated with the future land use map or map series and designed to support all elements of the comprehensive plan.* The element must be *coordinated with the plans and programs of the metropolitan planning organization (MPO), transportation authority, Florida Transportation Plan and the Department of Transportation's work program.*

Each local government's transportation element is required to address *traffic circulation including the types, locations and extent of existing and proposed major thoroughfares and transportation routes including bicycle and pedestrian ways.* If transportation corridors are designated, the local government may then adopt a transportation corridor management ordinance. The element must also contain a map or map series that depicts the existing and proposed features and coordinated with the future land use map.

Local governments within a metropolitan planning area designated as a MPO must also address:

- all alternative modes of transportation such as public transportation, pedestrian and bicycle travel;

- aviation, rail, seaport facilities and intermodal terminals;
- evacuation of coastal populations;
- airports, projected airport and aviation development and land use compatibility around airports;
- the identification of land use densities and intensities and transportation management programs to promote public transportation systems in designated public transportation corridors.

If outside of MPO boundaries, municipalities with populations greater than 50,000 and counties with populations greater than 75,000 must include mass-transit provisions showing methods for the moving of people, rights-of-way, terminals and related facilities.

General Sanitary Sewer, Solid Waste, Drainage, Potable Water, and Natural Groundwater Aquifer Recharge Element correlated to guidelines for future land use and indicating ways to provide for future potable water, drainage, sanitary sewer, solid waste, and aquifer recharge protection requirements for the area.

The element must specifically address *water supply* by demonstrating consistency with the regional water supply plan.

Conservation Element prescribing the conservation, use, and protection of natural resources in the area, including air, water, water recharge areas, wetlands, waterwells, estuarine marshes, soils, beaches, shores, flood plains, rivers, bays, lakes, harbors, forests, fisheries and wildlife, marine habitat, minerals, and other natural and environmental resources including factors that effect energy conservation.

The element must specifically assess the community's current and projected water needs and sources based on the demands for industrial, agricultural and potable water use and analyze the quality and quantity available to meet those demands.

Recreation & Open Space Element indicating a comprehensive system of public and private sites for recreation, including, but not limited to, natural reservations, parks and playgrounds, parkways, beaches and public access to beaches, open spaces, and other

recreational facilities.

Housing Element consisting of standards, plans, and principles to be followed in:

- *the provision of housing for all* current and anticipated future residents of the jurisdiction;
- *the elimination of substandard dwelling conditions;*
- *the structural and aesthetic improvement of existing housing;*
- *the provision of adequate sites for future housing, including housing for low-income, very low income, and moderate-income families, mobile homes, and group home facilities and foster care facilities, with supporting infrastructure and public facilities;*
- *the provision for relocation housing and identification of historically significant and other housing for purposes of conservation, rehabilitation, or replacement*;
- *the formulation of housing implementation programs;*
- *the creation or preservation of affordable housing to minimize the need for additional local services and avoid the concentration of affordable housing units only in specific areas of the jurisdiction*.

Coastal Management Element is required coastal counties and municipalities within their boundaries. The element must establish policies that:

- *maintain, restore, and enhance the overall quality of the coastal zone environment;*
- *preserve the continued existence of viable populations of all species of wildlife and marine life;*
- *protect the orderly and balanced utilization and preservation of all living and nonliving coastal zone resources;*
- *avoid irreversible and irretrievable loss of coastal zone resources;*
- *use ecological planning principles and assumptions to be used in the determination of suitability and*

extent of permitted development;

- *limit public expenditures that subsidize development in high-hazard coastal areas;*
- *protect human life against the effects of natural disasters;*
- *direct the orderly development, maintenance, and use of ports;*
- *preservation of historic and archaeological resources.*

As an option, a local government may adopt an *adaptation action area* including policies intended *to improve resilience to coastal flooding resulting from high-tide events, storm surge, flash floods, stormwater runoff, and the related impacts of sea level rise.*

Capital Improvement Element is designed to consider the need for and the location of public facilities.

The element must :

- outline principles for construction, extension, or increase in capacity of public facilities and principles for correcting existing public facility deficiencies;
- estimate public facility costs, including a delineation of when facilities will be needed, the general location of the facilities, and projected revenue sources to fund the facilities;
- provide standards to ensure the availability of public facilities and the adequacy of those facilities to meet established acceptable levels of service;
- provide a schedule of capital improvements which includes any publicly funded projects of federal, state, or local government, and which may include privately funded projects for which the local government has no fiscal responsibility. The schedule must include transportation improvements included in the applicable metropolitan planning organization's transportation improvement program.

Intergovernmental Coordination Element shows the relationships and states the principles and guidelines to be used in coordinating with the plans of school boards, regional water supply authorities, and with the plans of adjacent municipalities, the county,

adjacent counties, or the region.

The element must state principles and guidelines to be used in coordinating the adopted comprehensive plan with the plans of school boards and other units of local government providing facilities and services but not having regulatory authority over the use of land. In addition, the intergovernmental coordination element must describe joint processes for collaborative planning and decision making on population projections and public school siting, the location and extension of public facilities subject to concurrency, and siting facilities with countywide significance, including locally unwanted land uses whose nature and identity are established in an agreement.

Optional Elements

Comprehensive plans may contain optional elements in addition to or as a supplement to the mandatory elements. Some examples are listed below.

- **Public School Facilities Element** was a required element until 2011. Consequently each local government in Florida has adopted such an element and may elect to retain it especially if school concurrency is retained as a local option.
- **Airport Master Plan** prepared for a licensed publically owned and operated airport may be incorporated into the comprehensive plan.
- **Public Buildings Element** showing locations and arrangements of civic and community centers, public schools, hospitals, libraries, police and fire stations, and other public buildings. This plan element should show particularly how it is proposed to effect coordination with governmental units having public development and service responsibilities, capabilities, and potential but not having land development regulatory authority.
- **Community Design Element** which may consist of design recommendations for land subdivision, neighborhood development and redevelopment, design of open space, and similar matters to serve as guides for future planning and development.
- **Redevelopment Element** consisting of plans and programs for the redevelopment of slums and blighted locations and for community redevelop-

ment, including housing sites, business and industrial sites, public buildings sites, recreational facilities, and other purposes.

- **Public Safety Element** for the protection of residents and property of the area from fire, hurricane, or manmade or natural catastrophe.
- **Hazard Mitigation / Post Disaster Plans.** Local governments that are not required to prepare coastal management are strongly encouraged to adopt hazard mitigation/post disaster redevelopment plans. These plans establish policies regarding redevelopment, infrastructure, densities, nonconforming uses, and future land use patterns.
- **Historic and Scenic Preservation Element** setting out plans and programs for those structures or lands in the area having historical, archaeological, architectural, scenic, or similar significance.
- **Economic Element** setting forth guidelines for the commercial and industrial development, if any, and the employment within such areas. The element may detail the type of commercial and industrial development sought, correlated to employment needs of the area, and may set forth methods by which a balanced and stable economic base will be pursued.

Florida cities and counties may include optional elements in their comprehensive plan depending on their community's character and needs

Special Emphasis

Certain issues and subjects merit high priority and emphasis for planning and growth management in Florida.

School Coordination

School Coordination has been the target of legislative change in recent years due to the impact of development and growth on schools and the challenges of maintaining a quality public education system. The 2005 Florida Legislature enacted sweeping changes most notably mandating "school concurrency". While the Community Planning Act of 2011 reversed some of these mandates, school planning is now well established as an important component of comprehensive planning.

The highlights of the current statutes and rules regarding school coordination are as follows:

School coordination is an issue of statewide concern. Current statutes and rules require a high degree of coordination among local governments and the school district and have significant implications for planning and how schools are treated in local comprehensive plans

- School concurrency is optional. If school concurrency is to be retained, the county and municipalities representing at least 80% of the county population must participate and the comprehensive plan must:
  - demonstrate that the adopted levels of service can be reasonable met;
  - provide principles, guidelines, standards and strategies for the establishment of a concurrency management system;
  - Provide the means for development to proceed by the mitigation of deficiencies including the payment of a proportionate share contribution.

- The Public School Facilities Element is optional for all local governments within a school district (with some exceptions for counties and municipalities not experiencing growth in school enrollment).

- The Future Land Use Element
  - must clearly identify the land use categories in which public schools are an allowable use;
  - must allocate sufficient land proximate to residential development to meet the projected needs;
  - must encourage the location of schools proximate to urban residential areas; and shall require that the local government seek to collocate public facilities, such as parks, libraries, and community centers, with schools to the extent possible and to encourage the use of elementary schools as focal points for neighborhoods.

- The Intergovernmental Coordination Element
  - must state principles and guidelines for coordinating the adopted comprehensive plan with the plans of school boards.
  - must describe joint processes for collaborative planning and decisionmaking on population projections and public school siting, the location and extension of public facilities subject to concurrency, and siting facilities with countywide significance, including locally unwanted land uses.

- Public Schools Interlocal Agreement. The county and municipalities located within the geographic area of a school district must enter into an interlo-

cal agreement with the district school board that jointly establishes how plans and processes of are to be coordinated

Urban Sprawl

In 1994, Rule 9J-5 was amended to provide criteria for reviewing local comprehensive plans and plan amendments for adequacy in discouraging the proliferation of urban sprawl. The Community Planning Act of 2011 repealed Rule 9J-5 but codified the guidelines pertaining to sprawl.

The discouragement of urban sprawl accomplishes many related planning objectives. The presence and potential effects of multiple indicators are evaluated to determine whether they collectively reflect a failure to discourage urban sprawl.

Primary indicators. The primary indicators that a plan or plan amendment does not discourage the proliferation of urban sprawl

- allows substantial areas to develop as low intensity, low-density, or single-use development;
- allows urban development to occur in rural areas at substantial distances from existing urban areas while leaping over undeveloped lands;
- allows urban development in radial, strip, isolated or ribbon patterns generally emanating from existing urban developments;
- allows the premature or poorly planned conversion of rural land to other uses;
- fails to protect and conserve natural resources;
- fails adequately to protect agricultural areas and activities;
- fails to maximize use of existing and future public facilities and services.
- allows land use patterns that disproportionately increase the cost in time, money and energy, of providing and maintaining facilities and services;
- fails to provide a clear separation between rural and urban uses;

School coordination is an issue of statewide concern. Current statutes and rules require a high degree of coordination among local governments and the school district and have significant implications for planning and how schools are treated in local comprehensive plans

Discouraging the proliferation of urban sprawl serves many planning objectives

- discourages or inhibits infill development or the re-development of existing neighborhoods and communities;
- fails to encourage an attractive and functional mix of uses;
- results in poor accessibility among linked or related land uses;
- results in the loss of significant amounts of open space.

Remedies. The local comprehensive plan will not be deemed to encourage urban sprawl if four of the following eight criteria are satisfied:

- Directs or locates economic growth and associated land development to geographic areas of the community in a manner that does not have an adverse impact on and protects natural resources and ecosystems;
- Promotes the efficient and cost-effective provision or extension of public infrastructure and services;
- Promotes walkable and connected communities and provides for compact development and a mix of uses at densities and intensities that will support a range of housing choices and a multimodal transportation system, including pedestrian, bicycle, and transit;
- Promotes conservation of water and energy;
- Preserves agricultural areas and activities, including silviculture, and dormant, unique, and prime farmlands and soils.
- Preserves open space and natural lands and provides for public open space and recreation needs.
- Creates a balance of land uses based upon demands of residential population for the nonresidential needs of an area.
- Provides uses, densities, and intensities of use and urban form that would remediate an existing or planned development pattern in the vicinity that constitutes sprawl or if it provides for an innovative

development pattern such as transit-oriented developments or new towns as defined in s. 163.

Urban Infill and Redevelopment

The "Growth Policy Act" (Chapter 163.2511) declares that:

- Fiscally strong urban centers are beneficial to regional and state economies and resources and for the reduction of future urban sprawl.
- Healthy and vibrant urban cores benefit their respective regions conversely, the deterioration of those urban cores negatively impacts the surrounding area
- Governments need to work in partnership with communities and the private sector to revitalize urban centers
- State urban policies should guide in preserving and redeveloping existing urban cores and promoting the adequate provision of infrastructure, human services, safe neighborhoods, educational facilities, and economic development to sustain these cores
    - through an integrated and coordinated community effort
    - incentives to promote urban infill and redevelopment

Local government comprehensive plans and implementing land development regulations must include strategies which maximize the use of existing facilities and services through redevelopment, urban infill development, and other strategies for urban revitalization.

A local government may designate a geographic area or areas within its jurisdiction as an urban infill and redevelopment area for the purpose of targeting economic development, job creation, housing, transportation, crime prevention, neighborhood revitalization and preservation, and land use incentives to encourage urban infill and redevelopment within the urban core. Such a designation requires an amendment of the Comprehensive Plan and must include:

- a collaborative and holistic community participation process that encourages communities to participate in the design and implementation of the plan, in-

cluding a "visioning" of the urban core;

- ongoing involvement of stakeholder groups including community-based organizations, neighborhood associations, financial institutions, faith organizations, housing authorities, financial institutions, existing businesses, businesses interested in operating in the community, schools, and neighborhood residents;

- the neighborhood participation process must include a governance structure whereby the local government shares decision making authority with communitywide representatives.

A local government seeking to designate an urban infill and redevelopment area must prepare a plan demonstrating the local government and community's commitment to comprehensively address the urban problems. The plan must:

- identify activities and programs to accomplish locally identified goals

- identify enterprise zones, community redevelopment areas, community development corporations, brownfield areas, downtown redevelopment districts, safe neighborhood improvement districts, historic preservation districts, and empowerment zones or enterprise communities

- identify a memorandum of understanding with the district school board regarding public school facilities

- identify each neighborhood within the proposed area

- state community preservation and revitalization goals and projects identified through a collaborative and holistic community participation process

- identify how the local government and community-based organizations intend to implement affordable housing programs
- identify strategies for reducing crime.

- identify and adopt a package of financial and local government incentives such as:

  - waiver of license and permit fees

Urban infill and redevelopment is necessary to maintain healthy urban centers. Florida's planning process emphasizes the importance of infill and redevelopment and provides techniques and incentives to achieve this objective

  - exemption of sales from local option sales surtaxes
  - waiver of delinquent local taxes or fees
  - expedited permitting
  - lower transportation impact fees
  - prioritization of infrastructure spending
  - local government absorption of developers' concurrency costs.

- Identify the governance structure

The 2005 Florida Legislature provided additional incentives for the designation of urban infill and redevelopment areas. Notably, development within a designated urban infill and redevelopment area is exempt from Development of Regional Impact (DRI) review provided (1) the local government has entered into a binding agreement with the Department of Transportation and with impacted jurisdictions to mitigate impacts and state and regional facilities and (2) has adopted a proportionate share methodology.

Water Supply

Adequate water supply is critical to all Floridians. Growth places enormous demands on the State's water resources and the management of these resources is receiving considerable statewide attention.

The 2005 Florida Legislature coupled growth management reform with water resource protection and sustainability to ensure that:

- potable water provisions of local comprehensive plans are firmly linked with the water management districts' regional water supply plans. Local plans include availability of water supplies and public facilities to meet existing and projected water use demands;

- local plans include a work plan for building public, private and regional water supply facilities to meet projected needs;

- local plans identify alternative water supply projects, including conservation and reuse, necessary to meet the water needs identified within the local government's jurisdiction;

- funding alternative water supply development is a shared responsibility between local water providers, users, the water management districts and the State;
- proposed uses of the same source by more than one local government are identified;
- in addition to the treatment and distribution facilities being ready for new development, a confirmed source of raw water is identified to send to the facilities;

Evaluating the Comprehensive Plan

Each local government shall determine at least every seven years whether plan amendments are necessary to reflect changes in state requirements since the last update of the comprehensive plan and notify DCA by letter on its determination. DCA publishes a schedule indicating to local government when such determination should be made.

If the local government determines that such amendments are necessary, then the plan amendments will be prepared and transmitted to DCA within one year of the determination.

If the local government fails to either timely notify DCA of its determination to update the comprehensive plan or to transmit such update amendments, it may not amend its comprehensive plan until it complies with these requirements.

Amendments submitted to DCA to update comprehensive plans will be reviewed through the *state coordinated process*.

Amending the Comprehensive Plan

The Community Planning Act significantly altered the process for amending the local government comprehensive plan. The Act eliminated the "twice-a-year" restriction and established three distinct review procedures:

- Expedited State Review Process
- State Coordinated Review Process
- Small Scale Amendments

Expedited State Review

Local comprehensive plans are required to consider the Regional Water Supply Plan and to include a ten-year work plan for constructing water supply facilities.

Most comprehensive plan amendments are expected to follow the Expedited State Review Process.

Step 1: Local Planning Agency (LPA) Stage— The LPA conducts at least one public hearing on the comprehensive plan amendment in accordance with the public notice requirements established by statute.

Step 2—Transmittal Stage—The governing body considers transmittal of the proposed amendment at a public hearing in accordance with the notice requirements established by statute.

Step 3—Proposed Amendment Package—The local government prepares the Proposed Amendment Package and submits the package to the State Land Planning Agency and to the state, regional agencies and local agencies identified by the statutes.

Step 4—Review and Comment Stage—The State Land Planning Agency and the review agencies send comments directly to the Local Government. Comments must be received by the Local Government within 30 days.

Step 5—Adoption Stage—The Local Government (governing body) holds its second public hearing within 180 days of receipt of agency comments. If adopted (by ordinance), the Local Government transmits the adopted amendment package to the State Land Planning Agency. The State Land Planning Agency has 5 days to determine completeness of the adopted amendment package.

Step 6- Challenge Stage—Any "affected party" has 30 days from the date the adopted amendment package is deemed complete to file petition challenging the amendment.

Step 7—Effective Date—The amendment becomes effective 31 days after the State Land Planning Agency determines the amendment package is complete and no petition is filed by an affected party.

State Coordinated Review

Types of amendments that must follow the State Coordinated Review guidelines include

1. Areas of Critical State Concern
2. Rural Land Stewardship

Every local government is required to evaluate their progress toward implementing their comprehensive plan at least once every seven years.

3. Sector Plans
4. Comprehensive Plans based on Evaluation and Appraisal Reports
5. A new plan for newly incorporated municipalities

Step 1: Local Planning Agency (LPA) Stage— The LPA conducts at least one public hearing on the comprehensive plan amendment in accordance with the public notice requirements established by statute.

Step 2—Transmittal Stage—The governing body considers transmittal of the proposed amendment at a public hearing in accordance with the notice requirements established by statute.

Step 3—Proposed Amendment Package—The local government prepares the Proposed Amendment Package and submits the package to the State Land Planning Agency and to the state, regional agencies and local agencies identified by the statutes. The transmittal letter must indicate that the amendment is subject to the State Coordinated Review Process.

Step 4—Review and Comment Stage—The State Land Planning Agency must notify the Local Government and the reviewing agencies that the amendment has been received. Within 30 days of receipt, the reviewing agencies send their comments to the State Land Planning Agency.

Step 5—State Land Planning Agency Review—Within 60 days of receipt of the complete amendment, the State Land Planning Agency issues its Objections, Recommendations and Comments Report (ORC) to the Local Government.

Step 6—Adoption Stage—The Local Government (governing body) holds its second public hearing within 180 days of receipt of agency comments. If adopted (by ordinance), the Local Government transmits the adopted amendment package to the State Land Planning Agency with a copy to any other agency or local government that provided comments. The State Land Planning Agency has 5 days to determine completeness of the adopted amendment package.

Step 6- Challenge Stage—Any "affected party" has 30 days from the date the adopted amendment package is deemed complete to file petition challenging the amendment.

Step 7—Effective Date—Within 45 days of receipt of a

complete adopted plan amendment, the State Land Planning Agency issues Notice of Intent to find the plan "in compliance" or "not in compliance"

The plan amendment goes into effect if the State Land Planning Agency finds the amendment "in compliance" and no challenge is filed by an affected party.

Small Scale Amendments

Local governments may adopt small scale amendments under the following conditions:

1. The proposed amendment involves a use of 10 acres or fewer;

2. The cumulative annual effect of the acreage for all small scale development amendments adopted by the local government does not exceed a maximum of 120 acres in a calendar year.

3. The proposed amendment does not involve a text change to the goals, policies, and objectives of the local government's comprehensive plan, but only proposes a land use change to the future land use map for a site-specific small scale development activity. However, text changes that relate directly to, and are adopted simultaneously with, the small scale future land use map amendment shall be permissible under this section.

Step 1— Local Planning Agency (LPA) Stage— The LPA conducts at least one public hearing on the comprehensive plan amendment in accordance with the public notice requirements established by statute.

Step 2—Adoption Stage—The Local Government (governing body) holds a public hearing to consider the small scale amendment in accordance with the notice requirements prescribed by statute.

Step 3—Effective Date— The plan amendment goes into effect upon adoption (by ordinance) by the governing body.

The Local Government is invited (but not required) to transmit a copy of the small scale amendment to the State Land Planning Agency.

Chapter Six - Implementing the Comprehensive Plan

The Florida legislature intends that the Comprehensive Plan be implemented. The Plan must describe how programs, activities and land development regulations will be initiated, modified or continued to implement the Comprehensive Plan

Land Development Regulations

Relationship of comprehensive plan to exercise of land development regulatory authority.- *-It is the intent of this act that adopted comprehensive plans or elements thereof shall be implemented, in part, by the adoption and enforcement of appropriate local regulations on the development of lands and waters within an area.*

Plan Implementation Requirements*. Recognizing that the intent of the Legislature is that* ***local government comprehensive plans are to be implemented****....., the sections of* ***the comprehensive plan containing goals, objectives, and policies shall describe how the local government's programs, activities, and land development regulations will be initiated, modified or continued to implement the comprehensive plan in a consistent manner****.....*

Land development regulations

Each local government in Florida is required to adopt and enforce land development regulations that are consistent with the Comprehensive Plan

..... each county and each municipality shall adopt .... and enforce land development regulations that are consistent with and implement their adopted comprehensive plan.

Local land development regulations shall contain specific and detailed provisions necessary or desirable to implement the adopted comprehensive plan ... as a minimum:

- ***subdivision of land;*** *must meet the requirements of Chapter 177, Part I, F.S., and include review procedures, design and development standards, provisions for adequate public facilities, mitigation of development impacts, land dedications,*

fees, and administrative provisions.

- ***the use of land and water ...*** *The implementation of the land use categories in the Future Land Use Element consistent with the future land use map and goals, objectives and policies, including provisions for ensuring appropriate densities and intensities, compatible adjacent land uses and providing for open spaces.*

- ***protection of potable water wellfields ...*** *The control of land uses and activities that may affect potable water wells and wellfields, including identified cones of influence, in order to protect the potable water supply.*

- ***seasonal and periodic flooding .... provide for drainage and stormwater management;*** *The control of areas subject to seasonal and periodic flooding which may include the type, location, density and intensity of land uses located within these areas, in order to provide for drainage and stormwater management and mitigate the impacts of floods, including loss of life and property damage. Adequate drainage facilities may be provided to control individual and cumulative impacts of flooding and nonpoint source pollution in drainage basins existing wholly or in part within the jurisdiction.*

- ***protection of environmentally sensitive lands ....;*** *The protection of environmentally sensitive lands, as designated in the comprehensive plan, from development impacts, including ensuring the protection of soils, groundwater, surface water, shorelines, fisheries, vegetative communities and wildlife habitat.*

- ***signage;*** *The regulation of signage, including but not limited to type, location, size, number and maintenance.*

- ***public facilities and services*** *meet or exceed the standards established in the capital improvements element ..... and are available when needed for the development, ...(concurrency): Provisions assuring that development orders shall not be issued unless public facilities and services which*

meet or exceed the adopted level of service standards are available concurrent with the impacts of the development.

- ***safe and convenient onsite traffic flow, ...*** *The number and sizes of on-site parking spaces, and the design of and control mechanisms for on-site vehicular and pedestrian traffic to provide for public safety and convenience.*

The Community Planning Act also encourages the use of innovative land development regulations. Examples cited in the statute include *the transfer of development rights, incentive zoning, inclusionary zoning, planned unit development, impact fees and performance zoning.*

Criteria for Determining Consistency of Land Development Regulations with the Comprehensive Plan.

The Land Development Regulations must be *"consistent"* with the Comprehensive Plan

The Land Development Regulations must be *"compatible with"*, *"further"* and *"implement"* the Comprehensive Plan.

A determination of consistency of a land development regulation with the comprehensive plan will be based upon the following:

- Characteristics of land use and development allowed by the regulation in comparison to the land use and development proposed in the comprehensive plan. Factors which will be considered include:
  - Type of land use;
  - Intensity and density of land use;
  - Location of land use;
  - Extent of land use; and
  - Other aspects of development
- Whether the land development regulations are compatible with the comprehensive plan, further the comprehensive plan, and implement the comprehensive plan. The term "compatible" means that the land development regulations are not in conflict with the comprehensive plan. The term "further" means that the land development regulations take action in the direction of realizing goals or policies of the comprehensive plan.
- Whether the land development regulations include provisions that implement those objectives and policies of the comprehensive plan that require imple-

menting regulations to be realized, including provisions implementing the requirement that public facilities and services needed to support development be available concurrent with the impacts of such development.

The Elements of the Land Development Regulation

The Land Development Regulation will contain the following elements.

1. Title, Authority and Purpose. This section identifies the specific state enabling provision which empowers the locality to adopt land development regulations. It also spells out, in a "statement of purposes," the community's reasons for adopting the ordinance. The statement of purposes links the rules and regulations listed in the ordinance to the community's values and goals.

2. General Provisions. General provisions include the overriding rules that apply to all land uses and all parcels throughout the community (rather than a single district) and would answer such questions as, "What if a conflict existed between the zoning ordinance and other regulations adopted by the village?"

The Land Development Regulations will contain some essential elements. The Planning Official should understand how the LDR is organized and the purpose of the components.

3. Zoning Districts and Allowed Uses. Text and maps indicating permitted uses and area, height and bulk standards.

4. Subdivision Regulations. Standards and procedures governing the subdivision of land.

5. Design Standards and Improvement Requirements. Standards for the design and improvements to be satisfied by new development.

6. Adequate Public Facilities Requirements (Concurrency). Levels of service and procedures for determining the adequacy of public facilities available to support new development.

7. Administration and Procedures. The assignment of administrative responsibilities and the establishment of procedures and guidelines for the administration of the land development regulation.

8. Interpretations, Exceptions, Equitable Relief and Enforcement. Establishes procedures and criteria for variances, interpretations and enforcement.

9. Definitions. Definitions are especially important because the general public, as well as the courts, must be able to attach specific meaning to the words and concepts appearing in the ordinance.

Zoning

Zoning may be defined as *the division of a jurisdiction into districts (zones) within which permissible uses are prescribed and restrictions on building height, bulk, layout and other requirements are defined.*

While zoning is plain in concept and easy to understand, it is often complex and difficult in application. Of the decisions that planning officials make, there are few that will equal zoning in terms of the day-to- day impact on the health, safety, and welfare of ordinary people.

Zoning divides a Jurisdiction into districts within which permissible uses are prescribed along with standards for their development.

In making zoning decisions, the first thing for members of planning commissions and zoning boards of appeal to recognize is that a good zoning decision is full of the possibility of long-lasting, great achievement. Poor zoning decisions, on the other hand, often establish protracted conflict and result in a diminished quality of health, safety, and welfare.

There are two pieces in the zoning puzzle:

- **A zoning text**
- **A zoning map**

Zoning Text

The zoning text explains the rules that apply to each of the districts. These rules typically establish a list of land uses that govern lot size, height of building, required yards and setbacks from front property lines, and so forth. (If a use is not permitted in a district, it is generally prohibited unless allowed under special circumstances).

In the zoning text, each zoning district is typically organized around the following scheme. First, there is a

statement of public purpose or intent that relates specifically to the district.

The second segment includes **a list of land uses that are permitted in the district** and **a list of land uses that may be permitted under special conditions.**

The zoning ordinance consists of a zoning text and a zoning map

The third **segment sets forth the rules that apply to each of the permitted uses or conditional uses that are provided for in that district.** Each of these special uses must be treated as a unique case. To do so requires the careful evaluation of the proposed use itself as well as the particular site under consideration.

The Zoning text includes a statement of intent specific to each district, a list of uses permitted in each district and a list of "special" or "conditional" uses permitted in each district

So what's an example of a special use? For example, a city has a zoning district that is called "residential suburban." It is designed for single-family detached homes on lots with a minimum size of 7,200 sq. ft. Single-family homes are, of course, a permitted use in this district. But there are special uses such as convalescent homes, day care facilities , commercial stables, and agricultural uses. these are special uses because they may or may not belong in a specific neighborhood. Consider, for example, the special use "convalescent home." In a typical subdivision, a large convalescent home on a small lot would likely lead to land-use conflicts due to increased traffic around the clock, late night/early morning emergency vehicle operation, and outdoor lighting. Such a use would not be appropriate. However, if the proposed convalescent home were located on a large estate carefully screened from its neighbors and with good access drives, the special use permit may be appropriate.

Zoning Map

The zoning map simply illustrates how the entire area of a community is classified and divided up into distinct zoning districts. Every parcel of land within the community may be identified as being at least in one zoning district. The common zoning districts are residential, commercial, industrial, and agricultural.

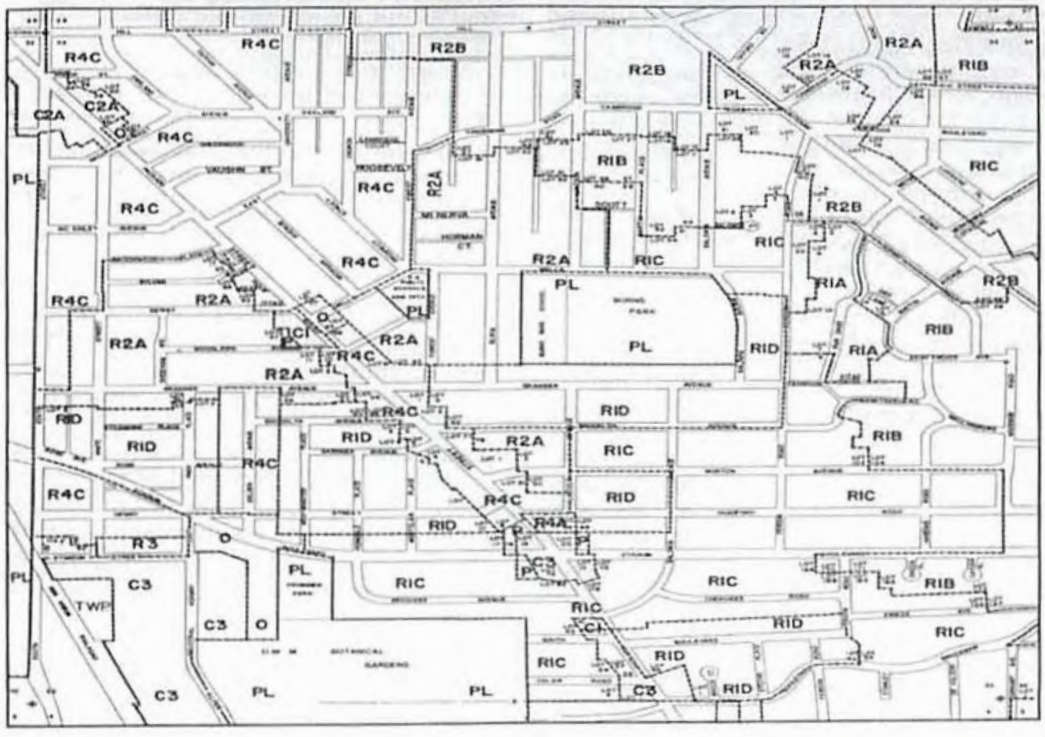

Typical Zoning Map

Subdivision Regulations

Subdivision regulations provide standards for dividing land into separate parcels. Subdivision regulations deal with converting vacant land into land uses

The municipal and county authorization for the regulation of subdivisions is based on state enabling legislation. While the enabling legislation is usually stated in general terms, local jurisdictions are authorized to provide detailed and extensive rules and procedures for regulating subdivisions.

Subdivision" means the division of land into three or more lots, parcels, tracts, tiers, blocks, sites, units, or any other division of land; and includes establishment of new streets and alleys, additions, and resubdivisions; and, when appropriate to the context, relates to the process of subdividing or to the lands or area subdivided.

Subdivision regulations and zoning ordinances are the most important local land -use control mechanisms. One way of differentiating the two - think of zoning as an ordinance that controls what can be on a lot that was created through subdivision regulations.

Subdivision regulation (1) legally defines land parcels to facilitate the transfer of title, (2) ensures that public infrastructure is provided and meets minimum standards, (3) ensures that new development properly relates to its surroundings, (4) ensures that land is developed consistent with the Comprehensive Plan

Subdivision regulations provide standards and a set of procedures for dividing land into separate parcels. By regulating the subdivision of land, regulations provide a method for assuring minimum public safety and amenity standards. Subdivision regulations may be seen as those regulations that deal with converting vacant land into urban uses such as residential neighborhoods, shopping centers, and industrial parks.

The purpose of subdivision regulations is to protect future owners or occupants of newly developed land from unhealthy, unsafe, inadequate developments and to prevent current residents from footing the entire bill.

The original function of subdivision regulations was to accurately and legally define each parcel of land to permit transfer of the lots from one owner to another, and to allow each owner to be very clear about, and have legal claim to, exactly what is owned. This still remains a primary function of subdivision regulations.

From this original purpose, subdivision regulations have come to serve many other purposes. In addition to clearly defining parcels of land, subdivision regulations have an expanded purpose which includes:

- Ensuring that the land within the municipality or county is developed in a manner consistent with the Comprehensive Plan.

- Ensuring that the internal infrastructure of any new subdivision is built to minimum standards of health and safety. Also they ensure the provision of essential public services and functions with minimal long-term maintenance problems.

- Ensuring that developments are appropriately related to their surroundings, both by linking them to existing public facilities and by reducing their negative environmental impact. And, in some cases, to provide funds for off-site and on-site infrastructure and community facility development.

Subdivision regulations typically require an accurate drawing of new property lines on a document called a "plat," which was subsequently recorded at a county recorder of deeds office.

Design Standards and Improvement Requirements

The Land Development Regulation also establishes design standards and improvement requirements for development.

The following components are typically included:

- **Density and Intensity of Land Development.** The density or intensity of land development permitted within the jurisdiction is specified generally by reference to zoning districts. Residential density may be expressed in dwelling units per acre or indirectly regulated through a "minimum lot size" standard. Non-residential intensities are typically expressed as a Floor Area Ratio (FAR).

- **Height and Bulk Regulation.** While the nature of zoning has evolved over time, one prominent fixture of zoning that has undergone little change is the regulation of height and bulk. Height simply deals with the heights of structures that are permitted on a parcel. Bulk is a clumsy term that deals with the relationship between buildings on a parcel and the size of the parcel itself and is normally expressed by setbacks, maximum lot coverage, and

so forth.

- **Infrastructure Design and Improvement Standards.** The general dimensions and design standards for public infrastructure notably streets, water and sewer systems, drainage systems and other facilities typically associated with the subdivision process are prescribed.

- **Transportation System Standards.** Off-street parking standards, driveway and access design, and internal circulation standards are prescribed. Typically, parking standards vary by the land use, so that when a use is permitted in more than one zoning district, the parking requirements remain the same.

- **Stormwater Management/ Floodplain Protection** In Florida, the management of stormwater receives high priority and generally involves review by the respective Water Management District in addition to local government. This section of the LDR establishes the standards for local review and are often identical or similar to the rules of the Water Management District.

- **Protection of Environmentally Sensitive Lands.** Wetlands, wildlife habitat, aquifer recharge areas and other natural resources.

- **Wellfield Protection.** Specific rules governing land development in the vicinity of wellfields that supply potable water

- **Signs.** Signs are highly varied by type and size of land use. In this section of the ordinance, sign regulations are established for each of the land-use districts and often include restrictions on size, location, height, projection, lighting, and so forth.

- **Landscaping.** Requirements for landscaping including rules pertaining to fences or walls.

- **Architectural and Design Guidelines.** Design standards typically applied to specifically identified areas such as historic districts or to development types such a large scale retail.

- **Supplemental Standards for Special Uses.** Standards applied to determine if Special or Conditional uses are permissible in various zoning districts.

Concurrency – Adequate Public Facilities

Florida law requires that adequate public facilities must be in place or programmed at the time development occurs. This provision is referred to as "concurrency".

The key provisions are:

....development orders shall not be issued unless public facilities and services which meet or exceed the adopted level of service standards are available concurrent with the impacts of the development. Unless public facilities and services which meet or exceed such standards are available at the time the development permit is issued, development orders shall be specifically conditioned upon availability of the public facilities and services necessary to serve the proposed development.

The following public facilities are subject to concurrency on a statewide basis i.e. mandatory:

- **sanitary sewer**
- **solid waste**
- **drainage,**
- **potable water,**

The local Comprehensive Plan must establish levels of service for purposes of managing concurrency.

The application of concurrency is optional for

- **transportation**
- **public schools**
- **parks and recreation**

If concurrency is to be applied by local governments for optional elements, levels of service must be established in the Comprehensive Plan and it must be demonstrated that levels of service can be reasonable met.

Planned Unit Development

Planned development provisions – typically referred to as "planned unit developments" or simply "planned developments" - are included in most land development codes. The provisions are intended to encourage more creative and imaginative design than generally is possible under conventional land development regulations. The procedures allow a specific plan to be submitted and, if approved, to serve as the basis for the land development regulations pertaining to that property i.e. the planned development restrictions substitute for the conventional standards.

Planned development provisions are included in most land development codes to encourage better design.

Under this procedure, project-specific plans – if approved by the jurisdiction – substitute for conventional land development regulations.

The advantages of this approach are obvious. The developer has significantly greater flexibility especially for larger properties and projects that involve multiple uses and utilize clustering to preserve open space and environmental lands.

Planned developments can also more effectively accommodate special conditions such as the buffering of adjoining neighborhoods or the phasing of infrastructure improvements.

The designation of a property as a "PD" is an amendment to the zoning map i.e. a "rezoning". PD's also involve a "zoning text" amendment by the inclusion of regulations specific to the property and that implement the specific plan.

Traditional Neighborhood Development

In recent years, Traditional Neighborhood Development or TND has emerged in response to the practices of land segregation and auto-dependent design inherent in the conventional aspects of land development regulation. This form of development encourages mixed-use, compact development, walkability, and interconnected street systems with residences, shopping, employment and recreational uses within close proximity to each other.

Many land development codes now contain regulations designed to implement these concepts. Unlike conventional zoning and subdivision regulation, these regulations require that (1) uses be mixed rather than segregated, (2) the street system be interconnected, (3) buildings especially within and near commercial area be placed close to the street and (4) that parks and open space by open and accessible to the public. Such

ordinances will rely less a zoning "by use" in favor of zoning "by building type". An emphasis is also placed on design in particular the massing and scale of buildings and their relationship to the street and public spaces.

Traditional Neighborhood Development may be incorporated into land development codes in a variety of ways. In some cases, they may take the form of zoning districts (a downtown main street or historic district) and in other cases be offered as an option to conventional development through a planned development approach.

Traditional Neighborhood Development (TND) encourages mixed use, compact development, walkability, and interconnected street systems with residences, shopping, employment and recreational uses in close proximity to each other.

Special Uses

Special uses – sometimes referred to as "special exceptions", "conditional uses" or "provisional uses" – are permitted within specified zoning districts provided that prescribed conditions are met. The manner in which "special uses" are applied varies widely among jurisdictions and can represent a broad range of regulation within a single community. Consequently, there is no universal process for the approval of "special uses", their review will fall into one of three categories:

- **administrative approval** typically involving staff review and approval in the form of a permit. This category normally involves very straightforward conditions leaving little room for interpretation. For example, a church may be permitted in a residential area but with the required minimum lot size is larger than the minimum lot size required for a single-family residence. Such actions do not require public notice nor public hearings.

- **approval by appointed body.** Special uses that involve a degree of discretion are often decided by a planning commission, board of adjustment, zoning board, historical review board, hearing officer or other body authorized by the land development code. Compatibility with the surrounding neighborhood and the potential impact of the special use and traffic and the environment are typical issues to be considered by the approving body. Notice to the public and adjoining property owners is generally required and decisions are made on the basis of staff recommendations and the findings obtained at

a public hearing.

- **approval by governing body.** Special uses that are highly complex or have a potential for significant impact require approval by the city or county commission. Although these approvals are not technically considered "rezonings", they will normally follow the same procedure. For example, "borrow pits" may be permitted as a special use in an agricultural zone. Because such facilities have the potential for significant environmental harm and are potentially disruptive to surrounding uses, they may be afforded a higher level of public scrutiny.

Special uses are permitted within zoning districts provided certain prescribed conditions are met. Planning officials may be serve in a recommending capacity or be delegated the approval authority for special uses depending on the jurisdiction's land development code.

The Administration Section of the Land Development Code is especially important for Planning Officials. This section describes their role in the Development review process, outlines the steps to be followed and clarifies the criteria to be used for decision-making.

Administration and Procedures

The Administration portion of the Land Development Code describes the administrative procedures, to be applied and establishes the roles and responsibilities of planning officials—both elected and appointed – and the roles and responsibilities of administrative personnel such as the planning director, zoning administrator and others. This is an important section of the Land Development Code since it: (1) details the work or job of the key actors in the development review process, (2) outlines the exact steps that must be taken in carrying out the work, and (3) clarifies the criteria that planning commissioners, zoning board members, zoning administrators, and elected officials must use in making development decisions.

The administration of the Land Development Code involves two types of decisions: ministerial and quasi-judicial.

The vast majority of land development decisions are ministerial and are made by administrative personnel such as the zoning administrator or other administrative officials. These duties involve the direct application of the provisions of the LDR to specific development applications normally in the form of permits (building permits, sign permits, etc.) Typically these decisions allow very little discretion or involve professional discretion within the administrator's field of expertise (for example, the extent of a wetland, compliance with an engineering standard, etc).

The decisions made by Planning Officials will be predominately "quasi-judicial" (there is no reason for decisions that involve no discretion should be placed before a board or commission).

Rezoning

The amendment of the zoning map – generally referred to as **rezoning** - is perhaps the most common decision before planning officials. Typically these decisions involve a change in the zoning designation for a particular property e.g. a rezoning from residential to commercial.

The administration section of the Land Development Code will prescribe the procedures to be followed in

processing a rezoning or special use approval. This process will normally include the following steps:

- a pre-application meeting with the staff (this meeting may be required or may be informal)
- a formal application for rezoning (or other action) notice to the public and to affected property owners
- a professional review and recommendation
- a public hearing and recommendation by the Planning Commission (or hearing officer)
- a public hearing by the governing body.

Rezoning is an amendment of the Zoning map and its approval requires an action of the governing body.

Planning officials often serve an important role as a recommending agency.

It is important to remember that rezoning decisions in Florida are "quasi-judicial". At the same time they are often very controversial and the tendency to respond through emotion or personal preference can be very strong. So what are the right questions to ask? Here are some suggestions.

- Is the proposed rezoning consistent with the comprehensive plan and its land-use plan map? If not, should the Comprehensive Plan be modified before the rezoning proceeds. If the rezoning is consistent, proceed.

- Any rezoning will affect other zoning districts. Identify all abutting zoning districts and ask yourself if the proposed rezoned area is generally compatible with surrounding districts. A useful technique here is to compare lists of the permitted and special uses in each district.

- Often an applicant will seek a specific map amendment for the purpose of operating one specific type of business. Be careful. When you approve a rezoning you are approving *any* of the permitted uses for that district, and you are opening the door for any of the special uses for that district. It is poor practice to approve a rezoning for the purpose of allowing a particular permitted use unless one is fully prepared to accept any of the permitted or special uses for that newly rezoned area.

While land use generally changes slowly over time, land uses do change, and rezoning is a fact of planning life. There are new technologies, shifting lifestyles, and long-term economic forces that lead to changes of the zoning. Remember that planning matters first, zoning second. In considering a rezoning, ask yourself wheth-

er this application represents a substantive shift in land -use planning. If there have been several such applications, it is likely that the matter needs to be considered first in the context of the comprehensive plan.

Variances

A variance is a minor exception to the zoning rules that if granted by proper authority, allows an applicant to do what could not otherwise be legally done. The key phrase is *minor exception*.

Typical zoning rules are spelled out so that an applicant either meets the zoning rules or does not. A lot either meets the minimum lot size specified in the zoning ordinance or it does not. A building height is either at or below the maximum zoning height or it is not.

A "variance" is a minor adjustment to the provisions of the land development code. To be granted, its must meet certain prescribed criteria enunciated in the code

Variances, or minor exceptions to the zoning rules, are designed to deal with the myriad cases in which some proposal nearly or just about meets the zoning rules, but not quite. Obviously, it would be unreasonable, in most cases, to reject a zoning application featuring, say, a lot size of 8,499 sq. ft. In a zone requiring a minimum lot size of 8,500 sq. ft. The variance process allows you to grant minor relief from strict zoning standards under specific conditions.

Evaluating Variances

Your Land Development Code should spell out both the process that must be used in treating variances and the standards that must be used in evaluating variances. The process used in treating variances is usually spelled out in great detail and must be followed to the letter.

The standards for evaluating variances are also spelled out but they often leave considerable room for interpretation. Since the substance of the normal variance application is usually close to meeting zoning standards, the question becomes, how close is it to meeting those standards?

What are some typical standards and things to consider? While there are differences between states, the overriding theme is this: variances may be granted only for minor changes to zoning standards.

The word "minor" means small, almost trivial, changes to the zoning standards. Thus, variances cannot be given to "uses" within districts-that is, if some use is not a permitted or special use in a zoning district, then the variance procedure cannot be used to allow a use that would otherwise be prohibited. In addition to this theme of minor changes, there are other common considerations.

- Unique: The hardship caused by zoning standards is unique to the property and is not shared by neighbors and other similar properties.
- Effect: The effect of the zoning standards is to deny a property owner reasonable use of the property.
- Self-imposed: The applicant did not bring the burden upon himself or herself through some action, but instead had the burden imposed upon them.
- Consequence: The variance should not be nonconforming, nor should it be used to allow a nonconforming land use or parcel to continue.

In addition to these common considerations, local officials should also consider whether the applicant has shown that:

- The variance would comply with the statement of public purpose or intent for the zoning ordinance generally and the zoning district under consideration specifically.
- The variance will not harm nearby properties.
-
- The variance will not harm people associated with nearby properties.
- The variance will not change the character of the nearby area.
- The variance is the minimum necessary to permit reasonable use of the property.

Nonconforming Uses and Lots

Zoning ordinances are adopted to bring order, stability, and predictability to land uses within a community.

This doesn't happen overnight because new zoning rarely, if ever, starts with a clean slate-some development preceded it. This means that as soon as the ordinance is adopted, the problem of nonconformance exists.

Nonconformance may also be created when a community rezones from one district to another. In either case, the new zoning creates nonconformities because something preexisting does not comply with new limitations on use (e.g. residential only) or dimensions (e.g. minimum lot size or width).

Nonconformities (uses and dimensions) are often created when land development codes are adopted or amended. If the condition preexisted, it creates a "legal" nonconformity.

The land development code will contain provisions describing the treatment of nonconformities.

This nonconformity occurs in two primary ways- first, **a "use" nonconformity** may occur when someone is using the land for a purpose that is not permitted in the relevant zoning district. For example, in a newly zoned residential area, there may be a barber shop or diner, neither of which is permitted in a residential district. Thus the barber shop or diner would be a nonconforming use. Indeed, any use that is not permitted in the district by right or a special! conditional use is a nonconforming use. If the use is otherwise legal (i.e. not violating some other law), **it is a legal nonconforming use.**

In the same residential district, there are two homes on lots that have 30-foot front yards instead of the 40 feet required for the zoning district.

These two lots are nonconforming. Each parcel in our community must meet all of the zoning standards governing such things as lot size, lot width, lot depth, and setbacks, or the lot becomes legally nonconforming. So we have two basic types of nonconformance: nonconforming uses and nonconforming lots.

What's to be done about these legally nonconforming uses and lots? Generally, the following rules underpin the treatment of non-conformities.

Rule 1: Don't let them expand.

Rule 2: Help them contract.

Rule 3: Avoid deterioration by encouraging maintenance and repair.

Rule 4: No stops and starts.

Remember, for a legal nonconforming situation to occur, the use or lot must be nonconforming and legal at the time the zoning ordinance was first adopted or later amended. Anything else is a zoning violation.

Subdivision Review

The subdivision process typically includes the following **three steps: (1) pre-application conference (often with sketch plan), (2) preliminary plat submission, and (3) final plat submission.** This process results in the recording of a final plat - defined as the map of the development identifying the location and boundaries of streets' rights-of-way, individual lots or parcels, and other site information.

Although most jurisdictions utilize these three steps, the review and approval process can vary widely. The only absolute requirement is that **the governing body accept the final plat and by so doing accept dedication of roadways, water and sewer systems and other public facilities. They may delegate other aspects of the review to their professional staff and/or to an appointed body**. Planning commissions have traditionally played an important role in subdivision review.

Frequently a distinction is made between "minor" and" major" subdivisions based on the number of parcels or some other criteria, in which case a streamlined process may be allowed. The following example illustrates the differences:

- Minor Subdivision. Any subdivision containing not more than three lots fronting on an existing street, not involving any new street or road, or the extension of municipal facilities or the creation of any public improvements, and not adversely affecting the remainder of the parcel or adjoining property, and not in conflict with any provision or portion of the master plan, official map, zoning ordinance, or these regulations.

- Major Subdivision. All subdivisions not classified as minor subdivisions, including but not limited to subdivisions of four or more lots (or some other threshold established by the LDR), or any size subdivision requiring any new street or extension of the local government facilities or the creation of

any public improvements.

Each city and county must ensure that adequate facilities are in place to support development.

Fiscal management and the financing of infrastructure to support anticipated growth are important planning issues.

Fiscal Tools

The planning process must concern itself with fiscal matters in addition to its regulatory role. Every growing community must be concerned about how it will pay for the roads, water and sewer systems, drainage systems, recreation facilities, fire and police stations, schools and public buildings it will need to support its growth.

As previously discussed, each city and county must have a "concurrency management system" to assure that adequate facilities are in place to support development. This system is based on "levels of service" specified in the comprehensive plan and it is closely tied to fiscal management tools and techniques utilized by local government.

In the fiscal arena, the *planning official* needs to have a general knowledge of the primary fiscal tools and techniques related to planning and growth management.

- **Capital improvement programs** and the **capital improvement element**
- **Development impact fees**
- **Fiscal impact analysis**
- **Development agreements**
- **Community development districts**

Capital Improvements Programming

The *capital improvements program (CIP)* is the multi-year scheduling of public infrastructure (physical improvements). The scheduling is based on assessments of need and community priorities for specific improvements to be constructed for a period of five or six years into the future. The CIP is typically accompanied by a *capital improvements budget* including facilities to be constructed in the next fiscal year. These documents are adopted for a local government as part of their budget process.

Major transportation improvements normally have their genesis at the Metropolitan Planning Organization (MPO) level in the form of a Transportation Improvement Program (TIP). MPO's offer a regional perspective

and exist to plan and coordinate a regional approach to mobility. Local government CIPs will generally reflect the TIP with regard to transportation.

The Capital Improvements Element (CIE) links the comprehensive plan to CIP. The CIE is a required element of the comprehensive plan. The Community Planning Act provides as follows:

- *.....The comprehensive plan shall contain a capital improvements element designed to consider the need for and the location of public facilities in order to encourage the efficient utilization of such facilities and set forth:*
- *.....[will include] a component which outlines principles for construction, extension, or increase in capacity of public facilities, as well as a component which outlines principles for correcting existing public facility deficiencies, which are necessary to implement the comprehensive plan. The components shall cover at least a 5- year period.*
- *.....[will include] estimated public facility costs, including a delineation of when facilities will be needed, the general location of the facilities, and projected revenue sources to fund the facilities.*
- *.....[will include] Standards to ensure the availability of public facilities and the adequacy of those facilities including acceptable levels of service.*
- *.....[will include] A schedule of capital improvements which includes publicly funded projects, and which may include privately funded projects ..... necessary to ensure that adopted level-of-service standards are achieved and maintained. For capital improvements that will be funded by the developer, financial feasibility shall be demonstrated by ... an enforceable development agreement ...*
- *The schedule must include transportation improvements included in the applicable metropolitan planning organization's transportation improvement program to the extent that such improvements relied upon to ensure concurrency and financial feasibility. The schedule must also be coordinated with applicable metropolitan planning organization's long -range transportation plan.*

Development Impact Fees

Development impact fees are scheduled charges applied to new development to generate revenue for the construction or expansion of capital facilities located outside the boundaries of the new development (off-site) that benefit the contributing development

Development impact fees are scheduled charges applied to new development to generate revenue for the construction or expansion of capital facilities located outside the boundaries of the new development (off-site) that benefit the contributing development. Impact fees are generally imposed as a condition for development approval. As such, they fall within the general system of land development regulation as contrasted with revenue-raising (taxation) programs.

In Florida, development impact fees are widely used. They are closely linked with "concurrency" and are assessed for a variety of capital facilities including roads, water and sewer, parks and recreation, fire and EMS, law enforcement, public buildings and schools.

In Florida, there is no specific state statute directly authorizing their use or governing their application. Rather, the application of development impact fees has arisen as a legitimate exercise of government through case law. The Florida Supreme Court found that development impact fees are permissible provided that:

1. There must be a reasonable connection between the need for additional facilities and the growth resulting from new development.

2. The fees charged must not exceed a proportionate share of the cost incurred or to be incurred in accommodating the development paying the fee.

3. There must be a reasonable connection between the expenditure of the fees collected and the benefits received by the development paying the fees.

Fiscal Impact Analysis

***Fiscal Impact Analysis Model (FIAM)* is available for application by local government for planning and land use decisions.**

In 2002, the Florida Department of Community Affairs commissioned the development of a *Fiscal Impact Analysis Model* (FIAM) designed to improve local government land use decision-making. The model provides a tool to quantify the fiscal impact (cost and revenue effects) of land use decisions. The model is available for application by local governments.

Development Agreements

Local governments may enter into *development agreements* with land owners for public improvements and other conditions associated with land developments. These agreements may be in force for up to 30 years during which time the developer is vested against regulatory changes.

A local government may enter into *development agreements* with landowners or developers for the provision of infrastructure or other actions of public benefit related to a land development. These agreements are typically associated with large scale development and are created during the development review process.

The local government must establish procedures and requirements for development agreements before this technique may be applied. At a minimum the development agreement must include the following:

- the duration of the agreement (a maximum of thirty years),
- the development uses permitted
- the public facilities to be provided
- the lands to be dedicated or reserved for public use
- a listing of permits approved and/or needed
- a finding of consistency with the comprehensive plan
- a description of terms and conditions

The development agreement has several advantages. For the community, the public improvements, land dedications and conditions associated with a large development can be contractually committed. This approach supplements the regulatory requirements and is generally easier to enforce and manage. The developer gets certainty but most importantly is vested against changes in regulations for the duration of the agreement.

Community Development Districts

Florida has enabled the creation of community development districts (CDDs) that can provide number of

Community Development Districts **are frequently used in Florida to provide a broad range of facilities and services to new development.**

CDD's require local government consent and are typically created during the development review process for large scale projects.

services usually associated with large new developments, including the construction and operation of systems for water supply, wastewater management, stormwater management, streets, and street lighting. With the consent of the local governing body, the district might also provide recreational facilities, fire protection, school buildings, security facilities and services, solid waste management, and mosquito control. CDDs have been able to respond to pressures of growth that have strained the economic and growth management capacities of Florida's local governments.

Because CDD's require the consent of the local government and are normally associated with new development, planning officials are likely to encounter this particular type of special district.

Infill and Revitalization

The Florida Legislature has recognized that

- fiscally strong urban centers are beneficial to regional and state economies and resources and for the reduction of future urban sprawl.
- health and vibrancy of the urban cores benefit their respective regions. Conversely, the deterioration of those urban cores negatively impacts the surrounding area.
- respective governments need to work in partnership with communities and the private sector to revitalize urban centers.
- state urban policies should guide in preserving and redeveloping existing urban cores and promoting the adequate provision of infrastructure, human services, safe neighborhoods, educational facilities, and economic development to sustain these cores
- infill development and redevelopment are recognized to be important components and useful mechanisms for promoting and sustaining urban cores.

The Florida Legislature has recognized that healthy urban centers are beneficial and has established mechanisms that promote infill and facilitate redevelopment.

Florida statutes provide two important techniques for addressing infill and redevelopment: (1) Community Redevelopment Areas and (2) Urban Infill and Redevelopment Areas.

Community Redevelopment Areas

The Community Redevelopment Act of 1969 grants unique Powers to local government to facilitate redevelopment of urban areas

The Community Redevelopment Act of 1969 authorizes the primary redevelopment powers for Florida cities and counties. These unique redevelopment powers include;

- The ability to buy property for resale to another private person or organization. When land use patterns or construction do not allow for modern use and development, the authority may acquire properties for consolidation or reconfiguration to enable private, market-based development to occur. No other local public agencies are so directly and actively involved in the private real estate market.

- The authority to use the power of eminent domain (condemnation) to acquire private property. Eminent domain is a powerful tool that redevelopment agencies use with great caution. Although every property is subject to governmental exercise of "eminent domain" for public purposes, redevelopment authority goes further by authorizing the use of this power to "take" private property, upon the paying of a fair market price. The agency may then resell the property to another private organization so long as the subsequent use carries out the redevelopment plan. This power is sparingly used in Florida because of its controversial nature and the high cost of condemnation.

- The power to collect property tax "increment" to finance redevelopment activities. A redevelopment agency has no power to levy a tax of any kind nor does it have any power to affect the distribution of property tax dollars. Rather, the property taxes within the defined "community redevelopment area" are frozen and the increase or "increment" of property taxes collected after that date may be diverted for redevelopment purposes.

Four steps are required to utilize the redevelopment powers authorized under the Community Redevelopment Act of 1969:

- **A community redevelopment area (CRA) must be established**. The powers granted under the act only apply within this prescribed area or district.

- There must be a **"finding of necessity".** The exercise the extraordinary powers granted for redevelopment, the local government must show that the need for redevelopment exists. The statutes contains a list of conditions that may meet this test and a detailed study is typically conducted to document the presence of these conditions within the redevelopment area.

- A **Community Redevelopment Authority** must be created to oversee the redevelopment activities.

- A **Community Redevelopment Plan** must be adopted before the redevelopment powers may be exercised.

Urban Infill and Redevelopment Areas

A local government may designate a geographic area or areas within its jurisdiction as an *urban infill and redevelopment area* for the purpose of targeting economic development, job creation, housing, transportation, crime prevention, neighborhood revitalization and preservation, and land use incentives to encourage urban infill and redevelopment within the urban core.

The Urban Infill and Redevelopment Plan is a powerful and comprehensive mechanism for the revitalization of urban areas.

This mechanism can include "community redevelopment areas" with the attendant redevelopment powers described previously but is intended as **a more comprehensive planning technique.** Its key elements include:

- **a collaborative and holistic community participation process** that encourages communities to participate in the design and implementation of the plan, including a "visioning" of the urban core. This process requires the ongoing involvement of stakeholder groups including community-based organizations, neighborhood associations, financial institutions, faith organizations, housing authorities, financial institutions, existing businesses, businesses interested in operating in the community, schools, and neighborhood residents. In addition, the neighborhood participation process must include a governance structure whereby the local government shares decisionmaking authority with communitywide representatives.

- **an urban infill and redevelopment plan** that demonstrates the local government and community's commitment to comprehensively address the urban problems. This plan must:

  - identify activities and programs to accomplish locally identified goals such as code enforcement; improved educational opportunities; reduction in crime; neighborhood revitalization and preservation; provision of infrastructure needs, including mass transit and multimodal linkages; and mixed-use planning to promote multifunctional redevelopment to improve both the residential and commercial quality of life in the area.

- identify enterprise zones, community redevelopment areas, community development corporations, brownfield areas, downtown redevelopment districts, safe neighborhood improvement districts, historic preservation districts, and empowerment zones or enterprise communities
- execute a memorandum of understanding with the district school board regarding public school facilities
- identify each neighborhood within the proposed area
- identify how the local government and community-based organizations intend to implement affordable housing programs and reduce crime.
- **provide guidelines for the adoption of land development regulations**
- **financial and regulatory incentives.** The urban infill and redevelopment plan must also identify financial and regulatory incentives such as the *waiver of license and permit fees, exemption of sales made in the urban infill and redevelopment area from local option sales surtaxes, waiver of delinquent local taxes or fees, expedited permitting, lower transportation impact fees, prioritization of infrastructure spending, and local government absorption of developers' concurrency costs.*

Growth Management Techniques

Urban Service Areas

Many Florida Communities designate *urban service areas* in their comprehensive plans. The urban service area boundaries Represent the outer limits of urban development over the planning period and include enough land to accommodate anticipated growth

Urban service areas refers to those areas in and around existing communities which are deemed most suitable for urban development and capable of being provided with a full range of urban services. Urban service areas are typically designated by the comprehensive plan.

Urban services include the public services normally provided or needed in urban areas. Transportation facilities, public water supply and distribution systems, sanitary sewerage systems, higher levels of police and fire protection, solid waste collection, urban stormwater management systems, recreation facilities, schools and public buildings all require public investment to maintain levels of service as an urban area expands.

The urban service area boundaries represent the outer limits of planned urban growth over the long-term planning period and include enough to accommodate anticipated growth.

Local governments that adopt an urban service boundary in combination with a community vision may adopt comprehensive plan amendments (within the designated area) without state or regional review. Developments within the urban service boundary are also exempt from DRI review.

Cluster development can preserve open space and natural resources while reducing development costs .

Clustering – On-Site Density Transfer

Clustering or "on-site density transfer" relocates development away from a particularly sensitive portion of the site to a location more capable of accommodating development impacts. The rationale for cluster development is grounded in environmental and economic concerns. When clustering is permitted, development is placed on that portion of the land parcel that can be developed with the least disturbance. At the same time, developers realize significant savings because shorter roads and utility extensions are required to serve the clustered homes. The advantages of clustering can be achieved at any scale.

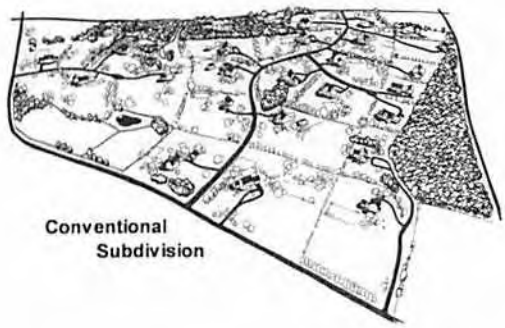

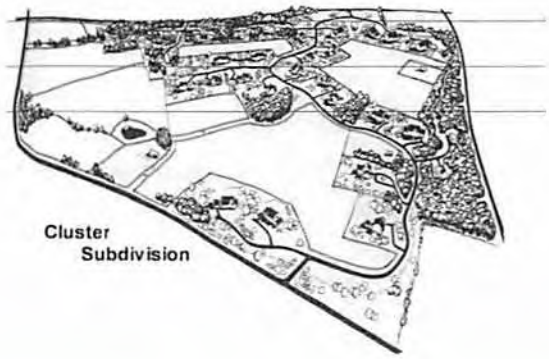

The 'transfer of Development rights" (TDR) allows the transfer of development rights from "sending areas" to "receiving areas" through a real estate market transaction. This technique Allows the market to furnish "fair compensation" for rights relinquished through regulatory restrictions

Transfer of Development Rights

The Transfer of Development Rights (TDR) concept allows landowners in restricted areas (or "sending areas") to transfer densities and other development rights to landowners in areas appropriate for higher densities (or "receiving areas").

The usual purpose of TDRs is to ameliorate the harshness of regulatory restrictions. TDRs give planners an alternative to purchasing the land outright or abandoning any attempt to enforce carrying capacity by allowing the market to furnish "fair compensation" for rights relinquished through regulatory restrictions.

Once a landowner sells or transfers the rights for development to another landowner, the land becomes open space at no cost to the local government. The owner is permanently barred from ever building commercial or residential developments on that land, with the same restraint applying to the landowner's heirs or transferees.
There are two basic types of TDR programs. The most

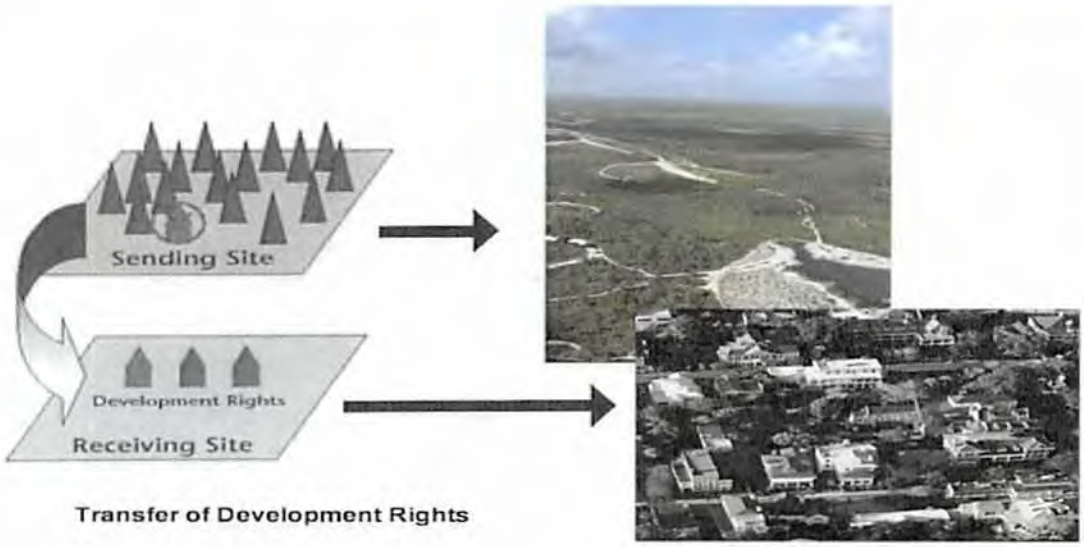

Transfer of Development Rights

common allows the landowner to sell development rights on a piece of property in a sending zone to a developer who then increases the density on another piece of property in the receiving zone (for example, going from one unit per acre to four units per acre). The higher the density that developers are able to realize, the greater the incentive for them to buy development rights.

A second method allows a local government to establish a TDR bank. In this method, property owners who wish to develop at a higher density purchase development rights from the TDR bank, often administered by the local government. The local government can then use these funds to purchase development rights of properties in areas that it wants to protect from urban development.

Rural Land Stewardship Areas provide a mechanism for the establishment of "transfer of development right (TDR) programs for the preservation of rural areas

Rural Land Stewardship

Rural land stewardship areas are designed to establish a long-term incentive based strategy to guide the allocation of land to accommodate land uses in a manner that protects the natural environment, stimulates economic growth, and diversification, and encourages the retention of agriculture and other rural land uses.

Economic and regulatory incentives are provided to landowners outside of established urban areas to conserve and manage vast areas of land (no less than 10,000 acres) for the benefit of the state's citizens and natural environment while maintaining and enhancing the asset value of their landholdings.

The process is initiated by written request of landowners or a private sector initiated amendment to the local government.

The local government may propose a future land use overlay to designate a rural land use stewardship area . The plan amendment designating a rural land stewardship area is subject to the state coordinated plan review process and shall provide criteria for the designation of receiving areas, a process for the implementation of planning and development strategies that provide for a functional mix of land uses, and a mix of densities and intensities that would not be characterized as urban sprawl.

Upon the adoption of a plan amendment creating a ru-

ral stewardship area, the local government must establish a rural land stewardship overlay zoning district which shall provide the methodology for the creation, conveyance, and use of stewardship credits.

Sector Plans

Sector Plans provide a conceptual overlay plan for an area. These plans when adopted under an agreement with the State may substitute for the DRI approval process.

The Sector Plan process was established as an alternative to the Development of Regional Impact (DRI) process. The Sector Plan is based on the long-range conceptual master plan for a designated area. Sector plans are intended for substantial geographic areas including at least 15,000 acres of one or more local governmental jurisdictions and are to emphasize urban form and protection of regionally significant resources and facilities.

Sector planning encompasses two levels: a conceptual long-term master plan within the comprehensive plan and detailed specific area plans that implement the conceptual long-term master plan and authorize issuance of development orders.

The long-term master plan and detailed specific area plans may be based on planning periods longer than the planning period in the local comprehensive plan and are not required to demonstrate land use need through the planning periods.

Local development orders approving detailed specific area plans must submitted to DCA, based on the procedures for a DRI development order. The development order for a detailed specific area plan establishes a date by which the local government agrees not to downzone the property or to reduce the density or intensity of development.
Upon approval of the long-term master plan for the Sector:

- the Metropolitan Planning Organization long-range transportation plan must be consistent with the long-term master plan;
- the water supply projects shall be incorporated into the regional water supply plan;
- a landowner may request a consumptive use permit for the long-term planning period.

Sector Plans provide a conceptual overlay plan for an area. These plans when adopted under an agreement with the State may substitute for the DRI approval process.

Appendix A: Definitions

Administration commission means the Governor and the Cabinet.

Amendment means any action of a local government which has the effect of amending, adding to, deleting from or changing an adopted comprehensive plan element or map or map series.[1]

Capital budget means the portion of each local government's budget which reflects capital improvements scheduled for a fiscal year.[2]

Capital improvement means physical assets constructed or purchased to provide, improve or replace a public facility and which are large scale and high in cost. [3]

Capital improvement program (CIP) means the multiyear scheduling of public infrastructure

Clustering means the grouping together of structures and infrastructure on a portion of a development site.[4]

Coastal area means the 35 coastal counties and all coastal municipalities within their boundaries designated coastal by the state land planning agency.[5]

Community development district means a local unit of special-purpose government which is created pursuant to this act and limited to the performance of those specialized functions authorized by this act; the boundaries of which are contained wholly within a single county; the governing head of which is a body created, organized, and constituted and authorized to function specifically as prescribed in this act for the delivery of urban community development services; and the formation, powers, governing body, operation, duration, accountability, requirements for disclosure, and termination of which are as required by general law.[6]

Compatibility means a condition in which land uses or conditions can coexist in relative proximity to each other in a stable fashion over time such that no use or condition is unduly negatively impacted directly or indirectly by another use or condition. [7]

Concurrency means that the necessary public facilities and services to maintain the adopted level of service standards are available when the impacts of development occur. [8]

Concurrency Management System means the procedures and/or process that the local government will utilize to assure that development orders and permits are not issued unless the necessary facilities and services are available concurrent with the impacts of development.[9]

Density means an objective measurement of the number of people or residential units allowed per unit of land, such as residents or employees per acre.[10]

Developer means any person, including a governmental agency, undertaking any development as defined Chapter 380.04 F.S. [11]

Development means the carrying out of any building activity or mining operation, the making of any material change in the use or appearance of any structure or land, or the dividing of land into three or more parcels.[12]

Development Impact fees are scheduled charges applied to new development to generate revenue for the construction or expansion of capital facilities located outside the boundaries of the new development (off-site) that benefit the contributing development.

"Development order" means any order granting, denying, or granting with conditions an application for a development permit. [13]

Development of Regional Impact means any development which, because of its character, magnitude, or location, would have a substantial effect upon the health, safety, or welfare of citizens of more than one county. Chapter 380.06 FS

Development permit includes any building permit, zoning permit, plat approval, or rezoning, certification, variance, or other action having the effect of permitting development as defined in this chapter. [14]

Environmentally sensitive lands means areas of land or water which are determined necessary by the local government, based on locally determined criteria, to conserve or protect natural habitats and ecological systems.[15]

Evaluation and appraisal report means an evaluation and appraisal report as adopted by the local governing body in accordance with the requirements of Section 163.3191, F.S.

Fiscal impact analysis means an assessment of the costs incurred and the revenues received by a local government (or other level or entity of government) as the result of a development approval or some other action.

Floor Area Ratio (FAR) means the gross floor area of all buildings or structures on a lot divided by the total lot area.

Goal means the long-term end toward which programs or activities are ultimately directed. [16]

Governing body means the board of county commissioners of a county, the commission or council of an incorporated municipality, or any other chief governing body of a unit of local government. [17]

Governmental agency means: [18]
(a) The United States or any department, commission, agency, or other instrumentality thereof;
(b) This state or any department, commission, agency, or other instrumentality thereof;
(c) Any local government, as defined in this chapter, or any department, commission, agency, or other instrumentality thereof;
(d) Any school board or other special district, authority, or other governmental entity.

Incentive zoning means the granting of additional development capacity in exchange for the developer's provision of a public benefit or amenity.

Inclusionary zoning means regulations that increase housing choice by the establishment of requirements and providing incentives for the construction of housing to meet the needs of low and moderate-income households.

Improvements may include, but are not limited to, street pavements, curbs and gutters, sidewalks, alley pavements, walkway pavements, water mains, sanitary sewers, storm sewers or drains, street names, signs, landscaping .....or any other improvement required by a governing body.[19]

Intensity means an objective measurement of the extent to which land may be developed or used, including the consumption or use of the space above, on or below ground; the measurement of the use of or demand on natural resources; and the measurement of the use of or demand on facilities and services. [20]

Land means the earth, water, and air above, below, or on the surface, and includes any improvements or structures customarily regarded as land. [21]

Land development regulation commission means a commission designated by a local government to develop and recommend, to the local governing body, land development regulations which implement the adopted comprehensive plan and to review land development regulations, or amendments thereto, for consistency with the adopted plan and report to the governing body regarding its findings. The responsibilities of the land development regulation commission may be performed by the local planning agency.[22]

Land development regulations include local zoning, subdivision, building, and other regulations controlling the development of land. [23]

Land use means the development that has occurred on the land, the development that is proposed by a developer on the land, or the use that is permitted or permissible on the land under an adopted comprehensive plan or land development code.[24].

Level of service means an indicator of the extent or degree of service provided by, or proposed to be provided by, a facility based on and related to the operational characteristics of the facility. Level of service shall indicate the capacity per unit of demand for each public facility. [25]

Local comprehensive plan means any or all local comprehensive plans or elements or portions thereof prepared, adopted, or amended pursuant to the Local Government Comprehensive Planning and Land Development Regulation Act, as amended.[26]

New town means a new urban activity center and community designated on the future land use map and located within a rural area or at the rural-urban fringe, clearly functionally distinct or geographically separated from existing urban areas and other new towns. A new town shall be of sufficient size, population and land use composition to support a variety of economic and social activities consistent with an urban area designation. New towns shall include basic economic activities; all major land use categories, with the possible exception of agricultural and industrial; and a centrally provided full range of public facilities and services.[27]

Objective means a specific, measurable, intermediate end that is achievable and marks progress toward a goal.[28]

Parcel of land means any quantity of land capable of being described with such definiteness that its location and boundaries may be established, which is designated by its owner or developer as land to be used or developed as a unit or which has been used or developed as a unit.[29]

Policy means the way in which programs and activities are conducted to achieve an identified goal.[30]

Public facilities means major capital improvements, including, but not limited to, transportation facilities, sanitary sewer facilities, solid waste facilities, water management and control facilities, potable water facilities, alternative water systems, educational facilities, parks and recreational facilities, health systems and facilities, and spoil disposal sites for maintenance dredging in waters of the state.[31]

Public utility includes any public or private utility, such as, but not limited to, storm drainage, sanitary sewers, electric power, water service, gas service, or telephone line, whether underground or overhead.[32]

Purchase of development rights means the acquisition of a governmentally recognized right to develop land which is severed from the realty and held or further conveyed by the purchaser. [33]

Regional planning agency means the agency designated by the state land planning agency to exercise responsibilities under this chapter in a particular region of the state.[34]

Revenue bonds means obligations which are payable from revenues derived from sources other than ad valorem taxes on real or tangible personal property and which do not pledge property, credit, or general tax revenue.[35]

Right-of-way means land dedicated, deeded, used, or to be used for a street, alley, walkway, boulevard, drainage facility, access for ingress and egress, or other purpose by the public, certain designated individuals, or governing bodies.[36]

Special district means a local unit of special purpose, as opposed to general-purpose, government within a limited boundary, created by general law, special act, local ordinance, or by rule of the Governor and Cabinet.[37]

State land development plan" means a comprehensive statewide plan or any portion thereof setting forth state land development policies.[38]

State land planning agency means the Florida Department of Community Affairs.[39]

Street includes any access way such as a street, road, lane, highway, avenue, boulevard, alley, parkway, viaduct, circle, court, terrace, place, or cul-de-sac, and also includes all of the land lying between the right-of-way lines as delineated on a plat showing such streets, whether improved or unimproved, but shall not include those access ways such as easements and rights-of-way intended solely for limited utility purposes, such as for electric power lines, gas lines, telephone lines, water lines, drainage and sanitary sewers, and easements of ingress and egress.[40]

Structure" means anything constructed, installed, or portable, the use of which requires a location on a parcel of land. It includes a movable structure while it is located on land which can be used for housing, business, commercial, agricultural, or office purposes either temporarily or permanently. "Structure" also includes fences, billboards, swimming pools, poles, pipelines, transmission lines, tracks, and advertising signs.[41]

Subdivision means the division of land into three or more lots, parcels, tracts, tiers, blocks, sites, units, or any other division of land; and includes establishment of new streets and alleys, additions, and resubdivisions; and, when appropriate to the context, relates to the process of subdividing or to the lands or area subdivided.[42]

Suitability means the degree to which the existing characteristics and limitations of land and water are compatible with a proposed use or development. [43]

Transfer of Development Rights means a governmentally recognized right to use or develop land at a certain density, or intensity, or for a particular purpose, which is severed from the realty and placed on some other property. [44]

Urban service area means those areas in and around existing communities which are deemed most suitable for urban development and capable of being provided with a full range of urban services. Urban service areas are typically designated by the comprehensive plan.

Water management district means a special taxing district which is a regional water management district created and operated pursuant to chapter 373 or chapter 61-691, Laws of Florida, or a flood control district created and operated pursuant to chapter 25270, Laws of Florida, 1949, as modified by s. 373.149.[45]

Endnotes for Definitions

[1] Rule 9J-5 FAC
[2] Rule 9J-5 FAC
[3] Rule 9J-5 FAC
[4] Rule 9J-5 FAC
[5] Chapter 163.3164 F.S.
[6] Chapter 190.003 F.S.
[7] Rule 9J-5 FAC
[8] Rule 9J-5 FAC
[9] Rule 9J-5 FAC
[10] Rule 9J-5 FAC
[11] Chapter 380.031 F.S.
[12] Chapter 380.04 F.S.
[13] Chapter 380.031 F.S.
[14] Chapter 380.031 F.S.
[15] Rule 9J-5 FAC
[16] Rule 9J-5 FAC
[17] Chapter 163.3164 F.S.
[18] Chapter 380.031 F.S
[19] Chapter 177.031 F.S.
[20] Rule 9J-5 FAC
[21] Chapter 380.031 F.S.
[22] Chapter 163.3164 F.S.
[23] Chapter 380.031 F.S.
[24] Chapter 163.3164 F.S.
[25] Rule 9J-5 FAC
[26] Chapter 380.031 F.S.
[27] Rule 9J-5 FAC
[28] Rule 9J-5 FAC
[29] Chapter 380.031 F.S
[30] Rule 9J-5 FAC
[31] Chapter 186.403 F.S.
[32] Chapter 177.031 F.S.
[33] Rule 9J-5 FAC
[34] Chapter 380.031 F.S.
[35] Chapter 190.003 F.S.
[36] Chapter 177.031 F.S.
[37] Chapter 186.403 F.S.
[38] Chapter 380.031 F.S.
[39] Chapter 380.031 F.S.
[40] Chapter 177.031 F.S.
[41] Chapter 380.031 F.S.
[42] Chapter 177.031 F.S.
[43] Rule 9J-5 FAC
[44] Rule 9J-5 FAC
[45] Chapter 186.403 F.S.

Appendix B: Acronyms

APA – American Planning Association

AICP – American Institute of Certified Planners

CIE – Capital Improvements Element

CIP – Capital Improvements Program

CNU – Congress for the New Urbanism

CRA – Community Redevelopment Authority or Community Redevelopment Area

DCA – Florida Department of Community Development

DEP – Florida Department of Environmental Protection

DRI – Development of Regional Impact

FAICP – College of Fellows: American Institute of Certified Planners

FAPA – Florida Chapter of the American Planning Association

FDOT - Florida Department of Transportation

FHBA – Florida Homebuilders Association

FIOG – Florida Institute of Government

FPZA – Florida Planning and Zoning Association

FQD – Florida Quality Development

LDR – Land Development Regulation. Synonymous with **ULDR** or **ULDC** sometimes used to indicate a "Unified Land Development Regulation" or "Unified Land Development Code"

MPO – Metropolitan Planning Organization. Synonymous with **TPO** sometimes used to indicate a "Transportation Planning Organization"

PUD – Planned Unit Development. Synonymous with **PDD** or **PD** sometimes used to indicate a "Planned Development District".

RPC - Regional Planning Council

TIP – Transportation Improvements Program

TND – Traditional Neighborhood Development

WMD – Water Management District

Appendix C: AICP Code of Ethics and Professional Conduct

Adopted March 19, 2005
Effective June 1, 2005

The Executive Director of APA/AICP is the Ethics Officer as referenced in the following.

We, professional planners, who are members of the American Institute of Certified Planners, subscribe to our Institute's Code of Ethics and Professional Conduct. Our Code is divided into three sections:

> Section A contains a statement of aspirational principles that constitute the ideals to which we are committed. We shall strive to act in accordance with our stated principles. However, an allegation that we failed to achieve our aspirational principles cannot be the subject of a misconduct charge or be a cause for disciplinary action.
>
> Section B contains rules of conduct to which we are held accountable. If we violate any of these rules, we can be the object of a charge of misconduct and shall have the responsibility of responding to and cooperating with the investigation and enforcement procedures. If we are found to be blameworthy by the AICP Ethics Committee, we shall be subject to the imposition of sanctions that may include loss of our certification.
>
> Section C contains the procedural provisions of the Code. It (1) describes the way that one may obtain either a formal or informal advisory ruling, and (2) details how a charge of misconduct can be filed, and how charges are investigated, prosecuted, and adjudicated.

The principles to which we subscribe in Sections A and B of the Code derive from the special responsibility of our profession to serve the public interest with compassion for the welfare of all people and, as professionals, to our obligation to act with high integrity.

As the basic values of society can come into competition with each other, so can the aspirational principles we espouse under this Code. An ethical judgment often requires a conscientious balancing, based on the facts and context of a particular situation and on the precepts of the entire Code.

As Certified Planners, all of us are also members of the American Planning Association and share in the goal of building better, more inclusive communities. We want the public to be aware of the principles by which we practice our profession in the quest of that goal. We sincerely hope that the public will respect the commitments we make to our employers and clients, our fellow professionals, and all other persons whose interests we affect.

A: Principles to Which We Aspire

1. Our Overall Responsibility to the Public

Our primary obligation is to serve the public interest and we, therefore, owe our allegiance to a conscientiously attained concept of the public interest that is formulated through continuous and open debate. We shall achieve high standards of professional integrity, proficiency, and knowledge. To comply with our obligation to the public, we aspire to the following principles:

a) We shall always be conscious of the rights of others.

b) We shall have special concern for the long-range consequences of present actions.

c) We shall pay special attention to the interrelatedness of decisions.

d) We shall provide timely, adequate, clear, and accurate information on planning issues to all affected persons and to governmental decision makers.

e) We shall give people the opportunity to have a meaningful impact on the development of plans and programs that may affect them. Participation should be broad enough to include those who lack formal organization or influence.

f) We shall seek social justice by working to expand choice and opportunity for all persons, recognizing a special responsibility to plan for the needs of the disadvantaged and to promote racial and economic integration. We shall urge the alteration of policies, institutions, and decisions that oppose such needs.

g) We shall promote excellence of design and endeavor to conserve and preserve the integrity and heritage of the natural and built environment.

h) We shall deal fairly with all participants in the planning process. Those of us who are public officials or employees shall also deal evenhandedly with all planning process participants.

2. Our Responsibility to Our Clients and Employers

We owe diligent, creative, and competent performance of the work we do in pursuit of our client or employer's interest. Such performance, however, shall always be consistent with our faithful service to the public interest.

a) We shall exercise independent professional judgment on behalf of our clients and employers.

b) We shall accept the decisions of our client or employer concerning the objectives and nature of the professional services we perform unless the course of action is illegal or plainly inconsistent with our primary obligation to the public interest.

c) We shall avoid a conflict of interest or even the appearance of a conflict of interest in accepting assignments from clients or employers.

3. Our Responsibility to Our Profession and Colleagues

We shall contribute to the development of, and respect for, our profession by improving knowledge and techniques, making work relevant to solutions of community problems, and increasing public understanding of planning activities.

a) We shall protect and enhance the integrity of our profession.

b) We shall educate the public about planning issues and their relevance to our everyday lives.

c) We shall describe and comment on the work and views of other professionals in a fair and professional manner.

d) We shall share the results of experience and research that contribute to the body of planning knowledge.

e) We shall examine the applicability of planning theories, methods, research and practice and standards to the facts and analysis of each particular situation and shall not accept the applicability of a customary solution without first establishing its appropriateness to the situation.

f) We shall contribute time and resources to the professional development of students, interns, beginning professionals, and other colleagues.

g) We shall increase the opportunities for members of underrepresented groups to become professional planners and help them advance in the profession.

h) We shall continue to enhance our professional education and training.

i) We shall systematically and critically analyze ethical issues in the practice of planning.

j) We shall contribute time and effort to groups lacking in adequate planning resources and to voluntary professional activities.

B: Our Rules of Conduct

We adhere to the following Rules of Conduct, and we understand that our Institute will enforce compliance with them. If we fail to adhere to these Rules, we could receive sanctions, the ultimate being the loss of our certification:

1. We shall not deliberately or with reckless indifference fail to provide adequate, timely, clear and accurate information on planning issues.

2. We shall not accept an assignment from a client or employer when the services to be performed involve conduct that we know to be illegal or in violation of these rules.

3. We shall not accept an assignment from a client or employer to publicly advocate a position on a planning issue that is indistinguishably adverse to a position we publicly advocated for a previous client or employer within the past three years unless (1) we determine in good faith after consultation with other qualified professionals that our change of position will not cause present detriment to our previous client or employer, and (2) we make full written disclosure of the conflict to our current client or employer and receive written permission to proceed with the assignment.

4. We shall not, as salaried employees, undertake other employment in planning or a related profession, whether or not for pay, without having made full written disclosure to the employer who furnishes our salary and having received subsequent written permission to undertake additional employment, unless our employer has a written policy which expressly dispenses with a need to obtain such consent.

5. We shall not, as public officials or employees; accept from anyone other than our public employer any compensation, commission, rebate, or other advantage that may be perceived as related to our public office or employment.

6. We shall not perform work on a project for a client or employer if, in addition to the agreed upon compensation from our client or employer, there is a possibility for direct personal or financial gain to us, our family members, or persons living in our household, unless our client or employer, after full written disclosure from us, consents in writing to the arrangement.

7. We shall not use to our personal advantage, nor that of a subsequent client or employer, information gained in a professional relationship that the client or employer has requested be held inviolate or that we should recognize as confidential because its disclosure could result in embarrassment or other detriment to the client or employer. Nor shall we disclose such confidential information except when (1) required by process of law, or (2) required to prevent a clear violation of law, or (3) required to prevent a substantial injury to the public. Disclosure pursuant to (2) and (3) shall not be made until after we have verified the facts and issues involved and, when practicable, exhausted efforts to obtain reconsideration of the matter and have sought separate opinions on the issue from other qualified professionals employed by our client or employer.

8. We shall not, as public officials or employees, engage in private communications with planning process participants if the discussions relate to a matter over which we have authority to make a binding, final determination if such private communications are prohibited by law or by agency rules, procedures, or custom.

9. We shall not engage in private discussions with decision makers in the planning process in any manner prohibited by law or by agency rules, procedures, or custom.

10. We shall neither deliberately, nor with reckless indifference, misrepresent the qualifications, views and findings of other professionals.

11. We shall not solicit prospective clients or employment through use of false or misleading claims, harassment, or duress.

12. We shall not misstate our education, experience, training, or any other facts which are relevant to our professional qualifications.

13. We shall not sell, or offer to sell, services by stating or implying an ability to influence decisions by improper means.

14. We shall not use the power of any office to seek or obtain a special advantage that is not a matter of public knowledge or is not in the public interest.

15. We shall not accept work beyond our professional competence unless the client or employer understands and agrees that such work will be performed by another professional competent to perform the work and acceptable to the client or employer.

16. We shall not accept work for a fee, or pro bono, that we know cannot be performed with the promptness required by the prospective client, or that is required by the circumstances of the assignment.

17. We shall not use the product of others' efforts to seek professional recognition or acclaim intended for producers of original work.

18. We shall not direct or coerce other professionals to make analyses or reach findings not supported by available evidence.

19. We shall not fail to disclose the interests of our client or employer when participating in the planning process. Nor shall we participate in an effort to conceal the true interests of our client or employer.

20. We shall not unlawfully discriminate against another person.

21. We shall not withhold cooperation or information from the AICP Ethics Officer or the AICP Ethics Committee if a charge of ethical misconduct has been filed against us.

22. We shall not retaliate or threaten retaliation against a person who has filed a charge of ethical misconduct against us or another planner, or who is cooperating in the Ethics Officer's investigation of an ethics charge.

23. We shall not use the threat of filing an ethics charge in order to gain, or attempt to gain, an advantage in dealings with another planner.

24. We shall not file a frivolous charge of ethical misconduct against another planner.

25. We shall neither deliberately, nor with reckless indifference, commit any wrongful act, whether or not specified in the Rules of Conduct, that reflects adversely on our professional fitness.

C: Our Code Procedures

The code procedures adopted by AICP are not included in this appendix. These procedures may be found at http://www.planning.org.

Appendix D: Principles of Smart Growth[1]

Create Range of Housing Opportunities and Choices

Providing quality housing for people of all income levels is an integral component in any smart growth strategy. Housing is a critical part of the way communities grow, as it is constitutes a significant share of new construction and development. More importantly, however, is also a key factor in determining households' access to transportation, commuting patterns, access to services and education, and consumption of energy and other natural resources. By using smart growth approaches to create a wider range of housing choices, communities can mitigate the environmental costs of auto-dependent development, use their infrastructure resources more efficiently, ensure a better jobs-housing balance, and generate a strong foundation of support for neighborhood transit stops, commercial centers, and other services.

No single type of housing can serve the varied needs of today's diverse households. Smart growth represents an opportunity for local communities to increase housing choice not only by modifying their land use patterns on newly-developed land, but also by increasing housing supply in existing neighborhoods and on land served by existing infrastructure. Integrating single- and multi-family structures in new housing developments can support a more diverse population and allow more equitable distribution of households of all income levels across the region. The addition of units -- through attached housing, accessory units, or conversion to multi-family dwellings -- to existing neighborhoods creates opportunities for communities to slowly increase density without radically changing the landscape. New housing construction can be an economic stimulus for existing commercial centers that are currently vibrant during the work day, but suffer from a lack of foot traffic and consumers in evenings or weekends. Most importantly, providing a range of housing choices allow all households to find their niche in a smart growth community – whether it is a garden apartment, a rowhouse, or a traditional suburban home – and accommodate growth at the same time.

Create Walkable Neighborhoods

Walkable communities are desirable places to live, work, learn, worship and play, and therefore a key component of smart growth. Their desirability comes from two factors. First, walkable communities locate within an easy and safe walk goods (such as housing, offices, and retail) and services (such as transportation, schools, libraries) that a community resident or employee needs on a regular basis. Second, by definition, walkable communities make pedestrian activity possible, thus expanding transportation options, and creating a streetscape that better serves a range of users -- pedestrians, bicyclists, transit riders, and automobiles. To foster walkability, communities must mix land uses and build compactly, and ensure safe and inviting pedestrian corridors.

Walkable communities are nothing new. Outside of the last half-century communities worldwide have created neighborhoods, communities, towns and cities premised on pedestrian access. Within the last fifty years public and private actions often present created obstacles to walkable communities. Conventional land use regulation often prohibits the mixing of land uses, thus lengthening trips and making walking a less viable alternative to other forms of travel. This regulatory bias against mixed-use development is reinforced by private financing policies that view mixed-use development as riskier than single-use development. Many communities -- particularly those that are dispersed and largely auto-dependent -- employ street and development design practices that reduce pedestrian activity.

As the personal and societal benefits of pedestrian friendly communities are realized – benefits which include lower transportation costs, greater social interaction, improved personal and environmental health, and expanded consumer choice -- many are calling upon the public and

private sector to facilitate the development of walkable places. Land use and community design plays a pivotal role in encouraging pedestrian environments. By building places with multiple destinations within close proximity, where the streets and sidewalks balance all forms of transportation, communities have the basic framework for encouraging walkability.

Encourage Community and Stakeholder Collaboration

Growth can create great places to live, work and play -- if it responds to a community's own sense of how and where it wants to grow. Communities have different needs and will emphasize some smart growth principles over others: those with robust economic growth may need to improve housing choices; others that have suffered from disinvestment may emphasize infill development; newer communities with separated uses may be looking for the sense of place provided by mixed-use town centers; and still others with poor air quality may seek relief by offering transportation choices. The common thread among all, however, is that the needs of every community and the programs to address them are best defined by the people who live and work there.

Citizen participation can be time-consuming, frustrating and expensive, but encouraging community and stakeholder collaboration can lead to creative, speedy resolution of development issues and greater community understanding of the importance of good planning and investment. Smart Growth plans and policies developed without strong citizen involvement will at best not have staying power; at worst, they will be used to create unhealthy, undesirable communities. When people feel left out of important decisions, they will be less likely to become engaged when tough decisions need to be made. Involving the community early and often in the planning process vastly improves public support for smart growth and often leads to innovative strategies that fit the unique needs of each community.

Foster Distinctive, Attractive Places with a Strong Sense of Place

Smart growth encourages communities to craft a vision and set standards for development and construction which respond to community values of architectural beauty and distinctiveness, as well as expanded choices in housing and transportation. It seeks to create interesting, unique communities which reflect the values and cultures of the people who reside there, and foster the types of physical environments which support a more cohesive community fabric. Smart growth promotes development which uses natural and man-made boundaries and landmarks to create a sense of defined neighborhoods, towns, and regions. It encourages the construction and preservation of buildings which prove to be assets to a community over time, not only because of the services provided within, but because of the unique contribution they make on the outside to the look and feel of a city.

Guided by a vision of how and where to grow, communities are able to identify and utilize opportunities to make new development conform to their standards of distinctiveness and beauty. Contrary to the current mode of development, smart growth ensures that the value of infill and greenfield development is determined as much by their accessibility (by car or other means) as their physical orientation to and relationship with other buildings and open space. By creating high-quality communities with architectural and natural elements that reflect the interests of all residents, there is a greater likelihood that buildings (and therefore entire neighborhoods) will retain their economic vitality and value over time. In so doing, the infrastructure and natural resources used to create these areas will provide residents with a distinctive and beautiful place that they can call "home" for generations to come.

Make Development Decisions Predictable, Fair and Cost Effective

For a community to be successful in implementing smart growth, it must be embraced by the private sector. Only private capital markets can supply the large amounts of money needed to meet the growing demand for smart growth developments. If investors, bankers, developers, builders and others do not earn a profit, few smart growth projects will be built. Fortunately, government can help make smart growth profitable to private investors and developers. Since the development industry is highly regulated, the value of property and the desirability of a place is largely affected by government investment in infrastructure and government regulation. Governments that make the right infrastructure and regulatory decisions will create fair, predictable and cost effective smart growth.

Despite regulatory and financial barriers, developers have been successful in creating examples of smart growth. The process to do so, however, requires them to get variances to the codes – often a time-consuming, and therefore costly, requirement. Expediting the approval process is of particular importance for developers, for whom the common mantra, "time is money" very aptly applies. The longer it takes to get approval for building, the longer the developer's capital remains tied up in the land and not earning income. For smart growth to flourish, state and local governments must make an effort to make development decisions about smart growth more timely, cost-effective, and predictable for developers. By creating a fertile environment for innovative, pedestrian-oriented, mixed-use projects, government can provide leadership for smart growth that the private sector is sure to support.

Mix Land Uses

Smart growth supports the integration of mixed land uses into communities as a critical component of achieving better places to live. By putting uses in close proximity to one another, alternatives to driving, such as walking or biking, once again become viable. Mixed land uses also provides a more diverse and sizable population and commercial base for supporting viable public transit. It can enhance the vitality and perceived security of an area by increasing the number and attitude of people on the street. It helps streets, public spaces and pedestrian-oriented retail again become places where people meet, attracting pedestrians back onto the street and helping to revitalize community life.

Mixed land uses can convey substantial fiscal and economic benefits. Commercial uses in close proximity to residential areas are often reflected in higher property values, and therefore help raise local tax receipts. Businesses recognize the benefits associated with areas able to attract more people, as there is increased economic activity when there are more people in an area to shop. In today's service economy, communities find that by mixing land uses, they make their neighborhoods attractive to workers who increasingly balance quality of life criteria with salary to determine where they will settle. Smart growth provides a means for communities to alter the planning context which currently renders mixed land uses illegal in most of the country.

Preserve Open Space, Farmland, Natural Beauty and Critical Environmental Areas

Smart growth uses the term "open space" broadly to mean natural areas both in and surrounding localities that provide important community space, habitat for plants and animals, recreational opportunities, farm and ranch land (working lands), places of natural beauty and critical environmental areas (e.g. wetlands). Open space preservation supports smart growth goals by bolstering local economies, preserving critical environmental areas, improving our communities quality of life, and guiding new growth into existing communities.

There is growing political will to save the "open spaces" that Americans treasure. Voters in 2000 overwhelmingly approved ballot measures to fund open space protection efforts. The reasons for such support are varied and attributable to the benefits associated with open space protection.

Protection of open space provides many fiscal benefits, including increasing local property value (thereby increasing property tax bases), providing tourism dollars, and decreases local tax increases (due to the savings of reducing the construction of new infrastructure). Management of the quality and supply of open space also ensures that prime farm and ranch lands are available, prevents flood damage, and provides a less expensive and natural alternative for providing clean drinking water.

The availability of open space also provides significant environmental quality and health benefits. Open space protects animal and plant habitat, places of natural beauty, and working lands by removing the development pressure and redirecting new growth to existing communities. Additionally, preservation of open space benefits the environment by combating air pollution, attenuating noise, controlling wind, providing erosion control, and moderating temperatures. Open space also protects surface and ground water resources by filtering trash, debris, and chemical pollutants before they enter a water system.

Provide a Variety of Transportation Choices

Providing people with more choices in housing, shopping, communities, and transportation is a key aim of smart growth. Communities are increasingly seeking these choices -- particularly a wider range of transportation options -- in an effort to improve beleaguered transportation systems. Traffic congestion is worsening across the country. Where in 1982 65 percent of travel occurred in uncongested conditions, by 1997 only 36 percent of peak travel occurred did so. In fact, according to the Texas Transportation Institute, congestion over the last several years has worsened in nearly every major metropolitan area in the United States.

In response, communities are beginning to implement new approaches to transportation planning, such as better coordinating land use and transportation; increasing the availability of high quality transit service; creating redundancy, resiliency and connectivity within their road networks; and ensuring connectivity between pedestrian, bike, transit, and road facilities. In short, they are coupling a multi-modal approach to transportation with supportive development patterns, to create a variety of transportation options.

Strengthen and Direct Development Towards Existing Communities

Smart growth directs development towards existing communities already served by infrastructure, seeking to utilize the resources that existing neighborhoods offer, and conserve open space and irreplaceable natural resources on the urban fringe. Development in existing neighborhoods also represents an approach to growth that can be more cost-effective, and improves the quality of life for its residents. By encouraging development in existing communities, communities benefit from a stronger tax base, closer proximity of a range of jobs and services, increased efficiency of already developed land and infrastructure, reduced development pressure in edge areas thereby preserving more open space, and, in some cases, strengthening rural communities.

The ease of greenfield development remains an obstacle to encouraging more development in existing neighborhoods. Development on the fringe remains attractive to developers for its ease of access and construction, lower land costs, and potential for developers to assemble larger parcels. Typical zoning requirements in fringe areas are often easier to comply with, as there are often few existing building types that new construction must complement, and a relative absence of residents who may object to the inconvenience or disruption caused by new construction.

Nevertheless, developers and communities are recognizing the opportunities presented by infill development, as suggested not only by demographic shifts, but also in response to a growing awareness of the fiscal, environmental, and social costs of development focused disproportionately on the urban fringe. Journals that track real estate trends routinely cite the investment appeal of the "24-hour city" for empty nesters, young professionals, and others, and developers are beginning to respond. A 2001 report by Urban Land Institute on urban infill

housing states that, in 1999, the increase in housing permit activity in cities relative to average annual figures from the preceding decade exceeded that of the suburbs, indicating that infill development is possible and profitable.

Take Advantage of Compact Building Design

Smart growth provides a means for communities to incorporate more compact building design as an alternative to conventional, land consumptive development. Compact building design suggests that communities be designed in a way which permits more open space to preserved, and that buildings can be constructed which make more efficient use of land and resources. By encouraging buildings to grow vertically rather than horizontally, and by incorporating structured rather than surface parking, for example, communities can reduce the footprint of new construction, and preserve more greenspace. Not only is this approach more efficient by requiring less land for construction. It also provides and protects more open, undeveloped land that would exist otherwise to absorb and filter rain water, reduce flooding and stormwater drainage needs, and lower the amount of pollution washing into our streams, rivers and lakes.

Compact building design is necessary to support wider transportation choices, and provides cost savings for localities. Communities seeking to encourage transit use to reduce air pollution and congestion recognize that minimum levels of density are required to make public transit networks viable. Local governments find that on a per-unit basis, it is cheaper to provide and maintain services like water, sewer, electricity, phone service and other utilities in more compact neighborhoods than in dispersed communities.

Research based on these developments has shown, for example, that well-designed, compact New Urbanist communities that include a variety of house sizes and types command a higher market value on a per square foot basis than do those in adjacent conventional suburban developments. Perhaps this is why increasing numbers of the development industry have been able to successfully integrate compact design into community building efforts. This despite current zoning practices – such as those that require minimum lot sizes, or prohibit multi-family or attached housing – and other barriers - community perceptions of "higher density" development, often preclude compact design.

---

[1] Source: Smart Growth Network; www.smartgrowth.org . In 1996, the U.S. Environmental Protection Agency joined with several non-profit and government organizations to form the Smart Growth Network (SGN). The Network was formed in response to increasing community concerns about the need for new ways to grow that boost the economy, protect the environment, and enhance community vitality. The Network's partners include environmental groups, historic preservation organizations, professional organizations, developers, real estate interests; local and state government entities.

Appendix E: Charter for the New Urbanism[1]

The Congress for the New Urbanism views disinvestment in central cities, the spread of placeless sprawl, increasing separation by race and income, environmental deterioration, loss of agricultural lands and wilderness, and the erosion of society's built heritage as one interrelated community-building challenge.

We stand for the restoration of existing urban centers and towns within coherent metropolitan regions, the reconfiguration of sprawling suburbs into communities of real neighborhoods and diverse districts, the conservation of natural environments, and the preservation of our built legacy.

We recognize that physical solutions by themselves will not solve social and economic problems, but neither can economic vitality, community stability, and environmental health be sustained without a coherent and supportive physical framework.

We advocate the restructuring of public policy and development practices to support the following principles: neighborhoods should be diverse in use and population; communities should be designed for the pedestrian and transit as well as the car; cities and towns should be shaped by physically defined and universally accessible public spaces and community institutions; urban places should be framed by architecture and landscape design that celebrate local history, climate, ecology, and building practice.

We represent a broad-based citizenry, composed of public and private sector leaders, community activists, and multidisciplinary professionals. We are committed to reestablishing the relationship between the art of building and the making of community, through citizen-based participatory planning and design.

We dedicate ourselves to reclaiming our homes, blocks, streets, parks, neighborhoods, districts, towns, cities, regions, and environment.

We assert the following principles to guide public policy, development practice, urban planning, and design:

THE REGION: METROPOLIS, CITY, AND TOWN

1. Metropolitan regions are finite places with geographic boundaries derived from topography, watersheds, coastlines, farmlands, regional parks, and river basins. The metropolis is made of multiple centers that are cities, towns, and villages, each with its own identifiable center and edges.

2. The metropolitan region is a fundamental economic unit of the contemporary world. Governmental cooperation, public policy, physical planning, and economic strategies must reflect this new reality.

3. The metropolis has a necessary and fragile relationship to its agrarian hinterland and natural landscapes. The relationship is environmental, economic, and cultural. Farmland and nature are as important to the metropolis as the garden is to the house.

4. Development patterns should not blur or eradicate the edges of the metropolis. Infill development within existing urban areas conserves environmental resources, economic investment, and social fabric, while reclaiming marginal and abandoned areas. Metropolitan regions should develop strategies to encourage such infill development over peripheral expansion.

5. Where appropriate, new development contiguous to urban boundaries should be organized as neighborhoods and districts, and be integrated with the existing urban pattern. Noncontiguous development should be organized as towns and villages with their own urban edges, and planned for a jobs/housing balance, not as bedroom suburbs.

6. The development and redevelopment of towns and cities should respect historical patterns, precedents, and boundaries.

7. Cities and towns should bring into proximity a broad spectrum of public and private uses to support a regional economy that benefits people of all incomes. Affordable housing should be distributed throughout the region to match job opportunities and to avoid concentrations of poverty.

8. The physical organization of the region should be supported by a framework of transportation alternatives. Transit, pedestrian, and bicycle systems should maximize access and mobility throughout the region while reducing dependence upon the automobile.

9. Revenues and resources can be shared more cooperatively among the municipalities and centers within regions to avoid destructive competition for tax base and to promote rational coordination of transportation, recreation, public services, housing, and community institutions.

THE NEIGHBORHOOD, THE DISTRICT, AND THE CORRIDOR

1. The neighborhood, the district, and the corridor are the essential elements of development and redevelopment in the metropolis. They form identifiable areas that encourage citizens to take responsibility for their maintenance and evolution.

2. Neighborhoods should be compact, pedestrian-friendly, and mixed-use. Districts generally emphasize a special single use, and should follow the principles of neighborhood design when possible. Corridors are regional connectors of neighborhoods and districts; they range from boulevards and rail lines to rivers and parkways.

3. Many activities of daily living should occur within walking distance, allowing independence to those who do not drive, especially the elderly and the young. Interconnected networks of streets should be designed to encourage walking, reduce the number and length of automobile trips, and conserve energy.

4. Within neighborhoods, a broad range of housing types and price levels can bring people of diverse ages, races, and incomes into daily interaction, strengthening the personal and civic bonds essential to an authentic community.

5. Transit corridors, when properly planned and coordinated, can help organize metropolitan structure and revitalize urban centers. In contrast, highway corridors should not displace investment from existing centers.

6. Appropriate building densities and land uses should be within walking distance of transit stops, permitting public transit to become a viable alternative to the automobile.

7. Concentrations of civic, institutional, and commercial activity should be embedded in neighborhoods and districts, not isolated in remote, single-use complexes. Schools should be sized and located to enable children to walk or bicycle to them.

8. The economic health and harmonious evolution of neighborhoods, districts, and corridors can be improved through graphic urban design codes that serve as predictable guides for change.

9. A range of parks, from tot-lots and village greens to ballfields and community gardens, should be distributed within neighborhoods. Conservation areas and open lands should be used to define and connect different neighborhoods and districts.

THE BLOCK, THE STREET, AND THE BUILDING

1. A primary task of all urban architecture and landscape design is the physical definition of streets and public spaces as places of shared use.

2. Individual architectural projects should be seamlessly linked to their surroundings. This issue transcends style.

3. The revitalization of urban places depends on safety and security. The design of streets and buildings should reinforce safe environments, but not at the expense of accessibility and openness.

4. In the contemporary metropolis, development must adequately accommodate automobiles. It should do so in ways that respect the pedestrian and the form of public space.

5. Streets and squares should be safe, comfortable, and interesting to the pedestrian. Properly configured, they encourage walking and enable neighbors to know each other and protect their communities.

6. Architecture and landscape design should grow from local climate, topography, history, and building practice.

7. Civic buildings and public gathering places require important sites to reinforce community identity and the culture of democracy. They deserve distinctive form, because their role is different from that of other buildings and places that constitute the fabric of the city.

8. All buildings should provide their inhabitants with a clear sense of location, weather and time. Natural methods of heating and cooling can be more resource-efficient than mechanical systems.

9. Preservation and renewal of historic buildings, districts, and landscapes affirm the continuity and evolution of urban society.

---

[1] Source: Congress for the New Urbanism; www.cnu.org. For additional information see: Congress for the New Urbanism. **Charter of the New Urbanism: Region / Neighborhood, District, and Corridor / Block, Street, and Building**. New York: McGraw-Hill Books, 1999.

Appendix F: Information Sources

The organizations listed below provide a broad array of information about planning and the role of the *planning official.*

American Planning Association – www.planning.org

Florida Chapter of the American Planning Association – www.floridaplanning.org

Florida Planning and Zoning Association – www.fpza.org

University of Florida, Department of Urban & Regional Planning – www.dcp.ufl.edu/urp

Florida Atlantic University, Department of Urban & Regional Planning – www.fau.edu/divdept/caupa/durp

Florida State University, Department of Urban & Regional Planning – www.fsu.edu/~durp

MyFlorida.com – The Official Portal of the State of Florida – www.myflorida.com

Florida Department of Community Affairs – www.dca.state.fl.us

Florida Department of Transportation – www.dot.state.fl.us

Florida Department of Environmental Protection – www.dep.state.fl.us

Florida Institute of Government – www.fsu.edu/~iog

Regional Planning Councils – www.myflorida.com (click on Government / Regional Councils & Districts)

Water Management Districts – www.myflorida.com (click on Government / Regional Councils & Districts)

County Governments - www.myflorida.com (click on Government / Local Government)

City Governments - www.myflorida.com (click on Government / Local Government)

Planning Commissioner's Journal – www.plannersweb.com

The Smart Growth Network – www.smartgrowth.org

The Urban Land Institute – www.uli.org

The Congress For The New Urbanism – www.cnu.org

Florida Homebuilders Association - www.fhba.org

Appendix G: The Planning Officials Essential Library

The following references are offered as an essential library for *planning officials.* Ask your planning director if these publications are available. If not, take steps to procure them for your city or county.



Successful Public Meetings

2nd ed. Elaine Cogan. 2000. 134 *pp.*
(APA Planners Press.) www.planning.org/publications

Use this comprehensive guide to plan and conduct productive meetings that leave nothing to chance. Cogan identifies the components of a successful meeting, lists crucial tasks, explains how to avoid or over- come disasters, and reveals tactful; but effective, ways to manage difficult participants. True stories of public meetings enliven the narrative, and step-by-step checklists cover every aspect of meetings. This updated edition encompasses e-mail and the Internet.



Citizen's Guide to Planning

3rd ed. Herbert H. Smith. 1993.267 *pp.*
(APA Planners Press.) www.planning.org/publications

This perennial best seller will help both laymen and aspiring professionals understand the basics of planning. Smith explains the different roles of planning commissioners and professionals. He examines topics such as the master plan, capital improvements programs, zoning, and subdivision regulation. A highly personal, insider's account of the planning process.



Citizen's Guide to Zoning

*Herbert H. Smith. .*I 983. 242 *pp. (APA Planners Press.) www.planning.org/publications*

An easy-to-read book about zoning that cuts the jargon out but leaves the wisdom in. Smith explains the fundamental principles of zoning, how to develop zoning regulations, and the nuts and bolts of a zoning ordinance. He examines variances, zoning hearings, and frequent zoning problems



Job of the Planning Commissioner

3rd ed.; revised. Albert So/nit. 1987. 198 *pp.*
(APA Planners Press.) www.planning.org/publications

A popular and practical guide on how to be an effective planning commissioner. Filled with checklists and outlines, it's both a good introduction and a handy reference. Includes criteria for keeping a master plan in working order, lists of tools to guide growth, advice on how to deal with professional staff, and do's and don'ts of successful public meetings.



Planning Made Easy

William Toner et al.1994.168 pp.
(APA Planners Press.) www.planning.org/publications
Training Made Easy *(15-minute video and training guide).*

Developing a program to train planning commissioners and zoning board members takes a lot of time and effort. This manual can help. It covers the basics of planning, zoning, subdivision regulation, and ethics. Organized in discrete modules, it's ideal for both self- study and classroom use. Exercises focus on local planning issues and worksheets reinforce important concepts.



Planning Commissioners Guide

David Allor. 1984. 186 *pp.*
(APA Planners Press.) www.planning.org/publications

Allor shows commissioners how to make group decisions in a reasonable and effective way. He first interviewed commission members. Then he listened to staff presentations, questions and comments of commissioners, and testimony of applicants and witnesses. He uses this information to show how commissioners can work together to direct a community's development.



Design With Nature

Ian L. McHarg. 1991; *original* 1969. 198 *pp. (John Wiley & Sons.) www.planning.org/publications*

An elegant reissue of an important planning milestone. This book first brought the concept of environmental sensitivity to the planning profession. and it has served as the basis for much of our most important work. This reprint makes this visionary work available for a new generation of planners



Best Development Practices

Reid Ewing. 1996. *180 pp. (Copublished by APA*
Planners Press and the Urban Land Institute.) www.planning.org/publications

This richly illustrated book argues that developers can create vibrant, livable communities- and still make money. Ewing searched Florida for the best contemporary developments. He studied these exceptional places to find out what lessons they held and distilled them into 43 "best practices" for four areas of development-land use, transportation, the environment, and housing. Case studies show how these practices make good business sense for developers, reduce automobile dependence, increase the supply of affordable housing, and serve other important public purposes.



Customer Service in Local Government

Bruce w: McClendon. 1992. 226 *pp. (APA Planners Press.) www.planning.org/publications*

McClendon shows how local governments benefit when they make customers a priority and incorporate their needs in all government functions. He explains how to use interviews, surveys, and focus groups to assess what services address local problems and craft citizen participation programs that build ongoing communication. Case studies demonstrate how such programs improve customer satisfaction.



Above and Beyond

Julie Campoli, Elizabeth Humstone, and Alex
Maclean. 2002. 203 pp. (APA Planners Press.) www.planning.org/publications

Above and Beyond compares contemporary and traditional development patterns and demonstrates how suburban sprawl is forever changing the look of rural America. Aerial photographs- many altered through computer simulation to illustrate how landscapes are transformed over time-show how traditional development patterns produce more compact cities and towns. The authors introduce communities that have successfully fought sprawl and invigorated their town areas; nurtured community identity; rewritten land-use regulations to allow for more compact development; and overcome the "cars rule" mentality of sprawl development. These examples will inspire planners, planning officials, and concerned citizens in rural communities and small towns everywhere.



Rural by Design

Randall Arendt. 1994. 441 *pp. (APA Planners Press.) www.planning.org/publications*

Conventional planning techniques just aren't working in many rural and suburbanizing areas. Arendt advocates creative land-use planning techniques for preserving open space and community character in a variety of residential, commercial, and mixed-use developments. Thirty-eight cases from 21 states demonstrate how rural and suburban communities have preserved open space, established land trusts, and designed affordable housing appropriate for their size and character.



Welcome to the Commission: A Guide for New Members

The Planning Commissioners Journal. 40 pp www.plannersweb.com

The Guide for New Members is 40 pages long and incorporates carefully selected excerpts from past PCJ articles and columns. Illustrations by cartoonist Mark Hughes help highlight points made in the text. At the end of the Guide you'll also find an annotated reading list of books of particular interest to new commissioners. The Guide is also 3-hole punched for easy storage.



Planners on Planning : Leading Planners Offer Real-Life Lessons on What Works, What Doesn't, and Why

Bruce W. McClendon, Anthony James Catanese, 320 pp, *(Jossey-Bass) www.amazon.com*

Offers pragmatic information on the realities of day-to-day practice from some of the most innovative, respected, and visionary leaders in the planning profession today. Bridging the gap between theory and practice, this guide provides straightforward lessons from today's most effective planners on the core values, skills, and techniques needed for success. Through personal, real-life examples from the trenches, these experts explain in their own words what works, what doesn't, and why.

City Planner Chris Heid Terminated

By **Nestor Suarez**
May 19, 2023
https://new.miamisprings.com/city-planner-chris-heid-terminated/

In a surprise move, we learned today from city officials that Chris Heid, the City Planner for the City of Miami Springs, was terminated from employment this week.

As you may know, the current City Manager, William Alonso, is resigning at the end of the month. So it was somewhat surprising to see that the City Manager would fire the longtime City Planner so abruptly just days before the City Manager officially departs from his role at City Hall.

Chris Heid drew public scrutiny over his approval of the development at One Curtiss Parkway. As we have reported repeatedly, the downtown development has insufficient parking to support the resident and commercial parking. Furthermore, the development was given credit for public street parking, but the plans were approved without ever assessing a fee for the public parking.

Almost exactly one year ago, Miami Springs resident Jim Lewellyn was vociferous in the lack of accountability and called for the resignation of the City Manager and the City Planner.

In an infamous April 2022 meeting, Councilman Fajet asked the City Planner, Chris Heid, *"Chris, what was the fee we charged the Theater Property Developer?"*

The City Planner responded, *"Well, we didn't. And one of the reasons that we didn't, unfortunately, is because we never had established a fee. We talked about a parking impact fee. But since there was no fee established, it was not applicable to them. And William is right. That one is done. The permits are issued. We can't go back to them now and say, 'Well, you owe us a million dollars.' In hindsight we wish we would have established a fee and charged them something. But we didn't. This is to close the barn doors."*

While no reason has been publicly released, we applaud the City Manager's decision. This will allow the new incoming City Manager an opportunity to move the city forward in a new direction.

Of course, that means the City of Miami Springs will have to hire a new City Planner. The City of Miami Springs recently hired a new Finance Manager, a role previously filled by William Alonso. The City also hired an executive search firm to recruit quality candidates to fill the role of City Manager. The City Council will then hopefully select a City Manager from the pool of candidates that were vetted by the search firm.

Either way, there are lots of changes happening at Miami Springs City Hall. Ultimately, we hope these changes are for the betterment of our community.

Resident Calls for Resignation of City Manager & Planner

Letter to the Editor by Jim Llewellyn
May 26, 2022
https://new.miamisprings.com/resident-calls-for-resignation-of-city-manager-planner/

To All Miami Springs Residents:

Miami Springs City Manager William Alonso and City Planner Chris Heid need to promptly resign. If not, the council needs to protect the taxpayers by terminating them. Let's review. A few years ago Alonso and Heid, along with departed former city attorney Dan Espino concocted the great debacle known as the Gateway District. The previous council including Councilman Best and then Councilwoman Mitchell supported its creation. Residents roared their disapproval when they found out but it was too late. **In their submissiveness to the owner of the Circle Theater property and eager developers licking their chops at such a compliant administration, they betrayed the residents of MS by allowing increased density (more apartments) and inadequate parking.** To her credit, then Councilwoman Mitchell voted against allowing smaller apartments and decreased parking requirements but it was too late. The rest of the council had submitted to their overlords.

But the violations of trust didn't stop there. Alonso, Heid, and Espino allowed people to be deceived when they failed to correct the erroneous belief that the development would provide shared parking for the public. Adding insult to injury they also permitted the developers to factor in public parking in their parking requirement calculations, further worsening our existing parking shortage crisis. **Now we find out that they also pulled a huge financial scam on the residents and local businesses by neglecting/refusing to charge the appropriate parking fees to the developers. Fees that could amount to well over a million dollars!** MS.com has posted comprehensive reports on all these issues that should be read by all.

Espino has already moved on as a partner with a major law firm that describes itself in part as "serving as the go-to law firm for real estate developers, property owners, and business owners." Evidently, a resume that includes hatching a sleazy deal with developers at the expense of fellow residents has its rewards. **But the Dubious Duo of Alonso and Heid remain. At the April 25th council meeting they were exposed for their egregious failure to impose appropriate fees for the public parking they had sacrificed to developers. Some of the council members were aghast and wanted answers about the failure to extract the million-dollar-plus fees. This was their shocking response as quoted in MS.com. Alonso stated;** "That's done. That's done. It's not like we set this fee now, they're going to have to pay that fee. This is for future developments." **Heid stated**; "Well, we didn't. We talked about a parking impact fee. But since there was no fee established, it was not applicable to them. And William is right. That one is done. The permits are issued. We can't go back to them now and say, 'Well, you owe us a million dollars.' In hindsight, we wish we would have established a fee and charged them something. But we didn't."

They were shameless in their subservience to the developers! Even as their gross negligence and suspicious dereliction of duty were being exposed they remained slavishly devoted to protecting the developer's financial interest and depriving our community of a rightful million bucks or more!

According to a government salaries website, as of 2020 Alonso and Heid have combined yearly salaries of around a quarter-million dollars or more with added benefits. **They are long-time employees which means that we taxpayers have paid them millions in wages and benefits over the years. Instead of abiding by an honorable sense of strict fiduciary responsibility and loyalty to the residents, they stabbed us in the back. And then twisted the knife. Incompetence? Negligence? Outright corruption? Whatever the causes we are dealing with the appalling and destructive fallout. They have violated our trust way too many times and must go. It's time for this council to clean house.** Mayor Mitchell and especially Councilman Best may still back the officials that inflicted this catastrophe on us because they were part of the process and failed to provide proper oversight. The rest of this council was not involved and they need to impose accountability now. **We need new trustworthy and professional administrators who will truly represent and protect the interests of us residents instead of developers and politically connected property owners.**

Jim Llewellyn

Exhibit B BOA Meeting
Rec'd 2/26/2025 EG

J.H. MANUCY, INC.

PROFESSIONAL LAND SURVEYORS

4694 Palm Avenue Suite 203 • Hialeah Florida 33012
DADE: (305) 821-1281 • (305) 821-1220 BROWARD (305) 563-2066

I HEREBY CERTIFY THAT THIS PLAT OF SURVEY WAS PREPARED UNDER MY DIRECTION; THAT IT MEETS THE MINIMUM TECHNICAL STANDARDS FOR LAND SURVEYING IN THE STATE OF FLORIDA (CHAPTER 21HH-5 FLORIDA ADMINISTRATIVE CODE) FOR THE TYPE OF SURVEY SHOWN HEREON AND IS TRUE AND CORRECT TO THE BEST OF MY KNOWLEDGE AND BELIEF.

J.H. Manucy, Professional Land Surveyor #1128
John F. Pulice, Professional Land Surveyor #2691

State of Florida Date September 1, 1983

BOUNDARY SURVEY

WAIVER OF PLAT APPROVED
8/13/84
LEGAL DESCRIPTION
a.k.a. 200 ESPLANADE
M.S.C.O. SEC. 150, 151, 152
K.M. Wells
BUILDING OFFICIAL, CITY OF MIAMI SPRINGS

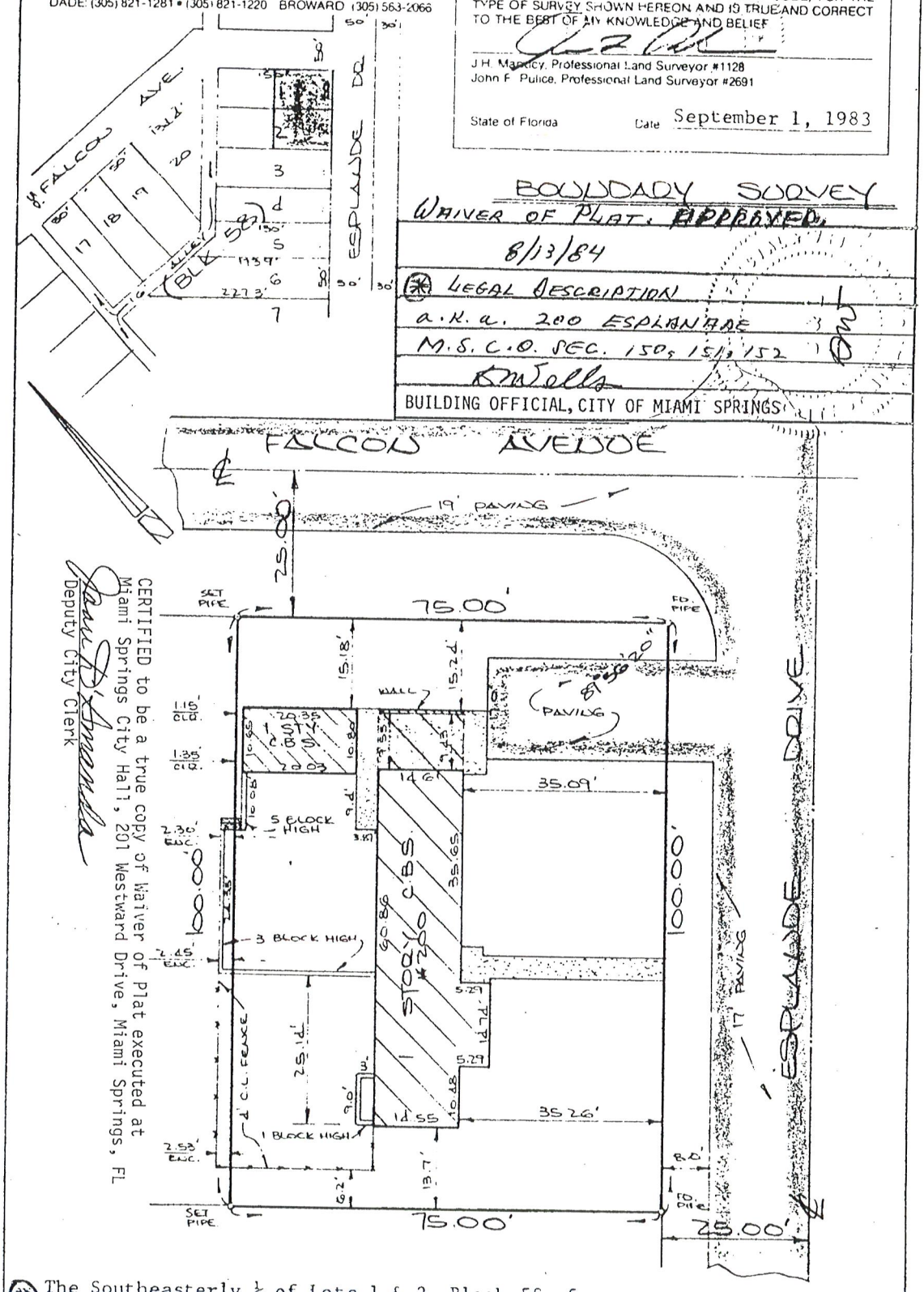

CERTIFIED to be a true copy of Waiver of Plat executed at Miami Springs City Hall, 201 Westward Drive, Miami Springs, FL
Deputy City Clerk

The Southeasterly ½ of Lots 1 & 2, Block 58 of CINEMA PARK ADDITION TO COUNTRY CLUB ESTATES
as recorded in Plat Book 17 at Page 2 according to the Plat thereof of the Public Records of Dade County, Florida.

FOR: Thomas W. Jackson DATE: August 31, 1983

SCALE 1" = 20' ORDER No. 27237 F.B. A152-49 REV.

REV.

Exhibit C – BOA Meeting Rec’d 02/26/2025

- USB: Full Duplicate Copy of Appellant Binder with Index, Tabs 1 through 19

Exhibit D – BOA Meeting Rec’d 02/26/2025

- USB: Three Letters to the City and aerial of properties

Antonio J. Rubio
210 Esplanade Dr.
Miami Springs, FL 33166
rubioaj10@gmail.com
02/17/25

Board of Adjustment
City of Miami Springs
201 Westward Drive, Miami Springs, FL 33166

Subject: Concern Regarding Setback Violation at 200 Esplanade Dr.

Dear Members of the Board of Adjustment,

I am writing to express my concerns regarding a recent construction at 200 Esplanade Dr. that appears to violate the city's setback regulations. I understand that maintaining proper setbacks is essential to preserving the character and integrity of our residential neighborhoods, and I am troubled by the apparent encroachment into the required setback areas.

One of the aspects I value most about living in Miami Springs is the thoughtful urban planning that emphasizes open spaces, privacy, and the natural beauty of our community. The setback requirements play a vital role in maintaining these qualities by ensuring that homes are not built too closely together, allowing for green space, mature trees, and a sense of openness between properties. This not only protects individual property values but also upholds the shared aesthetic and quality of life we all appreciate.

The construction in question is concerning because it significantly reduces the distance between homes, encroaching on the privacy and comfort of neighboring residents. I am particularly aware that my neighbor is deeply upset by this development, as it affects her peace of mind and the enjoyment of her property. Allowing such encroachments could set a troubling precedent, potentially leading to more violations and a gradual erosion of the community character that makes Miami Springs a desirable place to live.

I respectfully urge the Board of Adjustment to carefully consider the implications of permitting construction within the setback areas. I believe it is crucial to enforce these regulations consistently to maintain the integrity of our zoning laws and to protect the unique residential environment we all value.

Thank you for your attention to this matter. I appreciate your service to our community and your commitment to upholding the standards that preserve the quality and character of Miami Springs. Please feel free to contact me if you would like any additional information or clarification regarding my concerns.

Sincerely,

Antonio J. Rubio

DocuSigned by:
Antonio Rubio
10D2B7DDD32C4A0...
2/17/2025

Melissa Bennetti
315 Falcon Avenue
Miami Springs, FL 33166
P: 305-527-5266
E: Melissabennetti@yahoo.com

February 19th, 2025

Subject: Concern Regarding Construction in Setback Areas – 200 N Esplanade Drive

Dear Board of Adjustment & City Council –

I am writing to express my concern regarding the recent approval of construction that appears to encroach on the required setback areas in my neighborhood. My neighbor Michelle Fereira has raised valid concerns about a home being built in extreme proximity to her property, and I share her distress regarding the potential impact on the character of our community.

One of the aspects I value most about Miami Springs is its unique residential charm marked by open spaces, greenery, and a sense of privacy between homes. These qualities help maintain the character and appeal of our city, setting it apart from more congested areas. Allowing homes to be built without proper setbacks erodes this character, leading to overcrowding, reduced green space, and diminished quality of life for residents.

I am surprised that this construction was permitted despite the setback regulations that are intended to preserve the integrity of our neighborhoods. I urge the city to review this situation and seek a resolution that upholds the zoning standards meant to protect homeowners from developments that compromise their property and privacy.

I appreciate your attention to this matter and look forward to hearing how the city plans to address these concerns. Please feel free to contact me if further discussion is needed.

Kind regards,

Melissa Bennetti

February 19, 2025

To: City of Miami Springs
Board of Adjustment and City Council

From: Carlos Velasquez and Zoila Rivera
290 N Esplanade Drive

Dear Board of Adjustment Members and the Members of City Council,

We are writing to formally express our objection to the construction taking place at the house located at 200 N. Esplanade Drive. Our home at 290 N Esplanade Drive is located on the opposite end of the block near the tennis courts. All of the houses on our block face the canal with our backyards abutting the alley. There is space and distance between us and the neighbor to our left and there is space and distance between us and the neighbor behind us. This space respects our right to privacy, provides light and promotes ample air circulation. This separation also ensures that there is adequate green space. The substantial addition to the house at 200 N. Esplanade is completely incompatible with the houses on our block and is oversized for that lot. It's an EYESORE! Our zoning code provides binding standards for the construction and alteration of single family homes in our community and imposes clear requirements to maintain distance and separation between structures and limitations restricting how much of your lot can be covered by permanent structures. These are important factors that not only all property owners in our community must comply with, but which the City is also required to abide by and apply fairly and consistently. The house at 200 N. Esplanade blatantly disregards all of these standards, and creates serious issues. Not only is the value of our property directly and negatively affected by what is happening at 200 N. Esplanade, we also have serious concerns that if the unlawful construction at 200 N. Esplanade is not stopped and permanently prohibited from continuing, the City will be sending a message that no one needs to respect our codes and anyone can build homes even if they are inconsistent with the character of our community, and effectively would be endorsing and inviting everyone who so desires to develop their homes however they wish. That is a dangerous precedent. This isn't a community with zero lot lines where houses are built on top of each other. Quite the opposite, we are a community where every person has a right to privacy within his or her home and this creates an obligation on each and every one of us to respect those rights and adhere to our zoning code. For these reasons, we are imploring the members of the Board of Adjustment and the City Council to require the owner of 200 N. Esplanade to comply with our zoning code by providing the required setbacks, including the removal of any illegal non-conforming structures.

Thank you for your time and consideration.

Respectfully,

Carlos Velasquez and Zoila Rivera



Exhibit E
Rec'd 2/26/2025
BOA meeting EG

200 FALCON
150' x 100' RIC
SFD DISTRICT.

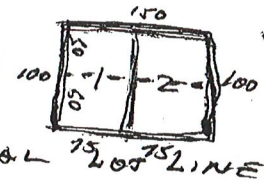

(2) SURVEYS (ORIGINAL LOT LINES)

LOT I (MODIFIED 75 x 100)

CONTAINS AN EXISTING IMPROVEMENT. (Use BUILT _____)

DIAGRAM (a) CUT-OFF MAIN HOUSE TO ACHIEVE REGULATED SETBACKS.

DIAGRAM (b) CUT-OFF MAIN HOUSE TO ACHIEVE REGULATED SETBACKS.

$\boxed{\text{ANY}}$ DEVIATION FROM PLAN (a) OR (b) IS A VARIANCE SUBJECT TO Brd. & COUNCIL APPROVAL.

* REVERSE FRONTAGE (CORNER HOUSE) CAN BE GRANTED TO ASSIST OWNER IN EITHER CASE SELECTED.

LOT II (MODIFIED 75 x 100)

FREE OF IMPROVEMENTS. VACANT LAND UNDER UNITY OF TITLE WITH LOT I.

UG.

* ALL UTILITIES FOR BOTH LOTS MUST BE APPROVED BY P.W., FP&L., SOU BELL, CITY GAS, DYNAMIC CABLE BEFORE REQUESTING WAIVER OF PLAT.

(1) WTR LINE SHOWN IN BLUE

(2) SWR LINE SHOWN IN RED

(3) EASEMENT DESCRIBED ALONG S. SIDE OF LOT II IS SHOWN IN DOTTED LINES 5' IN WIDTH: UTILITIES CAN OCCUPY SAME EXCAVATION DEPENDING ON THEIR RULES FOR INVERT MEASUREMENTS.

Exhibit F Rec'd 2/26/2025 BOA Meeting. EG.

CFN: 20230292824 BOOK 33689 PAGE 924
DATE:05/03/2023 10:04:41 AM
DEED DOC 0.60
LUIS G. MONTALDO, CLERK AD INTERIM
MIAMI-DADE COUNTY, FL

Prepared By:

Michelle N. Gonzalez, Esq.
Akerman LLP
98 Southeast Seventh Street, Suite 1100
Miami, Florida 33131

Folio No. 05-3118-016-1591

QUITCLAIM DEED

THIS QUITCLAIM DEED (this "**Deed**"), is made, entered into, and effective as of the 20th day of ~~February~~ April, 2023, by **MICHELLE N. FERREIRA** ("**Grantor**"), to **MICHELLE N. FERREIRA, as Trustee of the MICHELLE N. FERREIRA REVOCABLE TRUST dated January 3, 2023** ("**Grantee**"), whose address for notice purposes is 300 Falcon Avenue, Miami Springs, Florida 33166.

W I T N E S S E T H:

That the said grantor, for and in consideration of the sum of $10.00, in hand paid by the said grantee, the receipt and sufficiency whereof is hereby acknowledged, does hereby grant, release, convey, and quitclaim forever unto Grantee, and Grantee's successors and assigns, all right, title, interest, claim and demand that Grantor has, if any, in and to the following described lot, piece or parcel of land, situate, lying and being in the County of Miami-Dade, State of Florida, to-wit:

The Northwesterly Half (1/2) of Lots 1 and 2, Block 58, of CINEMA PARK ADDITION TO COUNTRY CLUB ESTATES, according to the Plat thereof, as recorded in Plat Book 17, Page 2, of the Public Records of Miami-Dade County, Florida.

Subject to covenants, restrictions, easements of record and taxes for the current year.

TO HAVE AND TO HOLD the same together with all and singular the appurtenances thereunto belonging or in anywise appertaining, and all the estate, right, title, interest, lien, equity and claim whatsoever of the said Grantor, either in law or equity, to the only proper use, benefit and behoof of the said Grantee forever.

Note to Clerk: This instrument evidences a transfer with no change in beneficial ownership, and is therefore not subject to documentary stamp taxes pursuant to §12B-4.013(28), Florida Administrative Code.

IN WITNESS WHEREOF, the said Grantor has signed these presents the day and year first above written.

Signed, sealed and delivered
in the presence of:

Print Name: ALVARO Escobedo

Print Name: Richard Krinzman

MICHELLE N. FERREIRA

STATE OF FLORIDA)
)ss:
COUNTY OF MIAMI-DADE)

The foregoing instrument was acknowledged before me by means of physical ~~presence~~ or online notarization this 26 day of ~~March~~ April, 2023, by MICHELLE N. FERREIRA, who is personally known to me.

[NOTARIAL SEAL]

RICHARD N. KRINZMAN
Notary Public - State of Florida
Commission # HH 242962
My Comm. Expires Mar 21, 2026
Bonded through National Notary Assn.

Notary Public
Print Name: Richard Krinzman
My Commission Expires:

Exhibit G Rec'd 2/26/2025 BOA Meeting Eg.

CFN: 20210607242 BOOK 32687 PAGE 704
DATE:08/18/2021 10:31:46 AM
DEED DOC 2,460.00
HARVEY RUVIN, CLERK OF COURT, MIA-DADE CTY

Prepared by:
Gladys Aguero, Esq.,
Attorney at Law
GLADYS AGUERO, P.A.
5080 SW 117 Way
Cooper City, Florida 33330
Office: 954-240-4609
Fax: 954-680-2997

Parcel I.D. No.: **05-3118-016-1590**

[Space above this line for recording purposes]

WARRANTY DEED

THIS WARRANTY DEED made this 2 day of August 2021, between **AILLETTE A. RODRIGUEZ-DIAZ,** a married woman whose post office address is 2655 Collins Avenue, Apt 508, Miami Beach, Florida 33140 of the County of Miami Dade, State of Florida hereinafter referred to as *("Grantor")* and **JOVANY JIMENEZ and AMBAR SARA PREVAL, husband and wife** whose post office address is 200 N. Esplanade Drive, Miami Springs, Florida 33166 of the County of Miami Dade, State of Florida hereinafter referred to as *("Grantees")*:

WITNESSETH, that said GRANTOR, for and in consideration of the sum of Ten and No/100 Dollars ($10.00), and other good and valuable considerations to said GRANTOR in hand paid by said GRANTEE, the receipt whereof is hereby acknowledged, has bargained and sold to the said GRANTEE, and GRANTEE'S heirs and assigns forever, the following described land, situate, lying and being in Miami Dade, Florida, to-wit:

Southeasterly ½ of Lots 1 and 2, Block 58, **CINEMA PARK ADDITION TO THE COUNTRY CLUB ESTATES**, according to the Plat thereof as recorded in Plat Book 17, Page 2, of the Public Records of Miami-Dade County, Florida.

Property Address: **200 N. Esplanade Drive, Miami Springs, Florida 33166**

Subject to conditions, restrictions, easements and other limitations appearing on the above Plat, or otherwise common to the above Subdivision, provided, however, that this deed shall not reimpose the same; zoning restrictions and limitations; taxes and assessments for the year 2021 and all subsequent years;

Together with all the tenements, hereditaments and appurtenances thereto belonging or in anywise appertaining.

To Have and To Hold the same in fee simple forever.

And the grantor hereby covenant with said grantees that the grantor is lawfully seized of said land in fee simple; that the grantor has good right and lawful authority to sell and convey said land; that

grantor hereby fully warrant the title to said land, and will defend the same against the lawful claims of all persons whomsoever.

"Grantor" and "Grantee" are used for singular or plural; include all the parties to this instrument and the heirs, legal representatives, and assigns of individuals, and the successors and assigns of corporations, trusts and trustees

Grantor warrants that at the time of this conveyance, the subject property is not the Grantor's homestead within the meaning set forth in the Constitution of the State of Florida, nor is it contiguous to or a part of homestead property. Grantor's residence and homestead address is: 2655 Collins Avenue, Apt 508, Miami Beach, Florida 33140.

IN WITNESS WHEREOF, Grantor has hereunto set grantor's hand and seal the day and year first above written.

Signed, sealed and delivered in our presence, as to all of the grantor:

Moira Jackson

MOIRA JACKSON

Please print the name of the witness above this line

AILLETTE A. RODRIGUEZ-DIAZ

Susana Neville

SUSANA NEVILLE

Please print the name of the witness above this line

STATE OF FLORIDA)

COUNTY OF MIAMI DADE)

The foregoing instrument was subscribed, sworn to and acknowledged before me this 2 day of August, 2021, by **AILLETTE A. RODRIGUEZ-DIAZ** who produced a Florida Driver's License as identification and did take an oath

My commission Expires

GLADYS AGUERO
Commission # GG 954448
Expires June 2, 2024
Bonded Thru Budget Notary Services

Notary Public, State of Florida

Exhibit H Rec'd 2/26/25 Bott Meeting Eeg.

KeyCite Yellow Flag - Negative Treatment
Distinguished by Charlotte County v. Vetter, Fla.App. 2 Dist., January 21, 2004

359 So.2d 509
District Court of Appeal of Florida,Fourth District.

BROWARD COUNTY, Florida, a political subdivision of the State of Florida, L. A. Hester, Broward County Administrator, Gerald F. Thompson, Hugh Anderson, R. B. Barkelew, Ken Jenne, Anne Kolb, Jack L. Moss and J. W. Stevens, as members of the Broward County Commission and constituting the Broward County Commission, James V. Denkenberger, Jr., County Surveyor of Broward County, and John M. Gerren, Jr., Director of Transportation and Planning of Broward County, Florida, Appellants, Case No. 76-1920,

v.

NARCO REALTY, INC., a Pennsylvania Corporation licensed to do business in the State of Florida, Appellee, Case No. 76-1920, Appellant, Case No. 77-868.

Nos. 76-1920, 77-868.
|
May 23, 1978.
|
Rehearing Denied June 28, 1978.

Synopsis

Landowner and county and certain officials thereof brought consolidated appeals from decisions of Circuit Court, Broward County, Frank A. Orlando, J., concerning county approval of subdivision plat of land. The District Court of Appeal, Downey, C. J., held that county had no discretion to refuse plat approval where landowner met all legal requirements for platting land; trial court correctly issued peremptory writ of mandamus so ordering.

Appeals dismissed.

Cross, J., concurred specially with opinion.

Procedural Posture(s): On Appeal.

West Headnotes (3)

[1] **Zoning and Planning** Grounds for Grant or Denial; Conformity to Regulations

All persons similarly situated should be able to obtain plat approval upon meeting uniform standards, otherwise, official approval of a plat application would depend upon whim or caprice of public body involved.

11 Cases that cite this headnote

[2] **Zoning and Planning** Grounds for Grant or Denial; Conformity to Regulations

County had no discretion to refuse plat approval where landowner met all legal requirements for platting land. Sp.Acts 1953, c. 28946 § 14 as amended.

13 Cases that cite this headnote

[3] **Zoning and Planning** Other particular considerations

Granting approval of plat to landowner who met all legal requirements for platting land was ministerial act which was not within discretion of county commission and landowner was entitled to peremptory writ of mandamus ordering the approval; *State ex rel. Zuckerman-Vernon Corp. v. City of Miramar*, 306 So.2d 173, receded from.

14 Cases that cite this headnote

Attorneys and Law Firms

***509** Harry A. Stewart and Betty Lynn Lee, Gen. Counsel for Broward County, Fort Lauderdale, for appellants in case No. 76-1920, for appellees in case No. 77-868.

Robert E. Ferris, Jr., of Gustafson, Caldwell, Stephens & Ferris, Fort Lauderdale, for appellees in case No. 76-1920 and for appellants in case No. 77-868.

WESTLAW © 2025 Thomson Reuters. No claim to original U.S. Government Works.

Opinion

DOWNEY, Chief Judge.

Broward County and certain officials thereof filed a plenary appeal in Case No. 76-1920 to review a Peremptory Writ of Mandamus commanding appellants to approve a subdivision plat of land located in the City of Parkland, Broward County, Florida.

Narco Realty, Inc., has filed an interlocutory appeal in Case No. 77-868 to review an order which denied appellant's (Narco Realty) motion for contempt and partially granted Narco's motion to compel.

Narco Realty, Inc., owns a tract of land in the City of Parkland which it proposes to subdivide. In furtherance of this plan Narco submitted its subdivision plat to the County Commission of Broward County for approval which was refused. Thereupon, Narco filed a Petition for Writ of Mandamus against the County and various county officials seeking to require them to approve the proposed plat so that it could be recorded. The plenary appeal by the County, et ***510** al., is from the granting of the Peremptory Writ.

While the plenary appeal was pending, this court entered an Order requiring the County to post a supersedeas bond if it wished its appeal to supersede the Peremptory Writ. However, the County chose not to post the supersedeas bond, whereupon Narco asked the trial court to hold the County and its officials in contempt for refusing to follow the commands of the Peremptory Writ. Narco also requested the court to compel the County to approve the plat for record. The trial court denied the motion for contempt and ordered the County to approve the plat with certain conditions. The interlocutory appeal from that Order has been consolidated with the plenary appeal.

With regard to the full appeal from the issuance of the Peremptory Writ, the main thrust of appellant's attack is that the approval of a plat by the County Commission is a discretionary act and cannot be made the subject of a Writ of Mandamus. The appellant relies heavily upon our decision in State ex rel. Zuckerman-Vernon Corp. v. City of Miramar, 306 So.2d 173 (Fla. 4th DCA 1974), to support that principle.

Appellee contends, on the other hand, that its Petition for Writ of Mandamus and the stipulation of counsel at the hearing which gave rise to issuance of the Peremptory Writ demonstrate that there was no discretion remaining in the Commission in this case. The petition and stipulation show that all of the legal requirements for approval of a plat for recordation have been met. Those legal requirements are contained in Chapter 177, Florida Statutes (1975) and the Broward County Plat Act. [1]

It appears to be the County's contention that, even though Narco has complied with all of the legal requirements for platting land contained in the general law and Special Act, the County Commission still has the discretion to approve or to refuse approval of any plat, because both Chapter 177 and the Special Act provide for approval by the County Commission. We reject the County's construction that those provisions of the statutes give the County unbridled discretion to deny approval.

[1] All persons similarly situated should be able to obtain plat approval upon meeting uniform standards. Otherwise, the official approval of a plat application would depend upon the whim or caprice of the public body involved. Yokley, in his work, Law of Subdivisions, s 52, states:

> "Thus, while public policy requires municipal control of such development, nevertheless, the authority of a town to deny a landowner the right to develop his property by refusing to approve the plat of such development is, by statute, made to rest upon specific standards of a statute or implementing ordinances. Thereafter, the approval or disapproval of the plat on the basis of controlling standards becomes an administrative act."

Likewise, in Section 53 of the same work, the author states:

> "When the statutes and ordinances have been complied with in making a plat of a subdivision, the active approval by a village board has been held to be ministerial, and such act may be enforced by a writ of mandamus."

4 Anderson, American Law of Zoning (Second Edition) s 26.04, (1976) states:

 © 2025 Thomson Reuters. No claim to original U.S. Government Works.

> "Mandamus to compel plat approval has been successful where the court, applying common-law principles, determined that when a subdivider has complied with all of the standards for plat approval, such approval is a ministerial act which the court may compel through a writ of mandamus . . .."

There are numerous cases which apply this same principle, among which are: Knutson v. State, 239 Ind. 656, 157 N.E.2d 469 (1959); People ex rel. Jackson & Morris, Inc. v. Smuczynski, 345 Ill.App. 63, 102 N.E.2d 168 (1951); People v. Village of Deerfield, 50 Ill.App.2d 349, 200 N.E.2d 120 (1964); Kling v. City Council of City of Newport Beach, 155 Cal.App.2d 309, 317 P.2d 708 (1957).

*511 [2] [3] Section 14 of the Broward County Plat Act, which pertains to the granting of approval of a plat provides that such approval may be "subject to such conditions as the governing body of the municipality and/or the Boards of County Commissioners or Public Instruction may deem to be in the best interest of the public." Without pursuing the validity of that provision which has not been attacked here, we hold that, having met all of the legal requirements for obtaining plat approval, the county must approve Narco's plat so that it can be recorded. Inasmuch as Narco has met all of the legal requirements for platting land, the county had no discretion to refuse this plat approval and the trial court was correct in issuing the Peremptory Writ of Mandamus.

We would distinguish our case of State ex rel. Zuckerman Corp. v. City of Miramar, supra. In Zuckerman the court expressly held:
"Here, clearly, the consideration of the plan involved the exercise of judgment and discretion. Did the plan meet the zoning requirements? Were the zoning requirements legal and binding? What was the effect of certain condemnation proceedings and other changes upon density requirements? Was the City estopped?" Id. at 175.

Whereas, in the case at bar, the property owner has done all the law required of him to entitle his plat to be recorded. At that point any discretion in the County Commission vanished.

There are some rather broad statements in Zuckerman which might lead one to conclude that mandamus never lies to require approval of a plat. While Zuckerman is clearly correct on its facts, to the extent it might be interpreted to hold that mandamus will never lie to require approval of a plat, we recede therefrom.

Upon remand the county shall approve the plat in question in accordance with the Peremptory Writ of Mandamus issued August 16, 1976, and such approval shall not contain any conditions relative to this litigation as were contained on the plat approval in the resolution of the County Commission dated March 1, 1977, and recorded in Official Records Book 6927, page 518, of the Public Records of Broward County.

Our disposition of the plenary appeal in case No. 1920 renders the issues raised in the interlocutory appeal No. 868 moot. Accordingly, the interlocutory appeal is dismissed.

DAUKSCH, J., concurs.

CROSS, J., concurs specially, with opinion.

CROSS, Judge, concurring specially:

I concur in the conclusion reached by the majority only because the parties to the instant appeal have stipulated that all necessary standards prescribed by law for subdivision plats have been met by the appellee.

I perceive broad areas of discretion granted to the Board of County Commissioners which in ordinary circumstances would render the remedy of mandamus inappropriate. E. g., Section 14, Ch. 28946, Laws of Florida, Special Acts 1953. Moreover, I see no reason to recede from State ex rel. Zuckerman-Vernon Corp. v. City of Miramar, 306 So.2d 173 (Fla. 4th DCA 1974). That case dealt with the situation wherein the petitioner sought mandamus before any action, either for or against the proposed subdivision, was undertaken by the city council. Even so, the court therein recognized that mandamus would lie to compel action, but could not mandate the course of such action where discretionary matters remained unresolved. The Zuckerman-Vernon case has no application to cases such as that sub judice where all prerequisites established by law for the approval of subdivision plats have been met and the approving body has withheld its approval arbitrarily.

All Citations

359 So.2d 509

 © 2025 Thomson Reuters. No claim to original U.S. Government Works.

Footnotes

1 Chapter 28946, Laws of Florida, Special Acts, 1953, as amended.

End of Document

© 2025 Thomson Reuters. No claim to original U.S. Government Works.

475 So.2d 984
District Court of Appeal of Florida,
Fourth District.

CITY NATIONAL BANK OF MIAMI, as Trustee, Petitioner,
v.
CITY OF CORAL SPRINGS, Florida, Respondent.

No. 85–678.
|
Sept. 18, 1985.
|
Rehearing Denied Oct. 14, 1985.

Synopsis

Bank, as trustee, sought certiorari and mandamus regarding conditions imposed by city for approval of plat for location of convenience store. The Circuit Court, Broward County, Linda L. Vitale, J., approved in part and disapproved in part city's resolution which approved proposed plat subject to three conditions. Bank petitioned for writ of certiorari. The District Court of Appeal, Hersey, C.J., held that: (1) city validly imposed conditions requiring ten-foot buffer strip of landscaped area along one boundary of plat and requiring entrances and exits to permit right turn only, and (2) conditioning issuance of building permit upon improvement of adjacent roadway to four lanes was appropriately stricken by trial court.

Certiorari denied.

West Headnotes (6)

[1] **Administrative Law and Procedure** Review for arbitrary, capricious, unreasonable, or illegal actions in general

Scope of review to be utilized by District Court of Appeal considering order of circuit court entered on review of administrative action is limited to determination of whether circuit court afforded procedural due process and applied correct law. U.S.C.A. Const.Amend. 14.

[2] **Zoning and Planning** Right to Permission, and Discretion

Once a party complies with all legal requirements for platting, there is no discretion in government authority to refuse approval of the plat.

[3] **Zoning and Planning** Other particular conditions or agreements

City validly imposed as condition of approval of proposed plat for convenience store a ten-foot buffer strip of landscaped area along one boundary of the plat, as reasonable application of section of city's code of ordinances.

[4] **Zoning and Planning** Other particular conditions or agreements

City's condition for approval of proposed plat for convenience store, that all entrances and exits indicated on the plat would be labeled "Right Turn Out Only," was validly based upon legal requirement that applicant demonstrate that there will be safe and adequate access to area sought to be platted.

[5] **Zoning and Planning** Streets, improvements and utilities

Zoning and Planning Determination

City's condition for approval of proposed plat for convenience store, that no building permit for construction would be issued until adjacent road had been improved to four-lane roadway, was in nature of building moratorium directed to specific parcel of land without meeting any of the formal requirements for such moratorium, and as such, was appropriately stricken by trial court, and provision of trial court's order permitting further hearings as to whether the condition could preclude landowner from any reasonable use of its property indefinitely was proper determination.

1 Case that cites this headnote

 © 2025 Thomson Reuters. No claim to original U.S. Government Works.

[6] **Administrative Law and Procedure** Findings; evidence

Whether or not holding of circuit court is supported by substantial competent evidence is not appropriate inquiry by District Court of Appeal on certiorari review of administrative action already reviewed by way of certiorari in the lower tribunal; District Court of Appeal reviews evidence presented to circuit court, and only when order or judgment has been entered without any competent evidence may District Court of Appeal find departure from essential requirements of law on basis of evidence or lack of it.

Attorneys and Law Firms

***985** Gerald L. Knight of Gustafson, Stephens, Ferris, Forman & Hall, P.A., Fort Lauderdale, for petitioner.

John M. Wynn of Paul J. McDonough, P.A., Coral Springs, for respondent.

Opinion

HERSEY, Chief Judge.

By petition for writ of certiorari we are asked to review an order of the circuit court approving in part and disapproving in part a resolution adopted by respondent city which approved a proposed plat subject to three conditions.

On approval of a plat for a Stop-N-Go market to be located on Royal Palm Boulevard in Coral Springs, Florida, the city commission imposed the following conditions:

1. A ten (10) foot buffer strip (landscape area) will be included on the plat along its northwesterly boundary;

2. All entrances and exits indicated on the plat will be labelled "Right Turn Out Only";

3. No building permit for construction will be issued until Royal Palm Boulevard has been improved (widened) to a four (4) lane roadway in the area immediately adjacent to this plat.

City National Bank of Miami sought certiorari and mandamus in the circuit court which upheld the first and second conditions and further directed the city to "delete condition No. 3 or provide further hearing on said issue." The bank then filed its petition here for further review.

[1] The scope of review to be utilized by a district court of appeal considering an order of the circuit court entered on review of administrative action is limited to a determination of whether the circuit court afforded procedural due process and applied the correct law. *City of Deerfield Beach v. Vaillant,* 419 So.2d 624 (Fla.1982); *Cherokee Crushed Stone, Inc. v. City of Miramar,* 421 So.2d 684 (Fla. 4th DCA 1982). No issues are raised based upon failure of the circuit court to afford procedural due process; thus, the sole inquiry is whether the correct law was applied.

[2] It is elementary that once a party complies with all legal requirements for platting there is no discretion in government authority to refuse approval of the plat. In *Broward County v. Narco Realty, Inc.,* 359 So.2d 509 (Fla. 4th DCA 1978), the proposition was explained in the following language:

> All persons similarly situated should be able to obtain plat approval upon meeting uniform standards. Otherwise, the official approval of a plat application would depend upon the whim or caprice of the public body involved. Yokley, in ***986** his work, Law of Subdivisions, § 52, states:
>
> > "Thus, while public policy requires municipal control of such development, nevertheless, the authority of a town to deny a landowner the right to develop his property by refusing to approve the plat of such development is, by statute, made to rest upon *specific standards of a statute or implementing ordinances.* Thereafter, the approval or disapproval of the plat on the basis of controlling standards becomes an administrative act."

Likewise, in Section 53 of the same work, the author states:

 © 2025 Thomson Reuters. No claim to original U.S. Government Works.

> "When the statutes and ordinances have been complied with in making a plat of a subdivision, the active approval by a village board has been held to be ministerial, and such act may be enforced by a writ of mandamus."

Id. at 510 (emphasis added).

The petitioner's position is that all legal requirements were met inasmuch as the city commission's additional requirements were not properly promulgated standards and therefore were not legal. Respondent city points out the existence of certain standards made applicable by virtue of its home rule powers, in addition to the landscape standard contained in a city ordinance applicable to condition one. *See* section 166.021, Florida Statutes (1983).

[3] **[4]** We hold that condition one is validly imposed as a reasonable application of section 20–513 of the Code of Ordinances of the City of Coral Springs. Condition two is similarly valid based upon the legal requirement that an applicant demonstrate that there will be safe and adequate access to the area sought to be platted. *Broward County v. Coral Ridge Properties, Inc.*, 408 So.2d 625 (Fla. 4th DCA 1981).

The circuit court held the third condition invalid on the basis that

> The Court simply finds that to include such a condition on the plat without any indication in the record as to when or if said portion of the roadway will be four-laned could preclude the landowner from any reasonable use of owner's property indefinitely. CITY OF CORAL SPRINGS accordingly directed to delete condition No. 3 or provide further hearing on said issue.

[5] Condition three was in the nature of a building moratorium directed to a specific parcel of land and without meeting any of the formal requirements for such a moratorium. As such it was appropriately stricken. The provision of the order permitting further hearings on this issue was a proper determination, *Page v. Lines*, 150 Fla. 433, 7 So.2d 599 (1942), the court thereby granting partial relief by way of mandamus.

[6] Whether or not the holding of the circuit court was supported by substantial competent evidence is not an appropriate inquiry by this court on certiorari review of administrative action already reviewed by way of certiorari in the lower tribunal. We review the evidence presented to the circuit court and only when an order or judgment has been entered without any competent evidence may we find a departure from the essential requirements of the law on the basis of the evidence or lack of it. Finding no such deficiency here we decline to grant certiorari.

CERTIORARI DENIED.

DELL and BARKETT, JJ., concur.

All Citations

475 So.2d 984, 10 Fla. L. Weekly 2169

End of Document

© 2025 Thomson Reuters. No claim to original U.S. Government Works.

KeyCite Yellow Flag - Negative Treatment
Disagreed With by Haver v. City of West Palm Beach, Inc., Fla.App. 4 Dist., June 10, 2020

127 So.3d 869
District Court of Appeal of Florida, Third District.

Lisa M. DETOURNAY, et al., Appellants,
v.
CITY OF CORAL GABLES, etc., et al., Appellees.

No. 3D11–2012
|
Dec. 4, 2013.

Synopsis
Background: Homeowners and homeowners' association brought action against city seeking declaratory judgment requiring enforcement of zoning code against nearby property and seeking injunction. The Circuit Court, Miami–Dade County, Ellen L. Leesfield, J., dismissed first count and found in favor of city on second count. Homeowners and association appealed.

[Holding:] The District Court of Appeal, Logue, J., held that under the doctrine of separation of powers, the city's discretion to file, prosecute, abate, settle, or voluntarily dismiss a building and zoning enforcement action was a purely executive function that could not be supervised by the courts.

Affirmed in part, reversed in part, and remanded.

Lagoa, J., filed dissenting opinion.

Procedural Posture(s): On Appeal; Motion to Dismiss.

West Headnotes (3)

[1] **Constitutional Law** Encroachment on Legislature
Constitutional Law Encroachment on Executive

Under the constitutional doctrine of "separation of powers," the judicial branch must not interfere with the discretionary functions of the legislative or executive branches of government absent a violation of constitutional or statutory rights.

11 Cases that cite this headnote

[2] **Constitutional Law** Particular Issues and Applications
Declaratory Judgment Zoning ordinances
Zoning and Planning Power and duty to enforce

City's discretion to file, prosecute, abate, settle, or dismiss a building and zoning enforcement action against property owner was an executive function that could not be supervised by the courts, absent the violation of a specific constitutional provision or law, and thus, under separation of powers doctrine trial court lacked jurisdiction to hear declaratory judgment action by nearby property owners against city seeking enforcement of zoning code.

10 Cases that cite this headnote
More cases on this issue

[3] **Constitutional Law** Encroachment on Executive
Constitutional Law Encroachment on Executive

Separation of powers is a constitutional doctrine that extends across all procedural vehicles that might be used to challenge executive action.

4 Cases that cite this headnote

Attorneys and Law Firms

***870** Andrew Dickman, P.A., and Andrew W.J. Dickman, Naples, for appellants.

Akerman Senterfitt and Gerald B. Cope, Jr., Elizabeth M. Hernandez, and Jennifer Cohen Glasser, Miami, for appellee City of Coral Gables; Tew Cardenas, Santiago D. Echemendia, Miami, and Maria P. Gonzalez for intervenor-appellee Amace Properties, Inc.

Before SHEPHERD, C.J., and LAGOA and LOGUE, JJ.

 © 2025 Thomson Reuters. No claim to original U.S. Government Works.

Opinion

LOGUE, J.

Lisa Detournay and Brenda Randol, who own homes in Coral Gables, and their homeowners' association, the Rivera Neighborhood Association, Inc., (hereinafter "the Homeowners") filed a two-count complaint to require the City of Coral Gables to prosecute an enforcement action against nearby property owned by Amace Properties, Inc. The trial court dismissed the first count for lack of standing. Although it held the Homeowners had no standing, the trial court nevertheless entered a judgment against the Homeowners on the second count. On appeal by the Homeowners, we affirm the dismissal of count one, albeit on different grounds, and we direct the dismissal of count two. Under the doctrine of separation of powers, the City's discretion to file, prosecute, abate, settle, or voluntarily dismiss a building and zoning enforcement action is a purely executive function that cannot be supervised by the courts, absent the violation ***871** of a specific constitutional provision or law.

FACTS AND PROCEDURAL HISTORY

Amace Properties, Inc. owns commercial property on one of the branches of the canals that run through the City to Biscayne Bay. For the most part, these canals are lined with expensive homes. From its property, Amace operates what both the City and the Homeowners maintain is a private yacht basin that rents slips and moorings in a manner that violates various provisions of the City's building and zoning code. In April 2004, the City issued three administrative citations against Amace. After filing these enforcement actions, however, the City held them in abeyance for years while attempting to settle them as part of a proposed re-development of Amace's property. Unhappy at the City's failure to vigorously prosecute Amace, the Homeowners' filed the instant case to force the City to pursue its enforcement actions. Count one requested a declaratory judgment and count two requested an injunction.

The tenor of the Homeowners' concerns are apparent from the following language in the complaint:

> 46. Unless restrained, defendant city will continue to ignore its zoning regulations, contrary to the express language in the zoning code, and continue to allow the operation of the illegal private yacht basin at issue here.
>
> 47. Immediate and irreparable injury, loss and damage for which there is no adequate remedy at law will result to the plaintiffs by this action of the city because this private yacht basin use will continue to operate in violation of the law.
>
> 48. The city's zoning code has as its basis the government's police powers—to protect the public health safety and welfare. Where the city's zoning code is ignored, the guarantee of the city's protection of the public health, safety and welfare is also ignored and the public is irreparably harmed.
>
> 49. The refusal of the City of Coral Gables to enforce its zoning code, where three notices of violation were issued and the city attorney confirmed the violation, creates an injury to plaintiffs and all Coral Gables citizens that cannot be compensated by money or remedied in any other manner except by requiring enforcement of the violated code provision.
>
> 50. Plaintiffs as residents of the City of Coral Gables have a legitimate and reasonable expectation that all citizens will be treated the same when it comes to the enforcement of the city's zoning code. Plaintiffs reasonably expect that certain citizens and/or property owners are not "more equal" than others when the city seeks to enforce its zoning code.
>
> 51. Plaintiffs cannot seek enforcement of the city's zoning code where the city refuses to do so.
>
> 52. Plaintiff's injury cannot be "cured" except by requiring the city to enforce its zoning code, follow its law and direct the property owner to cease its illegal use or to obtain the required conditional use approval, thus legalizing the illegal use.

Amace intervened in the lawsuit as a defendant, although the Homeowners made no allegations against Amace. In its answer, motion to dismiss, and renewed motion to dismiss, the City raised the holding of *Trianon Park Condominium Association, Inc. v. City of Hialeah*, 468 So.2d 912, 922 (Fla.1985), asserting that the Homeowners were not entitled to the relief sought because the City had discretion whether and how to prosecute violations of ***872** its zoning ordinances. On the second day of trial, the trial court entered the order and final judgment on appeal, dismissing count one for lack of standing and finding in favor of the City on count two. This appeal followed.

 © 2025 Thomson Reuters. No claim to original U.S. Government Works.

DISCUSSION

We agree with the dismissal of count one, albeit on grounds different than that relied upon by the trial judge. Rather than basing the dismissal on standing, we think the simplest and most direct explanation of why dismissal is proper is provided by the principles of separation of powers discussed in *Trianon* and its progeny. Count two, seeking injunctive relief, should be dismissed for the same reason. [1]

In *Trianon,* owners of units in a condominium building that had been constructed in an allegedly grossly negligent manner sued the City of Hialeah. They sought to hold the City liable for failure to enforce its building and zoning laws against the developer who built the condominium. *Id.* at 915. The Florida Supreme Court held that a government entity is not liable in tort to individual property owners for the failure to enforce provisions of building and zoning codes. *Id.* at 919. Although *Trianon* involved a suit for torts, its reasoning and holding apply equally well to suits like the instant case, where private parties seek a declaratory judgment and injunction against a city regarding the failure of the city to enforce its building and zoning codes against another private party.

In holding a city cannot be sued by a private party because it failed to enforce its building and zoning laws against another private party, the Court observed that "certain discretionary functions of government are inherent in the act of governing and are immune from suit." *Id.* at 918. In this regard, the Court stated:

> We find that the enforcement of building codes and ordinances is for the purpose of protecting the health and safety of the public, not the personal or property interests of individual citizens. The discretionary power to enforce compliance with the building code flows from the police power of the state. In that regard, this power is no different from the discretionary power exercised by the police officer on the street in enforcing a criminal statute, the discretionary power exercised by a prosecutor in deciding whether to prosecute, or the discretionary power exercised by a judge in making the determination as to whether to incarcerate a defendant or place him on probation. Statutes and regulations enacted under the police power to protect the public and enhance the public safety do not create duties owed by the government to citizens as individuals without the specific legislative intent to do so.

Id. at 922; *see also Carter v. City of Stuart,* 468 So.2d 955, 957 (Fla.1985) ("The amount of resources and personnel to be committed to the enforcement of this ordinance was a policy decision of the city. The city has the right to set its priorities in reference to law enforcement.").

[1] This immunity from suit is often called sovereign immunity. *Trianon,* 468 So.2d at 922. It bears repeating, however, that the reason courts cannot generally supervise the executive when it is deciding ***873** when and how to enforce specific laws is not based on the archaic notion that "the king can do no wrong." Instead, it is founded on the doctrine of separation of powers, one of the structural pillars upon which American freedoms rest: "under the constitutional doctrine of separation of powers, the judicial branch must not interfere with the discretionary functions of the legislative or executive branches of government absent a violation of constitutional or statutory rights." *Id.* at 918. To hold otherwise, the Court reasoned, "would require the judicial branch to second guess the political and police power decisions of the other branches of government and would violate the separation of powers doctrine." *Id.*

[2] Turning to the instant case, the City's discretion to file, prosecute, abate, settle, or voluntarily dismiss a building and zoning enforcement action is analogous to a prosecutor's discretion to file, prosecute, abate, settle, or dismiss a criminal or civil lawsuit. *Id.* at 922. The prosecutor's discretion in this regard is a pure executive function that cannot be supervised by the courts, absent the violation of a specific constitutional provision or law. [2]

It follows in the instant case that the City's discretion to file, prosecute, abate, settle, or dismiss a building and zoning enforcement action against Amace is an executive function that cannot be supervised by the courts, absent the violation of a specific constitutional provision or law.

Our decision in this regard dovetails with the cases holding that a writ of mandamus cannot issue against a city on behalf of a private party to require the city to enforce its building and zoning laws against another private party. *See Alexander v. City of Coral Gables,* 745 So.2d 1004, 1005 (Fla. 3d DCA 1999) (holding that mandamus does not lie to compel a city to enforce its zoning regulations, because the decision whether to enforce is discretionary); *Centrust Sav. Bank v. City of Miami,* 491 So.2d 576, 577 (Fla. 3d DCA 1986) (holding that a writ of mandamus does not lie to compel a city to enforce its building code against third parties); *RHS Corp. v. City of Boynton Beach,* 736 So.2d 1211, 1213 (Fla. 4th DCA 1999) (holding that mandamus does not lie to compel a city to enforce its zoning regulations, because the decision whether to enforce is discretionary, rather than ministerial).

The few cases holding to the contrary pre-date *Trianon* and appear not to have considered or followed the controlling principle of separation of powers. *See* ***874** *Fortunato v. City of Coral Gables,* 47 So.2d 321, 323 (Fla.1950) (reversing the denial of a temporary injunction sought to prevent the city from issuing a building permit); *Rebholz v. Floyd,* 327 So.2d 806, 809 (Fla. 2d DCA 1976) (reversing for issuance of a writ of mandamus to enforce zoning regulations).

[3] While the cases we rely on arose in torts, mandamus and criminal law, the governing principles apply equally well to injunctions and declaratory actions. Separation of powers is a constitutional doctrine that extends across all procedural vehicles that might be used to challenge executive action. It would be a hollow idea if it applied only to some procedures and not others. In this regard, the case of *Kempfer v. St. Johns River Water Management District,* 475 So.2d 920 (Fla. 5th DCA 1985), is easily distinguishable. *Kempfer* held only that sovereign immunity does not bar property owners' rights to seek declaratory relief to construe a deed and easement that they conveyed to a government. It involved the government's legal rights and responsibilities as a property owner. It did not implicate the government's discretion whether or not to prosecute enforcement actions against third parties. Our decision does not address the ability of the Homeowners to bring a direct action against Amace because the Homeowners have filed no complaint and requested no relief against Amace; therefore, the issue of the validity of such a lawsuit is not before us.

CONCLUSION

We are sympathetic to the frustration of the Homeowners at the City's decision to abate its enforcement action against Amace, but we must defer to the City's right to exercise its discretion to seek a settlement that might accommodate the concerns of all parties. In this situation, the courts have no role in advising or directing a government when, if, and how to maintain an administrative enforcement action: the role of the courts is limited to adjudicating any such action when it is properly at issue before them. To the extent that the Homeowners seek to have the City desist in its settlement efforts and instead vigorously prosecute the enforcement actions, they need to knock on the doors of city hall, not the courthouse.

For the foregoing reasons, we affirm the trial court's decision to dismiss, although on the grounds stated herein. We reverse that portion of the final judgment ruling on the merits because the court should not have reached that issue. Instead, count two should also be dismissed.

Affirmed, in part, reversed, in part, and remanded for proceedings consistent with this decision.

SHEPHERD, C.J., concurs.

LAGOA, J. (dissenting).

I respectfully disagree with the majority's decision to affirm the trial court. The plaintiffs, Lisa Detournay ("Detournay"), Brenda Randol ("Randol"), and the Riviera Neighborhood Association, Inc. ("RNA") (collectively, "Homeowners") appeal an order and final judgment dismissing with prejudice Count I (declaratory relief), and finding in favor of the defendant, City of Coral Gables (the "City"), on Count II (injunctive relief), of their second amended complaint. For the following reasons, I would reverse.

I. *FACTUAL AND PROCEDURAL HISTORY*

Detournay and Randol each own a home on Caballero Boulevard in Coral Gables. Their homes sit along what is known as the Mahi Waterway. The Mahi Waterway runs through the City and provides access to Biscayne Bay. Defendant/intervenor, ***875** Amace Properties, Inc. ("Amace"), owns commercial property on the Mahi

 © 2025 Thomson Reuters. No claim to original U.S. Government Works.

Waterway, west of Detournay and Randol's homes. Amace rents spaces behind its property to boat owners, allowing them to tie up their boats along bulkheads. RNA is a homeowners association "representing the interests of its members who are concerned with protecting and preserving the residential neighborhood in the area of and adjacent to" Amace's property.

The Homeowners filed a Second Amended Complaint for declaratory and injunctive relief pursuant to section 86.021, Florida Statutes (2009),[3] seeking to end the City's abatement of its zoning regulation enforcement against Amace. The Homeowners assert that Amace's rental of the boat spaces constitutes the operation of an "illegal private yacht basin" under the City's zoning regulations.

In Count I, the Homeowners seek "a declaration regarding whether the private yacht basin is operating pursuant to the City's zoning regulations and whether the City acted contrary to the requirements of its zoning regulations when it failed to close the illegal private yacht basin." In Count II, the Homeowners seek "permanent injunctive relief that would enjoin the operation of the private yacht basin," if the trial court finds in Count I that Amace is operating a private yacht basin contrary to the City's zoning regulations and that "the city acted contrary to the requirements of its zoning regulations when it failed to close the illegal private yacht basin."

The Homeowners specifically allege that Amace's use of its property to rent out the boat spaces "has caused Plaintiffs to suffer from boat congestion, noise, pollution, canal bank erosion, wake damage and a diminution of their privacy and the tranquil use of their property."

Amace's Answer raised several affirmative defenses, including estoppel, laches, and that the yacht basin, which was established in 1947, is a legally non-conforming use permitted under the City's code. The City's Answer raised various affirmative defenses, including that municipalities have discretion to enforce their zoning regulations and the City did not abuse its discretion, that the Homeowners' claim for injunctive relief fails to state a cause of action, that injunctive relief is an improper remedy, and that the Homeowners have failed to exhaust their administrative remedies.

On the morning of the third day of trial,[4] the City filed a renewed motion to dismiss and memorandum of law. For the first time, the City argued that the Homeowners lacked standing to assert their claims because they had not alleged, and could not establish, that they had suffered a special injury as a result of the City's ***876** failure to enforce its zoning code. The City also argued that the Homeowners' claims failed because municipalities have discretion as to how and when to enforce their zoning regulations.

The Homeowners objected, arguing that the issue of standing could not be raised at this point in the trial. The trial court conducted a hearing on the City's motion, and heard testimony from two of the City's witnesses—a City zoning official and Armando Guerra, Amace's president. Both witnesses testified to the history of various negotiations and alleged agreements between Amace and the City with regard to Amace's use of its property.

At the conclusion of Guerra's testimony, the trial court dismissed Count I, finding that the Homeowners lacked standing. At the conclusion of the zoning official's testimony, the trial court concluded that the City had not abused its discretion in the enforcement of its zoning regulations.

The trial court subsequently entered the order and final judgment on appeal. In its written order, the trial court dismissed Count I with prejudice, finding that the Homeowners lacked standing absent evidence of a special injury. Specifically, the trial court found "that there is no standing for these private citizens to bring this action absent evidence of a special injury.... Because Plaintiffs have not and cannot establish special injury, the Court finds, as a matter of law, that under the circumstances presented, these Plaintiffs lack standing as to Count I." The trial court further found in favor of the City on Count II, concluding that, based on the testimony heard in the case, the City had not abused its discretion. This appeal ensued.

II. *ANALYSIS*

The trial court dismissed Count I for lack of standing. "Whether a party is the proper party with standing to bring an action is a question of law to be reviewed *de novo*." *FCD Dev., LLC v. S. Fla. Sports Comm., Inc.*, 37 So.3d 905, 909 (Fla. 4th DCA 2010) (quoting *Westport Recovery Corp. v. Midas*, 954 So.2d 750, 752 (Fla. 4th DCA 2007)), *review denied*, 63 So.3d 750 (Fla.2011). An appellate court reviews an order of dismissal based on lack of standing *de novo*. *Wheeler v. Powers*, 972 So.2d 285, 288 (Fla. 5th DCA 2008); *Sanchez v. Century Everglades, LLC*, 946 So.2d 563, 564 (Fla. 3d

DCA 2006). "In determining whether to dismiss a complaint for lack of standing, [the Court] must confine [its] review to the four corners of the complaint, draw all inferences in favor of the pleader, and accept all well-pled allegations in the complaint as true." *Payne v. City of Miami,* 927 So.2d 904, 906 (Fla. 3d DCA 2005).

As discussed below, the trial court erred in dismissing Count I for three reasons. First, the issue of standing was waived by the City. This Court has stated that a challenge to a party's standing can be waived if not raised as an affirmative defense. *See Stratton v. 6000 Indian Creek, LLC,* 95 So.3d 334, 336 (Fla. 3d DCA 2012) (standing is an affirmative defense that can be waived); *Bank of New York Trust Co. v. Rodgers,* 79 So.3d 108 (Fla. 3d DCA 2012) (reversing final judgment entered in favor of defendants based on plaintiff's lack of standing where there was no denial or defense raised in defendants' pleadings concerning standing); *see also Phadael v. Deutsche Bank Trust Co. Americas,* 83 So.3d 893, 895 (Fla. 4th DCA 2012) ("We have previously explained that lack of standing is an affirmative defense that must be raised by the defendant and the failure to raise it generally results in waiver."), *review denied,* 97 So.3d 824 (Fla.2012); *Kissman v. Panizzi,* 891 So.2d 1147, 1150 (Fla. 4th DCA 2005) (same). ***877** *But see Maynard v. Fla. Bd. of Educ.,* 998 So.2d 1201 (Fla. 2d DCA 2009) (holding that standing need not be raised only by means of an affirmative defense). Here, the City failed to raise standing as an affirmative defense and only asserted lack of standing on the third day of trial. I would therefore find that the City waived the issue of standing by failing to raise it as an affirmative defense, and that the trial court erred in considering the City's motion to dismiss on that basis at such a late date in the proceedings. [5]

Second, even if a challenge to standing had not been waived, the Declaratory Judgment Act does not require that a special injury be established in order to maintain a claim under the Act, as long as the elements of the Act itself are established. *See Combs v. City of Naples,* 834 So.2d 194, 197 (Fla. 2d DCA 2002) ("Section 86.021, which addresses standing to seek a declaratory judgment, contains no requirement that a special injury be established."). "[I]n order to properly invoke the jurisdiction of the circuit court, the party seeking a declaration must not only show that he is in doubt as to the existence or nonexistence of some right or status, but also that there is a bona fide, actual, present, and practical need for the declaration [.]" *State, Dep't of Envtl. Prot. v. Garcia,* 99 So.3d 539, 544 (Fla. 3d DCA 2011) (citations omitted). [6]

Accepting all well-pled allegations in the Homeowners' complaint as true, I would find that the Homeowners are in doubt as to the existence or nonexistence of a right under the City's zoning ordinances and that there exists a bona fide, actual, present and practical need for the declaration. Because the Homeowners' interests are sufficient to confer standing to seek a declaratory judgment here, I would find that the trial court erred in dismissing Count I for lack of standing.

Finally, even if the City had not waived the issue of standing and even if special damages were required under Florida's Declaratory Judgment Act, I nonetheless would reverse the trial court's order as it relates to Detournay and Randol because they sufficiently alleged special damages to allow them to maintain a cause of action. The seminal cases addressing the issue of a private citizen's right to seek enforcement of a municipal zoning ordinance are *Boucher v. Novotny,* 102 So.2d 132 (Fla.1958), and *Renard v. Dade County,* 261 So.2d 832 (Fla.1972). In *Boucher,* the Florida Supreme Court established the now well-settled rule that in order for a private citizen to maintain an action to enforce a valid municipal zoning ordinance, he or she must allege facts showing "special damages." 102 So.2d at 135. The Court explained:

> We, therefore, align ourselves with the authorities which hold that one seeking redress, either preventive or corrective, against an alleged violation of a municipal zoning ordinance must allege and prove *special damages peculiar to himself differing in kind as distinguished from damages differing in degree* suffered by the community as a whole.

Id. (emphasis added).

In *Renard,* the Court further clarified that the " 'special damage' rule of the ***878** *Boucher* case is an outgrowth of the law of public nuisance. Zoning violations have historically been treated as public nuisances not subject to suit by an individual unless that individual has suffered damages different in kind and degree from the rest of the community." 261 So.2d at 835 (footnote omitted). Significantly, however, the Court noted that "in the twenty years since the *Boucher* decision, changed conditions, including increased population

 © 2025 Thomson Reuters. No claim to original U.S. Government Works.

growth and density, *require a more lenient application of that rule.*" *Id.* at 837–38 (emphasis added). *Accord Skaggs–Albertson's v. ABC Liquors, Inc.*, 363 So.2d 1082, 1088 (Fla.1978) (stating that the "special damage" rule still has vitality in actions seeking to enforce a valid zoning ordinance, albeit with a more liberal application).

Here, the Homeowners allege that Amace's rental of the boat spaces "has caused Plaintiffs to suffer from boat congestion, noise, pollution, canal bank erosion, wake damage and a diminution of their privacy and the tranquil use of their property." The Second Amended Complaint also states that Detournay and Randol live "immediately to the east" of Amace's property.

Applying *Renard's* mandate of a more lenient application of the *Boucher* rule, I would find that Detournay and Randol sufficiently alleged special damages particular to them that differ in kind, rather than simply degree, from those suffered by other homeowners within Coral Gables whose properties do not lie along the Mahi Waterway and who therefore are not uniquely affected by the yacht basin's activities.[7] *Compare Kagan v. West*, 677 So.2d 905 (Fla. 4th DCA 1996) (Pariente, J.) (finding that plaintiffs alleged and proved special damages different from those suffered by the community as a whole where plaintiffs shared a private road with defendant property owner), *with Centrust Sav. Bank v. City of Miami*, 491 So.2d 576 (Fla. 3d DCA 1986) (no standing where plaintiff made no claim that it had suffered a special injury apart from the injury suffered by any member of the general public as a result of alleged building code violations), *and Cont'l Con–Dev Co. v. Shallberg*, 267 So.2d 40 (Fla. 4th DCA 1972) (finding that where plaintiff brought suit on behalf of himself and all other property owners in the city, he did not have damages different in kind from that of all the other property owners in the general area where his house was across the street from alleged zoning violation).

Additionally, I believe that the trial court erred in making a finding on the merits in favor of the City on Count II (injunctive relief). As pled, Count II is dependent upon a declaration in favor of the Homeowners in Count I.[8] Therefore, ***879** once the trial court determined that the Homeowners lacked standing to proceed with Count I, the trial court was necessarily precluded from making a finding on Count II.

Turning to the majority, I cannot agree with its reliance upon the doctrine of separation of powers—an issue not raised by either party before the trial court or this Court—in order to affirm the result below. Not only does the majority misapply the doctrine of separation of powers to the Homeowners' allegations, it also fails to address the issue of the Homeowners' standing.

The majority asserts that the trial court properly dismissed Count I (declaratory relief), not on the grounds stated by the trial court—lack of standing—but rather, under the "controlling principle of separation of powers." Specifically, the majority states that the City's discretion to prosecute a zoning violation is a purely executive function that cannot be supervised by the courts. The majority relies upon *Trianon Park Condominium Association v. City of Hialeah*, 468 So.2d 912 (Fla.1985), for this proposition.

First, the issue of separation of powers was not raised by the City or Amace before the trial court or this Court. At best, the City included a citation to *Trianon* in its Answer Brief bereft of any reference to the separation of powers doctrine.[9] Moreover, as this issue was not raised on appeal, Detournay and Randol have not been given an opportunity to address the issue of separation of powers.

Notwithstanding the City's failure to raise or preserve this issue, I will address the majority's reliance on the *Trianon* case. In *Trianon*, the issue was whether the City of Hialeah could be held liable in tort to condominium owners for damage to condominium units caused by building defects on the basis that the City of Hialeah's building inspectors were negligent in their inspections during construction. In holding that the City of Hialeah could not be held liable, the Court reasoned that enforcement of building codes and ordinances constituted a discretionary governmental function for which there has never been a duty of care, and with which the judicial branch must not interfere. 468 So.2d at 917–18, 922.

Trianon, and the doctrine of separation of powers enunciated therein, however, do not apply in the instant case. First, *Trianon* concerns a cause of action at law for damages. Here, the Homeowners did not seek a remedy at law, but rather, sought declaratory and injunctive relief. *See Boucher*, 102 So.2d at 134 (stating that a citizen who suffers special damages resulting from a zoning violation "is entitled to injunctive relief in the absence of an adequate legal remedy"). Therefore the rules of governmental tort liability would not apply to Appellants' claims. *See Trianon*, 468 So.2d at 917 ("[F]or there to be governmental **tort liability,** there must be either an underlying common law or statutory duty of care

with respect to the alleged negligent conduct. For certain basic judgmental or discretionary governmental ***880** functions, there has never been an applicable duty of care.") (emphasis added).

Second, the "special damage" rule set forth in *Boucher* is an outgrowth of the law of public nuisance, which states that because a public nuisance is an offense against all citizens, it is subject to abatement only on motion of the state. *Renard,* 261 So.2d at 835 n. 5; *Skaggs–Albertson's,* 363 So.2d at 1088 ("Inasmuch as a public nuisance was an offense against the state and, accordingly, was subject to abatement on motion of the proper governmental agency, an individual could not maintain an action for a public nuisance unless he suffered some special damage from the public nuisance."). But, as discussed above, if an individual can show some special damage from an alleged zoning violation, he or she then has standing to maintain an action to enforce the zoning ordinance in equity against both a municipality and a private party. *See Skaggs–Albertson's,* 363 So.2d at 1088; *Renard,* 261 So.2d at 837; *Boucher,* 102 So.2d at 135; *Page v. Niagara Chem. Div. of Food Mach. & Chem. Corp.,* 68 So.2d 382 (Fla.1953); *Bozeman v. City of St. Petersburg,* 74 Fla. 336, 76 So. 894 (1917). In short, once special damages are shown, enforcement of the zoning ordinance is no longer an action purely within the discretion of the state.

Thus, if the Homeowners prevail on the merits, *Boucher* and its progeny entitle the Homeowners to a judicial injunction prohibiting Amace from continuing to operate an allegedly illegal yacht basin; *Trianon* likely prohibits the Homeowners from seeking damages from the City for its reluctance to enforce its zoning regulations, but it says nothing about the Homeowners' ability to stop the activity itself.

Additionally, the majority addresses itself to Count I (declaratory relief). But if separation of powers were a legally valid reason to dismiss the complaint, that basis would apply only to Count II (injunctive relief), in which the Homeowners sought enforcement of the City's zoning laws against the City and Amace. Notably, the City did not raise the issue of "separation of powers" either before the trial court or this Court, as it relates to either Count I or Count II. As Count II is pled as dependent on a finding in favor of the Homeowners in Count I, and the majority fails to discuss the issue of standing, which was the basis of the trial court's ruling on Count I below, and fails to address the Florida Supreme Court's opinions of *Boucher* and *Renard,* [10] it is unclear how the majority can reach the issue at all.

Because there is no support for this alternative theory in the record, it is improper for the majority to rely upon it in affirming the trial court's dismissal of Count I. *See Robertson v. State,* 829 So.2d 901, 907–08 (Fla.2002) ("The key to the application of [the Tipsy Coachman doctrine] of appellate efficiency is that there must have been support for the alternative theory or principle of law in the record before the trial court."); ***881** *State v. Gerry,* 855 So.2d 157, 163 n. 5 (Fla. 5th DCA 2003).

The majority further overlooks the fact that Amace was a party to this suit. Even if the Homeowners could not seek judicial relief against the City, they retain their ability to seek a declaration that Amace's use of its property violates the local zoning ordinances and they retain their ability to enjoin Amace from further alleged illegal activity. *See e.g., Boucher; Renard; Skaggs–Albertson's.*

Indeed, the analysis by the majority imports the tort-based sovereign immunity doctrine of *Trianon* into an area long recognized by the Florida Supreme Court as subject to judicial enforcement against both municipalities and private parties. *See Boucher; Renard; Skaggs–Albertson's; Fortunato.* The majority expands the law of Florida here by extending the concept of municipal immunity from tort liability and damages to municipal immunity from declaratory and injunctive relief-and it immunizes Amace's conduct along the way.

Finally, the majority's attempt to cast aside *Fortunato v. City of Coral Gables,* 47 So.2d 321 (Fla.1950), violates the Florida Supreme Court's express statement that it does not overrule precedent "*sub silentio.*" *See Arsali v. Chase Home Finance LLC,* 121 So.3d 511 (Fla.2013). It may well be that the Florida Supreme Court will move the law of this State to where the majority believes it should be, but it is beyond our jurisdiction to recede from that Court's existing precedent.

III. *CONCLUSION*

For the reasons stated above as to Count I, I find that the City waived the issue of standing. Alternatively, I conclude that special damages were not required to be pled. Moreover, even if special damages were required, Detournay and Randol sufficiently alleged special damages. Lastly, I find that the trial court erred in ruling on Count II, which, as pled, was entirely dependent on Count I. Accordingly, I dissent from

 © 2025 Thomson Reuters. No claim to original U.S. Government Works.

the majority's decision and would reverse the order and final judgment on appeal.

All Citations

127 So.3d 869, 38 Fla. L. Weekly D2552

Footnotes

1 Although we respect the dissent's concern in this regard, we believe that the City's two and one half page argument in their answer brief citing to *Trianon* and contending "the City has prosecutorial discretion in whether or how to proceed" with its enforcement actions, coupled with the Homeowners' argument in their reply brief that the City should not have such discretion, is more than sufficient to raise the application of *Trianon* in this appeal.

2 *See Valdes v. State,* 728 So.2d 736, 738–39 (Fla.1999) ("This Court has long held that as the prosecuting officer, the state attorney has 'complete discretion' in the decision to charge and prosecute, and the judiciary cannot interfere with this 'discretionary executive function.' ") (citations omitted); *State v. Bloom,* 497 So.2d 2, 3 (Fla.1986) ("Under Florida's constitution, the decision to charge and prosecute is an executive responsibility, and the state attorney has complete discretion in deciding whether and how to prosecute."); *Johnson v. State,* 314 So.2d 573, 577 (Fla.1975) ("[T]he discretion of the Attorney General in choosing whether to prosecute or not to prosecute, or to abandon a prosecution already started, is absolute."); *Bess v. Reno,* 563 So.2d 95, 96 (Fla. 3d DCA 1990) (holding that the trial court did not err in refusing, in effect, to mandamus the state attorney to institute extradition proceedings); *Thompson v. Reno,* 546 So.2d 83, 84 (Fla. 3d DCA 1989) (holding that the state attorney's discretion extends to civil actions as well as criminal actions); *State v. Jogan,* 388 So.2d 322, 323 (Fla. 3d DCA 1980) (holding that the decision to nolle prosequi is vested solely in the state attorney's discretion and cannot be made or supervised by the courts); *State v. C.C.B.,* 465 So.2d 1379, 1381 (Fla. 5th DCA 1985) ("In the criminal justice system the discretion to prosecute or not is a pre-trial posture vested solely in the state attorney's discretion.").

3 That statute states as follows:

> **86.021. Power to construe**
>
> Any person claiming to be interested or who may be in doubt about his or her rights under a deed, will, contract, or other article, memorandum, or instrument in writing or whose rights, status, or other equitable or legal relations are affected by a statute, or any regulation made under statutory authority, or by municipal ordinance, contract, deed, will, franchise, or other article, memorandum, or instrument in writing may have determined any question of construction or validity arising under such statute, regulation, municipal ordinance, contract, deed, will, franchise, or other article, memorandum, or instrument in writing, or any part thereof, and obtain a declaration of rights, status, or other equitable or legal relations thereunder.

4 During the first day and a half of trial, the parties attempted to reach a settlement agreement. On appeal, the Homeowners argue that the trial court erred in failing to enforce the alleged settlement agreement reached by the parties. I would find this argument without merit.

5 Although not necessary to my conclusion on this point, I would note that the Homeowners' argument that they were denied due process when the trial court considered the City's "surprise" renewed motion to dismiss without notice has merit.

 © 2025 Thomson Reuters. No claim to original U.S. Government Works.

6 "The Florida Declaratory Judgment Act, chapter 86, Florida Statutes (2009), is remedial in nature and should be broadly construed." *Garcia,* 99 So.3d at 544.

7 In contrast, RNA did not allege special damages sufficient to maintain suit. The second amended complaint alleges that the RNA is a "homeowners association representing the interests of its members who are concerned with protecting and preserving the residential neighborhood in the area of and adjacent to the illegal private yacht basin." Homeowners who do not live on the Mahi Waterway cannot argue that they suffer special damages resulting from Amace's activity. Had the issue not been waived, and if a declaratory judgment proceeding required special damages, I would have affirmed as to RNA.

8 In relevant part, Count II states as follows:

> If the court declares (in Count 1) that (1) the private yacht basin is operating contrary to the city's zoning regulations and (2) the city acted contrary to the requirements of its zoning regulations when it failed to close the illegal private yacht basin, plaintiffs request that the court grant permanent injunctive relief that would enjoin the operation of the private yacht basin which is the subject of this action.

9 Specifically, the sole reference made by the City to *Trianon* in its Answer Brief is as follows: "As the court found, municipalities have discretion as to enforcement of its codes. *See Trianon Park Condo. Assoc. v. City of Hialeah,* 468 So.2d 912 (Fla.1985) (enforcement of law by regulatory officials such as building inspectors is discretionary)." (Answer Brief, p. 27). "In order to be preserved for further review by a higher court, an issue must be presented to the lower court and the specific legal argument or ground to be argued on appeal or review must be part of that presentation if it is to be considered preserved." *Tillman v. State,* 471 So.2d 32, 35 (Fla.1985).

10 The majority distinguishes the Florida Supreme Court's opinion in *Fortunato v. City of Coral Gables,* 47 So.2d 321 (Fla.1950), by stating that it pre-dated *Trianon* and did not consider the principle of separation of powers. In *Boucher,* however, the Court explained that in *Fortunato* the plaintiff "carefully and in thorough detail delineated special and peculiar damages to himself which resulted from the violation of the setback requirements by his next door neighbor," which entitled him to proceed in equity. *Boucher,* 102 So.2d at 136. More significantly, *Fortunato* is still good law and the fact that it pre-dates *Trianon* is of no moment because the Florida Supreme Court does not overrule itself *sub silentio. Arsali v. Chase Home Fin. LLC,* 121 So.3d 511 (Fla.2013); *see Puryear v. State,* 810 So.2d 901 (Fla.2002).

End of Document

© 2025 Thomson Reuters. No claim to original U.S. Government Works.

481 So.2d 95
District Court of Appeal of Florida,
Third District.

John GUNN and Peter H. Wendschuh, Petitioners,
v.
BOARD OF COUNTY COMMISSIONERS, DADE COUNTY, Florida and Ciudamar Yacht Club, Inc., Respondents.

No. 85–1873.
|
Jan. 7, 1986.

Synopsis

County commission granted special exception for construction of softball field on premises operated as a private country club. On appeal, the Circuit Court for Dade County, Appellate Division, Moie J.L. Tendrich, Joesph N. Nadler and Harold Solomon, JJ., affirmed, and petition for certiorari was filed. The District Court of Appeal, Schwartz, C.J., held that county commission acted within its discretion in determining that second proposal's repositioning of home plate to a point where outfield had been located in previous proposal, at a greater distance from nearby residences, and repositioning of outfield to point where home plate had been was a substantial change of circumstances so that granting of special exception to allow second proposal was not barred by res judicata on basis of earlier denial of special exception for softball field.

Petition denied.

Procedural Posture(s): On Appeal.

West Headnotes (2)

[1] **Zoning and Planning** Conclusiveness and collateral attack

Prior zoning ruling is not binding when there has been substantial change of circumstances, and determination of whether such a change has in fact occurred lies primarily within discretion of zoning authority itself.

2 Cases that cite this headnote

[2] **Zoning and Planning** Effect of determination; res judicata and collateral estoppel

County commission acted within its discretion in determining that second proposal's repositioning of home plate to a point where outfield had been located in previous proposal, at a greater distance from nearby residences, and repositioning of outfield to point where home plate had been was a substantial change of circumstances so that granting of special exception to allow second proposal was not barred by res judicata on basis of earlier denial of special exception for softball field.

2 Cases that cite this headnote

Attorneys and Law Firms

***95** McDermott, Will & Emery and James E. McDonald and Andrew Seiden, Miami, for petitioners.

Robert Ginsburg, Co. Atty. and Eileen Ball Mehta, Asst. Co. Atty., Fine, Jacobson, ***96** Schwartz, Nash, Block & England, and Stanley B. Price, Miami, for respondents.

Before SCHWARTZ, C.J., and HUBBART and BASKIN, JJ.

Opinion

SCHWARTZ, Chief Judge.

This petition for certiorari seeks review of a circuit court affirmance of a special exception granted by the Dade County Commission for the construction of a softball field on premises operated as a private country club by the respondent Ciudamar. The primary contention is that the special exception was barred by the doctrine of administrative res judicata, as it applies to zoning cases such as this. *Wayne v. City of Green Cove Springs*, 261 So.2d 827 (Fla.1972); *Coral Reef Nurseries, Inc. v. Babcock Co.*, 410 So.2d 648, 651–654 (Fla. 3d DCA 1982), and cases cited. We do not agree.

[1] [2] Although a generally similar request had been denied two years earlier, the new proposal differed from the first in repositioning home plate—at a greater distance from nearby residences—to a point where the outfield had been located, and vice versa. The definitive decision in *Coral Reef*

 © 2025 Thomson Reuters. No claim to original U.S. Government Works.

Nurseries, Inc. v. Babcock Co., supra, 410 So.2d at 651–654, points out both that a prior zoning ruling is not binding when there has been a substantial change of circumstances and that the determination of whether such a change has in fact occurred lies primarily within the discretion of the zoning authority itself. See *City of Miami Beach v. Prevatt,* 97 So.2d 473, 477 (Fla.1957) (Res judicata "should be applied in zoning cases with great caution."). Under these rules, we may not interfere with the commission's implicit conclusion that the rearrangement of the field, which arguably reduced the noise and inconvenience to the neighboring homes, was a meaningful alteration of the proposal it had previously rejected. Closely on point is *Freeman v. Town of Ithaca Zoning Board of Appeals,* 61 A.D.2d 1070, 403 N.Y.S.2d 142 (1978), where the court, reflecting the Florida law expressed in *Babcock,* held:

> Seeking a reversal of the judgment below, petitioners principally argue here that the approved application for a clinic is identical with an earlier application which was disapproved and, consequently, the board was without power to entertain the second application. We cannot agree. It is settled law that there can be a new application and determination by a zoning board when ' * * * new plans materially change the aspects of the case * * * ' (*Matter of Reed v. Board of Standards & Appeals,* 255 N.Y. 126, 133, 174 N.E. 301, 303). Moreover, it is for the board to determine whether or not changed facts or circumstances are presented and, in so doing, it may give weight even "to slight differences which are not easily discernible" (*Ellsworth Realty Co. v. Kramer,* 268 App.Div. 824, 49 N.Y.S.2d 512). In this instance, even petitioners concede that, in the approved application, the placement of the clinic on the lot was altered by rotating the structure 90° and the location of the parking lot was changed. Accordingly, the board's determination approving the intervenors-respondents' proposal as a new application was clearly not arbitrary, and there was ample evidentiary support therefor in the record. Such being the case, the determination must be sustained (*Burlinson v. Zoning Bd. of Appeals of City of Yonkers,* 275 App.Div. 723, 87 N.Y.S.2d 412).

403 N.Y.S.2d at 143. See generally, Annot., Approval of Zoning Change—Prior Denial, 52 A.L.R.3d 494 (1973).

Accordingly, the circuit court did not depart from the essential requirements of the law in its judgment of affirmance and the petition is therefore denied. *City of Deerfield Beach v. Vaillant,* 419 So.2d 624 (Fla.1982).

Certiorari denied.

All Citations

481 So.2d 95, 11 Fla. L. Weekly 148

End of Document

© 2025 Thomson Reuters. No claim to original U.S. Government Works.

KeyCite Yellow Flag - Negative Treatment
Declined to Follow by Coleman v. East Joliet Fire Protection Dist., Ill., January 22, 2016

468 So.2d 912
Supreme Court of Florida.

TRIANON PARK CONDOMINIUM ASSOCIATION, INC., Petitioner,
v.
CITY OF HIALEAH, Respondent.

No. 63115
|
April 4, 1985.
|
Rehearing Denied May 22, 1985.

Synopsis

Condominium association filed negligence action against city for acts and omissions in inspecting and certifying construction of condominium building. The Circuit Court, Dade County, Lenore C. Nesbitt, J., entered judgment on jury verdict in favor of association, but reduced amount of recovery. Appeal and cross appeal were taken. The District Court of Appeal, 423 So.2d 911, affirmed in part, reversed in part, and remanded, and also certified question. The Supreme Court, Overton, J., held that city could not be held liable in tort to individual owners of condominiums who sustained damages caused by severe roof leakage and other building defects allegedly arising out of negligent actions of city building inspectors in enforcing provisions of building code enacted pursuant to city police powers.

District court decision quashed; certified question answered in negative.

McDonald, J., concurred and filed opinion.

Ehrlich and Shaw, JJ., dissented and filed opinions, in which Adkins, J., joined.

Procedural Posture(s): On Appeal.

West Headnotes (12)

[1] **States** Negligence in general

For there to be government tort liability, there must be either an underlying common-law or statutory duty of care with respect to alleged negligent conduct. West's F.S.A. § 768.28.

47 Cases that cite this headnote

[2] **Negligence** Standard established by statute or regulation

Legislative enactments for the benefit of the general public do not automatically create independent duty to either individual citizens or specific class of citizens. West's F.S.A. § 768.28.

7 Cases that cite this headnote

[3] **States** Negligence in general

Enactment of statute waiving sovereign immunity did not establish any new duty of care for governmental entities; sole purpose of statute was to waive that immunity which prevented recovery for breaches of existing common-law duties of care. West's F.S.A. § 768.28.

54 Cases that cite this headnote

[4] **Negligence** Protection against acts of third persons

States Nature of Act or Claim

There is not now, nor has there ever been, any common-law duty for either a private person or a governmental entity to enforce the law for the benefit of an individual; additionally, there is no common-law duty to prevent misconduct of third persons.

54 Cases that cite this headnote

[5] **Constitutional Law** Encroachment on Executive

Constitutional Law Political Questions

Judicial intervention through private tort suits into the realm of discretionary decisions relating to basic governmental functions would require judicial branch to second guess the political and police power decisions of the other branches of government and would violate separation of

 © 2025 Thomson Reuters. No claim to original U.S. Government Works.

powers doctrine. West's F.S.A. § 768.28; West's F.S.A. Const. Art. 2, § 3.

14 Cases that cite this headnote

[6] **States** Discretionary Acts or Functions

Certain discretionary functions of government are inherent in the act of governing and are immune from suit; it is the nature of the conduct, rather than status of the actor, that determines whether function is the type of discretionary function which is, by its nature, immune from tort liability. West's F.S.A. § 768.28.

25 Cases that cite this headnote

[7] **Municipal, County, and Local Government** "governmental" Powers in General

Municipal, County, and Local Government Legislative, executive, and administrative powers

Municipal, County, and Local Government Judicial Review or Intervention

Municipal, County, and Local Government Judicial review or intervention in general

States Torts and Tort Claims

There has never been common-law duty of care with regard to how legislature, commissions, boards, city councils, and executive officers should carry out functions of enacting laws or regulations or issuing licenses, permits, grants, or directives; such actions are inherent in the act of governing and judicial branch has no authority to interfere with conduct of those functions unless they violate constitutional or statutory provision. West's F.S.A. § 768.28; West's F.S.A. Const. Art. 2, § 3.

44 Cases that cite this headnote

[8] **States** Discretionary Acts or Functions

How a governmental entity, through its officials and employees, exercises its discretionary power to enforce compliance with the laws duly enacted by governmental body is matter of governance, for which there never has been a common-law duty of care. West's F.S.A. § 768.28.

40 Cases that cite this headnote

[9] **States** Particular functions or settings

Lack of common-law duty for exercising discretionary police power function must be distinguished from existing common-law duties of care applicable to same officials or employees in operation of motor vehicles or handling of firearms during course of employment to enforce compliance with the law; in such circumstances, there has always been common-law duty of care and waiver of sovereign immunity allows actions against all governmental entities for violations of those duties. West's F.S.A. § 768.28.

119 Cases that cite this headnote

[10] **States** Liability in general

There is no liability for failure of a governmental entity to build, expand, or modernize capital improvements such as buildings and roads. West's F.S.A. § 768.28.

3 Cases that cite this headnote

[11] **States** Torts and Tort Claims

Once a governmental entity builds or takes control of property or an improvement, it has same common-law duty as private person to properly maintain and operate the property, even though decision to build or modernize particular improvement in first instance is discretionary judgmental function with which courts cannot interfere. West's F.S.A. § 768.28; West's F.S.A. Const. Art. 2, § 3.

28 Cases that cite this headnote

[12] **Municipal, County, and Local Government** Injury to or Destruction of Property

City could not he held liable in tort to individual owners of condominiums who sustained damages caused by severe roof leakage

 © 2025 Thomson Reuters. No claim to original U.S. Government Works.

and other building defects allegedly arising out of negligent actions of city building inspectors in enforcing provisions of building code enacted pursuant to city police powers. West's F.S.A. §§ 553.72, 768.28.

18 Cases that cite this headnote

Attorneys and Law Firms

***914** Alan E. Tannenbaum and Alan S. Becker of Becker, Poliakoff and Streitfeld, Fort Lauderdale, for petitioner.

Chesterfield Smith, Julian Clarkson, Marty Steinberg and Andrea Simonton of Holland and Knight, Miami, for respondent.

James R. Wolf, Gen. Counsel, and Harry Morrison, Jr., Asst. Gen. Counsel, Tallahassee, amicus curiae for Florida League of Cities, Inc.

M.A. Galbraith, Jr., City Atty., Boca Raton, amicus curiae for City of Boca Raton.

Robert A. Ginsburg, County Atty., and Thomas Goldstein, Asst. County Atty., Miami, amicus curiae for Dade County.

Jack R. Rice, Jr., Miami, amicus curiae for The Dade County League Of Cities, Inc.

Opinion

OVERTON, Justice.

This is a petition to review *Trianon Park Condominium Association v. City of Hialeah,* 423 So.2d 911 (Fla. 3d DCA 1982), in which the district court held the City of Hialeah liable to condominium owners for damage to condominium units caused by severe roof leakage and other building defects on the basis that the city building inspectors were negligent in their inspections during the construction of the condominiums. The district court certified the following question:

> Whether under section 768.28, Florida Statutes (1975), as construed in *Commercial Carrier Corp. v. Indian River County,* 371 So.2d 1010 (Fla.1979), a municipality retains its sovereign immunity from a suit predicating liability solely upon the allegedly negligent inspection of a building, where that municipality played no part in the actual construction of the building.

Id. at 914–15. We have jurisdiction. Art. V, § 3(b)(4), Fla. Const.

We restate the certified question as follows:

> Whether a governmental entity may be liable in tort to individual property owners for the negligent actions of its building inspectors in enforcing provisions of a building code enacted pursuant to the police powers vested in that governmental entity.

We answer the restated question in the negative and quash the decision of the district court of appeal.

In summary, we first emphasize that section 768.28, Florida Statutes (1975), which waived sovereign immunity, created no new causes of action, but merely eliminated the immunity which prevented recovery for existing common law torts committed by the government. We hold that there has ***915** never been a common law duty to individual citizens for the enforcement of police power functions. Further, we find that no statutory duty for the benefit of individual citizens was created by the city's adoption of the building code, and, therefore, there is no tort liability on the part of the city to the condominium owners for the allegedly negligent exercise of the police power function of enforcing compliance with the building code. To hold a governmental entity liable for carrying out this type of enforcement activity would make the taxpayers of the enforcing governmental entity insurers of all building construction within the jurisdiction of the entity. We conclude that such a result was never intended by either the legislature or the city in enacting the building code provisions. Our decision, as explained below, is consistent with the decisions of the majority of states and the recent decision of the United States Supreme Court in *United States v. S.A.*

 © 2025 Thomson Reuters. No claim to original U.S. Government Works.

Empresa de Viacao Aerea Rio Grandense (Varig Airlines), 467 U.S. 797, 104 S.Ct. 2755, 81 L.Ed.2d 660 (1984).

The record reflects that Trianon Park Condominium Association, consisting of 65 unit-owners, brought suit against the developer for breach of warranty, negligence, and strict liability, and against the City of Hialeah for its negligent performance in inspecting the condominium building and certifying it for occupancy. Trianon asserted that there was improper construction of the roof membrane, flashing, and drainage system on the main roofs, and other flaws in the construction which resulted in leaks and water damage to 49 of the 65 condominium units. The action against the developer was settled and the jury returned a verdict against the city in the amount of $291,000. The award was reduced by the amount of the settlement with the developer and was limited to the maximum amount provided under section 768.28(5). On appeal, the district court affirmed and held that the enforcement of a building code "is a purely ministerial action which does not rise to the status of basic policy evaluation since the majority of the inspectors' acts involve simple measurement and enforcement of the building code as written rather than the exercise of discretion and expertise," and that "[o]nce the City undertook to inspect, review and certify construction, it was obligated to do so reasonably and responsibly in accordance with acceptable standards of care." 423 So.2d at 913. The court concluded that "the City's inspection and certification of buildings within its borders is an operational level activity, for which it may be subject to tort liability under section 768.28, Florida Statutes." *Id.*

Trianon, although it prevailed in the district court, petitioned this Court for review of the question certified by the district court of appeal. In support of the district court of appeal decision, Trianon contends that building inspections performed by a governmental entity under an adopted building code are "operational-level" activities. Trianon argues that the operational-planning analysis developed in *Evangelical United Brethren Church v. State,* 67 Wash.2d 246, 407 P.2d 440 (1965), and adopted by this Court in *Commercial Carrier Corp. v. Indian River County,* 371 So.2d 1010 (Fla.1979), is the sole means to determine liability; that we clearly stated in *Commercial Carrier* that the operational-planning test has replaced the special duty/general duty analysis contained in *Modlin v. City of Miami Beach,* 201 So.2d 70 (Fla.1967); and that the second and third elements of the *Evangelical Brethren* test have not been satisfied in this case because building inspections themselves do not change the direction or policy of the building inspection program of the city but are purely ministerial in nature. Trianon acknowledges, however, that law enforcement and fire suppression activities should not subject the city to tort liability. It distinguishes building inspections from those types of activities on the ground that the legislature has imposed broad regulatory requirements on municipalities in the area of building code enforcement under chapter 553, Florida Statutes (1979), and asserts that, unlike law enforcement or fire ***916** suppression, there are mandatory duties to be followed during building inspections.

Trianon argues that we should follow the four states that have determined that government building inspections can be a basis for governmental liability, and that we should adopt the views expressed in *Adams v. State,* 555 P.2d 235 (Alaska 1976); *Wilson v. Nepstad,* 282 N.W.2d 664 (Iowa 1979); *Stewart v. Schmieder,* 386 So.2d 1351 (La.1980); and *Coffey v. City of Milwaukee,* 74 Wis.2d 526, 247 N.W.2d 132 (1976). In addition, while acknowledging that decisions interpreting the Federal Tort Claims Act may not be applicable because of certain exemptions contained in the Act, Trianon asserts that decisions by the federal courts in *Caban v. United States,* 671 F.2d 1230 (2d Cir.1982); *Neal v. Bergland,* 646 F.2d 1178 (6th Cir.1981); *Delta Air Lines, Inc. v. United States,* 561 F.2d 381 (1st Cir.1977), *cert. denied,* 434 U.S. 1064, 98 S.Ct. 1238, 55 L.Ed.2d 764 (1978); and *Scott v. Eastern Air Lines, Inc.,* 399 F.2d 14 (3d Cir.1967), *cert. denied,* 393 U.S. 979, 89 S.Ct. 446, 21 L.Ed.2d 439 (1968), are consistent with a finding of liability for the governmental entity in making such inspections.

In response, the City of Hialeah contends that since there is no analogous cause of action against private parties for the negligent enforcement of building codes, there can be no liability for the city. The city argues that the waiver of sovereign immunity did not create any duty and that no such duty was created by either the statute establishing the building code or the common law. The city reasons that this Court, in *Commercial Carrier,* recognized that an underlying cause of action was required before a governmental entity could be held liable. It distinguishes between governmental liability for damages caused by the operation or maintenance of capital improvements owned and controlled by the government and governmental liability in those circumstances where the government is regulating activities and enforcing compliance with the law through its police power function.

The city and the other governmental entities that have appeared in this action point out that the majority of federal

 © 2025 Thomson Reuters. No claim to original U.S. Government Works.

jurisdictions which have addressed the issue have held that federal regulatory enforcement activities, such as those performed by the Environmental Protection Agency, the United States Food and Drug Administration, and the Federal Aviation Authority, do not give rise to actionable tort duties owed by the United States to individual citizens. *See Sellfors v. United States,* 697 F.2d 1362 (11th Cir.1983), *cert. denied,* 468 U.S. 1204, 104 S.Ct. 3571, 82 L.Ed.2d 870 (1984); *Raymer v. United States,* 660 F.2d 1136 (6th Cir.1981), *cert. denied,* 456 U.S. 944, 102 S.Ct. 2009, 72 L.Ed.2d 466 (1982); *Gelley v. Astra Pharmaceutical Products, Inc.,* 610 F.2d 558 (8th Cir.1979); *Zabala Clemente v. United States,* 567 F.2d 1140 (1st Cir.1977), *cert. denied,* 435 U.S. 1006, 98 S.Ct. 1876, 56 L.Ed.2d 388 (1978); *Baer v. United States,* 511 F.Supp. 94 (N.D.Ohio 1980), *aff'd,* 703 F.2d 558 (6th Cir.1982); *Carroll v. United States,* 488 F.Supp. 757 (D.Idaho 1980); *Mercer v. United States,* 460 F.Supp. 329 (S.D.Ohio 1978). The governmental entities also direct our attention to the fact that thirteen states have held that no liability may arise from building inspections. *Rich v. City of Mobile,* 410 So.2d 385 (Ala.1982); *Duran v. City of Tucson,* 20 Ariz.App. 22, 509 P.2d 1059 (1973); *Stigler v. City of Chicago,* 48 Ill.2d 20, 268 N.E.2d 26 (1971); *Grogan v. Commonwealth,* 577 S.W.2d 4 (Ky.), *cert. denied,* 444 U.S. 835, 100 S.Ct. 69, 62 L.Ed.2d 46 (1979); *E. Eyring & Sons Co. v. City of Baltimore,* 253 Md. 380, 252 A.2d 824 (1969); *Dinsky v. Town of Framingham,* 386 Mass. 801, 438 N.E.2d 51 (1982); *Stemen v. Coffman,* 92 Mich.App. 595, 285 N.W.2d 305 (1979); *Hoffert v. Owatonna Inn Towne Motel, Inc.,* 293 Minn. 220, 199 N.W.2d 158 (1972); *Fiduccia v. Summit Hill Construction Co.,* 109 N.J.Super. 249, 262 A.2d 920 (1970); *O'Connor v. City of New York,* 58 N.Y.2d 184, 460 N.Y.S.2d 485, 447 N.E.2d 33 (1983); *Shelton v. Industrial Commission,* 51 Ohio App.2d 125, 367 N.E.2d 51 (1976); *City of Denton v. Weems,* 456 S.W.2d 207 (Tex.Civ.App.1970); ***917** and *Georges v. Tudor,* 16 Wash.App. 407, 556 P.2d 564 (1976). Further, the city asserts that the decisions from the states of New York, Ohio, and Minnesota, which we cited in *Commercial Carrier,* [1] are all consistent with the view that no liability can arise from the enforcement of a building code. In addition, the city cites section 315 of the Restatement of Torts, which expresses the general common law rule that there is no duty to prevent the misconduct of a third person, [2] and section 288 of the Restatement, which relates in its commentary that legislative enactments for the protection of the interests of the community as a whole, rather than for the protection of any individual or class, create no duty or liability. [3] The city claims that Florida law has developed in a way similar to the law of Minnesota, New York, and Ohio, and notes that this Court, in *Rupp v. Bryant,* 417 So.2d 658 (Fla.1982), recently recognized the principle that before liability could be imposed a duty must first exist. Finally, the city argues that law enforcement is not the kind of activity for which the state intended to waive its immunity since it is not the type of activity engaged in by private individuals. We find persuasive the arguments of the city.

It is apparent from the decisions of the district courts of appeal that the courts and the bar are having difficulty interpreting the purpose of section 768.28 and applying the principles set forth in *Commercial Carrier.* A discussion of the evolving history of sovereign immunity, particularly as applied to municipalities, and the intent and purpose of section 768.28 is set forth in *Cauley v. City of Jacksonville,* 403 So.2d 379 (Fla.1981). In order to clarify the law regarding governmental tort liability, it is important to first set forth certain basic principles.

[1] **[2]** First, for there to be governmental tort liability, there must be either an underlying common law or statutory duty of care with respect to the alleged negligent conduct. For certain basic judgmental or discretionary governmental functions, there has never been an applicable duty of care. *Commercial Carrier.* Further, legislative enactments for the benefit of the general public do not automatically create an independent duty to either individual citizens or a specific class of citizens. *Restatement (Second) of Torts* § 288 comment b (1964).

[3] Second, it is important to recognize that the enactment of the statute waiving sovereign immunity did not establish any new duty of care for governmental entities. The statute's sole purpose was to waive that immunity which prevented recovery for breaches of existing common law duties of care. Section 768.28 provides that governmental entities "shall be liable for tort claims in the same manner and to the same extent as a private individual under like circumstances." This effectively means that the identical existing duties for private persons apply to governmental entities.

***918** **[4]** Third, there is not now, nor has there ever been, any common law duty for either a private person or a governmental entity to enforce the law for the benefit of an individual or a specific group of individuals. In addition, there is no common law duty to prevent the misconduct of third persons. *See Restatement (Second) of Torts* § 315 (1964).

 © 2025 Thomson Reuters. No claim to original U.S. Government Works.

[5] Fourth, under the constitutional doctrine of separation of powers, the judicial branch must not interfere with the discretionary functions of the legislative or executive branches of government absent a violation of constitutional or statutory rights. *See Commercial Carrier; Askew v. Schuster,* 331 So.2d 297 (Fla.1976); art. II, § 3, Fla. Const. Judicial intervention through private tort suits into the realm of discretionary decisions relating to basic governmental functions would require the judicial branch to second guess the political and police power decisions of the other branches of government and would violate the separation of powers doctrine.

[6] Fifth, certain discretionary functions of government are inherent in the act of governing and are immune from suit. *Commercial Carrier.* It is "the nature of the conduct, rather than the status of the actor," that determines whether the function is the type of discretionary function which is, by its nature, immune from tort liability. *Varig Airlines,* 104 S.Ct. at 2765.

In addition to these five basic principles, a review of our decision in *Commercial Carrier* is necessary. It is important to note at the outset that this Court's decision in *Commercial Carrier,* in rejecting the general duty/special duty dichotomy contained in *Modlin v. City of Miami Beach,* did not discuss or consider conduct for which there would have been no underlying common law duty upon which to establish tort liability in the absence of sovereign immunity. Rather, we were dealing with a narrow factual situation in which there was a clear common law duty absent sovereign immunity. We expressly recognized that there were areas of governmental activity where "orthodox tort liability stops and the act of governing begins," 371 So.2d at 1018, citing *Evangelical Brethren,* 67 Wash.2d at 253, 407 P.2d at 444, as well as the "distinct principle of law ... which makes not actionable in tort certain judgmental decisions of governmental authorities which are inherent in the act of governing." 371 So.2d at 1020. We concluded by holding that "certain 'discretionary' governmental functions remain immune from tort liability ... because certain functions of coordinate branches of government may not be subjected to scrutiny by judge or jury as to the wisdom of their performance." *Id.* at 1022. We proceeded to adopt the distinction between the planning and operational levels of decision-making set forth in *Johnson v. State,* 69 Cal.2d 782, 447 P.2d 352, 73 Cal.Rptr. 240 (1968). We also commended, for use on a case-by-case method, the test set forth in *Evangelical Brethren* which utilized the following criteria for determining the line of demarcation between discretionary and other executive or administrative processes, specifically:

> (1) Does the challenged act, omission, or decision necessarily involve a basic governmental policy, program, or objective? (2) Is the questioned act, omission, or decision essential to the realization or accomplishment of that policy, program, or objective as opposed to one which would not change the course or direction of the policy, program, or objective? (3) Does the act, omission, or decision require the exercise of basic policy evaluation, judgment, and expertise on the part of the governmental agency involved? (4) Does the governmental agency involved possess the requisite constitutional, statutory, or lawful authority and duty to do or make the challenged act, omission, or decision?

371 So.2d at 1019, quoting 67 Wash.2d at 255, 407 P.2d at 445. In applying this test to a particular set of circumstances, if all the questions can be answered in the affirmative, then the governmental conduct is discretionary and "nontortious." If one or more questions call for a negative answer, then further inquiry is necessary, ***919** depending upon the facts and circumstances involved. 67 Wash.2d at 255, 407 P.2d at 445. Our adoption of the *Evangelical Brethren* test was intended to *assist* in distinguishing between the discretionary planning or judgment phase, and the operational phase of government. In order to subject the government to tort liability for operational phase activities, there must first be either an underlying common law or statutory duty of care in the absence of sovereign immunity. In addition, although the *Evangelical Brethren* test works properly in instances where a common law or statutory duty exists, it need not be applied in situations where no common law or statutory duty of care exists for a private person because there clearly is no governmental liability under those circumstances.

To better clarify the concept of governmental tort liability, it is appropriate to place governmental functions and activities into the following four categories: (I) legislative, permitting, licensing, and executive officer functions; (II) enforcement

 © 2025 Thomson Reuters. No claim to original U.S. Government Works.

of laws and the protection of the public safety; (III) capital improvements and property control operations; and (IV) providing professional, educational, and general services for the health and welfare of the citizens.

I. *Legislative, Permitting, Licensing, and Executive Officer Functions.*

[7] Clearly, the legislature, commissions, boards, city councils, and executive officers, by their enactment of, or failure to enact, laws or regulations, or by their issuance of, or refusal to issue, licenses, permits, variances, or directives, are acting pursuant to basic governmental functions performed by the legislative or executive branches of government. The judicial branch has no authority to interfere with the conduct of those functions unless they violate a constitutional or statutory provision. There has never been a common law duty establishing a duty of care with regard to how these various governmental bodies or officials should carry out these functions. These actions are inherent in the act of governing. *See Commercial Carrier; City of Tampa v. Islands Four, Inc.*, 364 So.2d 738 (Fla. 2d DCA 1978) (refusal to renew license); *Hensley v. Seminole County*, 268 So.2d 452 (Fla. 4th DCA 1972) (vehicle inspection); *Central Advertising Co. v. City of Novi*, 91 Mich.App. 303, 283 N.W.2d 730 (1979) (enactment of zoning ordinance); *Bidinger v. City of Circleville*, 177 N.E.2d 408 (Ohio App.1961) (enactment of criminal ordinance); *J.S.K. Enterprises, Inc. v. City of Lacey*, 6 Wash.App. 433, 493 P.2d 1015 (1972) (enactment of ordinance).

II. *Enforcement of Laws and Protection of the Public Safety.*

[8] How a governmental entity, through its officials and employees, exercises its discretionary power to enforce compliance with the laws duly enacted by a governmental body is a matter of governance, for which there never has been a common law duty of care. This discretionary power to enforce compliance with the law, as well as the authority to protect the public safety, is most notably reflected in the discretionary power given to judges, prosecutors, arresting officers, and other law enforcement officials, as well as the discretionary authority given fire protection agencies to suppress fires. This same discretionary power to enforce compliance with the law is given to regulatory officials such as building inspectors, fire department inspectors, health department inspectors, elevator inspectors, hotel inspectors, environmental inspectors, and marine patrol officers. A "discretionary function exception," within which these types of activities fall, was expressly recognized in the Federal Tort Claims Act[4] and has also ***920** been recognized as inherent in the act of governing by this Court and a majority of the other jurisdictions that have addressed this issue. *See, e.g., Commercial Carrier; Morris v. County of Marin*, 18 Cal.3d 901, 559 P.2d 606, 136 Cal.Rptr. 251 (1977); *Cairl v. State*, 323 N.W.2d 20 (Minn.1982); *Swartz v. Masloff*, 62 Pa.Commw. 522, 437 A.2d 472 (1981); *Maynard v. City of Madison*, 101 Wis.2d 273, 304 N.W.2d 163 (1981). *See also* Note, *The Discretionary Exception and Municipal Tort Liability: A Reappraisal*, 52 Minn.L.Rev. 1047 (1968); Comment, *The Discretionary Function Exception to Government Tort Liability*, 61 Marq.L.Rev. 163 (1977). The necessity for this discretionary function exception was recently discussed by the United States Supreme Court in *Varig Airlines*, 104 S.Ct. at 2762–65. There have been a number of recent cases dealing with police power discretionary function activities for which no liability was found. *See Rodriguez v. City of Cape Coral*, 468 So.2d 963 (Fla.1985) (decision to take person into protective custody); *City of Daytona Beach v. Huhn*, 468 So.2d 963 (Fla.1985) (decision to make arrest); *City of Daytona Beach v. Palmer*, 469 So.2d 121 (Fla.1985) (decisions of fire-fighters in combatting fire); *Carter v. City of Stuart*, 468 So.2d 955 (Fla.1985) (enforcement of dogcatcher ordinance); *Reddish v. Smith*, 468 So.2d 927 (Fla.1985) (prisoner classification); *Duvall v. City of Cape Coral*, 468 So.2d 961 (Fla.1985) (enforcement of drunk driving statute); *Everton v. Willard*, 468 So.2d 936 (Fla.1985) (decision to make arrest); *Wong v. City of Miami*, 237 So.2d 132 (Fla.1970) (provision of police protection); *Jones v. City of Longwood*, 404 So.2d 1083 (Fla. 5th DCA 1981), *review denied*, 412 So.2d 467 (Fla.1982) (building inspection and condemnation); *Berry v. State*, 400 So.2d 80 (Fla. 4th DCA), *review denied*, 411 So.2d 380 (Fla.1981) (acts of judges, state attorneys, and parole and probation commission); *Ellmer v. City of St. Petersburg*, 378 So.2d 825 (Fla. 2d DCA 1979) (failure to provide adequate police protection); *Weston v. State*, 373 So.2d 701 (Fla. 1st DCA 1979) (state attorney action); and *Shoner v. Concord Florida, Inc.*, 307 So.2d 505 (Fla. 3d DCA), *cert. denied*, 317 So.2d 767 (Fla.1975) (enforcement of city ordinance).

[9] The lack of a common law duty for exercising a discretionary police power function must, however, be distinguished from existing common law duties of care applicable to the same officials or employees in the operation of motor vehicles or the handling of firearms during the course of their employment to enforce compliance with the law. In these latter circumstances there always has been a common law duty of care and the waiver of sovereign

 © 2025 Thomson Reuters. No claim to original U.S. Government Works.

immunity now allows actions against all governmental entities for violations of those duties of care. *See, e.g., Crawford v. Department of Military Affairs,* 412 So.2d 449 (Fla. 5th DCA), *review denied,* 419 So.2d 1196 (Fla.1982) (negligent operation of vehicle).

III. *Capital Improvement and Property Control Functions.*

[10] **[11]** As this Court has made clear in prior cases, there is no liability for the failure of a governmental entity to build, expand, or modernize capital improvements such as buildings and roads. *See Perez v. Department of Transportation,* 435 So.2d 830 (Fla.1983); *City of St. Petersburg v. Collom,* 419 So.2d 1082 (Fla.1982); *Ingham v. Department of Transportation,* 419 So.2d 1081 (Fla.1982); *Department of Transportation v. Neilson,* 419 So.2d 1071 (Fla.1982). A governmental entity's decision not to build or modernize a particular improvement is a discretionary judgmental function with which we have held the courts cannot interfere. *See Neilson* (decision to upgrade roadway). *See also Rumbough v. City of Tampa,* 403 So.2d 1139 (Fla. 2d DCA 1981) (operation of sanitary landfill); *Romine v. Metropolitan Dade County,* 401 So.2d 882 (Fla. 3d DCA 1981), *review denied,* 412 So.2d 469 (Fla.1982) (traffic control decisions). On the other ***921** hand, once a governmental entity builds or takes control of property or an improvement, it has the same common law duty as a private person to properly maintain and operate the property. *See Commercial Carrier* (maintenance of traffic control devices); *Department of Transportation v. Webb,* 438 So.2d 780 (Fla.1983) (maintenance of railroad crossing); *Hodges v. City of Winter Park,* 433 So.2d 1257 (Fla. 5th DCA 1983), *review denied,* 444 So.2d 416 (Fla.1984) (maintenance of road); *Town of Belleair v. Taylor,* 425 So.2d 669 (Fla. 2d DCA 1983) (maintenance of foliage on median); *City of Tallahassee v. Elliott,* 326 So.2d 256 (Fla. 1st DCA 1975), *cert. denied,* 344 So.2d 324 (Fla.1977) (maintenance of drainage system).

IV. *Providing Professional, Educational, and General Services.*

Providing professional, educational, and general services for the health and welfare of citizens is distinguishable from the discretionary power to enforce compliance with laws passed under the police power of this state. These service activities, such as medical and educational services, are performed by private persons as well as governmental entities, and common law duties of care clearly exist. Whether there are sufficient doctors provided to a state medical facility may be a discretionary judgmental decision for which the governmental entity would not be subject to tort liability. Malpractice in the rendering of specific medical services, however, would clearly breach existing common law duties and would render the governmental entity liable in tort. A discussion of immunity for the government and its employees is contained in our recent decision in *Rupp v. Bryant,* 417 So.2d 658 (Fla.1982) (supervision of public school students held not to be a discretionary function).

In considering governmental tort liability under these four categories, we find that there is no governmental tort liability for the action or inaction of governmental officials or employees in carrying out the discretionary governmental functions described in categories I and II because there has never been a common law duty of care with respect to these legislative, executive, and police power functions, and the statutory waiver of sovereign immunity did not create a new duty of care. On the other hand, there may be substantial governmental liability under categories III and IV. This result follows because there is a common law duty of care regarding how property is maintained and operated and how professional and general services are performed. It is in these latter two categories that the *Evangelical Brethren* test is most appropriately utilized to determine what conduct constitutes a discretionary planning or judgmental function and what conduct is operational for which the governmental entity may be liable. Prior to the enactment of section 768.28, sovereign immunity for all governmental entities, including the state and all of its agencies and subdivisions, remained in full force except for the proprietary and special duty exceptions carved out by this Court. Section 768.28 waived governmental immunity for most government activities where there had been an underlying common law duty of care. The waiver was intended to be broad in its coverage, but clearly was not intended to create causes of action for activities that are inherently governmental in nature.

The Instant Case:

[12] In the instant case, Trianon attempts to establish liability based upon an alleged general duty to enforce the building code. It contends that the legislature, by enacting chapter 553, established a statutory duty on the part of governmental entities to inspect construction projects for the protection of individual citizens as well as the general public. Trianon asserts that this duty to inspect was intended by the legislature to benefit and protect individual property owners. Further, Trianon emphatically contends that the issue presented involves the right of the public to the enforcement

 © 2025 Thomson Reuters. No claim to original U.S. Government Works.

of minimum standards affecting health and safety and the general protection of human life and property. The time has come, argues Trianon, for the judicial branch to make sure the public ***922** receives the minimum protection that the legislature has mandated it receive from governmental entities. Trianon asserts that this protection will be realized only when the counties and municipalities are held financially accountable for the negligent enforcement of building codes. We reject the contention that there was any such legislative intent to establish this individual right for property owners and the assertion that the judiciary should interfere with how another branch of government chooses to enforce the law.

Nothing contained in chapter 553 evinces an intent to give individual citizens a statutory right of recovery for the government's negligent inspection of their property. The act itself states that its purpose and intent is to "allow reasonable protection for public safety, health, and general welfare for *all* the people of Florida at the most reasonable cost to the consumer." Section 553.72, Fla.Stat. (1983) (emphasis added). This law is no different than other acts of the legislature which seek to protect by regulation the welfare of society. To give effect to Trianon's position would make the taxpayers of each governmental entity liable to individual property owners for the failure of governmental inspectors to use due care in enforcing the construction requirements of the building code. It would make the governmental entity and its taxpayers insurers for all building construction defects. If we approved this principle for building inspections, we would also necessarily have to find governmental entities and their taxpayers fiscally responsible for the failure to use due care in carrying out their power to enforce compliance with laws regarding fire department inspections, elevator inspections, hotel and restaurant inspections, water and sewer plant inspections, swimming pool inspections, and multiple other governmental inspection programs designed to protect the public. We choose instead to join the majority of jurisdictions in rejecting governmental liability in these types of situations.

We find that the enactment of a statute giving a governmental entity the power to enforce compliance with the law does not, in and of itself, give individuals a new right of action that previously never existed. There is no question that the legislature has the power to create such a cause of action, but we find no such intent in the particular act which provided for the establishment of building codes in this state. We find no indication that chapter 553 was intended as a means to guarantee the quality of buildings for individual property owners or developers. We find that the enforcement of building codes and ordinances is for the purpose of protecting the health and safety of the public, not the personal or property interests of individual citizens. The discretionary power to enforce compliance with the building code flows from the police power of the state. In that regard, this power is no different from the discretionary power exercised by the police officer on the street in enforcing a criminal statute, the discretionary power exercised by a prosecutor in deciding whether to prosecute, or the discretionary power exercised by a judge in making the determination as to whether to incarcerate a defendant or place him on probation. Statutes and regulations enacted under the police power to protect the public and enhance the public safety do not create duties owed by the government to citizens as individuals without the specific legislative intent to do so. The enforcement of statutes or regulations is clearly distinguishable from the legal responsibilities owed by the government as the owner and operator of buildings, roadways, or other facilities under its control and its responsibilities in providing general or professional services. As previously mentioned, in the latter instances the government has the same duty as that imposed upon private citizens.

Governments must be able to enact and enforce laws without creating new duties of care and corresponding tort liabilities that would, in effect, make the governments and their taxpayers virtual insurers of the activities regulated. To hold otherwise would result in a substantial fiscal impact on governmental entities which was never intended by the legislature. Such a ***923** holding would inevitably restrict the development of new programs, projects, and policies and would decrease governmental regulation intended to protect the public and enhance the public welfare. Further, such a holding would represent an unconstitutional intrusion by the judiciary into the discretionary judgmental functions of both the legislative and executive branches of government.

The government clearly has no responsibility to protect personal property interests or ensure the quality of buildings that individuals erect or purchase. The proper remedy for faulty construction lies in an action against the contractor, developer, or seller.

We caution trial and appellate courts who apply this decision that our holding does not have the broad ramifications characterized by the dissents, nor does it recede from *Commercial Carrier.* This decision addresses only the narrow issue of exercising basic discretionary judgment in the

 © 2025 Thomson Reuters. No claim to original U.S. Government Works.

enforcement of the police power, public safety functions by a state, county, or municipal governmental entity.

For the reasons expressed, the certified question, as restated, is answered in the negative and the decision of the district court is quashed.

It is so ordered.

BOYD, C.J., and ALDERMAN and McDONALD, JJ., concur.

McDONALD, J., concurs with an opinion.

EHRLICH, J., dissents with an opinion, in which ADKINS, J., concurs.

SHAW, J., dissents with an opinion, in which ADKINS, J., concurs.

McDONALD, Justice, concurring.
To rule differently from what we do in this case would expect too much from government; it would likely lend to government's cessation of building inspections. Government should not have to pay for the wrongs caused by others because they fail to discover or prevent them through its failure to enforce statutes, ordinances, rules or regulations. I don't think the legislature either intended or envisioned governmental liability in such circumstances when it enacted the waiver of sovereign immunity statute. It is quite another thing when the government's activity directly causes an injury. Liability may attach in such circumstances and I would have no hesitancy in saying so.

EHRLICH, Justice, dissenting.
I dissent.

The majority today has further eroded the legislature's unequivocal waiver of sovereign immunity and further reduced the rights of citizens of this state to be recompensed for injury caused by negligent performance of statutorily mandated duties.

Before this Court's decision in *Hargrove v. Town of Cocoa Beach,* 96 So.2d 130 (Fla.1957), municipalities could not be sued for damages arising out of the negligent performance of governmental acts, but were liable just as ordinary citizens for the negligent acts of their employees arising out of their proprietary functions, such as the provision of municipal utilities. In *Hargrove,* this Court for the first time recognized the anachronism of sovereign immunity, particularly as applied to municipalities, and held that a municipality was liable for the negligence of its employees in its police department on the theory of respondeat superior. In *Modlin v. City of Miami Beach,* this Court, in effect, receded from the broad, sweeping changes ushered in by *Hargrove* and held that a municipal employee, and hence the municipality, was not liable in damages to someone who was injured as a result of his negligent conduct unless there was a one-on-one relationship between the municipal employee and the injured party, i.e. where a municipality "undertook the manual operation of a railroad crossing signal toward a motorist attempting to negotiate that crossing," *id.* at 76, or "plac[ed] on police officers a duty not to deprive those with whom they come in contact of their constitutional rights of privacy, integrity of person, and so forth." *Id.* The law was thus clear that where there ***924** was that one-on-one relationship that both the negligent municipal employee and the municipality were jointly and severally liable to the injured person.

The law remained thus until the legislature enacted section 768.28 in 1973, purporting to waive sovereign immunity of all governmental bodies except under stated circumstances, but at the same time immunizing the negligent employee from all liability.[1] In *Commercial Carrier,* this Court construed that statute for the first time. In that case the governmental unit was claimed to be negligent in the maintenance of the traffic light at an intersection and negligent in failing to maintain a stop sign at an intersection and negligent in failing to paint the word "stop" at an intersection. The trial courts and the district court of appeal held that no causes of action were stated. According to this Court, the rationale for the district court of appeal's holding was "that no cause of action existed for the alleged wrong and, therefore, section 768.28 had no applicability *because it was not intended to create a cause of action where none existed in common law prior to its enactment.*" 371 So.2d at 1014 (emphasis supplied). In quashing the opinion of the district courts, this Court said, "Consequently, we concluded that *Modlin* and its ancestry and progeny have no continuing vitality subsequent to the effective date of 768.28." *Id.* at 1016. In *Commercial Carrier,* the respondent argued "that since private individuals do not perform government functions, there is no waiver where any governmental function is involved." *Id.* This argument was summarily rejected by this Court. This aspect of the Court's holding was perhaps best highlighted by the dissenting

 © 2025 Thomson Reuters. No claim to original U.S. Government Works.

opinion of Justice Overton when he said, "Common sense dictates that the maintenance of thousands of miles of public roadways is not the kind of activity which private individuals engage in, but is uniquely governmental in nature."[2] *Id.* at 1023. The Court did however read into 768.28 the concept that "certain 'discretionary' governmental functions remain immune from tort liability. This is so because certain functions of coordinate branches of government may not be subjected to scrutiny by judge or jury as to the wisdom of their performance." *Id.* at 1022. Thus the distinction between "planning" and "operational" levels of decision-making by governmental agencies was adopted; planning-level decisions were immune and operational decisions were not immune.

Today the majority embraces the very analysis explicitly quashed in *Commercial Carrier.* The majority focuses on whether, at common law, a duty existed running from a governmental agency to a member of the public. In so doing the majority begs the question and reinstates the old governmental-proprietarial distinction the legislature clearly intended to abolish in waiving sovereign immunity.

At common law, the sovereign was immune from suit, thus the question of whether or not duty existed was moot, and never litigated. The waiver of sovereign immunity rang in a new era in which that issue is of utmost importance. To answer the question by reference to pre-waiver common law in effect repeals the statute and usurps legislative function.

***925** It is well settled at common law that a statute creates a duty running from one whose behavior is the subject of the statute to an individual if that individual is in the class designed to be protected by the statute and the injury suffered is the harm the statute is intended to prevent. All private citizens are liable for breaches of statutorily imposed duties. A governmental agency, through its employees, then, should be liable for breaches of statutorily imposed duties under precisely the same analysis.

The majority recognizes that to subject the government to tort liability for operational phase negligence, there must be either an underlying common law or a statutory duty of care in the absence of sovereign immunity. The statute in the case at hand clearly mandated that no building permit be issued and that no certificate of occupancy be issued unless the statutory code was complied with. This is the statutory duty, the breach of which gives rise to the cause of action being asserted against the governmental entity.

The city adopted a building code. Whether it should adopt a building code, and if so what the code should contain, is a planning-level decision and the city has immunity in this area. The code prohibits the construction of a building until and unless a building permit is obtained, and in order to get one, the builder has to establish that the building plans conform to the code. The city employee who makes this determination of compliance or its absence is not making policy. That has already been done with the adoption of the code. This is a classic operational-level decision—to determine whether the plans comply with the code. If so, the permit must be issued. If not, a permit must not be issued. No discretion is vested in the employee. The code also requires on-site inspections to be performed to insure the building is being constructed in accordance with the plans. Here again the city inspector is not making policy. He is simply performing a ministerial task, another classic operational-level decision. If the construction is in accordance with the plans, a certificate of occupancy has to be issued. To issue one when construction is not in accordance with the plans is a violation of the code. The inspector's duty is prescribed by law. He has no discretion to breach that duty.

The majority says that to hold a governmental entity liable for making certain that the building code is carried out makes the governmental entity *insurors* of all building construction within the jurisdiction of the entity. Nothing could be further from the truth. An insuror is a guarantor and is liable without fault. Here the injured party must still prove negligence and proximate cause.

The statute is relatively simple. If a private person would be liable to the injured party in accordance with the general laws of the state, then the governmental entity is liable. If an architect is negligent in his supervision of construction of a building and such negligence is the proximate cause of another's injury or damage, he is clearly liable, whether there be privity or not. If the manufacturer of a building elevator is negligent in its inspection of the elevator and someone is injured or damaged thereby, he is clearly liable. In my opinion, the legislature intended to impose liability on a government entity for comparable negligent conduct by an inspector employed by a governmental entity.

It cannot be argued that the purchasers of these substandard condominium units were not within the class sought to be protected. While certification of housing as complying with a minimum building code does redound to the general good, its particular effect is to ensure that those who inhabit

 © 2025 Thomson Reuters. No claim to original U.S. Government Works.

such housing are protected from the irresponsibility and carelessness of builder/entrepreneurs whose goal to maximize profits would, as here, minimize habitability. The harm, defective housing which threatens the health and welfare of its occupants, is as obviously that which the statute was designed to prevent.

The majority says "Finally, the city argues that law enforcement is not the kind of activity for which the state intended to waive its immunity since it is not the type ***926** of activity engaged in by private individuals. We find persuasive the arguments of the city." This is precisely the argument urged in *Commercial Carrier* and finally rejected by this Court. As I see it, the majority is clearly receding from *Commercial Carrier* and adopting the *Modlin* doctrine and the old governmental/proprietary test. Only those actions which are commonly performed by private individuals will henceforth give rise to suits against the state. I believe we open ourselves to charges of judicial legislation when, six years after construing a statute based on legislative intent, this Court reverses its reading of that statute in spite of the fact that the legislature has given no indication that the original construction was erroneous.

I would answer the certified question in the affirmative and approve the decision of the district court.

ADKINS, J., concurs.

SHAW, Justice, dissenting.

The district court was correct in holding that building inspections are operational level activities under *Commercial Carrier Corp. v. Indian River County,* 371 So.2d 1010 (Fla.1979). If we were to answer the certified question as it was presented, *Commercial Carrier* would dictate a negative answer. The majority opinion recasts the question into one involving traditional tort principles which I paraphrase as, "Does a government entity have a duty to individual property owners under traditional tort law to enforce building code ordinances?" The majority then answers its own question by holding that the county is sovereignly immune because there is no duty. However, just as a waiver of sovereign immunity does not create a duty, an absence of duty does not create sovereign immunity.

The majority opinion commingles the separate issues of sovereign immunity and duty under traditional tort law. If a government entity is sovereignly immune from suit because of the separation of powers doctrine, there is no jurisdiction over the person (party) and the courts may not hear or address the merits of the case. Thus, any discussion of duty can only mean one of two things: the city is not sovereignly immune from suit and the courts have jurisdiction to decide the case on the merits using traditional tort principles; or, the city is immune and the court's analysis of the merits is dicta. I maintain, of course, that it is the former: government entities are not sovereignly immune from suit on discretionary, planning or police power activities. They may or may not be liable on the merits, but they are not immune.

The majority rejects the argument that the city's general duty to inspect under the building code created a special or actionable duty to individual citizens who suffer injury from the city's negligence in performing building inspections. Careful readers will recognize, absent the labeling, the substance of the *Modlin* doctrine [1] which we condemned in Commercial Carrier. Whatever label may be placed on it, the doctrine is routinely used in both private and governmental tort law because duty is a fundamental element in proving actionable negligence.

In *Modlin,* the complaint against the city alleged negligent performance of an inspection of construction in progress with the resulting failure to discover the defect that eventually caused the collapse of a mezzanine which killed plaintiff/petitioner's wife. In the first part of our opinion we analyzed the issue of sovereign immunity. The actual analysis is now irrelevant because it was based on a theory of municipal sovereign immunity which has been superseded by the enactment of section 768.28, Florida Statutes (1973), abolishing the distinctions between municipal and state sovereign immunity. *See Commercial Carrier,* 371 So.2d at 1016. Nevertheless, our conclusion is pertinent: "it follows that if the respondent city is to escape liability, it will have to be other than by the path of municipal ***927** tort immunity." *Modlin,* 201 So.2d at 74. In other words, there was no sovereign immunity from suit but it still had to be determined whether there was liability under traditional tort principles.

> It is a well recognized principle of tort law that a fundamental element of actionable negligence is the existence of a duty owed by the person charged with negligence to the person injured. However, there is also a doctrine of

 © 2025 Thomson Reuters. No claim to original U.S. Government Works.

> respectable lineage and compelling logic that holds that this duty must be something more than the duty that a public officer owes to the public generally.

Id. at 75 (citations omitted). The second quoted sentence is the *Modlin* doctrine which can be restated as, "A general duty to all does not, *without more,* establish a special (actionable) duty to a particular person." Governments have a general duty to all to preserve the peace by enforcing the law and regulating anti-social behavior. If violation of this general duty constituted actionable negligence, the government would be potentially liable in every tort suit between private individuals. The situation would be the same as that which existed in early English law before the courts began to differentiate between absolute standards of conduct owed to the world at large and legally recognizable standards owed to particular persons. *See generally,* Prosser and Keeton, *The Law of Torts* § 53 (5th ed. 1984).[2] Violation of the general duty to do unto others as you would have them do unto you, without more, is not actionable negligence in a secular court of law. Thus, private tort law and the *Modlin* doctrine are congruent.

In *Commercial Carrier,* we addressed the general duty—special duty dichotomy of the *Modlin* doctrine. We stated the doctrine as, "no cause of action exists for ... the state or its political subdivisions where the duty breached is said to be owed to the public at large but not to any particular person." *Commercial Carrier,* 371 So.2d at 1015. This statement highlights the first prong of the doctrine that a general duty does not create a special duty but obscures the equally important prong that the presence of a general duty does not preclude the presence of a special duty. Plaintiffs must be given the opportunity to present the "more" which may establish a special duty.[3] We concluded:

> Regardless, it is clear that the *Modlin* doctrine is a function of municipal sovereign immunity and not a traditional negligence concept which has meaning apart from the governmental setting. Accordingly, its efficacy is dependent on the continuing vitality of the doctrine of sovereign immunity. If this be so, does the *Modlin* doctrine survive notwithstanding the enactment of section 768.28? We think not.

Id. It is clear to me that the *Modlin* doctrine did survive the waiver of sovereign immunity. The doctrine is grounded on the traditional tort principle of duty, not sovereign immunity, as the *Modlin* court itself recognized. The legislature, in section 768.28, waived sovereign immunity, not the traditional principle that duty is an essential element of actionable negligence. Section 768.28 not only did not abolish the doctrine, it affirmatively adopted the substance of the doctrine by providing that the government would be liable only "if a private person, would be liable to the claimant, in accordance with the general laws of this state[.]" Section 768.28(1).

Turning to the case at hand, I agree with that portion of Justice Ehrlich's dissent ***928** wherein he concludes that the government's assumption of the responsibility to inspect and certify buildings in accordance with the building code created a duty toward the purchasers of the certified buildings.[4] To my mind, this is the type of special duty which the *Modlin* doctrine recognizes as actionable.

I more fully discuss my disagreement with the Court's approach to sovereign immunity issues in my dissents in *Everton v. Willard,* 468 So.2d 936 (Fla.1985), *Carter v. City of Stuart,* 468 So.2d 955 (Fla.1985), *Reddish v. Smith,* 468 So.2d 929 (Fla.1985), and *Duvall v. City of Cape Coral,* 468 So.2d 961 (Fla.1985). I add only that the four new categories of government functions and activities which the majority creates here can only add confusion to an already confused area of the law. The four categories are: (I) legislative, permitting, licensing, and executive officer functions; (II) enforcement of laws and the protection of the public safety; (III) capital improvements and property control operations; and (IV) providing professional, educational, and general services for the health and welfare of the citizens. The majority concludes there is no common law duty of care with respect to categories I and II and the statutory waiver of sovereign immunity did not create a new duty of care but that there is a common law duty of care with respect to categories III and IV. *See* majority op. at 919 – 921. If the state cannot be liable in the first two categories because of an absence of common law duty, but may be liable in the last two categories because of the presence of a

 © 2025 Thomson Reuters. No claim to original U.S. Government Works.

common law duty, then it logically follows that there is no sovereign immunity for any of the four categories. Duty or lack of duty appears to be the distinguishing feature. This raises the question of whether *Commercial Carrier* and its progeny survive. Are the first two categories exclusively discretionary and planning level activities and the last two categories exclusively nondiscretionary and operational level activities? Obviously not. Is *Commercial Carrier* grounded on the separation of powers doctrine and sovereign immunity or has the majority abandoned it and transferred the question to one of traditional tort law duty? So far as I can tell, the categories are simply added on to the *Evangelical Brethren,* [5] discretionary, operational, planning, and police power tests. I note that all four categories are exercises of the police power, that all four are discretionary, that all four might be either operational or planning, and that the separation of powers doctrine is used as the test in all four for determining whether there exists a common law duty on the part of government to its tort victims. We have truly created a formidable mountain of tests and case law under which the government is sovereignly immune and/or nonliable in all but the rarest of cases. Despite the constitutional and statutory provisions which unequivocally waive sovereign immunity, the majority insists this is not so. I respectfully dissent.

ADKINS, J., concurs.

All Citations

468 So.2d 912, 53 USLW 2522, 10 Fla. L. Weekly 210

Footnotes

1 *Weiss v. Fote,* 7 N.Y.2d 579, 200 N.Y.S.2d 409, 167 N.E.2d 63 (1960); *Harris v. State,* 48 Ohio Misc. 27, 358 N.E.2d 639 (1976); *Silver v. City of Minneapolis,* 284 Minn. 266, 170 N.W.2d 206 (1969).

2 The section reads as follows:

> § 315. General Principle
>
> There is no duty so to control the conduct of a third person as to prevent him from causing physical harm to another unless (a) a special relation exists between the actor and the third person which imposes a duty upon the actor to control the third person's conduct, or (b) a special relation exists between the actor and the other which gives to the other a right to protection.

Restatement (Second) of Torts § 315 (1964).

3 The comment on clause (a) of section 288 reads as follows:

> *b.* Many legislative enactments and regulations are intended only for the protection of the interests of the community as such, or of the public at large, rather than for the protection of any individual or class of persons. Such provisions create an obligation only to the state, or to some subdivision of the state, such as a municipal corporation. The standard of conduct required by such legislation or regulation will therefore not be adopted by the court as the standard of a reasonable man in a negligence action brought by the individual.

Restatement (Second) of Torts § 288 comment b (1964).

4 The exceptions from tort liability under the Federal Tort Claims Act are listed in 28 U.S.C. § 2680 (1982). Subsection (a) provides:

> Any claim based upon an act or omission of an employee of the Government, exercising due care, in the execution of a statute or regulation, whether or not such statute or regulation be valid, or based upon the

 © 2025 Thomson Reuters. No claim to original U.S. Government Works.

exercise or performance or the failure to exercise or perform a discretionary function or duty on the part of a federal agency or an employee of the Government, whether or not the discretion involved be abused.

1 I query whether, having now cloaked the governmental entity with sovereign immunity, the Court has not now called into question the constitutionality of section 768.28(9) which prevents suits against officers, employees or agents of the state. Such suits were available, at common law. *See, e.g.,* F. Mechem, A Treatise on The Law of Public Offices and Officers, Chapter VI—*Of the Liability of Ministerial Officers to Private Action* — (1890). The combined effect of the statute and today's holding may well be a violation of article I, section 21, Florida Constitution.

2 The majority mischaracterizes *Commercial Carrier* when it says that the Court was "dealing with a narrow factual situation in which there was a clear common law duty absent sovereign immunity." Significantly, the majority fails to cite a single case which holds that there was a common law duty on a government entity to put up and maintain traffic control devices. There are none because there could be no suits because of sovereign immunity.

1 *Modlin v. City of Miami Beach,* 201 So.2d 70 (Fla.1967).

2 Prosser describes the effect of the absolute standard of conduct thusly, "[t]he defendant's obligation to behave properly apparently was owed to all the world, and he was liable to any person whom he might injure by his misconduct." *Prosser* at 357.

3 See cases cited in *Modlin* for the proposition that the presence of a general duty does not preclude a finding of liability based on a concurrent special duty. *First National Bank of Key West v. Filer,* 107 Fla. 526, 145 So. 204 (1933); *Thompson v. City of Jacksonville,* 130 So.2d 105 (Fla. 1st DCA 1961); *Hewitt v. Venable,* 109 So.2d 185 (Fla. 3d DCA 1959); et al. See also *Irwin v. Town of Ware,* 392 Mass. 745, 467 N.E.2d 1292 (1984), for a cogent examination of the substance of the doctrine as applied in Massachusetts.

4 I differ from him in two basic respects. First, I am persuaded that the legislative waiver of sovereign immunity is comprehensive: neither operational nor planning functions are immune from suit. Government entities are subject to suit on planning level functions just as private persons are. The separation of powers doctrine can only bar suit on nonjusticiable political questions. To hold otherwise is to frustrate the constitutional and statutory provisions waiving sovereign immunity. Second, the operational/planning test is a failed instrument as demonstrated by the progeny of *Commercial Carrier*. The simple truth is that planning alone will very rarely if ever injure anyone and for that reason is extremely unlikely to become the subject of a tort suit. However, when the planning becomes operational, it is properly the subject of a suit if the elements of a tort can be proven. The attempts to distinguish between planning and operational functions is an elaborate but irrelevant artifact when the legislature has completely waived sovereign immunity. If a governmental entity "plans" a tort *and* carries it out, thus injuring someone, the entity should be subject to suit just as a private person would be under the same circumstances.

5 *Evangelical United Brethren Church v. State,* 67 Wash.2d 246, 407 P.2d 440 (1965).

End of Document

© 2025 Thomson Reuters. No claim to original U.S. Government Works.

5 So.3d 26
District Court of Appeal of Florida, Fourth District.

DELRAY MEDICAL CENTER, INC., d/b/a Delray Medical Center, Appellant,
v.
STATE of Florida AGENCY FOR HEALTH CARE ADMINISTRATION, Bethesda Health Care System, Inc., d/b/a West Boynton Community Hospital, Wellington Regional Medical Center, Inc., d/b/a Wellington Regional Medical Center and JFK Medical Center Limited Partnership d/b/a JFK Medical Center, Appellees.

No. 4D07–3489
|
Jan. 28, 2009.
|
Rehearing Denied April 21, 2009.

Synopsis

Background: Hospitals appealed a decision of the Agency for Health Care Administration granting the operator of a different hospital a certificate of need to transfer beds to a new satellite hospital.

Holdings: The District Court of Appeal held that:

[1] denial of operator's first application for a certificate of need did not require denial of operator's second application, and

[2] competent and substantial evidence of substantial changes in material circumstances supported grant of the second application.

Affirmed.

West Headnotes (8)

[1] **Res Judicata** Res Judicata

Res Judicata Matters Actually Litigated or Determined

Res Judicata Matters Which Could Have Been Litigated or Determined

Outside the field of administrative law, res judicata means that a judgment on the merits rendered in a former suit between the same parties or their privies, upon the same cause of action, by a court of competent jurisdiction, is conclusive not only as to every matter which was offered and received to sustain or defeat the claim, but as to every other matter which might with propriety have been litigated and determined in that action.

1 Case that cites this headnote

[2] **Administrative Law and Procedure** Administrative Powers and Proceedings

Unlike the typical court case decided on relatively fixed principles of law for the principal purpose of settling the rights of the parties, the actions of administrative agencies are usually concerned with deciding issues according to a public interest that often changes with shifting circumstances and passage of time.

[3] **Administrative Law and Procedure** Res judicata or claim preclusion

In the field of administrative law, the counterpart to res judicata is administrative finality.

4 Cases that cite this headnote

[4] **Administrative Law and Procedure** Conclusiveness

Florida courts do not apply the doctrine of administrative finality when there has been a significant change of circumstances or there is a demonstrated public interest.

7 Cases that cite this headnote

[5] **Administrative Law and Procedure** Conclusiveness

The determination of whether a significant change in circumstances has occurred, so as to

 © 2025 Thomson Reuters. No claim to original U.S. Government Works.

warrant reconsideration of a previously decided matter rather than application of the doctrine of administrative finality, lies primarily within the discretion of the administrative agency.

6 Cases that cite this headnote

[6] **Health** Need, public necessity

Denial of hospital operator's first application for a certificate of need for the transfer of beds to a new satellite hospital did not require, pursuant to the doctrine of administrative finality, the denial of operator's second application for a certificate of need; operator was entitled to present new facts or demonstrate changed conditions warranting different treatment of the second application.

[7] **Administrative Law and Procedure** Hearing

Florida favors administrative hearings to develop and flesh out the differences between successive administrative applications.

[8] **Health** Evidence

Competent and substantial evidence of substantial changes in material circumstances between hospital operator's first application for a certificate of need for the transfer of beds to a new satellite hospital, which was denied, and operator's second application for a certificate of need supported grant of the second application; administrative rule governing determinations of need was repealed, population projections, traffic congestion, and the need to accommodate "observation" patients increased, and hurricanes had exposed the vulnerability of the local health care system in responding to the medical needs of the population. West's F.S.A. § 408.035; Fla.Admin.Code Ann. r. 59C–1.008(2)(e).

Attorneys and Law Firms

*27 C. Gary Williams, John R. Beranek, and E. Dylan Rivers of Ausley & McMullen, Tallahassee, for Delray Medical Center, Inc., d/b/a Delray Medical Center.

Robert D. Newell, Jr., and David R. Terry of Newell, Terry & Douglas, P.A., Tallahassee, for Wellington Regional Medical Center, Inc., d/b/a Wellington Regional Medical Center.

*28 Justin M. Senior, Chief Appellate Counsel, and Tracy Lee Cooper, Assistant General Counsel, Tallahassee, for State of Florida, Agency for Health Care Administration.

Marjorie Gadarian Graham of Marjorie Gadarian Graham, P.A., Palm Beach Gardens, Robert A. Weiss and Karen A. Putnal of Parker, Hudson, Rainer & Dobbs, LLP, Tallahassee, and Jonathan L. Rue of Parker, Hudson, Rainer & Dobbs, LLP, Atlanta, GA, for Bethesda Health Care System, Inc., d/b/a West Boynton Community Hospital.

Opinion

PER CURIAM.

Delray Medical Center, Wellington Regional Medical Center, and JFK Medical Center appeal the Agency for Health Care Administration's grant of a Certificate of Need ("CON") application to appellee, Bethesda Healthcare System, Inc., to establish a new satellite hospital, West Boynton Community Hospital. [1] We affirm and write to discuss appellants' claim that Bethesda's CON application was barred by the doctrine of res judicata.

Bethesda is a non-profit corporation operating a local healthcare system in the "Boynton Area" of South Palm Beach County. The Bethesda System includes Bethesda Memorial Hospital, Bethesda Health City, Inc., Bethesda Hospital Foundation, Inc., and other affiliated entities. Bethesda Memorial Hospital is a 390–bed general acute care hospital located in Boynton Beach.

In 2003, Bethesda filed CON Application No. 9659 and JFK filed CON Application No. 9660 seeking approval to establish a satellite hospital in the West Boynton area. Bethesda's CON Application sought to move 80–beds from its existing hospital to a satellite hospital in West Boynton, located within the same subdistrict. *See Bethesda Healthcare Sys., Inc. v. Agency for Health Care Admin.*, 945 So.2d 574 (Fla. 4th DCA 2006) (*Bethesda I*). JFK's CON Application sought to transfer beds

 © 2025 Thomson Reuters. No claim to original U.S. Government Works.

from its facility in subdistrict 9–4 to subdistrict 9–5 in West Boynton. *Id.*

In June 2003, the Agency issued a preliminary approval of Bethesda's application, but denied JFK's application. After an administrative hearing, an administrative law judge issued a recommended order denying both the Bethesda and JFK CON applications. A final order denying both applications was issued by the Agency on March 7, 2005. This court affirmed the final order. *See Bethesda I,* 945 So.2d at 574.

On March 16, 2005, during the first "hospital beds and facilities" batching cycle of 2005, Bethesda filed CON Application No. 9838 (*Bethesda II*). On June 17, 2005, the Agency issued a preliminary approval of the application. Delray, Wellington, and JFK challenged this preliminary approval and the three challenges were consolidated before the same administrative law judge. Thereafter, Delray filed a motion for summary recommended order denying Bethesda's CON application which the judge denied. After a seven-week administrative hearing involving 350 exhibits and 74 witnesses, the judge issued a recommended order recommending approval of *Bethesda II,* making 622 specific findings of fact and drawing 32 conclusions of law. The Agency entered a final order adopting the recommended order, finding that competent substantial evidence supported the administrative judge's findings of fact and conclusions of law. Delray, Wellington, and JFK appeal this final order.

*29 **[1]** Appellants primarily contend that the second CON application was barred by res judicata or administrative finality. Outside the field of administrative law, res judicata means that

> [a] judgment on the merits rendered in a former suit between the same parties or their privies, upon the same cause of action, by a court of competent jurisdiction, is conclusive not only as to every matter which was offered and received to sustain or defeat the claim, but as to every other matter which might with propriety have been litigated and determined in that action.

Tyson v. Viacom, Inc., 890 So.2d 1205, 1209 (Fla. 4th DCA 2005) (quoting *Kimbrell v. Paige,* 448 So.2d 1009, 1012 (Fla.1984) (quoting *Wade v. Clower,* 94 Fla. 817, 114 So. 548 (1927))).

[2] The Florida Supreme Court has recognized that the legal principles of res judicata do not "neatly fit within the scope of administrative proceedings," so that the doctrine is applied there with "great caution." *Thomson v. Dep't of Envtl. Regulation,* 511 So.2d 989, 991 (Fla.1987). As the supreme court observed in *Thomson,*

> [c]ourts normally apply law to past facts which remain static-where res judicata operates at its best —but agencies often work with fluid facts and shifting policies. The regularized procedure of courts conduces to application of res judicata; administrative procedures are often summary, parties are sometimes unrepresented by counsel, and permitting a second consideration of the same question may frequently be supported by other similar reasons which are inapplicable to judicial proceedings. The finality of unappealed judgments of courts is ordinarily well understood in advance, whereas statutory provisions often implicitly deny finality or fail to make clear whether or when administrative action should be considered binding.

Id. (quoting K. DAVIS, ADMINISTRATIVE LAW TREATISE § 18.01, at 545–46 (1958)). Unlike the typical court case decided "on relatively fixed principles of law for the principal purpose of settling the rights of the parties ... the actions of administrative agencies are usually concerned with deciding issues according to a public interest that often changes with shifting circumstances and passage of time." *Peoples Gas Sys., Inc. v. Mason,* 187 So.2d 335, 339 (Fla.1966).

[3] **[4]** **[5]** In the field of administrative law, the counterpart to res judicata is administrative finality. *See Fla. Power Corp. v. Garcia,* 780 So.2d 34, 44 (Fla.2001); *Metro.*

 © 2025 Thomson Reuters. No claim to original U.S. Government Works.

Dade County Bd. of County Comm'rs v. Rockmatt Corp., 231 So.2d 41, 44 (Fla. 3d DCA 1970). Florida courts do not apply the doctrine of administrative finality when there has been a significant change of circumstances or there is a demonstrated public interest. *See Fla. Power & Light Co. v. Beard*, 626 So.2d 660 (Fla.1993); *Univ. Hosp., Ltd. v. Agency for Health Care Admin.*, 697 So.2d 909, 912 (Fla. 1st DCA 1997) (citing *Thomson*, 511 So.2d at 991 ("[R]es judicata cannot bar a subsequent application for a permit if the second application is 'supported by new facts, changed conditions, or additional submissions by the applicant.' ")); *see also Garcia*, 780 So.2d at 44 (Fla.2001); *Doheny v. Grove Isle, Ltd.*, 442 So.2d 966 (Fla. 1st DCA 1983). Further, the determination of whether a significant change in circumstances has occurred lies primarily within the discretion of the administrative agency. *See, e.g., Miller v. Booth*, 702 So.2d 290 (Fla. 3d DCA 1997); *Gunn v. Bd. of County Comm'rs*, 481 So.2d 95 (Fla. 3d DCA 1986).

[6] **[7]** We disagree with appellants' contention that Bethesda's second application ***30** should have been summarily denied based on administrative finality. This case is controlled by *Thomson v. Department of Environmental Regulation*, 511 So.2d 989, 991–92 (Fla.1987). In that case, faced with similar applications, the Florida Supreme Court focused on the differences between the two applications and held that res judicata "cannot be fairly applied to deny ... a second application on its face" and that the applicant is "entitled to a formal hearing on their second application" to present "new facts, changed conditions, or additional submissions." (citing *Univ. Constr. Co. v. City of Fort Lauderdale*, 68 So.2d 366 (Fla.1953); *Doheny v. Grove Isle, Ltd.*, 442 So.2d 966, 976 (Fla. 1st DCA 1983)); *cf. Glidden v. Dep't of Juvenile Justice*, 870 So.2d 962 (Fla. 1st DCA 2004). Florida favors administrative hearings to develop and flesh out the differences between successive administrative applications.

[8] In fact, competent and substantial evidence at the administrative hearing supported the administrative law judge's conclusion that there had been substantial changes in material circumstances between the two applications.

First, because of the repeal of a crucial administrative rule, the legal framework for the second application was different than the one applied in the first application. Florida Administrative Code Rule 59C–1.038 was repealed effective April 21, 2005. The repeal of this rule eliminated the Agency's methodology for determining need for new acute care beds, but it did not undermine the general proposition that "need" is the polestar of CON law. In the absence of the methodology in the acute care bed need rule, the determination of "need" for new acute care beds must be made based upon a balanced consideration of the statutory criteria in section 408.035, Florida Statutes, and the criteria in Florida Administrative Code 59C–1.008(2)(e)2, which provides:

> If no agency policy [upon which to determine need for the proposed beds or service] exists, the applicant will be responsible for demonstrating need through a needs assessment methodology which must include, at a minimum, consideration of the following topics, except where they are inconsistent with the applicable statutory or rule criteria:
>
> a. Population demographics and dynamics;
>
> b. Availability, utilization and quality of like services in the district, subdistrict or both;
>
> c. Medical treatment trends; and
>
> d. Market conditions.

Manatee Mem'l Hosp. v. AHCA, Case No. 04–2723CON, 2005 WL 3733782 (Fla.Div.Admin.Hrgs. Dec. 1, 2005). Thus the repeal of the "bed need" rule altered the legal and evidentiary framework for assessing need for acute care hospital projects.

In addition to the repeal of rule 59C–1.038, the administrative law judge made numerous factual findings supporting the conclusion that there had been significant changes of circumstances between *Bethesda I* and *Bethesda II* concerning (1) the operating and financial position of Wellington Regional; (2) population growth in southwestern Palm Beach county that "exceeded the population projections in *Bethesda I;* " (3) the explosion of residential construction activity in the geographic area to be served by Bethesda's proposed hospital and the area to the north surrounding Wellington Regional; (4) the growing and increasingly unpredictable traffic congestion in the West Boynton area and throughout Palm Beach County, due in large part to rapid population ***31** growth and planned traffic signal installations along major arterial roadways; (5) the increase since 2004 in "observation" patients, patients whose conditions do not qualify for inpatient admission, but who

 © 2025 Thomson Reuters. No claim to original U.S. Government Works.

are not in a condition to be discharged; (6) the special needs of the elderly that are not adequately served because of emergency room overcrowding; (7) the support of Palm Beach Fire Rescue and the Sheriff's Office for Bethesda's proposed hospital; (8) Bethesda's proposal for a focused geriatric program that was not part of its earlier application, and (9) the 2004 and 2005 hurricanes which exposed the vulnerability of the local health care system in responding to the medical needs of a large population at times of natural disaster.

The administrative law judge balanced the statutory and rule criteria, and found that the factors that supported the earlier denial did not carry as much weight as they did before. Competent, substantial evidence supports the conclusion that material changed circumstances existed, so that the doctrine of administrative finality does not bar Bethesda's second application. *See, e.g., Morton F. Plant Hosp. Ass'n, Inc. v. State,* 491 So.2d 586 (Fla. 1st DCA 1986); *Heifetz v. Dep't of Bus. Reg. Div. of Alcoholic Beverages,* 475 So.2d 1277, 1281–82 (Fla. 1st DCA 1985).

We have considered the other points raised by appellants and find them to be without merit.

GROSS, C.J., POLEN, J., and GOLDENBERG, RENEE, Associate Judge, concur.

All Citations

5 So.3d 26, 34 Fla. L. Weekly D240

Footnotes

1 Our affirmances in the JFK case, No. 4D07–3527, and the Wellington case, number 4D07–3528, are being issued at the same time as this opinion.

End of Document

© 2025 Thomson Reuters. No claim to original U.S. Government Works.

626 So.2d 660
Supreme Court of Florida.

FLORIDA POWER & LIGHT COMPANY, Appellant,
v.
Thomas M. BEARD, etc., et al., Appellees.

No. 79338.
|
Oct. 28, 1993.

Synopsis
Electric company appealed order of Public Service Commission eliminating regulatory out clauses from standard offer contracts between electric utilities and small cogenerator qualifying facilities (QF). The Supreme Court, Grimes, J., held that Commission's decision was supported by substantial competent evidence that these clauses made financing of cogeneration projects difficult or more expensive, and decision was consistent with doctrine of administrative finality.

Affirmed.

Procedural Posture(s): On Appeal.

West Headnotes (1)

[1] **Electricity** Regulation of Supply and Use

Public Service Commission's decision to remove "regulatory out clause" from electric company's proposed standard offer contract with small qualifying facilities (QF) for purchase of cogenerated power was supported by substantial competent evidence and was consistent with doctrine of administrative finality; clause, which provided that, if company was denied cost recovery for payments made to cogenerators at some future date, company could choose to terminate or renegotiate contract, or to continue payment of lower allowed payments, created mistaken perception that revenues under standard offer contract were not reliable, making financing of cogeneration projects difficult or more expensive. West's F.S.A. §§ 366.051, 366.06, 366.81.

3 Cases that cite this headnote

Attorneys and Law Firms

***660** Matthew M. Childs and Jennifer Prior of Steel, Hector & Davis, Tallahassee, for appellant.

Robert D. Vandiver, Gen. Counsel and David E. Smith, Director of Appeals, Florida Public Service Com'n, Tallahassee, for appellees.

Suzanne Brownless of Suzanne Brownless, P.A., Tallahassee, amicus curiae for Air Products and Chemicals, Inc.

Opinion

GRIMES, Justice.

Florida Power and Light Company (FPL) appeals an order of the Florida Public Service Commission (the Commission) eliminating "regulatory out" clauses from standard offer contracts between electric utilities and qualifying facilities. We have jurisdiction under article V, section 3(b)(2) of the Florida Constitution.

In section 366.81, Florida Statutes (1991), the Legislature set forth the findings and intent underlying the Florida Energy Efficiency and Conservation Act, sections 366.80–.85, Florida Statutes (1991). Specifically, the Legislature found that cogenerated power is beneficial to the state and should be encouraged as it provides a more efficient and cost-effective energy conservation system. § 366.81, Fla.Stat. (1991); *see also* § 366.051, Fla.Stat. (1991). Section 366.051 provides, "The electric utility in whose service area a cogenerator or small power producer is located shall purchase, in accordance with applicable law, all electricity offered for sale by such cogenerator or small power producer...." Pursuant to section 366.051, the Commission is required to establish guidelines for the ***661** purchase of power or energy by public utilities from cogenerators or small power producers and may establish the rates at which a public utility must purchase power or energy from these types of facilities.

The Florida Administrative Code classifies certain cogenerators and small power producers as "qualifying facilities" (QFs). Fla.Admin.Code R. 25–17.080. [1] It is these types of cogenerators and small power producers to which section 366.051 applies. Florida Administrative Code Rules

25–17.080–.091 set forth the manner in which a utility may purchase QF power, one of which is the "standard offer contract."

A standard offer contract is an agreement between a utility and a "small" QF for the purchase of firm capacity and energy. Fla.Admin.Code R. 25–17.0832(3)(a). [2] It sets forth the rates, terms and other conditions pursuant to which the utility will purchase firm capacity and energy from the QF. Fla.Admin.Code R. 25–17.0832(3)(b). The Florida Administrative Code requires each public utility to submit for Commission approval a tariff and standard offer contract for the purchase of firm capacity and energy from small QFs. Fla.Admin.Code R. 25–17.0832(3). Standard offer contracts may be accepted by the small QF in lieu of a separately negotiated contract. Fla.Admin.Code R. 25–17.0832(3)(c). [3]

In October 1990, the Commission directed each investor-owned utility to file its most recent ten-year generation expansion plan, a standard interconnection agreement, and one or more standard offer contracts to purchase capacity from small QFs to avoid the construction of capacity identified in their plans. Order No. 23625 (Oct. 16, 1990). The standard offer contract submitted by FPL for Commission approval contained the "regulatory out" clause at issue in this case. Regulatory out clauses suspend a utility's payment obligations to QFs to the extent that the utility is not allowed to recover those payments from its customers. The clause in the instant case provides:

> Notwithstanding anything in this Contract to the contrary, should FPL at any time during the term of this Contract fail to obtain or be denied the FPSC's authorization, or the authorization of any other regulatory or governmental body which now has or in the future may have jurisdiction over FPL's rates and charges, to recover from its customers all of the payments required to be made to the QF under the terms of this Contract or any subsequent amendment to this Contract, the Parties agree that, at FPL's option, they shall renegotiate this Contract, or any applicable amendment. If FPL exercises such option to renegotiate, FPL shall not be required to make such payments to the extent that FPL's authorization to recover them from its customers is not obtained or is denied. FPL's exercise of its option to renegotiate shall not relieve the QF of its obligation to repay the balance in the Capacity Account. It is the intent of the Parties that FPL's payment obligations under this Contract or any amendment hereto are conditioned upon FPL being fully reimbursed for such payments through the Fuel and Purchased Power Cost Recovery Clause or other authorized rates or charges. Any amounts initially recovered by FPL from its ratepayers but for which recovery is subsequently disallowed by the FPSC and charged back to FPL may be set off or credited against subsequent payments made by FPL for ***662** purchases from the QF, or alternatively, shall be repaid by the QF.

Under this clause, should FPL be denied cost recovery for payments made to cogenerators at some future date, the utility could, at its sole discretion, terminate the contract, renegotiate the contract, or continue payment of the lower allowed payments with no other changes in the terms of the contract.

After an evidentiary hearing, the Commission approved FPL's standard offer contract. However, the Commission determined that regulatory out provisions should not be included in standard offer contracts and struck the regulatory out clause from FPL's contract. The Commission's order states:

> 6. REGULATORY OUT CLAUSE
>
> ... There is no need for a regulatory out provision in standard offer contracts in the State of Florida.
>
> Our decision here applies only to standard offer contracts for the purchase of firm capacity and energy from small qualifying facilities less than 75 MW or from solid waste facilities as defined in Rule 25–17.091, Florida Administrative Code. A significant difference between standard offer and negotiated contracts is that we require

 © 2025 Thomson Reuters. No claim to original U.S. Government Works.

> utilities to purchase firm capacity and energy pursuant to standard offer contracts. The utilities are given no choice. Therefore, when we approve the standard offer contract, we make a commitment that we will allow cost recovery of payments made to small QFs. Because we have made such a commitment, there is no need for a regulatory out provision in the standard offer. We have no intention of revisiting our decision to allow cost recovery. Therefore, the regulatory out provision has become unnecessary surplusage. Such provisions create a mistaken perception that revenues under a standard offer are not reliable. This is not the case.

Order No. 24989 (Aug. 29, 1991) at 70–71. The order further states that Commission approval of a standard offer contract constitutes a determination by the Commission that any payments made to a QF under the standard offer contract constitute reasonable and prudent expenditures by the utility under section 366.06, Florida Statutes (1991). According to the order, once the Commission's determination becomes final by operation of law, the Commission cannot deny a utility cost recovery of payments made to the QF pursuant to the standard offer contract, "absent some extraordinary circumstance relating to the finding of prudence, such as where our finding of prudence was induced through perjury, fraud or the intentional withholding of key information." *Id.* at 71. Thus, the Commission concluded that utilities and QFs should be able to rely on the finality of the approval of cost recovery under standard offer contracts without fear of modification. [4]

In this appeal, FPL argues that the Commission's decision to eliminate the regulatory out clause was based on a misinterpretation of the doctrine of "administrative finality" and the faulty legal conclusion that the finality of the Commission's decision rendered regulatory out clauses unnecessary. The rule of administrative finality provides that

> orders of administrative agencies must eventually pass out of the agency's control and become final and no longer subject to modification. This rule assures that there will be a terminal point in every proceeding at which the parties and the public may rely on a decision of such an agency as being final and dispositive of the rights and issues involved therein.

Peoples Gas Sys., Inc. v. Mason, 187 So.2d 335, 339 (Fla.1966). However, this Court has recognized exceptions to the doctrine of administrative finality based on a significant change of circumstances or a demonstrated public interest. *Reedy Creek Utils. Co. v. Florida Pub. Serv. Comm'n,* 418 So.2d 249 (Fla.1982); *Austin Tupler Trucking, Inc. v. Hawkins,* 377 So.2d 679 (Fla.1979); *Peoples Gas Sys., Inc.*

FPL asserts that circumstances could arise under which the Commission, acting in the public interest or pursuant to legislative ***663** mandate, would preclude the recovery of payments made to a QF. If this were to occur, the utility would have no recourse if its contract with the QF did not contain a regulatory out clause. Thus, FPL concludes that the Commission erred by eliminating the regulatory out provision from the standard offer contract as "unnecessary surplusage" based on the faulty assumption that its decision regarding cost recovery is final and unalterable and there is no risk of future regulatory disallowance.

The Commission responds that it has the authority to make its determination of prudence nonreversible over the life of the standard offer contract. The Commission points out that the cases relied upon by FPL only relate to the continuing viability of the Commission's orders in instances where it finds reason to change an order after it becomes final. The Commission asserts that it does not seek to establish the continuing validity of its approval of the recovery of QF payments by its inability to act, but rather that it has the authority to provide one-time, nonreversible approval of the prudence of payments made under a standard offer contract. [5]

The Commission is vested with the authority to review standard offer contracts to ensure that they are fair to the parties to the contract and that they further the energy policies of the state as defined by the Legislature. § 366.051, Fla.Stat. (1991). There is evidence in the record that regulatory out clauses make the financing of cogeneration projects difficult or more expensive because they create the perceived risk that revenues payable under the contract are subject to disallowance through no fault of the QF. As noted in the Commission's order, regulatory out clauses "create a mistaken perception that revenues under a standard offer contract are not reliable." Thus, the Commission's decision to eliminate regulatory out clauses from standard offer contracts furthers

 © 2025 Thomson Reuters. No claim to original U.S. Government Works.

Florida's policy of encouraging the cogeneration of electric power. At the same time, the Commission purported to guarantee that the utility could recover its QF payments absent extraordinary circumstances. Obviously, the risk of extraordinary circumstances has to fall on one or the other of the contracting parties. With respect to small QFs, the Commission chooses to place that risk on FPL. We believe that the Commission acted within its authority under sections 366.06, 366.051 and 366.81. [6]

We do not find the Commission's order inconsistent with the doctrine of administrative finality and its exceptions. By stating that it does not intend to revisit the decision to allow cost recovery, the Commission has endeavored to make its order as final as the law permits. The law guarantees FPL a reasonable rate of return upon its investment, and absent the extraordinary circumstances outlined in the Commission's order, FPL can have no reasonable apprehension that it will be unable to recover the payments it is required to make under the QF contract.

Accordingly, we hold that the Commission's decision to remove regulatory out clauses from standard offer contracts with small QFs is supported by substantial competent evidence and consistent with the doctrine of administrative finality. We affirm Order Numbers 24989 and 25569 of the Public Service Commission.

It is so ordered.

BARKETT, C.J., and OVERTON, McDONALD, SHAW, KOGAN and HARDING, JJ., concur.

All Citations

626 So.2d 660, Util. L. Rep. P 26,370, 18 Fla. L. Weekly S558

Footnotes

1 The Code adopts the Federal Energy Regulatory Commission Rules 292.101 through 292.207, effective March 20, 1980, regarding definitions and criteria that a small power producer or cogenerator must meet to achieve the status of a QF. Fla.Admin.Code R. 25–17.080(1). "Small power producers and cogenerators which fail to meet the FERC criteria for achieving qualifying facility status but otherwise meet the objectives of economically reducing Florida's dependence on oil and the economic deferral of utility power plant expenditures may petition the Commission to be granted qualifying facility status for the purpose of receiving energy and capacity payments pursuant to [the rules]." *Id.*

2 Small QFs are QFs less than 75 megawatts. Fla.Admin.Code R. 25–17.0832(3)(a).

3 Utilities may negotiate contracts for the purchase of firm energy and capacity from QFs of 75 megawatts or greater. *See* Fla.Admin.Code R. 25–17.0832(2).

4 The Commission reiterated its conclusion in its order denying Florida Power and Light's "Motion for Reconsideration and Clarification" of Order Number 24989. Order No. 25569 (Jan. 1, 1992).

5 The Commission also contends that Florida Power and Light does not have standing to pursue this appeal. We find this argument to be without merit. *See* § 120.68, Fla.Stat. (1991).

6 The fact that the Commission chose not to require the elimination of regulatory out clauses in contracts with large QFs does not undercut the Commission's position. The Commission had the discretion to conclude that the existence of regulatory out clauses was less harmful to large QFs.

End of Document

© 2025 Thomson Reuters. No claim to original U.S. Government Works.

697 So.2d 909
District Court of Appeal of Florida,
First District.

UNIVERSITY HOSPITAL, LTD., Appellant,
v.
STATE of Florida, AGENCY FOR HEALTH CARE ADMINISTRATION, Appellee.

No. 96–4066.
|
July 21, 1997.

Synopsis

Agency for Health Care Administration (AHCA) appealed order of Division of Administrative Hearings that found invalid proposed rules governing issuance of licenses to multiple-facility hospitals. The District Court of Appeal, 670 So.2d 1037, reversed. Hospital petitioned for formal administrative hearing, challenging denial of request for single class I license covering acute-care hospital and adjacent psychiatric hospital. Petition was dismissed on ground of collateral estoppel. Hospital appealed. The District Court of Appeal, Ervin, J., held that hospital was entitled to hearing.

Reversed and remanded.

Procedural Posture(s): On Appeal.

West Headnotes (5)

[1] **Res Judicata** Issues or questions

"Collateral estoppel", or estoppel by judgment, precludes determination of any issue that was fully, fairly, and actually adjudicated in previous litigation.

2 Cases that cite this headnote

[2] **Res Judicata** Motion, demurrer, or exception

Collateral estoppel is affirmative defense that is precluded from resolution by motion to dismiss, as question of its application requires examination of extrinsic evidence, rather than simply the four corners of complaint.

[3] **Res Judicata** New or subsequent events

Collateral estoppel does not apply where unanticipated subsequent events create new legal situation.

1 Case that cites this headnote

[4] **Administrative Law and Procedure** Res judicata or claim preclusion

Res judicata cannot bar subsequent application for permit if second application is supported by new facts, changed conditions, or additional submissions by applicant.

2 Cases that cite this headnote

[5] **Health** Proceedings on application

Any determination of whether hospital seeking single class I license for two facilities was collaterally estopped by reason of its adoption of inconsistent positions was premature, and such issue could not be correctly decided until hospital was accorded formal administrative hearing. West's F.S.A. § 120.57(1).

Attorneys and Law Firms

*910 Stephen A. Ecenia and Thomas W. Konrad of Rutledge, Ecenia, Underwood, Purnell & Hoffman, P.A., Tallahassee, for Appellant.

Richard M. Ellis, Agency for Health Care Administration, Tallahassee, for Appellee.

Opinion

ERVIN, Judge.

This is an appeal from an order entered by appellee, the Agency for Health Care Administration (AHCA), dismissing the petition of appellant, University Hospital (UH), for a formal administrative hearing on the ground of collateral estoppel. We conclude that the agency's determination of collateral estoppel is inapplicable, and reverse the order of

 © 2025 Thomson Reuters. No claim to original U.S. Government Works.

dismissal and remand the case with directions to the agency to furnish UH a formal administrative hearing.

UH has for several years been seeking a single, Class I acutecare hospital license to cover both University Hospital, an acute-care hospital, and University Pavilion Hospital, a psychiatric hospital that UH owns which is adjacent to University Hospital. UH's purpose in seeking a single, Class I license is to qualify for Medicaid reimbursement for mental health services provided at University Pavilion. [1] A brief history of the litigation involving the parties is in order.

In 1994, UH and two other hospitals challenged Florida Administrative Code Rule 59C–1.004(2)(i), which required certificate-of-need (CON) review for hospitals applying for a consolidated license for multiple health-care facilities under section 395.003(2)(d), Florida Statutes (1993). [2] The hearing officer found the rule invalid, as it exceeded the scope of the statute, because the statute mandates the agency to issue a single license for facilities on separate premises once a licensee makes such request, without any requirement of a CON review. *University Hosp., Ltd. v. Agency for Health Care Admin.*, 16 F.A.L.R. 3312 (Fla. Div. of Admin. Hearings 1994). AHCA did not appeal, but instead promulgated rules permitting it to issue a single license for facilities on separate premises, but to classify each hospital separately, rather than both under one classification. AHCA issued UH a single license but classified University Hospital as a Class I hospital and University Pavilion as a Class III specialty psychiatric hospital, thus precluding ***911** UH from obtaining Medicaid reimbursement.

Thereafter, UH and other hospitals challenged the new rules both administratively and judicially. First, the hearing officer found the new rules to be invalid, holding that the rules improperly permitted the license to include material beyond that which the statute required. This court reversed, concluding that the rules constituted a permissible interpretation of section 395.003(2)(d); therefore, the agency could continue to issue single licenses containing separate hospital classifications for the separate facilities. *Agency for Health Care Admin. v. University Hosp., Ltd.*, 670 So.2d 1037 (Fla. 1st DCA), *review denied*, 679 So.2d 774 (Fla.), *and*, 679 So.2d 775 (Fla.1996). In the circuit court, UH and other hospitals filed petitions for writs of mandamus, which the court issued, holding that section 395.003(2)(d) entitled licensees to a single license for facilities on separate premises, and that such license must be unrestricted so that the hospitals would be entitled to Medicaid reimbursement. This court reversed, stating that nothing in section 395.003(2)(d) required that the license consolidate each facility under the same hospital classification. *Agency for Health Care Admin. v. Sebastian Hosp., Inc.*, 670 So.2d 1040 (Fla. 1st DCA), *review denied*, 679 So.2d 774 (Fla.), *and*, 679 So.2d 775 (Fla.1996).

As a consequence, UH thereafter sent a letter to AHCA, asking once again for a Class I license for both hospitals. UH stated that it had learned that AHCA had issued Class I licenses to other similarly situated multiple-facility hospitals which previously had consolidated licenses, by construing as single premises what AHCA had previously considered to be "separate premises" under section 395.003(2)(d). "Premises" is defined in section 395.002(22), Florida Statutes (1995), as

> those buildings, beds, and equipment located at the address of the licensed facility and all other buildings, beds, and equipment for the provision of hospital or ambulatory surgical care located in such reasonable proximity to the address of the licensed facility as to appear to the public to be under the dominion and control of the licensee.

AHCA denied UH's request, explaining that UH had characterized University Hospital and University Pavilion as located on separate premises throughout the course of prior litigation, and that the other hospitals UH referred to in its letter had at all times had separate facilities on the same premises.

In response, UH filed a petition for a section 120.57(1) hearing, the subsequent dismissal of which is the subject of this appeal, alleging that during the pendency of the above earlier appeals, AHCA had issued single, Class I licenses to other similarly situated hospitals whose facilities were located on a single premises, yet those hospitals had previously obtained consolidated licenses pursuant to section 395.003(2)(d), which required facilities to be on separate premises. UH alleged that its facilities were also on single premises and that AHCA had altered its prior practice relative to the issuance of the license UH was seeking, without notice to UH, thereby treating similarly situated entities in an illogical, dissimilar and arbitrary manner, violating the

 © 2025 Thomson Reuters. No claim to original U.S. Government Works.

state and federal constitutions, invalidly exercising delegated legislative authority, and violating state and federal law.

AHCA filed a motion to dismiss, raising several issues, including collateral estoppel. The agency dismissed UH's petition with prejudice on the basis only of collateral estoppel, stating that during two years of litigation in administrative and judicial forums, UH had consistently represented its facilities as being located on "separate premises," pursuant to section 395.003(2)(d); accordingly, it was estopped from thereafter alleging that the two facilities are situated on the same premises.

[1] **[2]** Although UH has raised several issues in its appeal, the only one necessary for us to address, by reason of AHCA's ruling, is whether UH's petition for a formal, administrative hearing was correctly dismissed on the ground of collateral estoppel. In agreeing with UH that it is entitled to a hearing on this issue, we note that collateral estoppel, or estoppel by judgment, precludes a determination of any issue that was fully, fairly ***912** and actually adjudicated in previous litigation. *See Gordon v. Gordon,* 59 So.2d 40 (Fla.1952). Nevertheless, the issue of whether collateral estoppel bars a petition for a section 120.57(1) hearing is ordinarily a factual decision which cannot be appropriately resolved by a motion to dismiss. By analogy, in the civil context, collateral estoppel is an affirmative defense that is precluded from resolution by motion to dismiss, because the question of its application requires examination of extrinsic evidence (the pleadings and judgments in the prior litigation), rather than simply the four corners of the complaint. *See Moskovits v. Moskovits,* 112 So.2d 875 (Fla. 1st DCA 1959); *Sproul v. McDonald's Sys., Inc.,* 397 So.2d 462 (Fla. 4th DCA 1981).

More importantly, the gravamen of UH's complaint is that AHCA has perpetrated an injustice to it based upon its allegedly fluid interpretation of the term "single premises" vis-à-vis "separate premises." UH readily acknowledges that it sought licensure under section 395.003(2)(d), which applies only to facilities on separate premises, but claims that it did so because that was the means by which AHCA had hitherto licensed separate but related facilities. Later, however, according to UH, AHCA changed its policy by issuing single Class I licenses to separate facilities that it had previously licensed under section 395.003(2)(d), by determining that such facilities are located on a single premises. UH contends that its situation is indistinguishable from that of Sarasota County Public Hospital, South Seminole Joint Venture, Lower Florida Keys Health System and other facilities, and that AHCA is treating it differently from such hospitals, in violation of the law.

[3] **[4]** We note that collateral estoppel "does not apply where unanticipated subsequent events create a new legal situation." *Krug v. Meros,* 468 So.2d 299, 303 (Fla. 2d DCA 1985). In a comparable context, res judicata cannot bar a subsequent application for a permit if the second application is "supported by new facts, changed conditions, or additional submissions by the applicant." *Thomson v. Department of Envtl. Reg.,* 511 So.2d 989, 991 (Fla.1987).

[5] Accordingly, any determination of whether UH was collaterally estopped by reason of its adoption of inconsistent positions is premature, and such issue cannot be correctly decided until after UH is accorded a section 120.57(1) hearing.

REVERSED and REMANDED.

BENTON, J., and SMITH, Senior Judge, concur.

All Citations

697 So.2d 909, 22 Fla. L. Weekly D1827

Footnotes

1 *See* § 409.905(5), Fla. Stat. (1995) (precluding Medicaid eligibility for licensed hospitals operated primarily for psychiatric patients).

2 Section 395.003(2)(d) provides in part:

 © 2025 Thomson Reuters. No claim to original U.S. Government Works.

The agency shall, at the request of a licensee, issue a single license to a licensee for facilities located on separate premises. Such a license shall specifically state the location of the facilities, the services, and the licensed beds available on each separate premises.

End of Document

© 2025 Thomson Reuters. No claim to original U.S. Government Works.

In the Matter Of:

FERREIRA vs MIAMI SPRINGS

05-3118-016-1590

HEARING

February 26, 2025

ESQUIRE
DEPOSITION SOLUTIONS

800.211.DEPO (3376)
EsquireSolutions.com

CITY OF MIAMI SPRINGS
BOARD OF ADJUSTMENT

MICHELLE FERREIRA,

Applicant,

-vs- FOLIO NO. 05-3118-016-1590

CITY OF MIAMI SPRINGS,

Defendant.

HEARING BEFORE THE

BOARD OF ADJUSTMENT

February 26, 2025

6:06 p.m.

Miami Springs City Hall

201 Westward Drive

Miami Springs, Florida 33166

Jose Patino
Digital Reporter
Notary Commission No. HH 604222

APPEARANCES OF COUNSEL

On behalf of the Applicant, MICHELLE FERREIRA:

KRISTOFER D. MACHADO, ESQ.
AKERMAN LLP
Three Brickell City Centre
98 Southeast 7th Street
Suite 1100
Miami, Florida 33131
305-982-5658
kristofer.machado@akerman.com

On behalf of the Defendant, CITY OF MIAMI SPRINGS:

ALEJANDRO URIBE SEVILLA-SACASA, ESQ.
HAYDEE SERA, ESQ.
WEISS SEROTA HELFMAN COLE & BIERMAN, PL
2800 Ponce De Leon Boulevard
Suite 1200
Coral Gables, Florida 33134
305-854-0800
auribe@wsh-law.com
hsera@wsh-law.com

Attendees:
Bill Tallman, Chair
Rogelio Madan, Chair
Juan Molina, Board Member
Orlando Lamas, Board Member
Joe Valencia, Board Member
Michelle Ferreira, Applicant
Erika Gonzalez, City Clerk

INDEX TO EXAMINATION

EXAMINATION	PAGE
FRANCISCO FERNANDEZ	
Direct Testimony	6
HENRY ILER	
Direct Testimony	23
Cross-Examination By Mr. Uribe	40
Redirect Examination By Mr. Machado	43
Recross-Examination By Mr. Uribe	45
Further Redirect Examination By Mr. Machado	46
SILVIA VARGAS	
Direct Examination By Mr. Uribe	48
Cross-Examination By Mr. Machado	91
Redirect Examination By Mr. Uribe	113
Recross-Examination By Mr. Machado	116
Further Redirect Examination By Mr. Uribe	117
ULISES FERNANDEZ	
Direct Examination By Mr. Uribe	74
Cross-Examination By Mr. Machado	78
Redirect Examination By Mr. Uribe	86
Recross-Examination By Mr. Machado	87

(The proceedings commenced at 6:06 p.m.)
MR. TALLMAN: We're calling this to order at 6:06 p.m. Please call the roll.
MS. GONZALEZ: Chair of the -- Chair Bill Tallman.
MR. TALLMAN: Here.
MS. GONZALEZ: Vice chair, Rogelio Madan.
MR. MADAN: Here.
MS. GONZALEZ: Board member, Juan Molina.
MR. MOLINA: Here.
MS. GONZALEZ: Board member, Orlando Lamas.
MR. LAMAS: Here.
MS. GONZALEZ: Board member, Joe Valencia.
MR. VALENCIA: Here.
MS. GONZALEZ: There is a quorum present.
MR. TALLMAN: Thank you very much.
And the first thing on our agenda is the approval of the minutes of our last meeting. If I could get --
MR. MOLINA: I move to approve.
MR. TALLMAN: And a second.
MR. VALENCIA: Second.
MR. TALLMAN: All in favor.
MR. VALENCIA: Aye.
MR. MOLINA: Aye.

MR. MADAN: Aye.
MR. TALLMAN: Okay. We have witnesses present. If we could please have you stand up, and the clerk is going to swear you in.
MS. GONZALEZ: Please raise your right hands.
(Parties sworn.)
MS. GONZALEZ: Thank you.
MR. TALLMAN: I know that we received two letters from Mr. Rubio and Ms. Bennetti. Is there anybody else here? Have we received any other correspondence or is there anyone else that wants to speak from the public on this matter? Okay.
MR. F. FERNANDEZ: I may.
MR. TALLMAN: Yep. Actually, we're going to swear you in too.
MR. F. FERNANDEZ: Okay.
MS. GONZALEZ: Please raise your right hand.

FRANCISCO FERNANDEZ,

having first been duly sworn, testified as follows:

MR. TALLMAN: Thank you.
THE REPORTER: Excuse me. For the record, may I please have his name?
MR. F. FERNANDEZ: Sure. Francisco Fernandez.
THE REPORTER: Thank you.
MR. TALLMAN: And actually, Frank --

MR. F. FERNANDEZ: Yeah, sure.
MR. TALLMAN: -- you're up.
MR. F. FERNANDEZ: Oh, I'm up.
MR. TALLMAN: Yeah.
MS. GONZALEZ: Take this one for you.

DIRECT TESTIMONY

MR. F. FERNANDEZ: Okay. Yeah. Good evening. The reason I'm here is I, like Bill, I've sat on that side of the desk many years ago, and I did it for several years. And I understand what's occurring. And a little bit of background, if I may, on the -- on the owners of the property Esplanade -- they're a young couple that chose Miami Springs to be their future home, and they could have lived anywhere, but they decided it would be the Springs. And with that in mind, what they're trying to do is contribute to the community, not take away from the community. They went ahead and fought and worked hard and tried to do everything that possibly could be done within their realm to make sure they followed the rules.

So when they bought the house naturally, they went ahead and went through the process. They went ahead and had an appraisal. They had a survey. And they went through the lending order that double scrutinizes where they're going to spend their money.

So they didn't try to court -- cut any corners. They were upfront. They did everything as they should. That in mind, they knew that they wanted to make the home better than what they found it because they plan that one day settle down here in the city of Miami Springs and hopefully raise their family here. So they went ahead and save and hired an architect to do the plans.

So they went ahead. Had the architect submit the plan. They went through the city, didn't try to cut any corner. They had the plans reviewed. The city reviewed the plans. And with that in mind, they went ahead and approved the plans. Once the plans were approved, they went ahead and started little by little doing the work.

And there's -- there is the issue here. They started doing the work back in I think it was about '22, I believe. They're almost finished with what they're doing. And now the problem arises. So for two and a half years, there was no problem. The footprint of the home where they're at, they didn't encroach any further into any of the setbacks than was already there. There's pictures. There's aerials showing that the footprint of the house is at the same location going back to at least 1994, okay? The neighbors are

pretty much all the same except the neighbor to the southbound, which -- a relatively new neighbor, the neighbor to -- on the other side, on the Falcon side has been here for 12 years or 14 years. I don't know how many years. And the house was always the same footprint. It was always the same distance from the owners of Esplanade.

And when they bought, there was no issue. So for whatever number of years, ten, 12 years, it wasn't an issue to the point where they went ahead and they too wanted -- they chose Miami Springs because they wanted Miami Springs, and they liked it. And there was no issue when they bought the house because it was the same distance. They didn't move it any closer to their house. They didn't move it any closer. What these -- what this young couple tried to do was plan for the future. They went ahead and they elevated the home because of the flood plain. That house has been there since almost 70 years, same location, same location. Go back and look at the areas going back to '94. They raised the roof, and they follow the same property line. And after all this time, it becomes a problem. I mean, just because they're improving it -- the property.

There's a lot to be said, but those are the

main points I'd like to make, that they follow the rules. The city did their part. They did their -- you can't ask more of these individuals that have gone by the book, according to what the city asked them. They took the due diligence that they could and relied on those people that give them the guidance, the city, the architect, the surveyor, and they all did it within what they could to make sure it was done right. They didn't cut corners, and that's what I'm here to testify on their behalf. Thank you very much.

MR. TALLMAN: Thank you. Okay. Petitioners, if you would like to make your presentation.

MR. MACHADO: Good evening.

Erika, could you please put up the presentation?

For the record, Kristofer Machado. I'm with Akerman LLP, offices at 98 Southeast Seventh Street, Miami, Florida 33131. I'm joined by our client, Michelle Ferreira, the owner of 300 Falcon Avenue. She is an attorney. She's a partner at our law firm. She practices real estate law, and we're also joined by Henry Iler, our expert witness.

I'd like to go through briefly and explain some of the history of the property. I'll turn it over to Henry and he can make his presentation on his

opinion as to the planning issues at stake here. And then Michelle will give her view as to how she's been affected by this. And you'll see how the new addition to the property next to her is within a few feet of her property. And it raises all sorts of concerns about light, air, privacy, the typical things that affect neighbors when they build too close to each other, especially in a community like this.

So if we could just start by giving a brief aerial image. I think it is important to look at the aerial of the property. What we have here is the corner property, and I'll point to it on the screen, I guess here, you can't really see it, but the corner property here --

MS. GONZALEZ: Want to dim the lights?

MR. MACHADO: Yeah. The corner of the white property is 200 North Esplanade, and the one next to it with the swimming pool is 300 Falcon Avenue. You can see that the front of the Esplanade property has steps leading to Esplanade, and it also has a driveway on Esplanade, and there is at the rear of that property, a series of rows that you can see in white and gray. And we will describe that later, but that is an aluminum shed that was constructed years after the house was built. So this gives you a sense of the separation

between the properties. This aerial is from 2007, and you can see plenty of green space between the two houses and you can also see what is a rear yard separating the two properties. Importantly here, you see that the Falcon property has its front on Falcon Avenue. The Esplanade property has its front on Esplanade.

We'll go to the next slide. So this is what we have today, right? We have a house that has been added onto, and it is much closer to the Falcon property than it was before. We go back one slide. You see that not only did they extend the line of the aluminum structure, they also extended the line of what is an accessory structure at that corner area. So that there is very minimal separation between the two properties. That is the issue, the proximity that they have created to Michelle's property. And we are going to present to you the case for why the improvements that were made here are improvements in a required rear yard setback of 25 feet by your zoning code.

Just to compare the two 2007 on the left 2024 on the right. And you can see how that little area the top right of the Esplanade property was extended all the way down to make a substantial addition into that rear yard. Here, we have a view from Esplanade.

Barely any separation between two properties, and you can imagine living on Falcon Avenue living in Michelle's house, how close and claustrophobic you would feel with so little separation.

So how did this happen? Who knows, right? But we suspect there wasn't really a proper investigation into the records. We will show you documents that go back to the 1940s. But most particularly 1984 in which these two lots were subdivided to create two buildable lots. We think there was a failure to adhere to the zoning code by a misinterpretation of what setbacks are required. And we think that the proper procedures were not followed because although the applicant may well have made an application for a permit, they did not obtain a variance to build into that rear yard. And that variance would require them simply to come back here in the proper posture and ask this board for relief from what the zoning code requires.

Some relevant history for you. Here, we have an image of the plat. The two lots are shown in yellow. At the time this property was platted. The two lots were 50 by 150 and the staff in their report acknowledges that these two lots had frontage on Esplanade. There's no question when they were platted,

the front of the lot was on Esplanade by virtue of the zoning code in effect at the time. So again, the front yard, Esplanade.

So in 1947, there is a house, a single family house built across the two lots with frontage on Esplanade. That is the same house that exists at 200 North Esplanade today. It was built across the lots, not within any one particular lot. So at the time this happened, the rear of that house, the rear yard of that house, was vacant. And we'll see how in 1984, the owner of those two lots applied to subdivide the two lots to be able to construct at the rear of the existing house and to ultimately construct what was going to be and became Michelle Ferreira's residence. This here is an excerpt from your city staff report that acknowledges that in 1947, the structure that exists on what today is the 200 North Esplanade Drive location was built with setbacks in compliance with that orientation, meaning in compliance with the orientation onto Esplanade.

I want you to focus on this image, and I will explain later what the significance of this image is. But this is a document that we found in the public records in the city's file. You'll see a dashed line that crosses a third of the property. It's a 75 by 100

lot at this point. The dash line follows closely at the rear of the existing house, and there is a label, 25 feet. This document is in the public record. It's maintained on file with the city. It's not altered with the exception of just highlighting that number 25. We'll come back to this.

So in 1984, we have the waiver plat process to allow the construction of 300 Falcon Avenue. We begin with a letter from the property owner to David Wells, the building official of the city saying we'd like to subdivide the property to provide for the construction of a new house at the rear. There's an existing house as you can see on the right. And then there's the lot in question, which would become 300 North Esplanade. So this is August 4th, 1983. There is a letter submitted to the city requesting subdivision approval.

And then in September 13th, 1983, Mr. Wells, the building official responds and says, here are what you'll need to process the subdivision application. You'll need to show that there are two lots 75 by 100, and you'll need to show that the accessory structures, right, that are only of accessory value have to be removed for a line that will yield a 10 percent on the side, 25 foot setback in the rear. And he also said you cannot create a non-conforming improvement. That

is the issue here. You cannot create a non-conforming improvement situation. You have to remove the accessory structures to yield proper setbacks.

Again. In June of '84, we have an additional letter where again, the building official says, please be advised prior to issuing a waiver of plat to allow the subdivision, 200 North Esplanade must show front setback of 30 rear setback of 25 and 10 percent for side setbacks. You have to show us your plan for achieving proper setbacks. And here's the letter that I want you to focus on. This is June 20th, 1984. There are three excerpts highlighted here. There actually -- there's a fourth one that I'll put on the next page, but this is basically the city telling the applicant here are the requirements to be able to subdivide. Okay.

The first one is existing improvements must comply with all setback requirements. In this case, the house, which is presently situated on the lot and facing 200 North Esplanade Drive must have minimum setbacks of front yard, 30 feet, rear yard 25 feet. And here's the crux, 15 foot setback on the side of the house facing Falcon Avenue. That there tells you Falcon Avenue was not the front yard, 15 feet on the side facing Falcon Avenue. Mind you, the front setback

is 30 feet, right? And then 10-feet setback on the south side of the house that is opposite the other side. No building permit can be issued for the remaining portion of the platted block, i.e. Michelle Ferreira's property until all encroachments into the above described setback areas have been removed. So again, this is the official determining that the front facing Falcon, what the city claims of the front, is actually a side. The front faces Esplanade.

Here, we have a memo from the city attorney from July 23rd, 1984. The only thing of importance here -- this is a memo regarding subdivision improvement sewer assessments. What's critical here is that the city attorney stated that the city code at the time allows the resubdivision of property without the necessity of platting so long as certain specific conditions are met. And we will discuss those conditions with you briefly.

So here we are. This is the ordinance that allowed platting. And specifically it said, we can waive platting requirements as long as we impose certain conditions that may be deemed necessary and appropriate to preserve the public interest. We can waive it as long as these conditions are imposed.

So we have in the city staff report this

allegation that throughout its history, the city has treated the north Esplanade property as having its front yard on Falcon Avenue, and they cite to a building permit B 415 that is for the demolition of certain structures in connection with the replat approval, the waiver of plat approval in 1984. And the city as you'll hear claims that this shows that as far back as this building permit was issued, the front of this property was Falcon Avenue. But let's take a look at that permit. This is a permit dated September 7th, 1984 for the partial demolition of accessory building and rear yard structures to provide setbacks. It is clear from that text, though the handwriting is a little bit different. It's clear that is rear -- R-E-A-R. We can see the word yard has an R the same way as the word rear, the same way as the word structures and provide. It's an R-E-A-R.

Your city staff in their report misread this. They say it says, partial demolition of an accessory building and area yard structures provide setbacks. That is not what it says. It says, rear yard structures provide setbacks. Why is that important? Because in connection with the waiver of plat a building demo permit was issued to demolish certain structures to be able to provide a conforming rear yard

setback just as Mr. Wells had required in his letters that relate to that application. Here we have the affidavit for the company's, the application for the demo permit. They're demolishing an accessory building. We'll come back to that. Accessory building in the rear. And so as we see here, the plan that I first showed you, the 25 feet, there is a building at the rear within the 25-foot rear yard. And so it is our contention that demo permit relates to a partial demolition of that structure.

Please focus on how close that structure was to the property line. It's within a few feet of nine inches of the property line that building, as you'll see, was demolished in part to provide a conforming accessory yard setback of five feet, because it is an accessory building. The city claims that if we're right, that building had to be demolished in full because it was within a 25 foot rear yard setback. That's not true. It's an accessory building. It has to provide a five foot setback. And so the partial demolition of that structure is entirely consistent with the letters Mr. Wells issued and with our position that the rear of the house has always been and remains today, a rear yard.

And so in October of '84, Mr. Wells finally

issues the final letter saying, the lots have been re subdivided into two buildable lots measuring 75 by 100. So here's the timeline. '83, building official says, we can waive platting, but you can't create a nonconformity. And the accessory structures must be removed to provide rear setbacks. June of '84, building official identifies those conditions that are required, including meeting the setbacks. September of '84, a demo permit to demo the accessory rear yard structure in part. And then in '84, October, we have official documentation saying the lots have been resubdivided.

Relevant code provisions. Mr. Iler will walk through these with me in a little bit, but a front yard as it exists today, the same provision was in your code for corner lots. The lot front shall be the narrowest portion abutting the street, unless determined otherwise by the planning and zoning director. The city contends in their staff report that, well, the planning and zoning Director determined that the front was Falcon Avenue because it's the narrowest portion after the waiver of plat. But the letters clearly show he did no such thing. He determined that the rear of the house must remain a rear yard providing compliance setbacks. R-1C district setbacks 30 at the front,

seven and a half or 15 on the side, depending on the street side or interior, 25 foot in the rear. The same is true today. 10 percent, but for this lot to get a 75 feet of yield, seven and a half.

All right. So let's take our theory and run it down. Esplanade, front of the property. What do we have? We have 32 -- 35.26 feet at the front, 25.14 feet at the back, 13 feet on one side, 15 feet on the other. We have a compliant lot. Okay. These measurements came from the survey that's in the file provided by the property owner.

But if we take the city's theory and run it down, well, then when these lots were subdivided, Falcon became the front. Now we have a 15 foot front yard. That's not compliant. We have a rear yard of 13 feet. That's not compliant. And we have an interior side setback of 6.3 feet. That's not compliant. So under the city's theory, even though David Wells made clear in multiple letters that the property cannot create nonconformities, that it must provide proper setbacks, somehow the city claims David Wells changed his mind, dispensed with all that. Didn't write any letter memorializing it, but clearly reconsidered his decision. And instead of requiring a conforming lot, went ahead and approved a zoning deficient lot,

creating multiple violations. That simply is not a reasonable interpretation of the file.

Again, five feet is required in the rear for accessory structures. Here, we have 6.29 feet according to the property owner. That is consistent with an accessory setback. That does nothing to in any way impair our theory. It's entirely consistent with our argument.

Next contention, your staff reported is that there's a building permit in 2004 that was for a rear yard addition. They claim it's in addition. And that also shows that the front of the property was Falcon. Because if the front were not Falcon, they would never have approved a permit for an addition in the rear back in 2004. Let's look at that permit. This is from April 20th, 2004, addition of carport or garage, aluminum roof and concrete block slab. Rear yard accessory building. Rear yard accessory building.

Here we have a permit again, aluminum roof with a screen. Here we have those panels that I showed you in the aerial. That's an aluminum roof with a screen. That's what I showed you at the beginning. Here's a side view showing it's not an addition to the house. It's an aluminum roof with a screen. It's an accessory rear yard structure.

More to the point, property appraiser's map. The records show AD 1, building addition without plumbing. EN 1 enclosure without plumbing. It's not part of the house. It's not an addition to the house. It's an accessory structure. All throughout the permit documents in this case, we have admissions that they are building in the rear yard. Here's the zoning data sheet where they claim somehow that the setbacks change, that they have a front yard on Falcon Avenue, and that their property was compliant. This was submitted I believe by the architect. Mr. Iler will go through that, but we have throughout these documents, front yard green area facing Esplanade. Proposed addition, being added to the rear of the residence. Existing rear structure to be removed. Existing rear CBS wall to be removed. Existing concrete driveway for four cars at front yard.

These are admissions that they are building within the rear yard. Throughout the plan, we've audited that. You can take the time to review that at your leisure, but you'll see from Mr. Iler's presentation and from his report that it is his expert opinion that what I have described to you is, in fact, the condition that happened here. There is a rear yard setback requirement that Mr. Wells clearly imposed on

this property as a condition to the waiver of plat. And we have deviated from that perhaps it was an error. Perhaps it was a mistake, an honest mistake, whatever it might be, we've deviated from that. And they should be required to return to you in the proper posture, ask for a variance, and if they meet the criteria, then you can grant it. But doing it this way by somehow Erasing history and making it seem as if the front is something else just to get by, is not correct. I'd like to turn it over to Mr. Iler so that he can give his report and presentation. And I think he'd like to go up to the dais as -- to do so.

MR. ILER: Can I say something?

MR. MACHADO: Please. Thank you.

MR. ILER: Absolutely. Thank you, Kris. Good afternoon. Good evening, members of the board.

MS. GONZALEZ: You might want to turn on your mic.

MR. ILER: There we go. Can you hear me?

MS. GONZALEZ: Yes.

HENRY ILER,

having been previously sworn, testified as follows:

DIRECT TESTIMONY

MR. ILER: My name is Henry Iler. I'm president principal of Iler Planning. I believe my

resume is in the -- is in the book that you handed out, but I have 35 years experience in planning and zoning in Miami-Dade County, Palm Beach County, basically Southeast Florida. I worked for Miami-Dade County in my younger years in the 1980s as a principal planner, as a transportation planner, and as a large scale development coordinator for some of the large projects that at that time were happening out on Bird Road and Kendall Drive.

I have a master's in urban planning from Florida State, and a bachelor's from the University of Florida in business and accounting. So I have no problem with a big game. I just kind of choose the one that's favored. I have been retained by the owner of 300 Falcon Avenue, Michelle Ferreira to render a professional finding and zoning opinion with regard to the appropriateness -- the appropriateness of the administrative determination of required setbacks rendered by the Miami stream -- Springs City staff in nine -- in 2022 during issuance of a building permit for an addition being constructed on the adjacent Esplanade property.

As some background, and you probably -- this is going to be a bit of a repeat because he -- there was a very detailed presentation by Kris. I have an

exhibit in my report, which is in the book, which shows basically the current printout from the property appraiser for both of the properties. So it really -- it just shows you where the properties are now, the 200 North Esplanade property, as I've referred to it as the -- as the Esplanade lot and the parcel at 300 Falcon Avenue as the Falcon lot. Now in 1947, a house was built at 200 North Esplanade Drive across two platted lots, highlighted in yellow in the slide that Kris showed, and also in my report. The lots are located in the city's R-1 C single family residential zoning district, and each lot measured 50 feet by 150 feet. And in 1983, '84, the then owner of the Esplanade house filed an application with the city to resubdivide the lots into two lots measuring 75 feet by 100 feet as you saw on the slideshow.

It was determined at the time that this resubdivision could be accomplished by waiver of plat. When the waiver was approved, the Esplanade house was on the resulting corner lot and the other vacant parcel, the Falcon lot, became an in -- became an interior lot located on Falcon Avenue, the Falcon house. Exhibit C -- I have -- I have -- I have an Exhibit C, which is the June 1984 letter from Mr. Wells, the building official, which was shown in the

show as well to the 200 Esplanade property owner listing six requirements for the waiver of plat.

The following requirements are the most relevant to this case. There are two of them. First of all, he said, in one of the six requirements, "The existing Esplanade house must provide the following minimum setbacks, front 30 feet on Esplanade Drive, rear 25 feet, side facing Falcon Avenue 15 feet, and south side of the house, the other side, 10 feet. And two, all encroachments into the setback described above must be removed prior to issuance of the building permit for the new house on the interior of Falcon lot." And we do know that that was done at that time.

After all the -- after all of the conditions of the 1984, waiver of plat were met, the city issued the building permit for the home on the interior Falcon lot, and it was constructed shortly thereafter at 300 Falcon Avenue within the required setbacks at that time.

In December, 2021, the Esplanade house owner at that time and currently filed for a building permit to construct a new addition at the rear of the home. The building plans altered the -- and I'll say the building plans altered the traditional setbacks. And I'll say they -- the ones going back to 1947, of the

Esplanade home to treat the side on Falcon Avenue as the front of the lot, and the former rear yard next to the Falcon property as a side yard requiring only a seven and a half foot setback.

And I'll -- I will say this, I didn't find anything in the file making any kind of determination to change the setbacks either in 1983-4, or 2004, or -- but in those plans in 2022, the architect listed in the zoning data next to the setbacks, that the rear setback was previously approved. And somehow he had -- he had gotten that -- gotten that idea, which was really not the case. There was no document approving those revised setbacks.

A building permit was issued for the addition located 7.68 feet from the Falcon lot. Exhibit D in my -- in my report contains the site plan for the addition with the setback next to the Falcon lot circled in red. That was also one of the lots, but it shows the 7.68 feet. No evidence was found in the record showing a zoning setback variance application was submitted at the time by the owner for the 17.32 foot rear yard encroachment of the new addition.

In addition, no written documentation was prepared by city staff in 2022, recognizing the prior 1984 waiver of plat conditions and providing any

justification as to why the setbacks for the Esplanade house identified and documented in the planning process in 1984 should be changed in 2022.

Onto some relevant facts after all that background. I won't go into this, but the Miami-Dade County Subdivision planning code was first adopted by the County Commission in 1957, and it applies countywide, including all municipalities. It was established to make sure when large parcels are subdivided that certain community planning objectives are accomplished in the process, such as the -- such as the provision of sound development principles, stable communities, healthy living environments, and convenient road system. In 1984, Miami Springs was obligated by the county code to process plats and waiver of plats, and since -- and send them to the county for review and approval. The conditions and requirements associated with any plat or waiver of plat must be adhered to in the development of a parcel.

The city building official, Mr. Wells, in 1984 reviewed the proposed waiver plat and issued the requirements as specified in the letter that I referred to in Exhibit C in my report. The relevant points are summarized below. A little bit of a repeat. Once again, the front step back is to be 30 feet on North

Esplanade Drive, rear yard 25 feet on the Falcon house side. And the side setback from Falcon must be 15 feet, which is a very typical corner setback in any city of Miami-Dade County for the -- for the side.

In 1977, the city adopted code Section 150-002(C)18(e) stating for corner lots, the front -- the lot front shall be the narrowest portion abutting the street, unless determined otherwise by the Planning and zoning director. In 1984, this code -- this code provision was in effect and the building -- and the building official at the time determined in spite of that -- he knew the code provision.

And by the way, that code provision should apply in 90-95 percent of the cases, because that makes the most sense, but on corner lots and in old subdivisions, different things happen. I've seen it many times, and you have to make adjustments. And so the professionals preparing the building plans as you saw in the slideshow also recognize the logical front and rear yards of the house, the electrical plumbing, and other building plans for the Esplanade addition repeatedly refer to the yard adjacent to the Falcon house as the rear yard or rear of the house. It should also be noted the city's issuance of the building permit for the addition in 2022 created two new zoning

setback variances at this location, as you saw on the slideshow, with the yard on Falcon Avenue erroneously shown as the front yard in the permit plans, the required setback would be 30 feet.

However, the permit plans allowed the front setback on Falcon Avenue to be 15.09 feet, approximately 50 -- 50 percent less than the required setback. Also, the permit did allow a rear yard setback of 13.86 feet, which is the south side now, which is 45 percent less than the required rear setback of 25 feet. These variances were listed as existing condition approved by the architect on the addition plan in Exhibit C in my report. And so that's why I said in the zoning data, he has the has the deficient setback shown for front and rear, and he lists pre-existing conditions approved. And there is no written -- and there is no written evidence these are -- the -- these variances were expressly approved for city code. The permit was issued with unapproved setback variances, and an incorrect setback orientation.

In conclusion. The subdivision of land is a basic development tool in Miami-Dade County. Though the waiver request setback requirements for the Esplanade parcel in 1984 by the building official were appropriate based on the history of the parcel and

surrounding orientation of the homes. The Esplanade house was built in 1947 and the front and rear yards were established at that time. The house front was on North Esplanade Drive, and it was addressed on that street. The Postal Service also agrees with this as well.

For 47 years, this was the case until the building permit for the addition in 2022. There is no indication the city staff were aware of the prior 1984 setback requirements, and no written rationale given for changing the setback orientation of the home in 2022. Also, there is no express approval of the new unapproved setback pattern with the front setback erroneously shown on Falcon Avenue with two newly created variances in the front and rear, which were never appropriately addressed.

The new addition is being built or has been built, and the required 20 -- 25 foot rear yard setback for the Esplanade home established in 1947 and verified by the building official in 1984 with a rear setback variance of 17.4 feet, which was never approved by the city council. The 1984 waiver of plat staff requirements reaffirming the rear yard of the Esplanade house as the area adjacent to the Falcon lot and requiring removal of all encroachments into that rear

yard setback was a condition and approval and should be enforced today. In my opinion, the building permit for the addition was issued in error, should be stayed until the -- until the unapproved rear setback deficiency adjacent to the Falcon home can be addressed. Thank you very much.

MR. TALLMAN: Thank you.

MR. MACHADO: I might have some questions for Mr. Iler on rebuttal if there's time for that. But for now I think we're well set. I'd like for Michelle Ferreira to just give a brief statement on how she's affected by this. Just give her viewpoint. I know that emotions can be high when you are asking to have additional process of somebody who's trying to build a house. But we do think that's the proper thing to do. And I'd like for her to speak on how she's been affected by this.

MS. FERREIRA: Did my neighbor make an honest mistake? Did my neighbor knowingly make false representations to gain an unfair advantage? Did the city fail to check its own records before approving the plans and issuing the permit? Did the city knowingly issue a permit intentionally disregarding its own zoning approvals? I have been living in Miami Springs since I bought my home in 2012. I'm here today because

my neighbor was issued a permit to construct an addition that does not comply with our zoning code. The city is supposed to treat us all equally. But instead my neighbor has been granted special privileges by receiving a permit that allows him to construct an addition in his backyard only 7.6 feet away from me. Maybe a little more when you take in the roof overhead. And this is harming me tremendously.

The issuance of this permit by the city also conflicts with the approval conditions that were imposed upon my neighbor's lot when his predecessor sought the city's approval to split our lots in 1984, the city's approval conditions apply to both me and my neighbor as they relate to lots one and two of which we are each one half. The city now wants to suggest that this 1984 approval doesn't count. And that, even though the city made a determination in 1984, over 40 years ago, it can arbitrarily change its mind today. That is absurd.

I'm not allowed to violate the code. None of you are allowed to violate the code. My neighbor should not be allowed to violate the code. And certainly city officials should not be allowed to violate the code. I don't think our code allows the city to change a front yard designation after a waiver

of plat is approved without going through a formal variance process. Allowing this permit to stand would not only create an unfair precedent, but it would also undermine the integrity of officials whose duty it is to ensure that the zoning and permitting process is consistently and objectively applied fairly.

My neighbor's structure is way too close. Don't get me wrong. I'm completely in favor of my neighbor remodeling his house. Over the years, I have renovated my home to improve its aesthetic appearance, but also to bring certain features up to code. Most recently, I started working on plans to completely overhaul my backyard. I started with the removal of an aluminum patio canopy, and I had not realized how much light and air was being blocked by it. And the wood fence installed long before I ever bought my home was desperately in need of replacement. To put in a new fence, I had to remove overgrown arengas also in place when I bought my home that were leaning against the old fence between my and my neighbor's house. With the trees out of the way, I was shocked to see my neighbor was building an addition that I can only describe as intrusive and obnoxious.

I felt exposed. I had planned to continue my backyard, renovation project once the new fence

installed, but with another house on top of me, I couldn't fathom spending that kind of money to be left without any privacy. Even worse, the idea that my only choice was to plant extra tall hedges of some sort just to block the monstrosity of a terrace my neighbor was constructing, and that meant my plans to preserve the light and air went down the drain. My house renovation's plans aside, there are serious life safety concerns. The addition is so close there is an increased risk of fire if my neighbor, for example has a barbecue. And what about lights shining my direction? I also have serious concerns about flooding. The probability of my backyard flooding is high, given the close proximity of the structure to my property line. Where's the water going to go? Especially since that entire area is probably sloping towards me.

I already know there are drainage issues in my backyard, and during heavy rain events I have experienced flooding. I was working on a design that would account for thoughtful landscaping to improve drainage as part of my backyard project that I had planned to continue after I replaced the fence. My dreams to create a backyard oasis are in jeopardy. My home is supposed to be my safe space. And now I have

no peace of mind. I can't imagine living in a place where I have absolutely zero privacy. I can't enjoy my own home. And who on Earth wants to buy a house that is overshadowed by a concrete jungle? No one wants to have that unsightly structure in their backyard.

And what about my property value? It's not deniable that this addition diminishes the value of my property. One of the city's goals is set forth in the code as regulating the platting, replatting, resubdividing, and use of unplatted lands for any of the above purposes in promoting the safety, health, comfort, morals, convenience, peace, prosperity, appearances, or general welfare of the city and its inhabitants. I'm urging you to honor this principle. I'm imploring your -- you to put yourself in my shoes, and ask yourself if this would be acceptable to you if it was your home. I think not.

MR. MACHADO: Thank you, Michelle. We also have some letters from neighbors that are equally concerned by this, and Michelle, do you have those letters with you? I know it's tedious and it takes some time, but I would like to read them into the record just to have them as part of the file in case there is an appeal ultimately.

So the first letter is dated February 19th,

2025. It is from Melissa Bennetti. And this is what it says --

MR. TALLMAN: Counselor, we actually -- we have those actually. They're already a part of the file.

MR. MACHADO: They're part of the file.

MR. TALLMAN: They're part of the record, yeah.

MR. MACHADO: So we have that from Ms. Bennetti --

MR. TALLMAN: I -- yeah. From Ms. Bennetti --

MR. MACHADO: We have one from Mr. Rubio, Antonio Rubio dated no -- 17th of February 2025. You have that on the record?

MR. TALLMAN: Yes, sir.

MR. MACHADO: And we have one from Carlos Velasquez and Zoila Rivera dated February 19th, 2025.

MR. TALLMAN: Okay. We do not have the Velasquez.

MR. MACHADO: I will enter that into the record. I also want to make a note for the record that I delivered at the start of this hearing a binder containing more than a thousand pages of evidence that we have submitted into the record in this file. I just want to make clear that binder both in hard copy and in

PDF has been entered into the record as part of this appeal.

MR. TALLMAN: It would've been helpful to have that in advance so that we could have reviewed it all.

MR. MACHADO: I appreciate that. The -- just to go through the contents of the binder, they basically include the documents that you saw in the presentation. They include public records that we received in response to requests from the city. They also include letters involved in this appeal, and they also include other documentation such as photographs, diagrams, surveys, a variety of materials that I think would be helpful to the city as we process this appeal. Just to review the contents, not the actual writings, but the actual index appeal letters Tab 1. Tab 2 is Mr. Iler's report and opinion, and also his CV. Tab 3 is the Esplanade Building Permit documents. Tab 4 is the property appraiser documents. Tab 5, we have diagrams. Tab 6, surveys. Tab 7, photographs.

Tab 8 is part one of the public records, including the waiver of plat documents. Tab 9, we have public records Part II. Tab 10, we have the diagram showing the admissions as to the fact that they're building into the rear yard. All the plans are included in that tab. Tab 11 is the Zoning Map. Tab

12 are pertinent Miami Springs Code sections. Tab 13 is Ordinance 184. Tab 14 is ordinance 599-77. Tab 15 ordinance is 287 and 750-89. Tab 16 is a site plan for 300 Falcon showing where it was built. Tab 17 is an email from the City Clerk's Office affirming no variances have been filed or granted in this application. Tab 18 is the Florida Planning Officials Handbook, and Tab 19 are documents relating to Mr. Chris Hyde (phonetic), who was the zoning reviewer for this application. Thank you.

MR. TALLMAN: Thank you.

MR. MACHADO: So with that said I'd like to save time for rebuttal, for rebuttal case, if we need to. I might have questions for the city's witnesses, but I'd like to just sum it up by saying the documents show it's a rear yard. The improvements were built into a rear yard. There should be a variance. That's a process the city has on its books, make them come back, ask for a variance. If they meet the criteria, you can grant it. We can deal with it then. But that's what has to happen in this case. We're not asking for anything more than for the procedure to be followed so that we can have an actual process with due process with a hearing, not in this posture where we're trying to correct an error, but in a posture where the

city can actually grant a permit that would be valid. The alternative legally, and we can discuss this at the right time is to sue -- to enjoin the project to enforce demolition, which I don't think anybody wants us to go through. It's much easier to have an actual variance process where we can present evidence and argue the merits of that application. Thank you.

MR. TALLMAN: Thank you, Mr. Machado.

MR. URIBE: Thank you. Good evening. My name's Alex Uribe, an attorney on behalf of the city. And I guess I'd like to start just very briefly since Mr. Iler has already presented his testimony, I would just like to ask a couple questions. Just -- I don't even think they're going to be too much as cross-exam, but just to -- just to establish a couple things, if I could.

CROSS-EXAMINATION

BY MR. URIBE:

Q. Mr. Iler, have you reviewed the setback that exists from your client's property to the property line shared with 200 North Esplanade?

A. No, I have not.

Q. Okay. So you don't know what her setback to the property that she's appealing, you don't know what that setback is?

A. Correct.

Q. Okay. Okay. Let me ask you about the -- have you reviewed the five foot accessory setback that Mr. Machado was mentioning about the old structure? You remember when we were talking -- he was talking about the demolition, the partial demolition that they took off a certain part and left the small step back?

A. Yes.

Q. Okay. That's a five-foot accessory structure, you said, right? A five foot accessory structure set back, right?

A. But that is a standard for accessory structure in the code.

Q. Okay. Let me ask you, is that setback, is that required only a rear yard or could that have been a setback -- the accessory yard, the accessory building setback to a side yard line? To the side yard property line?

A. You can have an accessory building on -- on the side or the rear.

Q. Right. And it would still be those same five feet, right?

A. I -- I don't know. I -- I haven't reviewed the code and seen if it was specific to rear side, so I -- I can't say.

Q. Okay. Understood. And let me ask you does the -- does the code require -- if you've read Section 150-002(C)18(e), which provides that the planning and zoning director has the ability to be determine where the front of the lot is located, correct?

A. Yes.

Q. Okay. I guess my first question is that section doesn't say anything about front yard, does it?

A. Based on my memory, no, but I'd have to go back and look at it to have a definition -- opinion.

Q. And let me ask you, does that section also require that the planning and zoning director, if he were to make the determination, and if that included the power to move to change the location of the front yard on a corner house from one to the other, is there anything in there that says that he would have to make it in writing and have to put it down there?

A. No -- no. It just says he has to make a determination.

Q. Make a determination. And is there anything prohibiting the planning and zoning director from later making a different determination? Let's say down the line, somebody comes in with a new plan?

A. No.

MR. URIBE: Thank you. I think that's all I

have for now.

MR. MACHADO: Just a few questions for Mr. Iler redirect.

REDIRECT EXAMINATION

BY MR. MACHADO:

Q. Mr. Iler, given the history reviewed together about this property, do you think it would be reasonable for Mr. Wells to have documented his requirements and conditions of the plat approval in various letters and then disregarded all those letters and reconsidered his decision without putting it in writing?

A. No.

Q. Is that something that you see typically happen in the planning process as an expert planner?

A. No. Given that the documents and the findings were so close together in time.

Q. And if we could walk through together, if we could put the PowerPoint back on, and take a look at the survey of the property back in the 1980s -- I can click through it quickly.

So you see this diagram that shows the 25 feet highlighted?

A. Yes.

Q. Do you see any improvements in the -- any

accessory improvements other than in the rear yard setback area?

A. No. I just see that one. That one building.

Q. And so when Mr. Wells said that the property cannot create nonconformities and must adhere to the setback requirements, do you think it's reasonable for Mr. Wells to have approved a permit that creates nonconformities as part of a waiver of plat, or would it be more reasonable to approve a plan that does not create nonconformance?

A. I think he's under -- he's under obligation to seek a plan that does not create noncomformance.

Q. And in terms of your experience with Florida planning principles, we see here, the section of the city code in effect today about non-conforming structures that were erected, converted or structurally altered in violation of the provision of this ordinance, which this chapter should proceed, shall not be validated by the adoption of this chapter.

Is it your opinion as an expert planner that nonconformities are disfavored?

A. Oh, yes. Definitely. Yeah. City codes are always trying to correct them as best they can.

Q. And so just to confirm, it would not be consistent with proper planning principles for Mr.

Wells to have approved a subdivision that created nonconformities?

A. Correct, in my opinion.

MR. MACHADO: Thank you.

MR. URIBE: I got one follow -- well, one line of follow-up questions just for a second.

RECROSS-EXAMINATION

BY MR. URIBE:

Q. Mr. Iler, I've just handed you a document. Do you see it?

A. Yes.

Q. Do you see that this document, if you're looking at it on the left-hand side, read -- reading down says certified to be a true copy, waiver of plat executed Miami Springs City Hall 201 Westward Drive, Miami Springs, Florida, and then signed by the Deputy City Clerk?

A. Yes.

Q. Okay. You see on the upper right corner where there's a space that was written in handwriting, it says, "Boundary Survey," and right underneath that, it says, "Waiver of plat approved"? I'm going to give you a minute just to read this document over, and I want to know if the conditions that were mentioned in the letter from 1984 are actually incorporated here on this

document, which says, and is sealed, and is certified to be the waiver of plat for this property?

A. I believe that -- that CBS structure in the back in the rear should -- was partially -- partially demolished.

Q. It was partially demolished. But what I'm asking is are the conditions that the -- building official David Wells mentioned in his letter, are those incorporated on this -- are they -- are they stated on this document?

A. No, I don't think so. Because he specified the demolition to provide at least a 5-foot setback.

MR. URIBE: Understood. Okay. Thank you. That's all.

MR. MACHADO: Just going back one second. I'm sorry. I have to click through this multiple times. But let's get to the right page first.

FURTHER REDIRECT EXAMINATION

BY MR. MACHADO:

Q. So Mr. Iler, do you believe in your opinion that the letters that Mr. Wells issued with those setback requirements and the statement that the lot split cannot create nonconformities are part of the waiver of plat file?

A. Yes.

Q. And would you, in your expert opinion, believe that somebody looking at the entire file in conjunction with the document that the city attorney sent you, would naturally conclude that the conditions that were imposed as part of Mr. Wells' letters of applied to the waiver of plat that was dated August 13th of 1984?

A. Yes.

Q. And is that consistent with the timeline that we have shown on this slide where the letters were issued between '83 and '84, there was a demo permit in September of '84, and then there was that final letter that we see here from the building official saying the subdivision has now been achieved? Is that timeline consistent with your opinion that the conditions that were imposed in the letter remained applicable to this waiver of plat?

A. Yes.

MR. MACHADO: Thank you, sir.

MR. URIBE: I don't have anything further. I'd like to call just to get started on my side. I would like to call the city's witnesses, and I'm going to start with Ms. Silvia Vargas, the city planner.

MR. MACHADO: I'm happy -- we're going to have to share a microphone.

MS. VARGAS: I'm sorry. My seat is warm now,

and it's really cold.

MR. URIBE: So I want to make sure the microphone gets us both.

MS. VARGAS: Can you hear me okay?

MR. URIBE: Yes. How about now? Can you hear me?

MR. TALLMAN: Yes.

MS. VARGAS: Can you hear me?

MR. TALLMAN: Yes.

MS. VARGAS: Okay.

SILVIA VARGAS,

having been previously sworn, testified as follows:

DIRECT EXAMINATION

BY MR. URIBE:

Q. Please state your name.

A. My name is Silvia Vargas.

Q. Ms. Vargas, what is your profession?

A. I am an urban planner.

Q. Okay. And what does that mean?

A. It means that I am trained in a land use and zoning and long range planning for the planning -- long range planning and short term planning -- I'm sorry, short range planning, for communities of all kinds. And I work both in -- in the short range and long range with a variety of communities right now across Miami-

Dade County. If you want to speak more about my record experience, I can.

Q. Do you -- do you have any qualifications or special certifications? Can you tell me about those, please?

A. Sure. I have bachelor in architectural studies and a master in Urban Planning. I also have -- I am a certified planner from the American Institute of Certified Planners. I also am a fellow of the American Institute of Certified Planners, which means that I have been granted the highest honor of our profession for contributions to the profession over time, over a 32-year career. So --

Q. You're taking all my questions.

A. I'm sorry.

Q. Okay. What's your role with the city of Miami Springs?

A. Currently, I serve as the city planner.

Q. Great. And how long have you been serving as the city planner?

A. It's going to be two years in May of this year.

Q. Now, have you reviewed Miami Springs City code Section 150-002(C)(85)?

A. Yes.

Q. And does that section govern the location of the front yard when the property is a corner property, like at 200 North Esplanade Drive?

A. Yes.

Q. And where does that section require the front yard to be located?

A. Along the narrowest dimension of the lot, correct? The narrowest dimension.

Q. So the narrowest dimension, does that mean against the street that is the shortest frontage --

A. The shortest frontage.

Q. -- on the corner of the two streets forming the corner; is that correct?

A. Correct.

Q. Okay. Now, does that section of the code provide any flexibility for you or someone else to determine differently where that front yard is going to be in relation to the shorter or longer street?

A. No. No leeway.

Q. Okay. Now how does the code determine where the rear yard is?

A. That would be the next definition, which is Number 86, which provides that it is the -- the rear yard is the farthest opposite to the front yard.

Q. Okay. And the side yards?

A. Would be, you know, parallel to the building from the front to the rear or vice versa.

Q. Okay. Now, have you seen the 1984 letter from Mr. Wells to the property owner, the June 20th, 1984 letter from Mr. Wells to the property --

A. Yes.

Q. -- owner?

A. Yes.

Q. Okay. And that letter, it states that a 25-foot rear setback and that the structures would need to be removed in order to allow the original lot to be split, correct?

A. Yes.

Q. And that letter also advised that the new building permit for the appellant's -- now the appellant's home -- would not be issued until the required setbacks, including a rear setback to the appellant's property, was provided, correct?

A. Correct.

Q. Okay. Have you seen the November 27th letter from Mr. Wells advising that as of that -- November 27th, 1984 letter from Mr. Wells advising that as of that date, the setbacks were met and the city would approve construction of the new home on -- at 300 Falcon Avenue?

A. Yes.
Q. And you've seen the waiver of plat that has the accepted date of August 13th, 1984?
A. Yes.
Q. Do you see any conditions from the letter on that document?
A. No.
Q. Have you seen attached sketches, which date from later permits at 200 North Esplanade Drive?
A. I'm sorry. Attached sketches?
Q. Sorry. The sketches attached to permits from later at 200 North Esplanade Drive.
A. Yes.
Q. Okay. Can you -- if we look at the original waiver of plat for the survey for the sketch that it has on there, can you see the size of the one-story CVS building here?
A. Yes. Yes.
Q. What -- what's the side -- what's the width there?
A. The -- the south side looks to be 20 feet 03.
Q. Okay.
A. And the east -- I don't know. What is that? The -- that one I can't read very well, but it's 10.8 I think, or 8.9.

Q. Yeah, that's the other dimension. Okay. Okay. Okay. And now if I show you -- one second.

If I show you the sketch from the 2004 permit addition, can you see that sketch what it shows that CBS structure -- what the width of that CVS structure now be -- now is?

A. It -- this one is really hard to see, but I believe that to be 14.75.

Q. Thank you.

A. Yeah.

Q. Okay.

Are You familiar with permit number 040000686?

A. I reviewed it for the purposes of this process.

Q. Was that a permit issued for an addition to the house at 200 North Esplanade Drive?

A. Yes.

Q. Was this addition located in the same general vicinity as the new addition that is in permit RES 211143?

A. Generally, yes.

Q. Based on the location of the 2004 addition and the new addition, would it be fair to say that the city has treated that area as a side yard?

A. For the purposes of those permits, it would

not have been possible if they have not been considered the side yard.

Q. Thank you. And I know that this is all a bit abstract without my presentation on there. I just want to establish these answers, and then we're going to go through them and we're going to look at it, okay?

Have you reviewed any other properties that were also created through a waiver of plat similar to the waiver of Plat that happened here at 300 Falcon and 200 North Esplanade?

A. Reviewed for the purpose of permits or --

Q. No, just reviewed their configurations.

A. I have seen some instances of that. Yes.

MR. URIBE: Let me ask -- you know what? I'm going to reserve my questions to the end, I think. Actually, they're going to be better served if I do them at the end. I'm going to reserve my next questions to the end then.

Can I get my PowerPoint on there?

MS. GONZALEZ: We can move it --

MR. URIBE: Yeah. I am not used to -- I am not used to presenting sitting down, but I will -- I'll do my best.

MS. SERA: You can move.

MR. URIBE: Oh, that's okay. That's okay.

No, I'll be fine here.

So Board Members, again, Alejandro Uribe on behalf of the City of Miami Spring staff. We would ask that the board recommend upholding the correct decision of the prior city planner in denial of this appeal. The city's treatment of the setback between 200 North Esplanade Drive and 300 Falcon Avenue as a side yard in connection with permit RES 211143 is consistent with what the city code requires and with how the property has been treated historically.

The applicant is relying on a 40-year-old advisory letter, which has been superseded in practice for at least the last 21 years, maybe more. So the applicant is asking that the city determine that her rear yard is what abuts her property. In order to establish where the rear yard is located, we need to look at the definitions in the code. Section 150-002(C)85, which governs front yards says, "On corner lots, the front yard shall be considered as adjacent to the street upon which the lot has its least dimension." That's a shall, okay. That's imperative. No flexibility.

Code provides no flexibility there to any official to change where the front yard is on a corner lot. Section 150-002(C)86 provides that "the rear yard

is located opposite and most distant from the front yard." Again, no flexibility for any official to change this. All right. So on a corner lot, the yard is going to be located along the street where it has the narrowest frontage land, the rear yard will be opposite of that.

Now, a lot of this is going to be somewhat repeated, and I -- and I appreciate Kris having done a very good job in the whole background of it. And so I'm going to try and keep it brief to not waste every, you know -- keep this going longer. Before the waiver plat split the two current properties, the 100 by 150 foot property had 150 feet of frontage on Falcon Avenue and 100 feet on Esplanade Drive. The house that currently exists on 200 Esplanade, like Kris said, was built in or around 1947. And it was built with the front naturally facing Esplanade Drive because at the time, Esplanade Drive was the shorter, narrower of the two streets that fronted that joint property.

Okay. However, once the waiver of plat created two current lots -- the two current lots in 1984 -- the corner lot's narrowest frontage became the 75 feet on Falcon Avenue. Esplanade Drive is now the longer frontage with 100 feet versus 75 feet. Okay. Therefore, under Section 150-002(C)85, the front yard

of 200 North Esplanade shall be located along Falcon Avenue, not along Esplanade Drive. This survey, which is also you can see is taken from the waiver of plat is put here so you can see what the dimensions -- see very clearly what the dimensions are of the new corner lot.

Now, the appellant argues that an advisory letter dated June 20th, 1984, by then building official, David Wells, established that, contrary to Section 150-002(C)85, the front yard would not be along the street with the least dimension, but rather remain on the longer street, Esplanade Drive. This would give the appellant a much deeper, 25-foot rear setback against her property since her property is located opposite the side of the corner lot facing Esplanade Drive. Let's look at the letter.

In their appeal, the appellant tries to characterize this letter as part of the waiver of plat approval. It is not the approval. This letter is merely an advisory. It comes two months before the waiver of plat approval and says, hey, if you want to do this, if you have any interest in doing it, here's what you should do.

Now, here are the actual city certified waiver of plat documents, which were approved by Mr. Wells on August 13th, 1984. These contain none of the

restrictions or conditions provided in the letter. So in the -- so the information in the letter is not in any way part of or a condition to the actual waiver of plat. That's because the waiver of plat -- the only thing that the waiver of plat does legally is establish where -- what are the property dimensions and whether you can recognize a piece of land as a buildable site.

Oh, excuse me. Kind of slow. Okay. Sorry.

The letter advises that "the front setback of the corner lot must be provided along Esplanade Drive and thus the rear setback must be provided towards the appellant's property". The letter says that the -- "that a building permit to construct the new house at 300 Falcon Avenue" -- now the appellant's home -- "will not be issued until all encroachments into the setback have been removed." Fine. I think we agreed on that point.

Now, the appellant included a sketch with their appeal from the city's records that shows where the setbacks would be if the rear yard were facing the appellant's property. And you've seen this one before. Mr. Machado relied on it rather heavily. It's clear here that this would -- you would demolish this. There's a question mark on the entire accessory building there, right? And it would have to be

demolished to meet the 25-foot rear setback, but there's more to the story. Okay.

This sketch is actually only one of two possible scenarios contemplated at the city -- by the city at the time. We go here. We have a different sketch, and that sketch shows a different scenario -- a different setback configuration that could work. This,, by the way is from the city's records exactly where Mr. Machado obtained the document he was shown. Okay. This shows a setback on Falcon Avenue and only a side setback to the appellant's home. Now, how do we know? You see the A that's right there listed on that line? The next document in the city records that came with this is this: A) building line of old house. Okay. That means if we go back here, that would be the setback line if you were to apply Falcon Avenue as the front of this house. Okay.

Now, which one of these -- of these two did Mr. Wells ultimately approve? We don't know. We don't have what Mr. Wells did after this. But what we can confirm is that, despite what was stated on the June 20th and the previous letters, the building official ultimately accepted these setbacks, right. Let's look at the accessory building and the removal of the encroachments. Mr. Machado showed you this, so I

appreciate that he showed you this and that you're already familiar. You can see that the one-story CVS structure there was at a one to 1.35 setback and was 20 feet wide as our planner has testified or has confirmed. Okay. And so if you were to give the full 25-foot setback as the letter said, you would have to knock this whole thing down, right.

On or around September 7th, 1984, the owner of the corner lot was issued a partial demolition of accessory building. Important that it is not a total demolition, right. So -- and this was signed again by David Wells, the same person who issued the letter. Now, unlike what the appellant stated in their appeal letter, and it seems that their theory may have morphed a little bit or evolved a little bit -- as it evolved a little bit since they filed their appeal. The demolition did not remove the entire accessory building. It removed about 5.3 feet of it and left a small setback consistent with the second sketch that I sent -- the second setback scenario. The evidence of the partial demolition is found in later microfilm, which clearly shows the building reduced in width from 20 feet to 14.7 feet. Okay.

Now November 27th, 1984, Mr. Wells issued a new letter, which states "The permit for the new home

can now be issued and all zoning requirements and regulations have been met." So Mr. Wells accepted the partial demolition, and we move on. After this, the appellant's home received a permit also signed by the official, Mr. Wells, for construction, January 8th, 1985. If you recall, the June 20th, 1984 letter, Mr. Wells said he would not issue a permit for the new home if the setbacks from 200 North Esplanade were not provided, but clearly he accepted the second sketch.

Here's an aerial photo of the appellant's home under construction. And I'm sorry, that the aerial photo quality is not great on this one, but I wanted to show it to you because it shows the construction. But you can see that the building is still there on the 200 North Esplanade home. It's been reduced a little bit. You can -- it's hard to kind of tell, but it's there. Here's a clearer picture from '91 and a clearer one still.

Okay. There we go. Okay. Clearly, that building was not demolished and 25 feet have never been provided as the rear setback between Ms. Ferreira's house and the house at 200 North Esplanade. Okay.

Now what ended up happening later on might even be more important. All of this, it could go either way as Mr. Machado said. That could be just the

accessory building setback, right, that just needed to be left there, but it could also have been that they adopted the side setback. That doesn't matter, because as we move forward in time, we confirm, without a doubt, that the city has been treating the front of this property as Falcon Avenue.

Moving forward in time, we come to the 2004 addition to the North Esplanade home. This permit was reviewed and issued under Permit number 0400000686. Now, this is the detail from the permit plans. The plans call for a "permanent insulated enclosed screen room with a three inch insulated aluminum roof supported by columns rising from a concrete slab", which itself was approved under a separate Permit number 0400000606. Now this addition, and if you look at the very end over there, it shows 11 feet 6 inches is the projection from the main house toward the appellant's home. This addition is required to respect all setbacks.

Here you can see the plan that -- the site plan that was provided with this permit. You can see that this area projects into the area that would be or that the appellant claims is her rear yard. It actually says 12 feet on this drawing. We don't know if it's 12 or 11 feet, but it's -- or 11 and a half

feet, but it's in that vicinity. Okay. The important part of this is, this would not have been allowed. And you can see -- by the way, it's cut off, but you can see on the bottom right that it has a city approval stamp. This would not have been approved if this were considered a rear yard. There is no way it could have been approved without a variance. And as Mr. Machado said, there is no variance in the -- in the record. Okay.

So to show you what it looked like, here is 2003. You can see the appellant's property. You can see the 200 North Esplanade property. You see that there's an empty space there. Obviously, the accessory building is still there, but we move to 2005 and all of a sudden, there's the addition. Okay. You can see it a little more clearly here. And on Google Earth, we can measure a setback of roughly 13 feet between it and the fence separating the appellant's property from 200 North Esplanade, consistent with the permit drawings and what was approved.

What this shows is that in approving the 2004 addition, the front yard had to have been along Falcon Avenue, allowing this area to be a side yard, because a side yard must be located between the front and the rear yard. The side yard only needs to provide 10

percent of the lot width. At 75 feet of lot width, that's seven and a half feet. The 2004, addition 13 -- 13 and change provided setback meets the minimum side yard requirements, but it would not meet a rear yard setback.

Here's an angled view of that addition and how it was originally approved. Okay. Obviously, the appellant's property is there in the foreground. This setback condition has existed from 2004 until the current construction, which has replaced it. This is a 2021 aerial photograph. So since 2004, the city made the call that this property had to have its front on Falcon Avenue. Okay. Now let's move forward here to the -- can we [turn off the lights? It's hard to see, but, okay. Thank you.

We're now looking at the site plan for permit RES 211143 that the appellant is appealing. This addition includes the space where the 2004 addition was. If you -- if we can look in there, and you can see that it says, "remove existing structure and proposed addition". This new structure does project a little bit further towards the appellant's home than the 2004 structure. However, you can see there that it provides 7.68 feet, which is allowed if the side setback required is 7.5 feet. Okay.

In his review of the -- of this permit in 2021 to 2022, then city planner, Chris Hyde, applied the code correctly and applied it in the same manner as the city had done in 2004, which located the front along Falcon Avenue, which is the narrower fronting street on this corner. That's what the code requires. That's what Chris Hyde did. Thus the area between the new addition and the appellant's property is a side yard. Okay.

The city did not make a mistake. However, as Mr. Machado alluded to, and frankly, I think he's right, the architect is kind of sloppy. He's putting front over here and calling this the front yard and calling that the side and calling that doesn't matter, though. What matters is what setbacks were applied and do they comply with what the code demands. And this complies with what the code demands, and it complies with how this property's been treated since at least 2004 and possibly back in 1984. Okay. And I want to address some of the arguments that the appellant has raised. Okay.

Okay. There. The appellant argues that Section 150-002(C)18(e) gave the building official at the time of the June 20th, 1984 letter, the authority to determine that the front yard of 200 Esplanade Drive

would be on Esplanade Drive. As you can see, that's not what the code says for front yards in Section 150-002)c)85. As staff notes in her report, the city disagrees with that interpretation. Section 150-002(C)18(e) provides flexibility for the planning and zoning director to change the front of the lot on corner properties. However, that section does not include front yards within the flexibility that it grants the planning and zoning director. Front yards are regulated only under Section 150-002(C)85. The front yard specific section provides "a front yard shall be considered as adjacent to the street upon which the lot has its least dimension". Period. No flexibility for the director or anyone else to change the location of the front yard on a corner property. But for argument's sake, I'm going to play the applicant's scenario out because even if the applicant is correct on that point, it still does not produce the outcome that the applicant seeks.

So let's assume that Section 150-002(C)18(e) grants Mr. Wells the ability to establish that the front yard for 200 Esplanade Drive was on Esplanade Drive in 1984. Does that determination last forever? No. Does any code language prevent that same director or a later director from changing that determination in

the event that a change is made to the property? Do we always have to look at it through the lens of what one person determined forever? No. There's nothing in that section that says that that has to be forever. If a new addition or a new house were to be proposed on that property, there's no reason why the director, in reviewing new plans, couldn't use the same authority that he had to make the determination in 1984, which is what the appellant rests their argument on, could have used that same authority to later on change the front yard location to Falcon if he hadn't really changed it to Esplanade back then anyway.

Now, if the director is not allowed to determine the front yard is along Falcon Avenue, then let's look at what happens to this small two bedroom one bathroom house at 200 North Esplanade. It would never be able to make any meaningful expansion. At most, it could expand five feet toward Esplanade Drive in some parts. You can see it is shaded in blue. And it could expand three feet further south because it needs a 10-foot side yard setback because this is now a 100-foot wide yard -- a 100-foot wide lot. Excuse me.

This situation would only ever benefit one person, and that's the appellant who wants to enjoy a deep rear setback against her property at the expense

of 200 North Esplanade Drive. But that's not the case, because whether by strict adhesion to the code which says you can't move the front yard. Or through the reasoning of a subsequent planner, if they had the authority, the city recognized the front yard as being Falcon Avenue since at least 2004, when it approved the 2004 addition.

And this touches upon a point that the applicant makes in his letter about administrative finality. I'm actually -- I'm not -- since he didn't mention it, I'm not going to go through with it here, but I have some case law that just says that administrative finale does not apply when you have a change in circumstances. So if that house had been left alone and the director validly changed the front yard area, then perhaps, yes, you wouldn't be able to change it. But once you start changing things, once you make additions, once you change the plan, there's nothing here that stops the director from making a new change -- from changing their determination.

Something else I want to address. The appellant argues that the June 20th, 1984 letter constitutes approval or express conditions of approval of the waiver of flat and that, therefore, any deviation from the conditions would require city

council approval per Section 150-020, and that's that waiver of plats today would have to go through council for approval. That's totally incorrect because the determination of the front yard is not actually part of the waiver of plat approval. And the appellant's own argument rests on the fact that the decision as to where the front yard is going to be lies with the planning and zoning director, not the city council. The code says, if we accept what they're saying, that the planning and zoning director can change it. You don't need to go to the city council for that. Again, the waiver of plat did not include those conditions on its face. And if you want to believe the appellant, it is the planning and zoning director who has the ability to change the front law -- the front yard. You don't need to go to the council. Okay.

I also have to make a note at the timing of this appeal, because even if the applicant were correct, even if the city had made a mistake, there's an issue of whether she can bring it up so late in the process. The permit that the appellant is complaining about was approved in 2022. It was approved by Wright and no notice was given, but the appellant had actual notice. She lives right next door and can see that this house has been under construction since 2022.

This is an aerial photograph dated January of 2023. It clearly shows the roof trusses installed and thus where the footprints and setbacks for the new addition would be located. Yet, she didn't file this appeal until November of 2024. That's close to two years after this photo.

Now here's a photo from March 2024. Even as more time has passed and more work has completed, the appellant still did nothing for months after this photo was taken. All in all, for more than two years she's watched from next door as this owner has progressed with the major renovations to the house. She said nothing.

Now, even if the appellant were right and the city had made a mistake, would it be fair to allow her to make this complaint now? What kind of precedent does that set for the city? How many years back are we going to allow neighbors to come in and challenge building permits? This appeal is simply not timely. The appellant sat on whatever rights she had to challenge this permit and chose to do nothing until years after she knew or should have known what the setbacks were. The only reason we're here tonight is because the city code does not provide an express time limit for appealing administrative decisions. However,

you should hold common sense and that the city does not intend to allow open-ended timeframes to challenge administrative decisions. These challenges should be limited to a reasonable time to file an appeal. What that is, we can debate, but I would say that that is not two years and after all this construction has gone on.

I also want to note that the 2004 edition would show that the city applied a side setback toward the applicant's property. Predates the applicant's ownership of her home. There is no evidence showing that she or any other prior owner ever challenged the side setback then. And for the entire time that the appellant has owned her home, she has enjoyed the side yard setback, not a rear yard.

Finally, I want to point out some comparable situations elsewhere in Miami Springs to show how similar properties have been treated by the city. We looked at five similarly situated properties where one large corner lot was split with a waiver of plat or through a formal plat into an interior lot and a corner lot.

In every one of these cases, the configuration is the same as what was determined here with this permit. The corner lot's front yard is located on the

narrower street frontage. This means that toward the new interior lot, like the appellant, it is only a side setback. Here you have 90910 Quail Avenue. You see the corner has the front towards the narrower dimension street, and it gives the next door neighbor a side yard.

Here is 90910 Pinecrest Drive. Again, this was a waiver of plat. Again, the front is along the narrower dimension, and the side yard is given to the other property created through the waiver of plat. 501 and 517 Palmetto Drive -- again, side yard toward the other property created in the waiver of plat. The front is always towards the narrower street frontage. 901 and 903 Dove Avenue -- this one was actually done by a plat, but again -- by the way, and this one has another driveway off of the other street, but still the front setback -- the 30-feet front setback is toward the narrower dimension street, and the property next door gets a side. 1101 and 1105 Bluebird Avenue -- same thing.

All of these properties have the front setback on the narrowest dimension. All of them have their side setback facing their next door neighbor created from the waiver of plat. And at the end of the day, whether you believe that the code fixes the location of

the front yard along Falcon Avenue, like staff believes, or whether you believe that the director can change the location of the front yard as the appellant would need in order to have the 1984 letter be valid, the fact is that the city has held the front yard to be at Falcon Avenue without question for at least 21 years. It has allowed the 2004 addition to be built and allowed the 2022 permit to be approved.

What this appellant is asking you to do is to throw that all away at the expense of her neighbor so she can be gifted a 25-foot setback against her property. No other similarly situated property elsewhere in the city gets the same setback treatment that she's asking for. She's asking that it come at the expense of her neighbors who have watched -- who she has watched for two years spend significant amounts of money renovating their home.

What the appellant is entitled to is a side setback just like everyone else. That's what her property has received over all these years. There's no basis for changing that. That is what the current permit provides. So on behalf of city staff, we ask that you uphold the correct decision of the planning of the city planner that the front yard of the corner property is located along Falcon Avenue as mandated by

the code, deny this appeal.

And I'm going to go ahead and enter for the record copies of the case law, which I think touch upon some of the points that are relevant in this case. Thank you very much.

And I'm going to go ahead and also continue my questioning of my witnesses.

MR. MACHADO: Well, I have some cross. We can leave it for later or we can do it --

MR. URIBE: I -- I'm going to -- I'm going to finish -- let me finish with the building official and we can go there.

MR. MACHADO: Sure.

MR. TALLMAN: Can we get the lights?

MR. URIBE: I -- I'm going to -- I'm going to -- I'm going to finish with -- I -- I've got one more -- a couple questions for Silvia, and that's it. Actually, I'm going to go ahead and skip that. I'm going to have Ulises, please.

Ulises, you want to go over there?

MR. U. FERNANDEZ: Yep. Where again?

ULISES FERNANDEZ,

having been previously sworn, testified as follows:

DIRECT EXAMINATION

BY MR. URIBE:

Q. Please state your name.
A. Ulises Fernandez.
Q. And what is your position with the city of Miami Springs?
A. I'm the current building official.
Q. How long have you been the building official for Miami Springs?
A. In May, it's going to be ten years.
Q. Okay. Do you have any special training or licensing in the building and construction industry?
A. Over 20 years as a general contractor.
Q. Okay. Are you aware of the Permit RES 211143 issued by the city?
A. Yes.
Q. What date was it issued?
A. '22 -- 2022, I believe.
Q. Okay. Have you seen -- now, have you seen the permit B-415 for the partial demolition of the accessory building?
A. Yes, I have.
Q. And have you seen the waiver of plat document for 200 North Esplanade?
A. Yes, I have. I'm not a zoning expert, but yes, I have seen it.
Q. Let me go ahead and show that.

A. Yeah.
Q. So you've seen Permit B-415 for the partial demolition of the accessory building?
A. Yes.
Q. Have you seen the waiver of plat document for 200 North Esplanade?
A. Yes.
Q. Okay. You've seen the sketch of survey for 200 North Esplanade, which appears in the files of the subsequent permits for that property?
A. Uh-huh. Yes.
Q. Can you see the accessory building on the waiver of plat document?
A. Yes, I do. I see it right here.
Q. Can you see the width dimension there?
A. 20.032, I believe.
Q. Can you see the accessory building on the later sketch of survey?
A. Yes.
Q. Okay. Can you see the width there?
A. 14.75, I'm guessing -- 70?
Q. Would that be consistent with a partial demolition permit?
A. Yes, of course.
Q. Now, are you familiar with Permit 040000686?

A. Is that the screened room?
Q. Yes.
A. Yes.
Q. What did that permit approve?
A. An addition to -- to the -- to the house. Basically, it was an aluminum roof and a screened in -- it's a -- you could call it a screened room or -- or sun room.
Q. Was that insulated, that structure?
A. Yes, it was.
Q. Would you consider this to be an addition to the main house?
A. Yes, of course.
Q. Do additions like this require building permits?
A. Absolutely. Yeah.
Q. So it would have come and been reviewed for zoning?
A. Zoning first and then building.
Q. Okay. Would this type of addition be treated similarly as any other addition to a house?
A. I don't see why not.
MR. URIBE: Thank you very much. No further questions.
MR. MACHADO: I have some cross.

THE WITNESS: Sure. Yeah.

CROSS-EXAMINATION

BY MR. MACHADO:

Q. Mr. Fernandez, are you aware that the building permit for that sunroom describes it as being a rear yard accessory structure?

A. Yeah. I mean, a lot of times architects will have different terminology than zoning.

Q. Was that document prepared by an architect or by the city?

A. It was prepared by an engineer, which -- which has less knowledge of that.

Q. With the -- with the city or with the applicant?

A. The applicant brought it to us, and it was, I believe, signed and sealed by Rams (phonetic) Engineering.

Q. I think we're confused here. Can you please put my presentation back on, and we can flip to the slide that has the actual building permit on it.

MR. URIBE: I got the permit here if you want.

THE WITNESS: For the screen?

BY MR. MACHADO:

Q. I prefer on the screen. Yes.

A. Yeah, it was done by Rams Engineering.

MR. MACHADO: Yeah. Let's go back and if I could have the --

MR. URIBE: Oh, sorry, Kris.

MR. MACHADO: You can go all the way down to the building. Well --

BY MR. MACHADO:

Q. Okay. Here we are, sir. Building Permit B-415. This document that I'm sharing on the screen is entitled City of Miami Springs, Florida Building Permit Application dated September 17th, 1984, Permit number B-415. Do you see that?

A. Yes.

Q. And you see that it says, rear yard structures to provide setbacks?

A. Yes.

Q. So you agree that this is for a rear yard partial demolition?

A. They may have said that, but I don't know what the interpretation -- sometimes -- let me -- can I ask you a question? Okay. Sometimes Silvia and I may disagree on verbiage because architects think differently than zoning experts. So what she may say -- what she may say, the -- for example, the front door. Architects will -- when they deal with their client, they'll say the rear addition, just because the front

door is on -- on a particular side of the house. Just because it says rear addition doesn't mean that it's on the rear of the house. Okay. But just it makes it -- it makes it basically -- the architects are not just doing the plans for the city. They're doing the plans for the home owner. So this -- there sometimes there's different terminology, but go ahead.

MR. URIBE: On the screen, it says rear.

BY MR. MACHADO:

Q. It says rear.

A. Yeah.

Q. Okay. So moving on to the screen addition. Clicker is frustrating. Oh, boy. It doesn't want to cooperate. We'll get -- make it work. Okay. Building Permit 04-0686, this document on the screen, City of Miami Springs Building Permit Application 04-0686, April 20th of 2004 -- was this document prepared by the city?

A. Which document? What --

Q. The one that I'm showing you on the screen.

A. Okay. It -- it -- that -- that's -- that question is a little bit -- I -- I work in the building department. I've been there for a lot -- you know, I've been doing this work for 20 years, so I worked in other cities before. Sometimes the applicant will

write in something and the permit clerk is going to copy the same thing that the homeowner writes. So just because it says it there doesn't mean that it was prepared by us. It might be just a copy that what the homeowner put down, and we just copy that. The permit clerks are not architects or reviews, so I -- I don't understand how to answer that question.

Q. Sure. Is this document a permit application submitted by an applicant? Does that look like an application?

A. No. It looks like a printout.

Q. Of what?

A. It looks like a printout of aluminum roof --

Q. What does it say at the top of this document?

A. -- aluminum roof and CBS --

Q. At the very top of the document.

A. Addition of carport or garage.

Q. Even before that, just the header. City of Miami Springs. Has an address. And then what does it say?

A. Building permit.

Q. Is this a building permit?

A. You said application.

Q. No, no. This is not an application.

A. No, I -- I thought you said if this is a

building application.

Q. Right. This is not an application.

A. Right.

Q. This is a building permit.

A. That's not our permit part right now, so I wouldn't be able to tell. I wasn't there, so.

Q. You weren't there, but this says building permit?

A. Yes, of course.

Q. And you have no reason to dispute that this was the building Permit 04-0686?

A. Could have been. Yes.

Q. And what does it say middle of the Page -- structure info?

A. Middle of the page. Right there. Aluminum permit -- I mean, building permit, and then it says DL aluminum. Where -- where at?

Q. Right where it's highlighted aluminum roof and CBS labs, and underneath that, there's something highlighted. What does it say?

A. It says rear yard accessory building.

Q. And this is a city document.

A. Yeah. But that may have been written by the applicant, not the city.

Q. So you -- .so this is an error by the city?

A. No.
Q. It's not an error?
A. Again, the -- again, the permit clerks are not architects. If they put down that I'm going to do a canopy, this may be interpreted as a -- as a -- as an awning.
Q. Do you have any evidence this was a mistake?
A. No. Do you?
Q. No. I think this wasn't a mistake.
A. I don't know. I wasn't around. I can't tell you.
Q. We keep -- except you can -- you cannot give any information to dispute that this was for a rear yard accessory building?
A. Well, that's what it says, but it's not -- it's not necessarily done by the city. The permit clerks are going to copy whatever the applicant writes on the application. I -- I cannot tell you what -- what happens after that.
Q. Just a final question.
A. Yeah.
Q. But you cannot dispute -- you have no evidence of dispute that this document which is a building permit --
A. Yeah.

Q. -- was for a rear yard accessory building?
A. If that's what it says. Yes.
Q. And do you know the setbacks applicable to rear yard accessory buildings?
A. Accessory buildings or accessory structures? See that -- that's the problem. You -- you say accessory building. I'm accustomed to accessory structures. So I -- I don't -- I -- I need to --
Q. So do you --
A. This is not an accessory structure or building. It is attached to the house. It's an addition. Even -- even Miami-Dade County has it as an addition --
Q. Sir. But you --
A. -- so --
Q. -- but it is an accessory.
A. No, it's an addition.
Q. It's not an accessory?
A. It's an addition. It's attached to the house.
Q. So the designation of accessory is incorrect in your opinion?
A. Again, I'm not the one that wrote --
Q. You cannot dispute --
A. -- I don't know who wrote that.
Q. -- you cannot dispute that.

A. Correct.
Q. Okay. And then you don't -- you are familiar with the setbacks that are applicable to accessory structures under the zoning code?
A. Yes.
Q. Generally, what do they require in the (inaudible)?
A. Okay. I'm going to give the best answer I can --
Q. Sure.
A. -- but that's -- I don't regulate that. I don't -- I don't verify that. I believe it is five feet from the rear, depending if it has an alley. If it has an alley, I think it have this. If it doesn't have an alley, I think it's a little bit more. If it has an alley, I think it's five feet. It has to be separated from the house, I think, 10 feet. And I think it has a side yard of 10 percent. But again, I'm not the expert on that. I don't review for that.
Q. And you do not dispute, based on the property appraiser records on the screen, that the -- that structure that we're talking about did not have plumbing?
A. Again, that's a Miami-Dade County paper. I don't know who prepares that. It's not the city, but

apparently the Miami County agrees with us because it says here, clearly, addition, so.

Q. Do you -- AD 1, do you dispute that that addition in this document says without plumbing?

A. Yes, sir. I mean, I -- anybody can read that.

Q. So you don't dispute that?

A. No. Why would I?

MR. MACHADO: Okay. That's all that I have for the building official. I do have questions for Silvia when you have the chance.

REDIRECT EXAMINATION

BY MR. URIBE:

Q. Yeah. Let me just -- one follow up for -- Ulises, could you -- could you please read the definition of accessory building from the city code Section 150-002(C)1?

A. "Accessory building -- a subordinate building in a rear yard detached from the main building and on the same premises as the existing main building, the use of which is clearly identified -- is clearly identical" -- no, I'm sorry -- "is clearly incidental and pertaining to that of the dominant use of the main building or land. An accessory use is one of which is incidental to the main use of the premises."

Q. Thank you. So if this were an accessory

building, it would have to be located in the rear yard, right?

A. Correct.

Q. And it -- and it would have to be detached by the very definition of the city code, correct?

A. Yeah.

Q. So in your opinion, is this addition -- the 2004 addition -- is it an accessory building?

A. No, it's an addition.

MR. URIBE: Thank you. Nothing further.

RECROSS-EXAMINATION

BY MR. MACHADO:

Q. One more question -- one more question on cross just to confirm. Mr. Building Official, you do not dispute that the definition of accessory building relates to subordinate buildings in the rear yard? That is correct, right?

A. Say that again?

Q. Accessory building is a subordinate building in a rear yard?

A. Yes.

Q. And the document that we looked at described an accessory building in the rear yard.

A. By someone that was not in the city necessarily. So I -- I -- yes, I mean, that could mean

that -- that you could represent that and -- and --

Q. Well, I'm not city -- the city representative.

A. No, that's not -- again, that -- that's my point. And I want to be clear. Just because it says it there doesn't mean that it was done by the city. Permit clerks sometimes are new. We get new permit clerks. They're not architects. They're not engineers. They're not contractors. They're going to probably write down whatever the applicant writes. That doesn't make it incorrect or correct. It might be just something that they copy from the homeowner and -- and that's it. It doesn't make it -- it doesn't make it true. That's my point. It's not -- it's not a -- it's not -- if -- now if you told me something that I wrote, that's a different story.

Q. But you have no evidence to support your suspicion that this could have been an error.

A. The only evidence that I'm presenting is that I see permit applications every single day and sometimes they -- they use different verbiage. And if there's any architects in the board, they can agree that sometimes the architects will say something but will name a structure something, and then zoning may name it something else. And if you go to a different state, they may have a different name for it, so. What

I'm saying is that what -- what is there doesn't necessarily mean that it was prepared by the city is what I'm trying to tell you.

Q. So do you mean to suggest that more often than not the city mislabels its permit applicants?

A. No. No, of course not. It said it may happen, and this is probably one case.

Q. Do you -- how do you -- how can you confirm that it's probably --

A. I cannot. I'm just saying it could have been a big -- I'm just correcting what your assumption is that it's a document prepared by the city. No, sometimes they write down what -- what the applicant is applying for, and we just copy it. And I'm saying, we -- I'm saying the permit clerks, which are not architects or engineers, so.

Q. But you have no evidence that that, in fact, occurred in this case there was an error in this document?

A. No, I'm just clarifying your assumption. That's the thing. You know, I -- I think I could have if I could make comments that -- I can?

Q. Please.

A. Okay. I -- I've never met the homeowner. I wish I would have had a conversation with you before.

It -- you know, I'm sorry that you -- that we're dealing with this at this point. We could have probably addressed this at an earlier stage, but I've -- I've never been contacted by her since the -- since this permit was -- was issued. And the reason I say this because I'm a resident here in Miami Springs, too. Okay. So I -- I care about what's happening in -- in the city. You're all my neighbors. Sounds a little corny, but that's how I -- that's how I see it. Okay. She has flooding issues. Okay. I would -- I would suggest, and I would present to her to basically, you know, look at the concrete that she has in the rear, and maybe that's something that -- that could alleviate that flooding. So I just want -- there's a lot of things that were said that I don't agree with, but --

MR. MACHADO: I appreciate your time, sir. And I do appreciate your service. We're not battling because we have a philosophical disagreement. We just have an actual disagreement because she is affected by it. And so she's concerned by -- this is the process the city code establishes for it, and so here we are.

THE WITNESS: Yeah. Well, I mean, I take some things personal when -- when they're not --

MR. MACHADO: No need to.

THE WITNESS: -- 100 percent true.

MR. MACHADO: Okay. Thank you.
THE WITNESS: Okay.
MR. TALLMAN: Anything further, Mr. Uribe?
MR. URIBE: No. Thank you.
MR. MACHADO: Okay. Cross this time? Silvia, you're on.
THE WITNESS: All right.
MR. MACHADO: All right. If I could go back to Mr. Rodriguez's presentation, if we could load that up and just walk through a couple of things quickly.
If we could go to the slide that has the alternative setback diagrams. There were two of them: one, showing that 25 feet --
MR. URIBE: Slide -- that's Slide 12.
MR. MACHADO: Yeah, we can -- we can go through it.
MR. URIBE: It should be about 12 there or thereabouts. 13. Look, almost there.

CROSS-EXAMINATION

BY MR. MACHADO:

Q. Okay, Ms. Vargas. Question for you. Mr. Uribe in his argument seemed to suggest that those Xs on that building are indications of potential demolition. Do you agree with that?

A. It appears to be.

Q. Do you see a line at the bottom part of the property? It has an X near it.
A. Which of the two -- there's an enlargement --
Q. The one on the right. The one on the right.
A. The one on the right.
Q. There's a little --
A. Yes, I do see that. Yes.
Q. Yep. So if Mr. Uribe is correct that the ones at the top left were proposed for demolition to meet this alternative setback plan, wouldn't it be consistent that the one at the bottom of the house that also has an X was proposed for demolition to meet these setbacks?
A. It -- it could be under that scenario.
Q. If it appears that that's where it is, right. Do you know if that part of the house at the bottom of this diagram below the line was ever demolished?
A. It was not.
Q. Going back to the other slide. So here we have, in Mr. Uribe's view, another alternative setback diagram, and we have the dash line marking off the 25 feet closest to Ms. Ferreira's property. Do you see that?
A. Yes.
Q. And the only building that appears to the left

of that line closest to Ms. Ferreira's property is that accessory structure that we have been discussing; is that correct?

A. Yes. The one that has the question line.

Q. Right. And that's the building that was partially demolished at one point in time?

A. I'm sorry,. Say that again.

Q. And that was the building that was partially demolished at one point in time.

A. I believe that to be the case at -- at -- that drawing is a little unclear, the that -- that copy of it, though, because I'm looking at this, which I believe this is part of, which shows a few other items in the rear yard.

MR. URIBE: If you go, Kris, to --

MR. MACHADO: Sure.

MR. URIBE: -- to the waiver of plat, so a little bit --

THE WITNESS: These are the boundary surface that weren't part of the --

MR. URIBE: Go back at -- yeah. Right there, you can see that there's other stuff down there, too.

THE WITNESS: Yeah.

BY MR. MACHADO:

Q. Right. But there is nothing on this survey

either that extends below the wall of the property closest to where it says 75 feet down there?

A. Down where it says 75, yes.

Q. There's nothing below that line.

A. Yeah. Just the fence. Yes.

Q. Right. So if we look at this diagram, that part that is marked with an X below the line, again, we're indicating here, all right. That part never demolished.

A. It was not.

Q. So as we move on here -- I want to go to the definitions. This is Section 150-002(C)18(e). So Mr. Uribe argued that the front yard, there is no discretion as to what it is for a corner lot. It has to be the yard adjacent to the street upon which the lot line has its least dimension. Do you see that?

A. Yes.

Q. Now the definition of front yard begins "a yard extending across the front of a lot". Do you see that?

A. Yes.

Q. What's the front of a lot?

A. The front of the lot is defined in a different section.

Q. Maybe to the left of that green box.

A. Correct.
Q. We have it on the screen. Yeah.
A. Yes. 18(e), under the definitions, which says that "the front shall be construed to be the portion nearest to the street".
Q. And it continues, doesn't it?
A. And it continues that "for corner lots, the lot front -- up front shall be the narrowest portion abutting the street."
Q. And it continues.
A. And it continues, yes. And it says, "unless determined otherwise by the planning and zoning director.
Q. Right. So in your opinion as a planner, are you required in interpreting zoning codes to read provisions together and attempt to reconcile them, or are you to read them in isolation?
A. Well, I -- I am required to make sure that I know all the different relevant pieces of information that are applied. So for the -- the front yard, I use 85. For the rear yard, I use 86. For the side yards, I use 87, and to define the front of the lot, I look at 18(e).
Q. So in determining the front yard, which is defined as a yard extending across the front of a lot,

you would have to look at (C)18(e)?
A. Right.
Q. Okay. Moving on to these examples that we have here. So Mr. Uribe discussed in his argument that there have been other situations in which lot subdivisions have occurred on corner lots. He presented, as a few of them, this one that is on Quail Avenue. Do you see 900 Quail Avenue?
A. Yes.
Q. And you see 910 Quail Avenue?
A. Yes.
Q. Do both of those properties have swimming pools?
A. Yeah, I think so.
Q. And are they located at the rear of those houses?
A. It -- yeah it looks to be the rear yard.
Q. Based on that line that is on the diagram, that green line rear yard?
A. Yes.
Q. Could you have a swimming pool in a front yard?
A. Not in Miami Springs.
Q. Not in Miami Springs. So both these lots -- both these houses are oriented toward Quail Avenue?

A. They appear to be. Yes.
Q. And they have their rear yards side to side?
A. They have extending -- yes, across -- yes.
Q. Parallel?
A. Uh-huh.
Q. How about for --
A. They have -- they have side yards side to side.
Q. Right. But they have rear yards in parallel.
A. Yeah.
Q. How about for Pinecrest Avenue -- Pinecrest Drive? 90910 Pinecrest Drive, front -- the front in parallel, the rear in parallel?
A. Possibly. I'm not sure because I haven't seen the street view of 900 and I see that there's some access there, so I'm not sure --
Q. But based on this --
A. -- on the side.
Q. Yeah. But based on this diagram --
A. Uh-huh.
Q. -- that the city prepared, that blue line is a front yard, isn't it?
A. That blue line is the front yard. Yes.
Q. So based on this diagram there, the front yard and the rear yards are in parallel?

A. Yes.
Q. Okay. How about 501 and 517?
A. Yes.
Q. Front and rear are parallel?
A. Yes.
Q. How about 901 and 903 Dove Avenue?
A. They appear to be.
Q. How about 1105 and 1101 Bluebird Avenue?
A. They look to be.
Q. So there are no examples that are situated similarly, to use Mr. Uribe's term, to the one that we have here, that you have shown in this presentation?
A. Well, actually, I think that it actually is consistent with -- with what, you know, the example you have just shown me because the rear yard of 200 North Esplanade would be parallel to the rear yard of Ms. Ferreira's property.
Q. Well, certainly in theory, but not in practice because the back of the building, the rear of the house facing Ms. Ferreira.
A. Going with your argument then, looking at these examples, the rear yards run parallel and the side yards are side by side --
Q. But --
A. -- in that situation --

Q. -- but in this --
A. -- as well as these.
Q. -- but in this situation, the rear of the existing house faces the side of Ms. Ferreira's property?
A. No.
Q. The back of the house is not facing the Ferreira property?
A. The back of North -- 200 North Esplanade?
Q. Yes. The structure.
A. The back of the -- no. The side of the house faces Ms. Ferreira's property.
Q. Let's go see that.
The front of the North Esplanade house here, which way is the front door facing?
A. The front of the house?
Q. Yes. The front of the house.
A. It depends on how you define the front of the house.
Q. Where is the front door of that house?
A. The front of the -- the front door is facing North Esplanade, but the code does not.
Q. I'm not asking about the code. I'm not --
A. Okay.
Q. -- the front -- we are talking common sense.

Front of the -- front of the door is Esplanade?
A. Right.
Q. Front door of Falcon, Falcon Avenue, correct?
A. I'm sorry.
Q. Front door of Falcon Avenue --
A. Front door is on the --
Q. -- is facing Falcon Avenue?
A. Yes.
Q. Front door of Esplanade is facing Esplanade? Yes?
A. The front door of 200 Esplanade is facing --
Q. Yes, correct.
A. -- the front door.
Q. So going back to the examples presented, they are not the same, because the front doors here are all in parallel.
A. I -- I haven't seen the houses from the ground, so I can only make assumptions, but I can tell you that I see lots of situations not related to the -- a waiver of plat or -- or subdivision of a lot. But I deal with a lot of permits where there are here in Miami Springs, corner lots where the front door of the house faces on the wide side of the lot, but we always, consistently, look at the narrow side of that lot as being the front yard, because we follow the definition

in the code.

Q. Well, I appreciate that. I think that you are right to discuss the code, but we are discussing real life common sense, right? Front door of both these properties, front driveways are facing the same way, right? They are facing the same way. They are facing the -- every single example presented, they are facing the same way. Ours is not facing the same way.

If I'd like to go back to --

MR. MACHADO: One second. Mr. Uribe, I'm not quite finished.

MR. URIBE: Sure.

BY MR. MACHADO:

Q. I -- I'd like to go back to our diagram here. I think it's on 12. Oh, before I get there, you agree now, having reconsidered this, that the partial demolition permit describes it as for a rear yard structure?

A. Yes.

Q. Okay.

A. Yes. We -- we --

Q. So the staff report is incorrect in that respect?

A. -- we -- we corrected that in the staff report, as a matter of fact.

Q. So you agree that it is rear yard? It says that.

A. It -- yes, it does say that.

Q. Perfect. So going back to this diagram, have you reviewed the public records that are associated with this diagram showing the alternative setback approaches, the two that we discussed.

Have you reviewed those public records?

A. To the extent that I have had the opportunity to do so.

Q. Are you aware of notes, handwritten notes, included in the file that accompany these two plans?

A. I believe that there is a key that goes with these diagrams that refers to line depicted as A and line depicted as B.

MR. MACHADO: Madam Clerk, I'm handing you, and I just handed the witness, handwritten notes available in the public record that correspond to what she just described as A and B.

BY MR. MACHADO:

Q. So Ms. Vargas, do you see now the handwritten notes that I handed to you?

A. Yes.

Q. And do you see that it references diagram A and diagram B?

A. Yes.
Q. And Mr. Uribe's presentation showed you this handwritten document, A and B, correct?
A. Yes.
Q. But he didn't show you the handwritten notes that I handed you, did he?
A. I think I saw these, but those are not what is on the -- what's on the slide.
Q. Do you see where it says, diagram A, "Cut off main house to achieve regulated setbacks"?
A. I do see that.
Q. It also says, doesn't it, diagram B, "Cut off main house to achieve regulated setbacks"?
A. Yes.
Q. And then it says, and this is important, "Any," and it has a box around it, "Any deviation from plan A or B is a variance subject to board and council approval."
Do you see that?
A. I do.
MR. MACHADO: I'd like to put on the screen, and I'm so sorry to do this to you all, but I just want the Board to see this because it is important.
So I'm going to hand the clerk a new USB with this document. And I would ask her when she is ready

to put this on the screen so we can go through it together.

THE WITNESS: Can I -- can I ask -- well, I mean, I'm not sure -- like, these are all photocopies and perhaps pieces of larger documents, so I'm not entirely sure if diagram A and diagram B notes here refer to the same diagrams that we're looking at, so.

BY MR. MACHADO:

Q. They are all in the binder next to you.

A. Okay.

Q. You can feel free to go through them.

All right. So here are the handwritten notes that I shared with Ms. Vargas, and you can see on the left-hand side of the screen, there is that "any" with the box on it. It says, "Any deviation from plan A or B is variance subject to board and council approval."

Do you see that, Ms. Vargas?

A. Yes.

Q. Okay. So we confirmed earlier testimony that the X at the bottom of this plan --

MR. TALLMAN: Could you go back to that prior slide, please?

MR. MACHADO: Sure.

MR. TALLMAN: The one before that.

MR. MACHADO: Sure.

MR. TALLMAN: Thank you. You can continue.

MR. MACHADO: Okay, great.

BY MR. MACHADO:

Q. So we confirmed earlier that the X that was marked at the bottom of the plan was a structure that would have been demolished to provide a fully-conforming rear yard setback had the orientation been on Falcon.

Is that not your opinion?

A. Potentially, yeah. I -- I can only speculate that that's what it means.

Q. Well, based on the plan, what can you determine?

A. If -- if the Xs meant portions that this diagram refers to, it could be the cut of -- the cut of portions.

Q. It would be consistent with these handwritten notes that say, "Cut off main house to" --

A. It could be.

Q. -- "achieve regulated setbacks."

A. I also see an asterisk note that says, "The reverse frontage corner house can be granted to assist owner in either case."

Q. Are you aware of any reverse frontage being applied for in this case?

A. I -- I don't know what a reverse frontage application would look like.

Q. Well, let's go through it. I'm going to hand you a document, and that is a letter -- is a letter from the property owner requesting reverse frontage for 300 North Esplanade -- two -- no, 300 North Esplanade, and if you bear with me, I'll get that document.

A. 300, you said?

MR. MACHADO: You know, I think the better way of doing it is to put it on screen, if I could have the USB back and we'll shuffle back and forth. Thank you.

THE WITNESS: Did you say 300 North Esplanade?

BY MR. MACHADO:

Q. I'm sorry. 300 Falcon Avenue.

A. Oh.

MR. TALLMAN: Does anyone in the Board need a recess while we are looking at these documents?

THE WITNESS: I'm ready to do five minutes. We can take a five-minute break if you'd like.

MR. MOLINA: Two minutes?

MR. TALLMAN: Two minutes.

(A recess was taken.)

MR. TALLMAN: Okay, continue this.

MR. MACHADO: Okay, great.

BY MR. MACHADO:

Q. So Ms. Vargas, we were discussing the handwritten -- we were discussing the handwritten notes that are in the public records that describe the two diagrams and that any deviation --

MR. MACHADO: You could scroll up a little bit on that one --

BY MR. MACHADO:

Q. -- any deviation from plan A or B is a variance subject to board and council approval.

A. Yes.

Q. Do you remember that?

A. Yes.

Q. If we could flip, please, to the next page. I don't think I have control of this one.

MS. GONZALEZ: PDF, so I'm scrolling down, right?

MR. MACHADO: You can stop right there. I -- stop right there.

BY MR. MACHADO:

Q. So Ms. Vargas, you correctly noted there's an asterisk, "Reverse frontage can be granted to assist owner in either case selected."

A. Okay.

MR. MACHADO: You We can go to the next page.

MS. GONZALEZ: Keep going?

MR. MACHADO: Okay, there, right there, please.

BY MR. MACHADO:

Q. Ms. Vargas, you see this is a letter from Thomas W. Jackson, Dave Wells, dated September 9th, 1983. Do you see that on the screen?

A. Yes.

Q. It's titled Request for Reverse Frontage, 300 Falcon Avenue, northwesterly half of lots 1 and 2, block 58, Cinema Park addition to CCE plat book 17-2. Do you see that?

A. Yes.

Q. And for the record, the letter states, "Dear Mr. Wells, as owner of the above described property, I hereby request reverse frontage on Falcon Avenue for a building site on new lot of which surveys are enclosed."

Is that an accurate reading of the letter?

A. Yes.

Q. And, of course, above described is 300 Falcon Avenue; is that right?

A. Yes.

Q. Are you aware of any letter in the file requesting any change in frontage at all for 200 North Esplanade?

A. No.
Q. So the only letter that you are aware of asking for a change in frontage is for 300 Falcon Avenue; is that correct?
A. I just became aware of this letter.
Q. You just became aware of this; is that right?
A. Yes.
MR. MACHADO: Now if we could leave that up.
BY MR. MACHADO:
Q. Ms. Vargas, what is the building height limitation in the R-1C Zoning District, more or less?
A. It is the same for all the residential zoning districts, and because my brain is starting to shut down --
Q. How about -- it's not -- it's not a memory test. I'm not going to test your memory?
A. I know. I am just going to, sir, it's 30 -- 30 feet.
Q. 30 feet, right?
A. Yes.
Q. 30 feet.
A. 30 feet.
Q. So Mr. Uribe argued that the only way the owner can make use of the property is by having the side yard be the closest to Ms. Ferreira's property.

But that's not true because they could build up the 30 feet in height; isn't that true?

A. I suppose it depends on -- is this a -- it's a narrow house, the house that -- that existed there, and I suppose it would depend on how the architect chose to --

Q. Right. But by zoning -- but by zoning, they could build to 30 feet?

A. By zoning, a -- a building could be extended out. Yes.

Q. And one final point, there's nothing in the zoning code that you are aware of that requires an appeal of an administrative determination to be brought within a certain period of time, is there?

A. I'm not aware of that.

Q. Thank you, ma'am.

MR. TALLMAN: Question. So I'm looking at your Exhibit Number 1, the warranty deed for 200 -- 200 --

MR. MOLINA: Esplanade.

MR. TALLMAN: Esplanade, right?

MR. MACHADO: Yes.

MR. TALLMAN: And I just want to make sure I understand here. So when it says 300 Falcon Avenue, NWLY, one-half --

THE WITNESS: Yes.
MR. TALLMAN: -- of lots 1 and 2, block 58. So that means what exactly?
MR. MACHADO: Well, now we have to go back to my presentation to show you the diagram.
MR. TALLMAN: No, I remember the -- I remember the diagram.
MR. MACHADO: It is --
MR. TALLMAN: -- but what is -- what does NWLY mean?
MR. MACHADO: Well, I'll --
THE WITNESS: Northwesterly.
MR. MACHADO: Northwesterly.
MR. TALLMAN: Okay. All right.
MR. MACHADO: And for the record, I will submit into evidence the two deeds of the two properties, and we can just have that in the record.
MS. GONZALEZ: All right. Thank you.
MR. URIBE: I'm sorry. I'm working on it. I think I'm almost here. I hope so. Thank you so much for your patience.
BY MR. MACHADO:
Q. All right. So Ms. Vargas, I just handed you two warranty deeds. If we could start with the first one, the first one is dated August 2nd, 2021.

Do you see that?

A. Yes.

Q. The parcel ID at the top left, 05-3118-016-1590.

Is that what it says?

A. Yes. Yes.

Q. Property address in the middle of the page, 200 North Esplanade Drive, Miami Springs, Florida 33166; is that right?

A. Yes.

Q. And the legal description in the center, it says this is "200 North Esplanade, southeasterly half of lots 1 and 2, block 58, Cinema Park addition to the Country Club Estates, according to the plat thereof as recorded in plat book 17, Page 2 of the public records of Miami-Dade County, Florida"; do you see that?

A. Yes.

Q. Second deed, quick claim deed dated April the 20th, 2023.

Do you see that deed?

A. Yep.

Q. Folio at the top left, folio 05-3118-016-1591; is that correct?

A. Yes.

Q. Middle of the Page -- I'm sorry. Right

underneath quick claim deed it says, "From Michelle N. Ferreira to Michelle N. Ferreira as Trustee of the Michelle N. Ferreira Revocable Trust dated January 3rd, 2023, whose address for notice purposes is 300 Falcon Avenue, Miami Springs, Florida 33166; do you see that?

A. Yes.

Q. Middle of the page, legal description, "The northwesterly half of lots 1 and 2, block 58 of Cinema Park addition to Country Club Estates, according to the plat thereof as recorded in plat book 17, Page 2 of the public records in Miami-Dade County, Florida"; do you see that?

A. Yes.

Q. Just for the record, both deeds are in evidence and that confirms that the letter that we have on the screen refers exclusively to 300 Falcon Avenue, described as a northwesterly half of lots 1 and 2, block 58, plat book 17-2, correct?

A. Yes.

MR. MACHADO: Okay. Thank you very much.

MR. URIBE: I will be very quick. A couple of things. I'm sorry. Is my presentation still there? I'm really sorry. I promise I'm going to do one slide, and I'm not going to do any more of my questions.

REDIRECT EXAMINATION

BY MR. URIBE:

Q. But while we get that up, Ms. Vargas, these handwritten notes that were shown to you --

A. Yeah.

Q. -- over here and that Mr. Machado put on the screen, can you tell, do they indicate who wrote them, when they wrote them, or anything like that?

A. No. No.

Q. Thank you. And let me ask you, and in reviewing the aerials and the building permit history and the demo permit, which was for a partial demo of accessory building, would you say it was clear that the building official accepted whatever demolition took place on the accessory building and continued forward with the permitting and approval of Ms. Ferreira's house?

A. Yes.

MR. URIBE: And if I could steal the clicker from you, Kris, please.

MR. MACHADO: Sure.

BY MR. URIBE:

Q. I want to go back quickly here just to the question of who gets the side and who gets the rears and whether the house -- the houses have to have -- you know, whether the houses get the sides and the rears

together, right, or parallel as Mr. Machado said. I want to bring up property here as we get to the end, obviously. So here, this property is 2201 Ludlam Road.

Have you seen this property?

A. Yes.

Q. You see that the narrower frontage is on Ludlam Road and the longer is on Robin Avenue?

A. Yes.

Q. You that this is the elevation of the front of the house, and it's highlighted. You can see it says front elevation has the door, has the garage. This is a site plan. You see that the front 30 feet, the front setback for the front yard, is provided against Ludlam Road?

A. Yes.

Q. Even though the driveway, and you can see the concrete walkway and the front door, are all on Robin Avenue?

A. Correct.

Q. Okay. And the setback between the garage and Robin Avenue is 20 feet.

Can you see that?

A. With difficulty, but, yes.

Q. Okay. You can see that towards the rear where there's a canvas cover --

A. Yes.
Q. -- right, towards the rear of the -- what we would consider as the rear of the house, that's 19.57 feet. Can you see that?
A. Yes.
Q. Is that a rear setback?
A. No.
Q. Okay. Towards the bottom of this drawing -- it's kind of covered there, I wish I could zoom in, but -- okay, can you take my word that that says 25 feet?
A. I see it. Yes.
Q. Okay. And that's -- is that consistent with the rear yard?
A. Yes.
Q. Is that rear yard opposite to where the front door is in this house?
A. No.
Q. Okay. And yet the front yard is still along the narrower street front?
A. Yes.
MR. URIBE: Thank you. Thank you. No, that's it.

RECROSS-EXAMINATION

BY MR. MACHADO:
Q. Just one quick question. Ms. Vargas, have you

reviewed the entire file pertaining to 2201 Ludlam Road?

A. No.

Q. Do you know if there are any letters from the building official pertaining to this property and its setbacks?

A. I do not know, but I see that this is an approved plan.

Q. Is your familiarity with this property limited to the diagram that's on the screen?

A. Yes.

MR. MACHADO: Thank you.

FURTHER REDIRECT EXAMINATION

BY MR. URIBE:

Q. To approve -- excuse me. Ms. Vargas, to approve these setbacks or to approve this house with those setbacks provided, would that require a variance?

A. No.

MR. TALLMAN: Thank you. Okay. Questions from the board?

MR. VALENCIA: I have a couple. And I guess this is for Mr. Uribe. So if --

MS. GONZALEZ: Is your microphone on?

MR. VALENCIA: Oh, am I disconnected?

MS. GONZALEZ: No, you just need to push the

gray button.

MR. VALENCIA: Oh.

MR. TALLMAN: There you go now.

MR. VALENCIA: Mr. Uribe, so in the document submitted, there were some allegations that the work that was being done at 200 Falcon was illegal, right? So my questions are: Was it done without a permit or was it work being done with a permit?

MR. URIBE: To my -- to my knowledge, I don't know that current work is being done without a permit. I don't believe so. I believe it's being done according to the permit that was approved in 2022,.

MR. VALENCIA: Was it -- was it done without city approval?

MR. URIBE: No. It was not done without city approval. No, it was approved by the city.

MR. VALENCIA: Is it done by an unlicensed general contractor?

MR. URIBE: Not that I'm aware of.

MR. VALENCIA: Were there no fees paid to the city?

MR. URIBE: I think there must -- mister -- Mr. Building Official can speak to that.

MR. VALENCIA: Well, were there fees paid to the city or is there --

MR. URIBE: I'm assuming that they had to be in order to get the permit issued? That's how all permits go.

MR. VALENCIA: So when a house -- I mean, because I -- I'm questioning this whole unlawful wording, because that's kind of inflammatory. So basically what I'm seeing is that the 200 Falcon house is being built possibly in violation of setbacks.

THE WITNESS: At 200 --

MR. URIBE: No. At 200 North Esplanade.

MR. VALENCIA: Or -- well, 200 of Esplanade -- falcon and Esplanade.

MR. URIBE: Yeah. I believe that is what the appellant is alleging.

MR. VALENCIA: Okay. So that's just -- it is just that I see these things and I go, okay, everything's being done. It was done with an architect. It was done with a permit. It was done with city approval. It was done by -- it is being done, I -- I'm assuming, by licensed contractors and all fees were paid to the city.

MR. URIBE: I don't mean to speak for the appellant, but I believe what the appellant is saying is that, although the city approved it, they feel that they approved it in error. And, of course, staff does

not feel that it was approved in error. We feel that the front was properly located where the code says it needs to be located, the front yard, and therefore that's a site setback, and therefore the setbacks are compliant --

MR. VALENCIA: Okay.

MR. URIBE: -- as they -- towards the appellant's house.

MR. VALENCIA: I have a question for the -- for the other attorney. Is it -- so why is it the -- that letter that was presented that says that a reverse of frontage required for the Falcon Avenue -- the 300 Falcon Avenue, but why is that needed?

MR. MACHADO: Exactly why we have presented this case, because the lots when they were combined as two -- we can put Henry on if we need to -- had frontage on Esplanade.

MR. VALENCIA: Right.

MR. MACHADO: So the only reason why you would have to reverse the frontage for 300 Falcon is because the frontage was on Esplanade, but they did not reverse the frontage for the 200 North Esplanade property.

MR. VALENCIA: But the lot was split.

MR. MACHADO: The lot was split.

MR. VALENCIA: It's two different properties.

MR. MACHADO: Correct. No, but it is -- it is two properties that are similarly platted as part of the same plat, and -- but we have in the city staff report a concession that at the time before the waiver of plat occurred, the frontage of those two lots was on Esplanade.

And so the Wells' handling notes and the documents, the letter from Wells, show that to change the frontage of a property, you had to make a request, and the request was for 300 Falcon, and Ms. Vargas confirmed that she has not seen any letter asking for a request to change the frontage of 200 North Esplanade.

MR. VALENCIA: So if the request wasn't made, let's say that the letter was never submitted, what would the frontage be?

MR. MACHADO: The frontage would remain on 200 North Esplanade. On Esplanade, that is our entire case.

MR. URIBE: That -- that's against the code.

MR. VALENCIA: Because how can that be?

MR. MACHADO: Because the lot was -- had frontage on Esplanade before the subdivision. The house was built and had a front door facing Esplanade. And at the point before the subdivision occurred, the city admits that the frontage was on Esplanade. That

is the default condition, frontage is on Esplanade unless reversed. We have a reversal for 300 Falcon. We do not have a reversal for 200 North Esplanade, because there's an existing house. And we went through the setback diagrams, and we showed that the house --

MR. VALENCIA: I'm not -- I'm not -- yeah, I'm sorry.

MR. MACHADO: No.

MR. VALENCIA: There's only one -- once a lot is split in two, that lot only has one front, the lot in 300, and that is on Falcon. There is no other frontage.

MR. MACHADO: No, that is --

MR. VALENCIA: It is two different lots.

MR. MACHADO: But as we as we described in the diagram, that would've created nonconformities, which is directly against what Mr. Wells said, and it's directly against what the planning requires, and it's directly against the code of Florida Law. You cannot create nonconformities, so the frontage had to have remained on Esplanade.

MR. VALENCIA: There is no other frontage.

MR. MACHADO: There is no other front door. It's on Esplanade. That is the frontage.

MR. VALENCIA: How?

MR. MACHADO: We can go back to the diagram and you can see it.

MR. URIBE: I think --

MR. MACHADO: Sure. Look, we're going to explain this to you. We can go back to the presentation slide. Well, my presentation. I'm sorry.

MR. URIBE: Okay, can we use mine?

MR. MACHADO: Do you have -- you have the plat there? We can use it with the plat.

MR. URIBE: Yeah. At the very beginning.

MS. GONZALEZ: Yeah, of course.

MR. MACHADO: Well, not the plat, but I have -- well, there. Leave it there. Hold on -- go back. Hold back. Hold on. Okay. You see the existing lot and home, the house?

MR. VALENCIA: Yeah.

MR. MACHADO: That house is facing Esplanade.

MR. VALENCIA: Yeah.

MR. MACHADO: Those two lots, before that line goes in the middle --

MR. VALENCIA: Yeah.

MR. MACHADO: -- had frontage on Esplanade. They did not have frontage on Falcon. So when you split the two lots, clearly, Falcon with that letter, they reversed the frontage to make it Falcon.

Esplanade, there is no such request --

MR. VALENCIA: And that's not what I'm saying.

MR. MACHADO: -- you know.

MR. VALENCIA: I don't see the reason for the letter.

MR. MACHADO: Well, it's consistent with what Wells required. He said, if you want this lot to have frontage you -- and to be a buildable lot, you have to make the request, and they made the request. There's only one out avenue, one avenue, one street, that that other lot could have frontage on. It's Falcon. You're right. But for the other one, the corner lot, you could have it on Esplanade. You could have it on Falcon.

MR. VALENCIA: I agree. I agree.

MR. MACHADO: Yeah, so.

MR. VALENCIA: But that's not what the letter is for. The letter is for 300.

MR. MACHADO: For 300 --

MR. VALENCIA: Yeah.

MR. MACHADO: -- because --

MR. VALENCIA: Well, that -- that's my confusion.

MR. MACHADO: Right.

MR. URIBE: Let me -- let me -- let me see if

I can add some clarity, or let me express my point of view here on this, the staff's point of view. The letter was required for the new lot because that lot had never existed and never had an address. Never had anything. So that's why they asked for it. However, when you see the 75 feet and -- on Falcon for the corner lot and 100 feet on Esplanade, you look at the code.

And what does the code say? That you don't need to ask for reverse frontage. The code already dictates where that frontage is going to be, and it's going to be the narrower street front. So you don't need to ask for it. You already get it through the operation of the code, okay? You would've had to ask for it if you wanted the frontage to be on Esplanade.

MR. VALENCIA: Yep.

MR. URIBE: So the absence of that letter shows you that the frontage ended up on Falcon.

MR. MACHADO: If I -- if I may, we saw the letters that we went over. Wells said, provide 25-foot setback at the rear. Provide the side yard setback facing the Falcon property. We have a history, which the City admits is important to look at. You have to consider history. They went over the building permits. It so happened that the building permits that they

relied on did not say "side yard." They said "rear yard," which shows that the back of that house was a rear yard throughout his history.

And so Wells, when he imposed his requirements, he said, there has to be a 25-foot rear, meaning he determined in that letter that the front of the house was Esplanade. And there is no other written determination in the record to reverse that. The City says, in its staff report, that obviously he reconsidered. Well, that's not based on evidence. There is no document they pointed to that shows he reconsidered. This is a man who wrote numerous letters, who had a propensity to write letters, and put it in writing. And yet, all of a sudden, he reversed himself on every single point. He changed the setbacks, according to the City. He changed the nonconformity condition, where now you can have nonconformities.

That's simply not consistent with the evidence. The evidence shows that, throughout its history, that corner lot had its front on Esplanade, had its rear by the Falcon property, and all the documentation proves that. There is no document in evidence that shows anything different. There is no document that shows reconsideration of any kind.

MR. VALENCIA: Another question that I had is, so at the time that Mr. Wells wrote the -- his letters and -- was there a planning and zoning director in the City of Miami Springs, or were -- was the building official acting as planning and zoning director and under -- or was that even -- did that designation even exist?

MR. URIBE: The definition was in the code at that time as planning and zoning director, but we don't have any knowledge that there was a planning and zoning director per se. It seems that everything flowed through Mr. Wells.

MR. VALENCIA: Okay. What a mess. I don't -- I don't -- I don't -- I mean, I have other comments, but I'll just -- it's a mess.

MR. MACHADO: If I may just respond to your first question, you mentioned that the language in the letter was inflammatory. We have an obligation --

MR. VALENCIA: No, no, no, no, no. Not the letter. On the -- on the --

MR. MACHADO: The appeal.

MR. VALENCIA: -- documents you guys submitted.

MR. MACHADO: The appeal.

MR. VALENCIA: Yeah.

MR. MACHADO: We have an obligation under Florida law to argue our case consistent with the law. And there are cases -- I'll cite to you Fontainebleau Gas & Wash v. Dade County -- and others that say, if you build in violation of the setback, you are building illegally. That's what it is. We're not saying that they did it on purpose. We're not saying that they were malicious. It's illegal. It doesn't comply with the setback requirement. That's why we use that term.

We tried to be moderate in our language. We even said, who knows what happened in terms of having the applicant make these representations? We're not saying that he lied on purpose. We're just saying it happened and it's not consistent with the property's history. And if you would've looked at the file at the beginning, you would've seen these letters, and it would've called to mind an obligation to figure out, hey, what really happened here in '84? What are the obligations for this lot before I go out and build something?

MR. VALENCIA: Well, the reason I said that is -- and when the property owner, which obviously is also -- has a lot at stake at this and -- yeah, and it's emotionally driven, I believe. When she made her appeal, she made a lot of implications. She said

things like, maybe this was done with a permit. Maybe it was done without a permit. Maybe it was done legally. Maybe it wasn't done. She doesn't really know.

So that kind of like -- and then there were other things that she claimed, which -- I agree totally with the building official that her property was flooding. And just by looking at the site, I can see that 75 percent of her property is impervious. So of course, it's going to flood. She only has one part in the northwest part of the property that actually allows water to percolate. So that may be or may not be because of her property. It may not be or may not be because of the house next door.

But I can see, just by looking at the -- at that site, that that site has going to have -- without even doing any -- that site is going to have a problem percolating, and it's going to be subject to flooding because the water has nowhere to go. And you said it perfectly.

I don't have any other questions for now, but.

MR. MADAN: And question -- so you -- you're stipulating that the addition -- I'm looking at the 2004 permit. Did that addition that was done -- that those are accessory structures?

MR. MACHADO: Yes. We believe they are accessory structures. The building permit says it's a rear yard accessory structure or building. We look at it, and it's a screened enclosure with an aluminum roof. We look at the property appraiser. There is no (inaudible), right? All those facts show that it's not an extension of the house. It's something added onto to it. It's accessory.

MR. MADAN: So do you believe that those were built in violation of the zoning code?

MR. MACHADO: Possibly. I don't have an opinion on that. I don't think that my opinion matters on that point. It doesn't sway us either way because all that shows is there was some improvement in the rear yard. If we treat it as an accessory structure, it's consistent with a 5-foot setback. If we treat it -- the City really brought this up, saying, well, that couldn't be -- have been built unless that part of the yard was a side yard. We rebutted it by saying, well, if it's an accessory structure, it only needs a 5-yard setback. It doesn't need to comply with the side yard setback.

MR. MADAN: But it -- the City code -- I'm reading the R-1C District, and it says that accessory structures have to be separated from the main residence

or other accessory structures by 10 feet. Those are clearly attached to the --

MR. MACHADO: And that's a current --

MR. MADAN: -- to the primary structure.

MR. MACHADO: That's the current code, right? The current code.

MR. MADAN: Would that -- has that changed?

MR. URIBE: That has not changed.

MR. MACHADO: So the -- again, it will not sway us one way or the other if it's accessory or if it was built in violation of the code. It could be, like the building official testified, that somebody made an error. He said there -- that happens. People make errors when they describe things. Maybe they made errors when they reviewed things.

We're claiming they made an error when they reviewed the -- this application because they didn't look at the waiver of plat documents. So the fact that it could have been an error, we don't admit or concede. It's possible.

MR. MADAN: So while we're looking at this whole thing in totality and we're looking at the whole history of it and error, so any error that may have been done in -- throughout the time frame of this affects our decision today. And clearly, to me, it

seems that it couldn't have been treated as an accessory structure because it's in violation of this requirement that it be separated by 10 feet.

It would've had to have been a main -- an addition to the main structure with -- it falls within the required setback. I don't see how it could have been treated as an accessory structure. It -- I just -- I can't imagine they would've completely ignored this section requiring the 10-foot separation.

MS. VARGAS: Can I add, Mr. Madan, that, if you go to Section 150-002(C)(1), which gives you the definition of "accessory building," it clearly also says there that it has to be detached from the main building, which it -- clearly that one is not.

MR. MADAN: So I guess that's my point on that question. I had the same question on was there a planning director separate from the building official. Does the code define this process of reverse frontage? I looked myself. I didn't see anything.

MS. VARGAS: No. There is one reference to reverse frontage in the entire code. And it's in the Northwest 36th Street District. It does not define a process. It is not defined in the definition section. I have never seen an application. I -- I'm not even sure that it's ever been applied except for this

instance that I'm aware of.

MR. MADAN: Okay. I -- so I think, given that there is no process defined in the code, I would say that the planning director's interpretation and the review of the building permit is essentially acting as approval of a reverse frontage, assuming that that's even a possibility in this case. The way I'm reading the term "front yard," I agree that I don't see any leeway there, that the front yard is the narrowest point. It doesn't have the same qualifier that it has when you're -- when it's defining the building area -- building site area. Sorry. Okay.

MR. MACHADO: Yeah. Mr. Madan, on that point, just keep in mind that we're supposed to review and interpret zoning codes in pari materia. That means together, consistently. We're supposed to reconcile the two, not divide them, not read provisions in isolation to the exclusion of others.

I discussed with Ms. Vargas those two provisions. She admitted, to review and determine what the front yard is, she has to look at what the front of the lot is. The front of a lot is defined, and it does include discretion for the building official to make a determination as to corner lots. That is a reading that is consistent and reconciling two provisions.

It's not reading them in isolation. And if you focus on one to the exclusion of the other, you're committing a mistake under Florida law.

MR. MADAN: Generally, though, don't you go with the more conservative approach, which, in this case, is the narrowest is the front?

MS. VARGAS: Yes.

MR. MACHADO: Well, I'll say to you that, under the law, there is no such thing as -- you know, there is this discussion about, well, what happens in the event of a tie? It goes to the runner. There is no such thing as that. There is no such thing as the more conservative view that you -- when you construe provisions, you're supposed to reconcile them. If they're not reconcilable, you can go with the more specific.

But whereas interpretation harmonizes two provisions -- that's what it means to read something in pari materia. Together of the same material. That is the proper and desirable interpretation. And that's what we've done here. We've seen the two provisions. They refer to "lot front." We go to the definition of "lot front" to be instructed as to what that means.

MR. MADAN: Oftentimes codes have provisions that it says, when there are conflicting regulations,

the more restrictive shall apply.

Do you know if this code has that same provision?

MS. VARGAS: I'm going to have to go back and look. Off the top of my head, I can't remember, but I agree with you that many codes do have that provision, and that's usually the way that we apply the regulations.

MR. MADAN: Okay. And I think I'm okay.

MR. MOLINA: I don't know if we're going in order or --

MR. MADAN: Yeah.

MR. LAMAS: I have one question. We currently have what -- subsection 85 that dictates the narrowest portion closest to the road should be the front. Was this or something similar in place at the time that the lots were split?

MR. URIBE: Yes.

MR. LAMAS: Okay. So it's possible that it would've been -- it would've been changed to Falcon and that the existing nonconforming structure -- would that have been allowed?

MR. URIBE: We could certainly -- it would certainly be our position that that is what happened. None of us have the benefit of having been there at

that time. But certainly, one of the things that we feel is a possibility -- and again, it's just a possibility, right, because we're guessing as to what happened back then based on limited evidence that we have. The -- what you would call the front yard setback off of Falcon Avenue and the rear yard, which would be nonconforming if you look at the house with a front on Falcon and a -- that would be nonconforming, right, because it's too close. It's not giving the actual 30 feet.

Those physical aspects of the house were not implicated in the waiver of plat. The only side of this house that was implicated in the waiver of plat, when you're thinking about creating a new lot where the appellant's house is now, is going to be the side of that house that is closest to it. So it would make sense that the emphasis was going to be on what is the relationship between the existing structure and the new structure, right?

So we have nonconforming structure regulations in the code to deal with the fact that this sometimes happened. Nonconforming sometimes are -- they happen. And so of course, we don't encourage them. We don't want them to increase or expand, but they happen, and they are allowed to continue. That is the regime with

nonconforming.

MR. MACHADO: Yeah. If I may respond, when you consider the nonconforming issue in this case, if you look at the code provisions that deal with nonconformity, it is a legal improvement that is made nonconforming by a subsequent change in law. So you have a house that conforms. The City rezones it to something different or changes the setbacks. Now, the house, through nothing that the owner did, becomes nonconforming. It's protected. Florida law says you cannot create a hardship and then rely on it and say, well, I'm so sorry. I'm now dealing with a difficulty. Please give me relief. So you can't create a nonconformity.

The argument the City is making is that David Wells, although he said in his letters, you cannot create nonconformities, then went back on that and acted in a rogue way and said, you can. You can do it. And there is no document in evidence that says he never changed his mind. And we saw from -- Mr. Iler's testimony is that nonconformities are disfavored. They shouldn't be created. Now, if it happened through an act of the City and not of the applicant, you can allow it to continue. It's protected.

But here, it would be an intentional

subdivision of a law that creates a nonconformity, makes a property nonconforming to the code, not through an act of the City, but through the applicant's request. And Wells was clear in his letters: that should not happen. And Iler was clear in his testimony: that is not proper planning.

MR. URIBE: Just to respond, number one, it was the City that approved the waiver of plat. It was requested. And often rezonings, for instance, that create nonconforming uses are also requested by the owner. But it is the official City action, and, on the waiver of plat, it's stamped, this was done. Approved by the City.

And the second point is that -- hold on one second. Oh, my God. I lost my train of thought. It's getting -- it's past my bedtime. I think -- I think the nonconformity question can be answered also by looking at, unfortunately, what happened. What actually happened? The evidence that we have is not in another writing by David Wells, but it's the -- it's the subsequent treatment of this property for the last 40, but definitely 21, years that it is there. It may not be written down. It may not be in a letter. Mr. -- Mr. Wells and his propensity for writing may have retired by that point. We're not sure.

But the fact of the matter is the City treated that as a side setback at least since 2004. And if we're going to go ahead and undo all of that so that Ms. Ferreira can enjoy a 25-foot setback that was -- that was -- that was put in a letter, in an advisory letter, on a house that clearly does not exist in the same form that it does today, I would say that that would be an absurd result.

MR. MACHADO: If I may respond briefly, just to address one point, anybody in the City is entitled under those zoning codes to whatever setbacks are provided. We're not asking for anything that the code doesn't require. This house, under the City's theory, does not have any rear yard setback that fully conforms. If you face it on Falcon, your rear yard, as we saw on the screen -- 13 feet. Your front yard -- 15 feet, not 30. The only setbacks that the house provides are on the side yard facing Esplanade, which, at the time of the waiver of plat, was the front yard. So you don't --

MR. URIBE: And against your client's property.

MR. MACHADO: Well, against -- the client's property provides 6.29 feet. So we're asking for a rear of 25 feet, which this property, under their

theory, does not need to provide anywhere because somehow Mr. Wells changed his view that was very clear in writing, did so without providing any letter and said, yeah, you can do whatever you'd like. No need to provide any rear yard anywhere.

MR. LAMAS: But I -- oh, sorry. But I guess my point is, in either one of the arguments, it becomes an existing nonconforming, right?

MR. MACHADO: Right.

MR. URIBE: Excuse me. Say that again?

MR. LAMAS: In either one of your arguments, the house becomes existing nonconforming?

MR. URIBE: Well, correct. So in -- I -- if we go the other way, if we go Mr. Machado's way, then we have nonconforming because it's against Section 150-002(C)(85), and the front lot -- and the front yard is not located where it's supposed to be. Either way, it's a Catch-22.

What we're talking about is the history has treated it this way. The City has allowed this to be this way. All the owners since then of 200 North Esplanade have relied on this, and it would be completely unfair and completely absurd to turn all that around and go back to 1984, to a situation that just no longer exists. We're not conceding that it's

nonconforming one way or the other. This is just the reality of what has happened. All of this other stuff that we're talking about is all hypothetical.

MR. VALENCIA: Sorry. A quick question. So if the house is nonconforming and you plan an addition and an expansion of the house, is there anything in the City code that allows you to do that without having to go through a -- an appeals process?

MS. VARGAS: You would not be able to expand the nonconforming portions of the house, right? So you could not extend towards the rear if the rear is nonconforming. You could not extend to the front if the front is nonconforming. But to the side, where they have the ability to still get that 7.5 feet, you could because you will still be in compliance.

MR. VALENCIA: So how was this allowed to happen at the rear of the house?

MS. VARGAS: I said -- I said you don't. Yeah.

MR. VALENCIA: But it was allowed?

MS. VARGAS: No. Not to the rear.

MR. VALENCIA: Yes, it was. The addition -- the new portion of the house that was built was allowed to be built beyond or encroaching the 25-foot rear setback. It was.

MS. VARGAS: There is language in the code that states that you can extend a line of nonconformity as long as you don't exceed it.

MR. VALENCIA: How does that happen? Does it have -- does it have to go to an appeals process?

MS. VARGAS: No.

MR. VALENCIA: Does it have to go to -- is it an administrative process?

MS. VARGAS: It -- it's in the code by -- right.

MR. VALENCIA: It's in the code that who has the authority to allow that?

MS. VARGAS: It -- it's written in the code as such.

MR. VALENCIA: But who authorizes that? The building official, the planning official?

MS. VARGAS: It -- a part of the zoning review of a permit. So it is an administrative decision.

MR. MACHADO: If I may just --

MR. VALENCIA: That doesn't make sense, but --

MR. MACHADO: The Code Section 150-029 says, "A nonconformity is something that existed legally."

MR. VALENCIA: Yep.

MR. MACHADO: You cannot go out and create something illegal. Even if the building official says,

that's fine, the building official cannot go out and say, I don't care what the code says. You can build whatever you'd like. It has to be legal to be nonconforming. There are three options: it's legal conforming, it's legal nonconforming, or it's not legal. Those are the options.

And that's why in our letter we say, well, clearly there are these letters from Wells that are evidence. We have to see what the documents say. We can't just go out and speculate. The City says, disregard the letters. Assume that he reconsidered. How can we do that when his letters are very clear throughout the entire process. You have to provide conforming setbacks. You can't create a nonconformity.

MR. MOLINA: I think we've made these arguments.

MR. MACHADO: Yeah.

MR. MOLINA: We appreciate that. If I may, just because it's 9:15, just about -- so look, I think, first and foremost, this is terrible for both parties. So it sucks. I think what you said is right. It's a huge mess. You know, one of the things that I've learned being on this board is that common sense isn't always what the -- what the actual code says, right? Sometimes the code doesn't feel like it's -- has a lot

of common sense, but yet we have to go by what the code says.

You mentioned in your argument, Mr. Machado, that we should consider the history. The question in my mind is which part of the history. The City's actions, it seems to me, in 1984 allowed for a partial demolition, implying that the City did not consider the full 25-foot setback a necessity in their enforcement.

So yet, in 2004, let's assume that that's incorrect based on your assertion that Mr. Wells' letters dictates -- shows that that was not the case. However, there is additional history that we should take into account. In 2004, the permit further reinforced the City's application of these setbacks, allowing the previous addition and the same footprint that was disputed in the -- in the 2021 addition.

And in this latest permit, it seems that the city planner was exercising their authority, and it made the determinations of what the front yard and the rear yard are, based on the code. So in my opinion, it seems like the city planners reviewed the code and applied it as such. And the owners of the -- of the house in question, on 200 Esplanade, simply went to the City, said, what does the code say? What do we have to do to be compliant with the code? And that's what they

did.

Now, all the issues that have been raised, I think, are valid and unfortunate, but it seems like the city planners -- not Ms. Vargas in this case. A previous city planner was in their right and in their authority in how they interpreted the code, and thus the homeowners applied for the permit and were issued the permit based on that determination, of which we have agreed that the city planner has the ability and the purview to make determinations. So --

MR. MACHADO: Right. Well, I appreciate that. And I do appreciate the concern for what the parties are going through. It's unfortunate. I was thinking about this, and I thought, would I want to have a house so close to mine if I'm trying to use my back yard? Of course, I wouldn't. It's something that you wouldn't want to happen everywhere -- anywhere. And that's why we have setback requirements. It just really is a terrible situation all around.

What I'll say is that, if we look at the history, we have to look at the text, right? We know there are deductions we can make, inferences that we provided, speculation that can happen. But the letters that are in the file, even the building permits in '84 and 2004 -- they all reference "rear yard," and that

gives it away. That's the rear yard where these improvements are happening. And that's where a rear yard setback is required.

We've reconciled that by saying, well, there could be an accessory setback of 5 feet. But ultimately, it's not a question of whether the City permitted something in 2004 and therefore they can permit anything now. It's what do the documents say? And they very clearly say, from the Wells letters all the way through to 2004 and 2014, it's in the rear that this has happening. Even the applicant's own plans say it's in the rear that this is happening.

And common sense and the history show that's what is going on. It's a rear yard improvement, and there should be a rear yard setback. We're not saying they can't build it. They can come back here and ask for a variance. You might give them a variance, but that's what should happen. There should be due process and a review under the variance standards, not just an administrative (crosstalk).

MR. MOLINA: I understand. And you would think that your front door is your front yard. But unfortunately, the way that this code is written, that is not the case, right? The way the code is written is that it is the shortest -- in this case, the 75-foot

makes that the front, right? So it's really unfortunate, but that's what it seems like has occurred in this situation. In relying, at least in my opinion, while I think it makes -- you make a very valid argument, on the 1984 Mr. Wells' letter, I think the City, whether it was written or not, by issuing the permits in 2004 and issuing permits, subsequent permits, thereafter, have then -- have made the determinations looking at the code, saying, this is the City's position. And the position is that the front yard is the shortest -- the shortest part, that 75 feet. And therefore, the side yards are what they are today.

And it's -- you know, whether that's in writing or not, I think the issuing of the permit is what is in writing, right? Or, otherwise, it would never have been approved. Is -- yeah. That's the way that I see it, unfortunately.

MR. TALLMAN: I don't have anything new to add that hasn't already been said, so I'll entertain a motion.

MR. MADAN: I'll make a motion to deny the appeal. Recommend to the city council that the appeal be denied.

MR. TALLMAN: Is there a second?

MR. LAMAS: I'll second.
MR. TALLMAN: Okay. We got a motion and a second.
Call the vote, please.
MS. SERA: Before you call the vote, I just want to clarify for the record, by -- to make sure it's clear for everyone. By denying the appeal, then you are upholding the administrative official's decision and finding that the location of the front yard of the Esplanade property is on Falcon Avenue, and therefore all of the other setbacks flow from there.
MR. MADAN: That's what I -- that's my motion.
MS. SERA: Okay.
MR. TALLMAN: Erika?
MS. GONZALEZ: Yes. Vice Chair Madan?
MR. MADAN: Yes.
MS. GONZALEZ: Board Member Molina?
MR. MOLINA: Yes.
MS. GONZALEZ: Board Member Lamas?
MR. LAMAS: Yes.
MS. GONZALEZ: Board Member Valencia?
MR. VALENCIA: No.
MS. GONZALEZ: And Chair Tallman?
MR. TALLMAN: Yes.
MS. GONZALEZ: Motion carries, four to one.

MR. TALLMAN: Okay. So I guess process-wise, this is going to go to the city council, and the city council is going to be the final arbiter, based on our -- on our recommendation.

I only had one other thing before we call it a night, and that is to recognize that tonight is actually -- most likely is Board Member Lamas' last meeting with us because, unless we meet next month, he is going to become Councilman Lamas in April. So thank you for stepping up to be a councilman, and thank you for your service.

MS. VARGAS: I think you may be meeting because we do have a couple things, nevertheless.

MR. TALLMAN: Well, if something happens to me, I'm on the record now, so thank you very much.

Did anyone else have anything for the order?

MR. MOLINA: I move to adjourn.

MS. SERA: The council -- just to make it clear for the record, the council will consider this at their meeting of Monday, March 10th, at 7:00 p.m. At that meeting, they will either have the ability to affirm the board's recommendation or a member of the board -- of the council can request a hearing, in which case, if the council agrees, then there would be a hearing set for a separate date, and we would provide

notice.

And then I know, Mr. Chairman, you normally announce this about the appellant's right to appeal. The code provides the ten-day appeal process for an appellant to -- and appellant is defined in the code to include our appellants here today but a few other individuals who would have the ability to appeal, and they would have that right within ten days, not of tonight, but of the council's decision.

MR. MACHADO: Right. And just to clarify, that would be an appeal of the city council's decision?

MS. SERA: Correct. To the city council.

MR. MACHADO: To the city council.

MS. SERA: Right. Not an appeal to a circuit court. That's governed by --

MR. MACHADO: It's like Roger Goodell in the NFL, right? He issues discipline and gets a review. So thank you very much for your time. I appreciate it.

MR. URIBE: Thank you all.

MR. TALLMAN: Thank you. All right. We are adjourned at 9:20 p.m.

(Hearing adjourned at 9:20 p.m.)

CERTIFICATE OF DIGITAL REPORTER

I, JOSE PATINO, a Digital Reporter and Notary Public within the State of Florida, do hereby certify that on February 26, 2025 in Miami-Dade County, State of Florida, I digitally reported the proceedings had and the evidence given, and that said testimony was accurately captured with annotations by me during the proceedings, taken at said time and place.

I further certify that I am not related to any of the parties to this action by blood or marriage and that I am in no way interested in the outcome of this matter.

IN WITNESS THEREOF, I have hereunto set my hand the 4th day of March 2025.



Jose Patino
Notary Commission No. HH 604222
Commission Expires: October 17, 2028

CERTIFICATE OF TRANSCRIPTIONIST

I, SANDRA REDAVID, located in the state of Florida do hereby certify:

That the foregoing is a complete and true transcription of the original digital audio recording of the testimony and proceedings captured in the above-entitled matter. As the transcriptionist, I have reviewed and transcribed the entirety of the original digital audio recording of the proceeding to ensure a verbatim record to the best of my ability.

I further certify that I am neither attorney for nor a relative or employee of any of the parties to this action; further, that I am not a relative or employee of any attorney employed by the parties hereto, nor finally or otherwise interested in the outcome of this matter.

IN WITNESS THEREOF, I have hereunto set my hand this 4TH of March, 2025.

SANDRA REDAVID

SANDRA REDAVID

0

002(C)(85)
140:16

002(c)18(e)
29:6 66:5

002(C)85
55:18

03
52:21

04-0686
80:15,16
82:11

0400000606
62:15

0400000686
62:9

040000686
53:12
76:25

05-3118-016-
112:3

05-3118-016-1591
112:22

1

1
22:2,3
38:15
86:3
108:9
110:18
111:2
112:13
113:8,17

1.35
60:3

10
14:23
15:8 20:3
26:9
38:22
63:25
85:17,18
131:1
132:3

10-feet
16:1

10-foot
67:21
132:9

10.8
52:24

100
13:25
14:20
19:2
25:15
56:12,14,24 90:25
125:7

100-foot
67:22

10th
149:20

11
38:25
62:16,25

1101
72:19
98:8

1105
72:19
98:8

12
8:4,9
39:1
62:24,25
91:14,17
101:15

13
20:8,15
39:1
63:17
64:2,3
91:18
139:16

13.86
30:9

13th
14:17
47:6 52:3
57:25

14
8:4 39:2

14.7
60:23

14.75
53:8
76:21

15
15:22,24
20:1,8,14
26:8 29:2
39:2
139:16

15.09
30:6

150
12:23
25:12
56:12,13

150-
29:5
55:17
66:2,4
140:15

150-002(C)(1)
132:11

150-002(C)(85)
49:24

150-002(C)1
86:16

150-002(c)18(e)
42:3
65:23
66:20
94:12

150-002(C)85
56:25
57:9
66:10

150-002(C)86
55:25

150-020
69:1

150-029
142:21

1590
112:4

16
39:3

17
39:4
112:15
113:10

17-2
108:10
113:18

17.32
27:21

17.4
31:21

17th
37:13
79:10

18
39:7

18(e)
95:3,23

184
39:2

19
39:8

19.57
116:3

1940s
12:8

1947
13:4,16
25:7
26:25
31:2,19
56:16

1957
28:7

1977
29:5

1980s
24:5
43:20

1983
14:15,17
25:13
108:6

1983-4
27:7

1984
12:9
13:10
14:7
15:11
16:11
17:6,11
25:24
26:15
27:25

28:3,14,
20 29:9
30:24
31:9,20,
22 33:12,
16,17
45:25
47:6
51:3,4,22
52:3
56:22
57:7,25
60:8,24
61:6
65:19,24
66:23
67:8
68:22
73:4
79:10
140:24
144:6
147:5

1985
61:6

1994
7:25

19th
36:25
37:17

2

2
38:15
108:9
111:2
112:13,15
113:8,10,
17

20
31:18
52:21
60:3,23
75:11
80:24
115:21

20.032
76:16

200
10:17
13:6,17
15:7,20
25:4,8
26:1
40:21
50:3
52:9,12
53:16
54:10
55:6
56:15
57:1
61:8,14,
22 63:12,
18 65:25
66:22
67:16
68:1
75:22
76:6,9
98:15
99:9
100:11
108:24
110:18
112:8,12
118:6
119:7,9,
10,11
120:22
121:12,16
122:3
140:21
144:23

2003
63:11

2004
21:10,15,
16 27:7
53:3,22
62:7
63:21
64:2,9,
11,18,23
65:4,19
68:6,7
71:8 73:7
80:17
87:8
129:24
139:2
144:9,13
145:25
146:7,10
147:7

2005
63:14

2007
11:1,21

201
45:15

2012
32:25

2014
146:10

2021
26:20
64:11
65:1
111:25
144:16

2022
24:20
27:8,24
28:3
29:25
31:8,12
65:2
69:22,25
73:8
75:16
118:12

2023
70:2
112:19
113:4

2024
11:21
70:5,7

2025
37:1,13,
17

20th
15:11
21:16
51:4 57:7
59:22
61:6
65:24
68:22
80:17
112:19

21
55:13
73:6
138:22

211143
53:20
55:8
64:17
75:12

22
7:18
75:16

2201
115:3
117:1

23rd
16:11

25
11:20
14:3,5,24
15:8,21
18:7,18
20:2 26:8
29:1
30:11
31:18
43:22
61:20
91:13
92:21
116:10
139:25

25-
51:9

25-foot
18:8
57:12
59:1 60:6
73:11
125:20
126:5
139:4
141:24
144:8

25.14
20:7

27th
51:20,22
60:24

287
39:3

2nd
111:25

3

3
38:16

30
15:8,21
16:1
19:25
26:7
28:25
30:4
109:17,

18,19,21,
22 110:2,
8 115:12
136:10
139:17

30-feet
72:17

300
9:19
10:18
14:8,14
24:15
25:6
26:17
39:4
51:24
54:9 55:7
58:14
106:6,8,
12,14
108:8,20
109:3
110:24
113:4,16
120:12,20
121:10
122:2,11
124:18,19

32
20:7

32-year
49:13

33131
9:18

33166
112:9
113:5

35
24:2

35.26
20:7

36th
132:22

3rd
113:3

4

4
38:17

40
33:17
138:22

40-year-old
55:11

415
17:4 79:8

45
30:10

47
31:7

4th
14:15

5

5
38:18
146:5

5-foot
46:12
130:16

5-yard
130:20

5.3
60:18

50
12:23
25:12
30:7

501
72:10
98:2

517
72:11
98:2

58
108:10
111:2
112:13
113:8,18

599-77
39:2

6

6
38:19
62:16

6.29
21:4
139:24

6.3
20:17

6:06
4:3

7

7
38:19

7.5
64:25
141:14

7.6
33:6

7.68
27:15,18
64:24

70
8:19
76:21

75
13:25
14:20
19:2 20:4
25:15
56:23,24
64:1
94:2,3
125:6
129:9
147:11

75-foot
146:25

750-89
39:3

7:00
149:20

7th
17:10
60:8

8

8
38:20

8.9
52:25

83
19:3
47:10

84
15:4
18:25
19:6,9,10
25:13
47:10,11
128:18
145:24

85
95:21
135:14

86
50:23
95:21

87
95:22

8th
61:5

9

9
38:21

90-95
29:14

900
96:8
97:15

901
72:14
98:6

903
72:14
98:6

90910
72:3,7
97:12

91
61:17

910
96:10

94
8:20

98
9:17

9:15
143:19

9:20
150:21

9th
108:5

A

A-R
17:15

ability
42:4
66:21
69:14
141:14
145:9
149:21
150:7

absence
125:17

absolutely
23:15
36:2
77:16

abstract
54:4

absurd
33:19
139:8
140:23

abuts
55:15

abutting
19:17
29:7 95:9

accept
69:9

acceptable
36:16

accepted
52:3
59:23
61:2,9
114:13

access
97:16

accessory
11:14
14:21,22
15:3
17:11,19
18:4,5,
15,16,19
19:5,9
21:4,6,
18,25
22:5
41:3,9,
10,12,16,
19 44:1
58:24
59:24
60:10,17
62:1
63:13
75:19
76:3,12,
17 78:6
82:21
83:14
84:1,4,5,
7,10,16,
18,20
85:3
86:15,17,
23,25
87:8,15,
19,23
93:2
114:12,14
129:25
130:2,3,
8,15,20,
24 131:1,
10 132:2,
7,12
146:5

accompany
102:12

accomplished
25:18
28:11

account
35:21
144:13

accounting
24:12

accurate
108:18

accustomed
84:7

achieve
103:10,13
105:20

achieved
47:13

achieving
15:10

acknowledges
12:24
13:16

act
137:23
138:3

acted
137:18

acting
127:5
133:5

action
138:11

actions
144:6

actual
38:14,15
39:23
40:5
57:23
58:3
69:23
78:20
90:19
136:10
143:24

AD
22:2 86:3

add
125:1
132:10
147:19

added
11:10
22:14
130:7

addition
10:3
11:24
21:11,14,
16,23
22:2,4,14
24:21
26:22
27:14,16,
22,23
29:21,25
30:12
31:8,17
32:3
33:2,6
34:22
35:9 36:7
53:4,15,
18,19,22,
23 62:8,
15,18
63:15,22
64:2,6,
18,21
65:8 67:5
68:7 70:4
73:7
77:5,11,
20,21
79:25
80:2,12
81:17
84:12,13,
17,19
86:2,4
87:7,8,9
108:10
112:13
113:9
129:23,24
132:5
141:5,22
144:15,16

additional
15:4
32:14
144:12

additions
68:18
77:14

address
65:20
68:21
81:19
112:7
113:4
125:4
139:10

addressed
31:4,16
32:6 90:3

adhere
12:11
44:5

adhered
28:19

adhesion
68:2

adjacent
24:21
29:22
31:24
32:5
55:19

66:12
94:15

adjourn
149:17

adjourned
150:21

adjustments
29:17

administrative
24:18
68:9,13
70:25
71:3
110:13
142:8,18
146:20
148:8

admissions
22:6,18
38:23

admit
131:19

admits
121:25
125:23

admitted
133:20

adopted
28:6 29:5
62:3

adoption
44:19

advance
38:4

advantage
32:20

advised
15:6
51:14

advises
58:9

advising
51:21,22

advisory
55:12
57:6,19
139:5

aerial
10:10,11
11:1
21:21
61:10,11
64:11
70:1

aerials
7:23
114:10

aesthetic
34:10

affect
10:6

affected
10:3
32:12,17
90:19

affects
131:25

affidavit
18:3

affirm
149:22

affirming
39:5

afternoon
23:16

agenda
4:17

agree
79:16
88:21
90:15
91:24
101:15
102:1
124:15
129:6
133:8
135:6

agreed
58:16
145:9

agrees
31:5 86:1
149:24

ahead
6:18,22,
23 7:7,9,
13,14
8:10,17
20:25
74:2,6,18
75:25
80:7
139:3

air
10:6
34:15
35:7

Akerman
9:17

Alejandro
55:2

Alex
40:10

allegation
17:1

allegations
118:5

alleging
119:14

alleviate
90:13

alley
85:13,14,
15,16

allowed
16:20
30:5
33:20,21,
22,23
63:2
64:24
67:13
73:7,8
135:22
136:25
140:20
141:16,
20,23
144:6

allowing
34:2
63:23
144:15

alluded
65:11

altered
14:4
26:23,24
44:17

alternative
40:2
91:12
92:10,20
102:6

aluminum
10:23
11:13
21:17,19,
21,24
34:14
62:12
77:6
81:13,15
82:15,17,
18 130:4

American
49:8,9

amounts
73:16

angled
64:6

announce
150:3

answers
54:5

Antonio
37:13

apparently
86:1

appeal
36:24
38:2,10,
13,15
55:5
57:16
58:19
60:13,16
69:18
70:5,19
71:4 74:1
110:13
127:21,24
128:25
147:23
148:7
150:3,4,
7,11,14

appealing
40:24
64:17
70:25

appeals
141:8
142:5

appearance
34:10

appearances
36:13

appears
76:9
91:25
92:15,25

appellant
57:6,12, 16 58:18
60:13
62:23
64:17
65:20,22
67:9,24
68:22
69:13,21, 23 70:9, 14,20
71:14
72:2
73:3,9,18
119:14,23
150:5

appellant's
51:15,16, 18 58:12, 14,21
59:11
61:4,10
62:18
63:11,18
64:8,22
65:8 69:5
120:8
136:15
150:3

appellants
150:6

applicable
47:15
84:3 85:3

applicant
12:14
15:15
55:11,14
66:17,19
68:9
69:18
78:14,15
80:25
81:9
82:24
83:17
88:9
89:13
128:12
137:23

applicant's
66:17
71:10
138:3
146:11

applicants
89:5

application
12:15
14:19
18:2,3
25:14
27:20
39:7,10
40:7
79:10
80:16
81:8,10, 23,24
82:1,2
83:18
106:2
131:17
132:24
144:14

applications
88:19

applied
13:11
34:6 47:5
65:2,3,15
71:9
95:20
105:25
132:25
144:22
145:7

applies
28:7

apply
29:14
33:13
59:16
68:13
135:1,7

applying
89:14

appraisal
6:23

appraiser
25:3
38:18
85:21
130:5

appraiser's
22:1

approach
134:5

approaches
102:7

appropriately
31:16

appropriateness
24:17

approval
4:18
14:16
17:6
28:17
31:12
32:1
33:10,12, 13,16
43:9
57:18,20
63:4
68:23
69:1,3,5
103:18
104:16
107:9
114:15
118:14,16
119:19
133:6

approvals
32:24

approve
4:20 44:9
51:24
59:19
77:4
117:15,16

approved
7:13,14
20:25
21:14
25:19
27:10
30:12,16, 18 31:21
34:1 44:7
45:1,22
57:24
62:14
63:5,7,20
64:7 68:6
69:22
73:8
117:8
118:12,16
119:24,25
120:1
138:8,12
147:17

approving
27:12
32:21
63:21

approximately
30:7

April
21:16
80:17
112:18
149:9

arbiter
149:3

arbitrarily
33:18

architect
7:7,9 9:7
22:11
27:8
30:12
65:12
78:9
110:5
119:18

architects
78:7
79:21,24
80:4 81:6
83:4
88:7,21, 22 89:16

architectural
49:6

area
11:14,22
17:20
22:13
31:24

35:16
44:2
53:24
62:22
63:23
65:7
68:16
133:11,12

areas
8:20 16:6

arengas
34:18

argue
40:7
128:2

argued
94:13
109:23

argues
57:6
65:22
68:22

argument
21:8 67:9
69:6
91:22
96:4
98:21
137:15
144:3
147:5

argument's
66:16

arguments
65:20
140:7,11
143:16

arises
7:19

aspects
136:11

assertion
144:10

assessments
16:13

assist
105:22
107:21

assume
66:20
143:11
144:9

assuming
119:1,20
133:6

assumption
89:11,20

assumptions
100:18

asterisk
105:21
107:21

attached
52:8,10,
11 84:11,
19 131:2

attempt
95:16

attorney
9:20
16:10,14
40:10
47:3
120:10

audited
22:20

August
14:15
47:6 52:3
57:25
111:25

authority
65:24
67:7,10
68:5
142:12
144:18
145:6

authorizes
142:15

avenue
9:19
10:18
11:6 12:2
14:8
15:23,24,
25 17:3,9
19:21
22:9
24:15
25:7,22
26:8,18
27:1
30:2,6
31:14
51:25
55:7
56:13,23
57:2
58:14
59:10,16
62:6
63:23
64:13
65:5
67:14
68:6
72:3,14,
19 73:1,
6,25
96:8,10,
25 97:11
98:6,8
100:3,5,7
106:14
108:9,15,
21 109:4
110:24
113:5,16
115:7,18,
21
120:12,13
124:10
136:6
148:10

aware
31:9
75:12
78:4
102:11
105:24
108:23
109:2,5,6
110:12,15
118:19
133:1

awning
83:6

Aye
4:24,25
5:1

B

B-
79:7

B-415
75:18
76:2
79:11

bachelor
49:6

bachelor's
24:11

back
7:17,25
8:20
11:11
12:8,17
14:6 17:8
18:5 20:8
21:14
26:25
28:25
39:19
41:7,11
42:10
43:19,20
46:4,15
59:15
65:19
67:12
70:17
78:19
79:1 91:8
92:19
93:21
98:19
99:7,9,11
100:14
101:9,14
102:4
104:21
106:11
111:4
114:22
123:1,5,
13,14
126:2
135:4
136:4
137:17
140:24
145:15
146:16

background
6:11
24:23
28:5 56:9

backyard
33:6
34:13,25
35:13,19,
22,24
36:5

barbecue

35:11

Barely
12:1

based
30:25
42:9
53:22
85:20
96:18
97:17,19,
24 105:12
126:10
136:4
144:10,20
145:8
149:3

basic
30:22

basically
15:14
24:3 25:2
38:7 77:6
80:4
90:11
119:7

basis
73:21

bathroom
67:16

battling
90:17

Beach
24:3

bear
106:7

bedroom
67:15

bedtime
138:16

begin
14:8

beginning
21:22
123:10
128:16

begins
94:18

behalf
9:10
40:10
55:3
73:22

believes
73:2

benefit
67:23
135:25

Bennetti
5:9 37:1,
10,11

big
24:13
89:11

Bill
4:4 6:8

binder
37:22,25
38:6
104:9

Bird
24:8

bit
6:11
17:14
19:14
24:24
28:24
54:3
60:15,16
61:15
64:22
80:22
85:15
93:18
107:5

block
16:4
21:17
35:5
108:10
111:2
112:13
113:8,18

blocked
34:15

blue
67:19
97:21,23

Bluebird
72:19
98:8

board
4:9,11,13
12:18
23:16
55:2,4
88:21
103:17,23
104:16
106:16
107:9
117:20
143:23
148:17,
19,21
149:7,23

board's
149:22

book
9:4 24:1
25:1
108:10
112:15
113:10,18

books
39:18

bottom
63:4
92:1,11,
16 104:20
105:5
116:8

bought
6:21 8:8,
13 32:25
34:16,19

boundary
45:21
93:19

box
94:25
103:16
104:15

boy
80:13

brain
109:13

break
106:19

briefly
9:23
16:18
40:11
139:9

bring
34:11
69:20
115:2

brought
78:15
110:13
130:17

build
10:7
12:16
32:14
110:1,8
128:5,19
143:2
146:16

buildable
12:10
19:2 58:7
124:8

building
14:10,18
15:5 16:3
17:4,8,
11,20,24
18:5,7,
13,16,17,
19 19:3,7
21:10,18
22:2,7,18
24:20
25:25
26:11,16,
21,23,24
27:14
28:20
29:10,11,
18,21,24
30:24
31:8,20
32:2
34:22
38:17,24
41:16,19
44:3 46:7
47:12
51:1,15
52:17
57:7
58:13,25
59:14,22,
24 60:10,
18,22
61:14,20
62:1
63:14
65:23
70:19
74:11
75:5,6,

10,19
76:3,12,
17 77:14,
19 78:4,
20 79:5,
7,9
80:14,16,
22 81:21,
22 82:1,
4,7,11,
16,21
83:14,23
84:1,7,11
86:9,15,
17,18,19,
23 87:1,
8,14,15,
19,23
91:23
92:25
93:5,8
98:19
108:16
109:10
110:9
114:10,
12,13,14
117:5
118:23
125:24,25
127:4
128:5
129:7
130:2,3
131:12
132:12,
14,17
133:5,11,
12,23
142:16,25
143:1
145:24

buildings
84:4,5
87:16

built
10:25
13:5,7,18
25:8
31:2,17,
18 39:4,
16 56:16
73:7
119:8
121:23
130:10,18
131:11
141:23,24

business
24:12

button
118:1

buy
36:3

C

call
4:3
47:20,21
62:11
64:12
77:7
136:5
148:4,5
149:5

called
128:17

calling
4:2
65:13,14

canopy
34:14
83:5

canvas
115:25

care
90:7
143:2

career
49:13

Carlos
37:16

carport
21:16
81:17

carries
148:25

cars
22:17

case
11:18
15:18
22:6 26:4
27:12
31:7
36:23
39:13,21
68:1,12
74:3,4
89:7,18
93:10
105:23,25
107:22
120:15
121:18
128:2
133:7
134:6
137:3
144:11
145:4
146:24,25
149:24

cases
29:14
71:23
128:3

Catch-22
140:18

CBS
22:16
46:3 53:5
81:15
82:19

CCE
108:10

center
112:11

certifications
49:4

certified
45:14
46:1
49:8,9,10
57:23

chair
4:4,7
148:15,23

Chairman
150:2

challenge
70:18,21
71:2

challenged
71:12

challenges
71:3

chance
86:10

change
22:9 27:7
33:18,25
42:14
55:24
56:3 64:3
66:6,14
67:1,10
68:14,17,
18,20
69:10,15
73:3
108:24
109:3
121:8,12
137:6

changed
20:21
28:3
67:11
68:15
126:15,16
131:7,8
135:20
137:20
140:2

changing
31:11
66:25
68:17,20
73:21

chapter
44:18,19

characterize
57:17

check
32:21

choice
35:4

choose
24:13

chose
6:13 8:11
70:21
110:5

Chris
39:9
65:2,7

Cinema
108:10
112:13
113:8

circled
27:17

circuit
150:14

circumstances
68:14

cite
17:3
128:3

cities
80:25

city
7:5,10,11
9:2,4,6
13:15
14:4,10,16 15:14
16:8,10,14,25
17:1,7,18
18:16
19:19
20:21
24:19
25:14
26:15
27:24
28:20
29:4,5
30:18
31:9,22
32:21,22
33:3,9,15,17,23,25 36:13
38:9,13
39:5,18
40:1,10
44:15,22
45:15,17
47:3,22
49:16,18,20,23
51:23
53:23
55:3,5,9,14 57:23
59:4,5,13
62:5 63:4
64:11
65:2,4,10
66:3
68:5,25
69:8,11,19 70:15,17,24
71:1,9,18
73:5,13,22,24
75:3,13
78:10,13
79:9
80:5,15,18 81:18
82:22,24,25 83:16
85:25
86:15
87:5,24
88:2,5
89:2,5,12
90:8,21
97:21
118:14,15,16,21,25
119:19,21,24
121:3,25
125:23
126:8,16
127:4
130:17,23
137:7,15,23 138:3,8,11,13
139:1,10
140:20
141:7
143:10
144:7,18,21,24
145:4,5,9
146:6
147:6,23
149:2
150:11,12,13

city's
13:24
20:12,18
25:11
29:24
33:12,13
36:8
39:14
47:21
55:6
58:19
59:8
139:13
144:5,14
147:10

claim
21:11
22:8
112:18
113:1

claimed
129:6

claiming
131:16

claims
16:8 17:7
18:16
20:21
62:23

clarify
148:6
150:10

clarifying
89:20

clarity
125:1

claustrophobic
12:3

clear
17:13,14
20:19
37:25
58:22
88:4
114:12
138:4,5
140:2
143:12
148:7
149:19

clearer
61:17

clerk
5:4 45:17
81:1
102:16
103:24

Clerk's
39:5

clerks
81:6
83:3,17
88:6,7
89:15

click
43:21
46:16

clicker
80:13
114:18

client
9:18
79:24

client's
40:20
139:21,23

close
10:7 12:3
18:11
34:7
35:9,14
43:17
70:5
136:9
145:15

closely
14:1

closer
8:14,15
11:10

closest
92:22
93:1 94:2
109:25
135:15
136:16

Club
112:14
113:9

code
11:20
12:11,19
13:2
16:14
19:13,15
28:6,15
29:5,9,12,13
30:18
33:2,20,21,22,24
34:11
36:9 39:1
41:13,24
42:2
44:15
49:23
50:15,20
55:9,17,23 65:3,

6,16,17
66:2,24
68:2 69:9
70:24
72:25
74:1 85:4
86:15
87:5
90:21
99:22,23
101:1,3
110:12
120:2
121:19
122:19
125:8,9,
10,14
127:8
130:10,23
131:5,6,
11
132:18,21
133:3
135:2
136:21
137:4
138:2
139:12
141:7
142:1,9,
11,13,21
143:2,24,
25 144:1,
20,21,24,
25 145:6
146:23,24
147:9
150:4,5

codes
44:22
95:15
133:15
134:24
135:6
139:11

cold
48:1

columns
62:13

combined
120:15

comfort
36:12

comments
89:22
127:14

Commission
28:7

committing
134:2

common
71:1
99:25
101:4
143:23
144:1
146:13

communities
28:13
48:23,25

community
6:17 10:8
28:10

company's
18:3

comparable
71:16

compare
11:21

complaining
69:21

complaint
70:16

completed
70:8

completely
34:8,12
132:8
140:23

compliance
13:18,19
19:24
141:15

compliant
20:9,15,
16,17
22:10
120:5
144:25

complies
65:17

comply
15:18
33:2
65:16
128:8
130:21

concede
131:19

conceding
140:25

concern
145:12

concerned
36:20
90:20

concerns
10:5
35:9,12

concession
121:4

conclude
47:4

conclusion
30:21

concrete
21:17
22:16
36:4
62:13
90:12
115:17

condition
22:24
23:1
30:12
32:1 58:3
64:9
122:1
126:17

conditions
16:17,18,
22,24
19:7
26:14
27:25
28:17
30:16
33:10,13
43:9
45:24
46:7
47:4,14
52:5 58:1
68:23,25
69:12

configuration
59:7
71:23

configurations
54:12

confirm
44:24
59:21
62:4
87:14
89:8

confirmed
60:5
104:19
105:4
121:11

confirms
113:15

conflicting
134:25

conflicts
33:10

conforming
17:25
18:14
20:24
105:7
143:5,14

conforms
137:7
139:15

confused
78:18

confusion
124:23

conjunction
47:2

connection
17:5,23
55:8

conservative
134:5,13

considered
54:1
55:19
63:6
66:12

consistent
18:21
21:5,7
44:25
47:8,14

55:8
60:19
63:19
76:22
92:11
98:14
105:17
116:12
124:6
126:19
128:2,14
130:16
133:25

consistently
34:6
100:24
133:16

constitutes
68:23

construct
13:12,13
26:22
33:1,5
58:13

constructed
10:24
24:21
26:17

constructing
35:6

construction
14:8,11
51:24
61:5,11,13 64:10
69:25
71:6
75:10

construe
134:13

construed
95:4

contacted
90:4

contemplated
59:4

contends
19:19

contention
18:9 21:9

contents
38:6,14

continue
34:24
35:23
74:6
105:1
106:23
136:25
137:24

continued
114:14

continues
95:6,7,10,11

contractor
75:11
118:18

contractors
88:8
119:20

contrary
57:8

contribute
6:16

contributions
49:12

control
107:14

convenience
36:12

convenient
28:14

conversation
89:25

converted
44:16

cooperate
80:14

coordinator
24:7

copies
74:3

copy
37:25
45:14
81:2,4,5
83:17
88:11
89:14
93:11

corner
7:11
10:12,13,16 11:14
19:16
25:20
29:3,6,15
42:15
45:19
50:2,12,13 55:18,24 56:3,22 57:5,14 58:10
60:9 65:6
66:7,15
71:20,21,25 72:4
73:24
94:14
95:7 96:6
100:22
105:22
124:12
125:7
126:21
133:24

corners
7:1 9:9

corny
90:9

correct
23:9
39:25
41:1 42:5
44:23
45:3
50:8,13,14 51:12,18,19
55:4
66:18
69:19
73:23
85:1
87:3,5,17
88:10
92:8 93:3
95:1
100:3,12
103:3
109:4
112:23
113:18
115:19
121:1
140:13
150:12

corrected
101:24

correcting
89:11

correctly
65:3
107:20

correspond
102:18

correspondence
5:11

council
31:22
69:1,2,8,11,16
103:17
104:16
107:9
147:23
149:2,3,18,19,23,24
150:12,13

council's
150:9,11

councilman
149:9,10

Counselor
37:3

count
33:16

Country
112:14
113:9

county
24:3,4
28:6,7,15,17
29:4
30:22
49:1
84:12
85:24
86:1
112:16
113:11
128:4

countywide
28:8

couple
6:13 8:16
40:13,15
74:17
91:10
113:21
117:21
149:13

court
7:1
150:15

cover
115:25

covered
116:9

create
12:10
14:25
15:1 19:4
20:20
34:3
35:24
44:5,10,
12 46:23
122:20
137:11,
13,17
138:10
142:24
143:14

created
11:17
29:25
31:15
45:1 54:8
56:21
72:10,12,
23 122:16
137:22

creates
44:7
138:1

creating
21:1
136:14

criteria
23:6
39:19

critical
16:13

cross
74:8
77:25
87:14
91:5

cross-exam
40:14

CROSS-EXAMINATION
40:17
78:2
91:19

crosses
13:25

crosstalk
146:20

crux
15:22

current
25:2
56:12,21
64:10
73:21
75:5
118:10
131:3,5,6

cut
7:1,11
9:9 63:3
103:9,12
105:15,18

CV
38:16

CVS
52:16
53:5 60:2

D

Dade
49:1
128:4

dais
23:12

dash
14:1
92:21

dashed
13:24

data
22:7 27:9
30:14

date
51:23
52:3,8
75:15
149:25

dated
17:10
36:25
37:13,17
47:6 57:7
70:1
79:10
108:5
111:25
112:18
113:3

Dave
108:5

David
14:9
20:18,21
46:8 57:8
60:12
137:15
138:20

day
7:5 72:24
88:19

days
150:8

deal
39:20
79:24
100:21
136:21
137:4

dealing
90:2
137:12

Dear
108:13

debate
71:5

December
26:20

decided
6:15

decision
20:24
43:11
55:4 69:6
73:23
131:25
142:18
148:8
150:9,11

decisions
70:25
71:3

deductions
145:22

deed
110:18
112:18,20
113:1

deeds
111:16,24
113:14

deemed
16:22

deep
67:25

deeper
57:12

default
122:1

deficiency
32:5

deficient
20:25
30:14

define
95:22
99:18
132:18,22

defined
94:23
95:25
132:23
133:3,22
150:5

defining
133:11

definition
42:10
50:22
86:15
87:5,15
94:18
100:25
127:8
132:12,23
134:22

definitions
55:17

94:12
95:3

delivered
37:22

demands
65:16,17

demo
17:24
18:4,9
19:9
47:10
114:11

demolish
17:24
58:23

demolished
18:14,17
46:5,6
59:1
61:20
92:17
93:6,9
94:9
105:6

demolishing
18:4

demolition
17:4,11,
19 18:10,
21 40:4
41:6
46:12
60:9,11,
17,21
61:3
75:18
76:3,23
79:17
91:24
92:9,12
101:17
114:13
144:7

deniable
36:7

denial
55:5

denied
147:24

deny
74:1
147:22

denying
148:7

department
80:23

depend
110:5

depending
20:1
85:13

depends
99:18
110:3

depicted
102:14,15

Deputy
45:16

describe
10:23
34:22
107:3
131:14

describes
78:5
101:17

description
112:11
113:7

design
35:20

designation
33:25
84:20
127:6

desirable
134:20

desk
6:9

desperately
34:17

detached
86:18
87:4
132:13

detail
62:10

detailed
24:25

determination
24:18
27:6
33:17
42:13,19,
20,22
66:23,25
67:8
68:20
69:4
110:13
126:8
133:24
145:8

determinations
144:19
145:10
147:9

determine
42:4
50:17,20
55:14
65:25
67:14
105:13
133:20

determined
19:17,20,
23 25:17
29:8,11
67:3
71:24
95:12
126:6

determining
16:7
95:24

development
24:7
28:12,19
30:22

deviated
23:2,4

deviation
68:25
103:16
104:15
107:4,8

diagram
38:22
43:22
92:17,21
94:6
96:18
97:19,24
101:14
102:4,6,
24,25
103:9,12
104:6
105:15
111:5,7
117:10
122:16
123:1

diagrams
38:12,19
91:12
102:14
104:7
107:4
122:5

dictates
125:11
135:14
144:11

differently
50:17
79:22

difficulty
115:23
137:12

diligence
9:5

dim
10:15

dimension
50:7,8,9
53:1
55:20
57:10
66:13
72:4,9,
18,22
76:15
94:16

dimensions
57:4,5
58:6

diminishes
36:7

DIRECT
6:6 23:23
48:13
74:24

direction
35:12

directly
122:17,
18,19

director
19:18,20
29:9
42:4,12,
21 66:6,
9,14,24,
25 67:6,
13 68:15,
19 69:8,
10,14
73:2
95:13
127:3,5,
9,11
132:17

director's
133:4

disagree
79:21

disagreement
90:18,19

disagrees
66:4

discipline
150:17

disconnected
117:24

discretion
94:14
133:23

discuss
16:17
40:2
101:3

discussed
96:4
102:7
133:19

discussing
93:2
101:3
107:1,2

discussion
134:10

disfavored
44:21
137:21

dispensed
20:22

dispute
82:10
83:13,22,
23 84:23,
25 85:20
86:3,6
87:15

disputed
144:16

disregard
143:11

disregarded
43:10

disregarding
32:23

distance
8:6,14

distant
56:1

district
19:25
25:12
109:11
130:24
132:22

districts
109:13

divide
133:17

DL
82:16

document
13:23
14:3
27:12
45:9,12,
23 46:1,
10 47:3
52:6
59:9,13
75:21
76:5,13
78:9 79:8
80:15,17,
19 81:8,
14,16
82:22
83:23
86:4
87:22
89:12,19
103:3,25
106:4,7
118:4
126:11,
23,25
137:19

documentation
19:11
27:23
38:11
126:23

documented
28:2 43:8

documents
12:8
22:6,12
38:7,17,
18,21
39:8,15
43:16
57:24
104:5
106:17
121:8
127:22
131:18
143:9
146:8

dominant
86:22

door
69:24
70:11
72:5,19,
23 79:23
80:1
99:15,20,
21 100:1,
3,5,6,9,
11,13,22
101:4
115:11,17
116:16
121:23
122:23
129:14
146:22

doors
100:15

double
6:24

doubt
62:5

Dove
72:14
98:6

drain
35:7

drainage
35:18,22

drawing
62:24
93:11
116:8

drawings
63:19

dreams
35:24

Drive
13:17
15:20
24:9 25:8
26:7 29:1
31:4
45:15
50:3
52:9,12
53:16
55:7
56:14,17,
18,23
57:2,11,
15 58:10
65:25
66:1,22,
23 67:18
68:1
72:7,11
97:12
112:8

driven
128:24

driveway
10:20
22:16
72:16
115:16

driveways
101:5

due
9:5 39:23
146:18

duly
5:19

duty
34:4

E

earlier
90:3
104:19
105:4

Earth
36:3
63:16

easier
40:5

east
52:23

edition
71:8

effect
13:2
29:10
44:15

electrical
29:20

elevated
8:17

elevation
115:9,11

email
39:5

emotionally
128:24

emotions
32:13

emphasis
136:17

empty
63:13

EN
22:3

enclosed
62:11
108:17

enclosure
22:3
130:4

encourage
136:23

encroach
7:21

encroaching
141:24

encroachment
27:22

encroachments
16:5
26:10
31:25
58:15
59:25

end
54:15,17,18 62:16
72:24
115:2

ended
61:23
125:18

enforce
40:4

enforced
32:2

enforcement
144:8

engineer
78:11

Engineering
78:17,25

engineers
88:8
89:16

enjoin
40:3

enjoy
36:2
67:24
139:4

enjoyed
71:14

enlargement
92:3

ensure
34:5

enter
37:20
74:2

entered
38:1

entertain
147:20

entire
35:16
47:2
58:24
60:17
71:13
117:1
121:17
132:21
143:13

entitled
73:18
79:9
139:10

environments
28:13

equally
33:3
36:19

Erasing
23:7

erected
44:16

Erika
9:14
148:14

erroneously
30:2
31:14

error
23:2 32:3
39:25
82:25
83:2
88:17
89:18
119:25
120:1
131:13,16,19,23

errors
131:14,15

Esplanade
6:12 8:7
10:17,19,20,21
11:6,7,23,25
12:25
13:1,3,6,7,17,20
14:14
15:7,20
16:9 17:2
20:6
22:13
24:22
25:5,6,8,13,19
26:1,6,7,20 27:1
28:1
29:1,21
30:24
31:1,4,19,23
38:17
40:21
50:3
52:9,12
53:16
54:10
55:7
56:14,15,17,18,23
57:1,2,11,14
58:10
61:8,15,22 62:8
63:12,19
65:25
66:1,22
67:12,16,18 68:1
75:22
76:6,9
98:16
99:9,14,22 100:1,9,11
106:6,12
108:25
110:20,21
112:8,12
119:10,11,12
120:17,21,22
121:6,12,17,22,23,25 122:1,3,21,24
123:17,22
124:1,13
125:7,15
126:7,21
139:18
140:22
144:23
148:10

essentially
133:5

establish
40:15
54:5
55:16
58:5
66:21

established
28:9
31:3,19
57:8

establishes
90:21

estate
9:21

Estates
112:14
113:9

evening
6:7 9:13
23:16
40:9

event
67:1
134:11

events
35:19

everything's
119:17

evidence
27:19
30:17
37:23
40:6
60:20
71:11
83:7,22
88:16,18
89:17
111:16
113:15
126:10,20,24
136:4
137:19
138:19
143:9

evolved
60:15

EXAMINATION
43:4
46:18
48:13
74:24
86:11
113:25
117:13

examples
96:3
98:10,22
100:14

exceed
142:3

exception
14:5

excerpt
13:15

excerpts
15:12

exclusion
133:18
134:2

exclusively
113:16

excuse
5:21 58:8
67:22
117:15
140:10

executed
45:15

exercising
144:18

exhibit
25:1,23,24 27:15
28:23
30:13
110:18

exist
127:7
139:6

existed
64:9
110:4
125:4
142:22

existing
13:13
14:2,12
15:17
22:15,16
26:6
30:11,16
64:20
86:19
99:4
122:4
123:14
135:21
136:18
140:8,12

exists
13:6,17
19:15
40:20
56:15
140:25

expand
67:18,20
136:24
141:9

expansion
67:17
141:6

expense
67:25
73:10,15

experience
24:2
44:13
49:2

experienced
35:20

expert
9:22
22:22
43:15
44:20
47:1
75:23
85:19

experts
79:22

explain
9:23
13:22
123:5

exposed
34:24

express
31:12
68:23
70:24
125:1

expressly
30:18

extend
11:12
141:11,12
142:2

extended
11:13,23
110:9

extending
94:19
95:25
97:3

extends
94:1

extension
130:7

extent
102:9

extra
35:4

F

face
69:13
139:15

faces
16:9
99:4,12
100:23

facing
15:20,23,25 16:8
22:13
26:8
56:17
57:14
58:20
72:23
98:20
99:7,15,21 100:7,9,11
101:5,6,7,8
121:23
123:17
125:22
139:18

fact
22:23
38:23
69:6 73:5
89:17

101:25
131:18
136:21
139:1

facts
28:4
130:6

fail
32:21

failure
12:11

fair
53:23
70:15

fairly
34:6

falcon
8:3 9:19
10:18
11:5,10
12:2 14:8
15:23,24,
25 16:8
17:3,9
19:21
20:14
21:12,13
22:9
24:15
25:6,7,
21,22
26:8,12,
16,18
27:1,3,
15,17
29:1,2,22
30:2,6
31:14,24
32:5 39:4
51:25
54:9 55:7
56:13,23
57:1
58:14
59:10,16
62:6
63:22
64:13
65:5
67:11,14
68:6
73:1,6,25
100:3,5,7
105:8
106:14
108:9,15,
20 109:3
110:24
113:4,16
118:6
119:7,12
120:12,
13,20
121:10
122:2,11
123:23,
24,25
124:11,14
125:6,18,
22 126:22
135:20
136:6,8
139:15
148:10

falls
132:5

false
32:19

familiar
53:12
60:2
76:25
85:2

familiarity
117:9

family
7:6 13:4
25:11

farthest
50:24

fathom
35:2

favor
4:23 34:8

favored
24:14

features
34:11

February
36:25
37:13,17

feel
12:4
104:11
119:24
120:1
136:2
143:25

fees
118:20,24
119:21

feet
10:4
11:20
14:3
15:21,24
16:1
18:7,12,
15 20:4,
7,8,16,17
21:3,4
25:12,15
26:7,8,9
27:15,19
28:25
29:1,3
30:4,6,9,
11 31:21
33:6
41:22
43:22
52:21
56:13,14,
23,24
60:4,18,
23 61:20
62:16,24,
25 63:1,
17 64:1,
2,24,25
67:18,20
85:13,16,
17 91:13
92:22
94:2
109:18,
19,21,22
110:2,8
115:12,21
116:4,10
125:6,7
131:1
132:3
136:10
139:16,
17,24,25
141:14
146:5
147:12

fellow
49:9

felt
34:24

fence
34:16,18,
20,25
35:23
63:18
94:5

Fernandez
5:13,16,
18,23
6:1,3,7
74:21,22
75:2 78:4

Ferreira
9:19
24:15
32:11,18
98:20
99:8
113:2,3
139:4

Ferreira's
13:14
16:5
61:21
92:22
93:1
98:17
99:4,12
109:25
114:15

figure
128:17

file
13:24
14:4
20:10
21:2 27:6
36:23
37:5,6,24
46:24
47:2 70:4
71:4
102:12
108:23
117:1
128:15
145:24

filed
25:14
26:21
39:6
60:16

files
76:9

final
19:1

47:11
83:20
110:11
149:3

finale
68:13

finality
68:10

finally
18:25
71:16

find
27:5

finding
24:16
148:9

findings
43:16

fine
55:1
58:16
143:1

finish
74:11,16

finished
7:18
101:11

fire
35:10

firm
9:20

five-foot
41:9

five-minute
106:19

fixes
72:25

flat
68:24

flexibility
50:16
55:22,23
56:2
66:5,8,14

flip
78:19
107:13

flood
8:18
129:10

flooding
35:13,20
90:10,14
129:8,18

Florida
9:18
24:4,11,
12 39:7
44:13
45:16
79:9
112:8,16
113:5,11
122:19
128:2
134:3
137:10

flow
148:11

flowed
127:11

focus
13:21
15:11
18:11
134:1

folio
112:22

follow
8:21 9:1
45:5
86:13
100:25

follow-up
45:6

Fontainebleau
128:3

foot
14:24
15:22
18:18,20
20:2,14
27:4,21
31:18
41:3,10
51:10
56:13

footprint
7:20,24
8:6
144:15

footprints
70:3

foreground
64:8

foremost
143:20

forever
66:23
67:3,4

form
139:7

formal
34:1
71:21

forming
50:12

forward
62:4,7
64:13
114:14

fought
6:18

found
7:4 13:23
27:19
60:21

fourth
15:13

frame
131:24

Francisco
5:18,23

Frank
5:25

frankly
65:11

free
104:11

front
10:19
11:5,6
13:1,2
15:7,21,
24,25
16:7,8,9
17:3,8
19:14,16,
20,25
20:6,7,14
21:12,13
22:9,13,
17 23:8
26:7 27:2
28:25
29:6,7,19
30:3,5,15
31:2,3,
13,15
33:25
42:5,8,14
50:2,5,
17,24
51:2
55:18,19,
24 56:1,
17,25
57:9 58:9
59:17
62:5
63:22,24
64:12
65:4,13,
25 66:2,
6,8,9,11,
15,22
67:10,14
68:3,5,15
69:4,7,15
71:25
72:4,8,
13,17,21
73:1,3,5,
24 79:23,
25 94:13,
18,19,22,
23 95:4,
8,20,22,
24,25
96:21
97:12,22,
23,24
98:4
99:14,15,
16,17,18,
20,21,25
100:1,3,
5,6,9,11,
13,15,22,
25 101:4,
5 115:9,
11,12,13,
17
116:15,
18,19
120:2,3
121:23
122:10,23
125:12
126:6,21
133:8,9,
21,22

134:6,22, 23 135:15 136:5,8 139:16,19 140:16 141:12,13 144:19 146:22 147:1,10 148:9

frontage
12:24 13:5 50:10,11 56:5,13, 22,24 72:1,13 105:22,24 106:1,5 107:21 108:8,15, 24 109:3 115:6 120:12, 17,20,21, 22 121:5, 9,12,15, 16,22,25 122:1,12, 20,22,24 123:22, 23,25 124:8,11 125:10, 11,15,18 132:18,21 133:6

fronted
56:19

fronting
65:5

frustrating
80:13

full
18:17 60:5 144:8

fully
139:14

fully-
105:6

future
6:13 8:17

G

gain
32:20

game
24:13

garage
21:16 81:17 115:11,20

Gas
128:4

gave
65:23

general
36:13 53:18 75:11 118:18

Generally
53:21 85:6 134:4

gifted
73:11

give
9:6 10:2 23:10 32:11,12 45:22 57:11 60:5 83:12 85:8 137:13 146:17

giving
10:9 136:9

goals
36:8

God
138:15

GONZALEZ
4:4,7,9, 11,13,15 5:5,7,17 6:5 10:15 23:17,20 54:20 107:15,25 111:18 117:23,25 123:11 148:15, 17,19,21, 23,25

good
6:7 9:13 23:15,16 40:9 56:9

Goodell
150:16

Google
63:16

govern
50:1

governed
150:15

governs
55:18

grant
23:7 39:20 40:1

granted
33:4 39:6 49:11 105:22 107:21

grants
66:9,21

gray
10:22 118:1

great
49:19 61:12 105:2 106:24

green
11:2 22:13 94:25 96:19

ground
100:18

guess
10:13 40:11 42:7 117:21 132:15 140:6 149:1

guessing
76:21 136:3

guidance
9:6

guys
127:22

H

half
7:20 20:1,4 27:4 33:15 62:25 64:2 108:9 112:12 113:8,17

Hall
45:15

hand
5:17 103:24 106:3

Handbook
39:8

handed
24:1 45:9 102:17,22 103:6 111:23

handing
102:16

handling
121:7

hands
5:5

handwriting
17:13 45:20

handwritten
102:11, 17,21 103:3,5 104:12 105:17 107:2

114:3

happen
12:5
29:16
39:21
43:15
89:7
136:22,24
138:5
141:17
142:4
145:17,23
146:18

happened
13:9
22:24
54:9
125:25
128:11,
14,18
135:24
136:4,22
137:22
138:18,19
141:2

happening
24:8
61:23
90:7
146:2,11,
12

happy
47:23

hard
6:18
37:25
53:7
61:16
64:14

hardship
137:11

harming
33:8

harmonizes
134:17

head
135:5

header
81:18

health
36:11

healthy
28:13

hear
17:7
23:19
48:4,5,8

hearing
37:22
39:24
149:23,25

heavily
58:22

heavy
35:19

hedges
35:4

height
109:10
110:2

held
73:5

helpful
38:3,13

Henry
9:22,25
23:21,24
120:16

hey
57:20
128:18

high
32:13
35:14

highest
49:11

highlighted
15:12
25:9
43:23
82:18,20
115:10

highlighting
14:5

hired
7:7

historically
55:10

history
9:24
12:20
17:1 23:8
30:25
43:6
114:10
125:22,24
126:3,21
128:15
131:23
140:19
144:4,5,
12 145:21
146:13

hold
71:1
123:13,14
138:14

home
6:14 7:4,
21 8:17
26:16,22
27:1
31:11,19
32:5,25
34:10,16,
19 35:25
36:3,17
51:16,24
58:14
59:11
60:25
61:4,7,
10,15
62:8,18
64:22
71:11,14
73:17
80:6
123:15

homeowner
81:2,5
88:11
89:24

homeowners
145:7

homes
31:1

honest
23:3
32:18

honor
36:14
49:11

hope
111:20

house
6:21 7:24
8:5,13,
15,18
10:24
11:9 12:3
13:4,5,6,
9,10,13
14:2,12
15:19,23
16:2
18:23
19:24
21:24
22:4
25:7,13,
19,23
26:6,9,
12,20
28:2
29:1,20,
23 31:2,
3,24
32:15
34:9,20
35:1,7
36:3
42:15
53:16
56:14
58:13
59:14,17
61:22
62:17
67:5,16
68:14
69:25
70:12
77:5,12,
21 80:1,3
84:11,19
85:17
92:11,16
98:19
99:4,7,
11,14,16,
17,19,20
100:23
103:10,13
105:18,22
110:4
114:16,24
115:10
116:3,16
117:16
119:4,7
120:8
121:23
122:4,5
123:15,17

126:2,7
129:14
130:7
136:7,11,
13,15,16
137:7,9
139:6,13,
17 140:12
141:5,6,
10,17,23
144:23
145:14

houses
11:3
96:16,25
100:17
114:24,25

huge
143:22

Hyde
39:9
65:2,7

hypothetical
141:3

I

i.e.
16:4

ID
112:3

idea
27:11
35:3

identical
86:21

identified
28:2
86:20

identifies
19:7

II
38:22

Iler
9:22
19:13
22:11
23:10,13,
15,19,21,
24,25
32:9
40:12,19
43:3,6
45:9
46:20
138:5

Iler's
22:21
38:16
137:20

illegal
118:6
128:8
142:25

illegally
128:6

image
10:10
12:21
13:21,22

imagine
12:2 36:1
132:8

impair
21:7

imperative
55:21

impervious
129:9

implicated
136:12,13

implications
128:25

imploring
36:15

implying
144:7

importance
16:11

important
10:10
17:22
60:10
61:24
63:1
103:15,23
125:23

Importantly
11:4

impose
16:21

imposed
16:24
22:25
33:11
47:5,15
126:4

improve
34:10
35:21

improvement
14:25
15:2
16:13
130:14
137:5
146:14

improvements
11:18,19
15:17
39:16
43:25
44:1
146:2

improving
8:23

inaudible
85:7
130:6

inch
62:12

inches
18:13
62:16

incidental
86:21,24

include
38:7,8,
10,11
66:8
69:12
133:23
150:6

included
38:25
42:13
58:18
102:12

includes
64:18

including
19:8 28:8
38:21
51:17

incorporated
45:25
46:9

incorrect
30:20
69:3
84:20
88:10
101:22
144:10

increase
136:24

increased
35:10

index
38:15

indicating
94:8

indication
31:9

indications
91:23

individuals
9:3 150:7

industry
75:10

inferences
145:22

inflammatory
119:6
127:18

info
82:14

information
58:2
83:13
95:19

inhabitants
36:14

installed
34:16
35:1 70:2

instance
133:1
138:9

instances
54:13

Institute
49:8,10

instructed
134:23

insulated
62:11,12
77:9

integrity
34:4

intend
71:2

intentional
137:25

intentionally
32:23

interest
16:23
57:21

interior
20:2,16
25:22
26:12,16
71:21
72:2

interpret
133:15

interpretation
21:2 66:4
79:19
133:4
134:17,20

interpreted
83:5
145:6

interpreting
95:15

intrusive
34:23

investigation
12:7

involved
38:10

isolation
95:17
133:18
134:1

issuance
24:20
26:11
29:24
33:9

issue
7:16 8:8,
10,13
11:16
15:1
32:23
61:7
69:20
137:3

issued
16:3
17:8,24
18:22
26:15
27:14
28:21
30:19
32:3 33:1
46:21
47:10
51:16
53:15
58:15
60:9,12,
24 61:1
62:9
75:13,15
90:5
119:2
145:7

issues
10:1 19:1
35:18
90:10
145:2
150:17

issuing
15:6
32:22
147:6,7,
15

items
93:13

J

Jackson
108:5

January
61:5 70:1
113:3

jeopardy
35:24

job
56:9

Joe
4:13

joined
9:18,21

joint
56:19

Juan
4:9

July
16:11

June
15:4,11
19:6
25:24
51:4 57:7
59:21
61:6
65:24
68:22

jungle
36:4

justification
28:1

K

Kendall
24:9

key
102:13

kind
24:13
27:6 35:2
58:8
61:16
65:12
70:16
116:9
119:6
126:25
129:5

kinds
48:23

knew
7:3 29:12
70:22

knock
60:7

knowingly
32:19,22

knowledge
78:12
118:9
127:10

Kris
23:15
24:25
25:9
56:8,15
79:3
93:15
114:19

Kristofer
9:16

L

label
14:2

labs
82:19

Lamas
4:11,12
135:13,19
140:6,11
148:1,19,
20 149:9

Lamas'
149:7

land
30:21
48:20
56:5 58:7
86:23

lands
36:10

landscaping
35:21

language
66:24
127:17
128:10
142:1

large
24:6,7
28:9
71:20

larger
104:5

late
69:20

latest
144:17

law
9:20,21
68:12
69:15
74:3
122:19
128:2
134:3,9
137:6,10
138:1

leading
10:20

leaning
34:19

learned
143:23

leave
74:9
109:8
123:13

leeway
50:19
133:9

left
11:21
35:2 41:7
60:18
62:2
68:15
92:9,25
94:25
112:3,22

left-hand
45:13
104:14

legal
112:11
113:7
137:5
143:3,4,
5,6

legally
40:2 58:5
129:3
142:22

leisure
22:21

lending
6:24

lens
67:2

letter
14:9,15
15:5,10
19:1
20:23
25:24
28:22
36:25
45:25
46:8
47:11,15
51:3,5,9,
14,20,22
52:5
55:12
57:7,15,
17,18
58:1,2,9,
12 60:6,
12,14,25
61:6
65:24
68:9,22
73:4
106:4
108:4,13,
18,23
109:2,5
113:15
120:11
121:8,11,
14 123:24
124:5,17,
18 125:3,
17 126:6
127:18,20
138:23
139:5,6
140:3
143:7
147:5

letters
5:9 18:1,
22 19:22
20:19
36:19,21
38:10,15
43:10
46:21
47:5,9
59:22
117:4
125:20
126:13
127:2
128:16
137:16
138:4
143:8,11,
12 144:11
145:23
146:9

licensed
119:20

licensing
75:10

lied
128:13

lies
69:7

life
35:8
101:4

light
10:6
34:15
35:7

lights
10:15
35:11
64:14
74:14

limit
70:25

limitation
109:11

limited
71:4
117:9
136:4

listed
27:8
30:11
59:12

listing
26:2

lists
30:15

lived
6:14

lives
69:24

living
12:2
28:13
32:24
36:1

LLP
9:17

load
91:9

located
25:10,22
27:15
42:5 50:6
53:18
55:16
56:1,4
57:1,13
63:24
65:4 70:4
71:25
73:25
87:1
96:15
120:2,3
140:17

location
7:24 8:19
13:18
30:1
42:14
50:1
53:22
66:15
67:11
72:25
73:3
148:9

logical
29:19

long
16:16,21,
24 34:16
48:21,24
49:19
75:6
142:3

longer
50:18
56:11,24
57:11
115:7
140:25

looked
63:10
71:19
87:22
128:15
132:19

lost
138:15

lot
8:25
13:1,8
14:1,13
15:19
19:16
20:3,9,
24,25
25:6,7,
12,20,21,
22 26:13,
17 27:2,
15,17
29:7
31:24
33:11
42:5
46:22
50:7
51:11
55:20,25
56:3,7
57:5,14
58:10
60:9 64:1
66:6,13
67:22
71:20,21,
22 72:2
78:7
80:23
90:14
94:14,16,
19,22,23
95:8,22,
25 96:5
100:20,
21,23,24
108:16
120:23,24
121:21
122:9,10
123:14
124:7,8,
11,12
125:3,7
126:21
128:19,
23,25
133:22
134:22,23
136:14
140:16
143:25

lot's
56:22
71:25

lots
12:9,10,
21,23,24
13:5,7,
11,12
14:20
19:1,2,
11,16
20:13
25:9,10,
15 27:18
29:6,15
33:12,14
55:19
56:21
95:7
96:6,24
100:19,22
108:9
111:2
112:13
113:8,17
120:15
121:5
122:14
123:19,24
133:24
135:17

Ludlam
115:3,7,
13 117:1

M

Machado
9:13,16
10:16
23:14
32:8
36:18
37:6,9,
12,16,20
38:5
39:12
40:8 41:4
43:2,5
45:4
46:15,19
47:18,23
58:22
59:9,25
61:25
63:7
65:11
74:8,13
77:25
78:3,23
79:1,4,6
80:9 86:8
87:12
90:16,24
91:1,5,8,
15,20
93:16,24
101:10,13
102:16,20
103:21
104:8,23,
25 105:2,
3 106:9,
13,24,25
107:5,7,
17,19,24
108:1,3
109:8,9
110:22
111:4,8,
11,13,15,
22 113:20
114:5,20
115:1
116:24
117:12
120:14,
19,24
121:1,16,
21 122:8,
13,15,23
123:1,4,
8,12,17,
19,22
124:3,6,
16,19,21,
24 125:19
127:16,
21,24
128:1
130:1,11
131:3,5,9
133:13
134:8
137:2
139:9,23
140:9
142:19,
21,24
143:17
144:3
145:11
150:10,
13,16

Machado's
140:14

Madam
102:16

Madan
4:7,8 5:1
129:22
130:9,23
131:4,7,
21
132:10,15
133:2,13
134:4,24
135:9,12
147:22
148:12,
15,16

made
11:19
12:14
20:18
33:17
64:11
67:1
69:19
70:15
121:13
124:9
128:24,25
131:12,
14,16
137:5
143:15
144:19
147:8

main
9:1 62:17
77:12
86:18,19,
22,24
103:10,13
105:18
130:25
132:4,5,
13

maintained
14:4

major
70:12

make
6:20 7:3
9:1,8,12,
25 11:24
28:9
29:17

32:18,19
37:21,25
39:18
42:13,16,18,20
48:2
65:10
67:8,17
68:18
69:17
70:16
80:14
88:10,12
89:22
95:18
100:18
109:24
110:23
121:9
123:25
124:9
128:12
131:13
133:23
136:16
142:20
145:10,22
147:4,22
148:6
149:18

makes
29:14
68:9
80:3,4
138:2
147:1,4

making
23:8 27:6
42:22
68:19
137:15

malicious
128:8

man
126:12

mandated
73:25

manner
65:3

map
22:1
38:25

March
70:7
149:20

mark
58:24

marked
94:7
105:5

marking
92:21

master
49:7

master's
24:10

materia
133:15
134:19

material
134:19

materials
38:12

matter
5:12 62:3
65:14
101:25
139:1

matters
65:15
130:12

meaning
13:19
126:6

meaningful
67:17

means
48:20
49:10
59:15
72:1
105:11
111:3
133:15
134:18,23

meant
35:6
105:14

measure
63:17

measured
25:12

measurements
20:10

measuring
19:2
25:15

meet
23:6
39:19
59:1 64:4
92:9,12
149:8

meeting
4:18 19:8
149:8,12,20,21

meets
64:3

Melissa
37:1

member
4:9,11,13
148:17,19,21
149:7,22

members
23:16
55:2

memo
16:10,12

memorializing
20:23

memory
42:9
109:15,16

mention
68:11

mentioned
45:24
46:8
127:17
144:3

mentioning
41:4

merits
40:7

mess
127:13,15
143:22

met
16:17
26:15
51:23
61:2
89:24

Miami
6:13 7:5
8:11,12
9:18
24:19
28:14
32:24
39:1
45:15,16
49:16,23
55:3
71:17
75:4,7
79:9
80:16
81:19
86:1 90:6
96:23,24
100:22
112:8
113:5
127:4

Miami-
48:25

Miami-dade
24:3,4
28:5 29:4
30:22
84:12
85:24
112:16
113:11

mic
23:18

Michelle
9:19 10:2
13:14
16:4
24:15
32:10
36:18,20
113:1,2,3

Michelle's
11:17
12:3

microfilm
60:21

microphone
47:24
48:3
117:23

middle
82:13,15
112:7,25

113:7
123:20

mind
6:16 7:3, 12 15:25
20:22
33:18
36:1
128:17
133:14
137:20
144:5

mine
123:7
145:15

minimal
11:15

minimum
15:20
26:7 64:3

minute
45:23

minutes
4:18
106:18, 20,21

misinterpretation
12:12

mislabels
89:5

misread
17:18

mistake
23:3
32:19
65:10
69:19
70:15
83:7,9
134:3

mister
118:22

moderate
128:10

Molina
4:9,10, 20,25
106:20
110:20
135:10
143:15,18
146:21
148:17,18
149:17

Monday
149:20

money
6:25 35:2
73:17

monstrosity
35:5

month
149:8

months
57:19
70:9

morals
36:12

morphed
60:14

motion
147:21,22
148:2,12, 25

move
4:20
8:14,15
42:14
54:20,24
61:3 62:4
63:14
64:13
68:3
94:11
149:17

moving
62:7
80:12
96:3

multiple
20:19
21:1
46:16

municipalities
28:8

N

name's
40:10

narrow
100:24
110:4

narrower
56:18
65:5
72:1,4,9, 13,18
115:6
116:19
125:12

narrowest
19:16,21
29:7
50:7,8,9
56:5,22
72:22
95:8
133:9
134:6
135:14

naturally
6:21 47:4
56:17

nearest
95:5

necessarily
83:16
87:25
89:2

necessity
16:16
144:8

needed
62:1
120:13

neighbor
8:1,2,3
32:18,19
33:1,4, 14,21
34:9,21
35:5,10
72:5,23
73:10

neighbor's
33:11
34:7,20

neighbors
7:25 10:7
36:19
70:18
73:15
90:8

newly
31:14

NFL
150:17

night
149:6

non-conforming
14:25
15:1
44:15

noncomformance
44:12

nonconformance
44:10

nonconforming
135:21
136:7,8, 20,22
137:1,3, 6,10
138:2,10
140:8,12, 15 141:1, 5,10,12, 13 143:4, 5

nonconformities
20:20
44:5,8,21
45:2
46:23
122:16,20
126:18
137:17,21

nonconformity
19:5
126:17
137:5,14
138:1,17
142:2,22
143:14

north
10:17
13:7,17
14:14
15:7,20
17:2
25:5,8
28:25

31:4
40:21
50:3
52:9,12
53:16
54:10
55:6 57:1
61:8,15,
22 62:8
63:12,19
67:16
68:1
75:22
76:6,9
98:15
99:9,14,
22 106:6,
12 108:24
112:8,12
119:10
120:22
121:12,17
122:3
140:21

northwest
129:11
132:22

northwesterly
108:9
111:12,13
113:8,17

note
37:21
69:17
71:8
105:21

noted
29:24
107:20

notes
66:3
102:11,
17,22
103:5
104:6,12
105:18
107:2
114:3
121:7

notice
69:23,24
113:4
150:1

November
51:20,21
60:24
70:5

number
8:9 14:5
50:23
53:12
62:9,15
79:10
110:18
138:7

numerous
126:12

NWLY
110:25
111:9

O

oasis
35:24

objectively
34:6

objectives
28:10

obligated
28:15

obligation
44:11
127:18
128:1,17

obligations
128:19

obnoxious
34:23

obtain
12:15

obtained
59:9

occurred
89:18
96:6
121:5,24
147:2

occurring
6:10

October
18:25
19:10

Office
39:5

offices
9:17

official
14:10,18
15:5 16:7
19:3,7,11
25:25
28:20
29:11
30:24
31:20
46:8
47:12
55:24
56:2 57:8
59:22
61:5
65:23
74:11
75:5,6
86:9
87:14
114:13
117:5
118:23
127:5
129:7
131:12
132:17
133:23
138:11
142:16,25
143:1

official's
148:8

officials
33:23
34:4 39:7

Oftentimes
134:24

one-half
110:25

one-story
52:16
60:2

open-ended
71:2

operation
125:14

opinion
10:1
22:23
24:16
32:2
38:16
42:10
44:20
45:3
46:20
47:1,14
84:21
87:7
95:14
105:9
130:12
144:20
147:3

opportunity
102:9

opposite
16:2
50:24
56:1,6
57:14
116:15

options
143:4,6

order
4:2 6:24
51:11
55:15
73:4
119:2
135:11
149:16

ordinance
16:19
39:2,3
44:18

orientation
13:19,20
30:20
31:1,11
105:7

oriented
96:25

original
51:11
52:14

originally
64:7

Orlando
4:11

outcome
66:19

overgrown
34:18

overhaul
34:13

overhead
33:7

overshadowed
36:4

owned
71:14

owner
9:19
13:11
14:9
20:11
21:5
24:14
25:13
26:1,20
27:21
51:4,7
60:8
70:11
71:12
80:6
105:23
106:5
107:22
108:14
109:24
128:22
137:9
138:11

owners
6:12 8:7
140:21
144:22

ownership
71:11

P

p.m.
4:3
149:20
150:21

pages
37:23

paid
118:20,24
119:21

Palm
24:3

Palmetto
72:11

panels
21:20

paper
85:24

parallel
51:1
97:4,9,
13,25
98:4,16,
22 100:16
115:1

parcel
25:6,21
28:19
30:24,25
112:3

parcels
28:9

pari
133:15
134:19

Park
108:10
112:13
113:9

part
9:2 18:14
19:10
22:4
35:22
36:23
37:4,6,7
38:1,20,
22 41:7
44:8
46:23
47:5
57:17
58:3 63:2
69:4 82:5
92:1,16
93:13,20
94:7,8
121:2
129:10,11
130:18
142:17
144:5
147:11

partial
17:11,19
18:9,20
41:6
60:9,21
61:3
75:18
76:2,22
79:17
101:16
114:11
144:6

partially
46:4,6
93:6,8

parties
5:6
143:20
145:12

partner
9:20

parts
67:19

passed
70:8

past
138:16

patience
111:21

patio
34:14

pattern
31:13

PDF
38:1
107:15

peace
36:1,12

people
9:6
131:13

percent
14:23
15:8 20:3
29:14
30:7,10
64:1
85:18
90:25
129:9

percolate
129:12

percolating
129:18

Perfect
102:4

perfectly
129:20

period
66:13
110:14

permanent
62:11

permit
12:15
16:3
17:4,8,
10,24
18:4,9
19:9
21:10,14,
15,19
22:5
24:20
26:12,16,
21 27:14
29:25
30:3,5,8,
19 31:8
32:2,22,
23 33:1,
5,9 34:2
38:17
40:1 44:7
47:10
51:15
53:3,12,
15,19
55:8
58:13
60:25
61:4,7
62:8,9,
10,14,21
63:19
64:16
65:1
69:21
70:21
71:25
73:8,22
75:12,18
76:2,23,
25 77:4
78:5,20,
21 79:7,
9,10
80:15,16
81:1,5,8,
21,22
82:4,5,8,
11,16

83:3,16, 24 88:6, 19 89:5, 15 90:5 101:17 114:10,11 118:7,8, 10,12 119:2,18 129:1,2, 24 130:2 133:5 142:18 144:13,17 145:7,8 146:8 147:15

permits
52:9,11 53:25 54:11 70:19 76:10 77:15 100:21 119:3 125:24,25 145:24 147:7,8

permitted
146:7

permitting
34:5 114:15

person
60:12 67:3,24

personal
90:23

pertaining
86:22 117:1,5

pertinent
39:1

Petitioners
9:11

philosophical
90:18

phonetic
39:9 78:16

photo
61:10,12 70:6,7,9

photocopies
104:4

photograph
64:11 70:1

photographs
38:11,19

physical
136:11

picture
61:17

pictures
7:23

piece
58:7

pieces
95:19 104:5

Pinecrest
72:7 97:11,12

place
34:18 36:1 114:14 135:16

plain
8:18

plan
7:4,10 8:16 15:9 18:6 22:19 27:16 30:13 39:3 42:23 44:9,12 62:20,21 64:16 68:18 92:10 103:17 104:15,20 105:5,12 107:8 115:12 117:8 141:5

planned
34:24 35:23

planner
24:5,6 43:15 44:20 47:22 48:18 49:8,18, 20 55:5 60:4 65:2 68:4 73:24 95:14 144:18 145:5,9

planners
49:9,10 144:21 145:4

planning
10:1 19:18,20 23:25 24:2,10 28:2,6,10 29:8 39:7 42:3,12, 21 43:15 44:14,25 48:21,22, 23 49:7 66:5,9 69:8,10, 14 73:23 95:12 122:18 127:3,5, 9,10 132:17 133:4 138:6 142:16

plans
7:8,11, 12,13 26:23,24 27:8 29:18,21 30:3,5 32:22 34:12 35:6,8 38:24 62:10,11 67:7 80:5 102:12 146:11

plant
35:4

plat
12:21 14:7 15:6 17:6,23 19:22 23:1 25:18 26:2,15 27:25 28:18,21 31:22 34:1 38:21 43:9 44:8 45:14,22 46:2,24 47:6,16 52:2,15 54:8,9 56:12,20 57:3,17, 20,24 58:4,5 69:5,12 71:20,21 72:8,10, 12,15,24 75:21 76:5,13 93:17 100:20 108:10 112:14,15 113:10,18 121:3,5 123:8,9, 12 131:18 136:12,13 138:8,12 139:19

plats
28:15,16 69:2

platted
12:22,25 16:4 25:8 121:2

platting
16:16,20, 21 19:4 36:9

play
66:16

plenty
11:2
plumbing
22:3
29:20
85:23
86:4
point
8:10
10:12
14:1 22:1
58:17
66:18
68:8
71:16
88:4,13
90:2
93:6,9
110:11
121:24
125:1,2
126:15
130:13
132:15
133:10,13
138:14,25
139:10
140:7
pointed
126:11
points
9:1 28:23
74:4
pool
10:18
96:21
pools
96:13
portion
16:4
19:17,21
29:7
95:4,8
135:15
141:23
portions
105:14,16
141:10
position
18:22
75:3
135:24
147:10
possibility
133:7
136:2,3
possibly
6:19
65:19
97:14
119:8
130:11
Postal
31:5
posture
12:18
23:5
39:24,25
potential
91:23
Potentially
105:10
power
42:14
Powerpoint
43:19
54:19
practice
55:12
98:18
practices
9:21
pre-
30:15
precedent
34:3
70:16
Predates
71:10
predecessor
33:11
prefer
78:24
premises
86:19,24
prepared
27:24
78:9,11
80:17
81:4
89:2,12
97:21
prepares
85:25
preparing
29:18
present
4:15 5:3
11:18
40:6
90:11
presentation
9:12,15,
25 22:22
23:11
24:25
38:8 54:4
78:19
91:9
98:12
103:2
111:5
113:22
123:6
presented
40:12
96:7
100:14
101:7
120:11,14
presenting
54:22
88:18
presently
15:19
preserve
16:23
35:6
president
23:25
pretty
8:1
prevent
66:24
previous
59:22
144:15
145:5
previously
23:22
27:10
48:12
74:23
primary
131:4
principal
23:25
24:5
principle
36:14
principles
28:12
44:14,25
printout
25:2
81:11,13
prior
15:6
26:11
27:24
31:9 55:5
71:12
104:21
privacy
10:6 35:3
36:2
privileges
33:4
probability
35:13
problem
7:19,20
8:22
24:13
84:6
129:17
procedure
39:22
procedures
12:13
proceed
44:18
process
6:22
14:7,19
28:2,11,
15 32:14
34:2,5
38:13
39:18,23,
24 40:6
43:15
53:14
69:21
90:20
132:18,23
133:3
141:8
142:5,8

143:13
146:18
150:4

process-wise
149:1

produce
66:18

profession
48:17
49:11,12

professional
24:16

professionals
29:18

progressed
70:11

prohibiting
42:21

project
34:25
35:22
40:3
64:21

projection
62:17

projects
24:7
62:22

promise
113:23

promoting
36:11

propensity
126:13
138:24

proper
12:6,13,
18 15:3,
10 20:20
23:5
32:15
44:25
134:20
138:6

properly
120:2

properties
11:1,4,16
12:1
25:3,4
54:7
56:12
66:7
71:18,19
72:21
96:12
101:5
111:17
120:25
121:2

property
6:12
8:21,24
9:24
10:4,5,
11,12,14,
17,19,21
11:5,6,
11,17,23
12:22
13:25
14:9,11
16:5,15
17:2,9
18:12,13
20:6,11,
19 21:5,
12 22:1,
10 23:1
24:22
25:2,5
26:1 27:3
35:15
36:6,8
38:18
40:20,24
41:17
43:7,20
44:4 46:2
50:2
51:4,5,18
55:9,15
56:13,19
57:13
58:6,12,
21 62:6
63:11,12,
18 64:8,
12 65:8
66:15
67:1,6,25
71:10
72:10,12,
18 73:12,
20,25
76:10
85:20
92:2,22
93:1 94:1
98:17
99:5,8,12
106:5
108:14
109:24,25
112:7
115:2,3,4
117:5,9
120:22
121:9
125:22
126:22
128:22
129:7,9,
11,13
130:5
138:2,21
139:22,
24,25
148:10

property's
65:18
128:14

proposed
22:13
28:21
64:21
67:5
92:9,12

prosperity
36:12

protected
137:10,24

proves
126:23

provide
14:11
17:12,17,
20,22,25
18:14,20
19:6
20:20
26:6
46:12
50:16
63:25
70:24
79:14
105:6
125:20,21
140:1,5
143:13
149:25

provided
20:11
51:18
58:1,10,
11 61:9,
21 62:21
64:3
115:13
117:17
139:12
145:23

providing
19:24
27:25
140:3

provision
19:15
28:12
29:10,12,
13 44:17
135:3,6

provisions
19:13
95:16
133:17,
20,25
134:14,
18,21,24
137:4

proximity
11:16
35:14

public
5:12
13:23
14:3
16:23
38:8,20,
22 102:5,
8,18
107:3
112:15
113:11

purpose
54:11
128:7,13

purposes
36:11
53:13,25
113:4

purview
145:10

push
117:25

put
9:14
15:13
34:17
36:15
42:17
43:19
57:4
78:19
81:5 83:4
103:21
104:1
106:10
114:5
120:16
126:13
139:5

putting
43:11
65:12

Q

Quail
72:3
96:7,8,
10,25

qualificati ons
49:3

qualifier
133:10

quality
61:12

question
12:25
14:14
42:7
58:24
73:6
79:20
80:22
81:7
83:20
87:13
91:21
93:4
110:17
114:23
116:25
120:9
127:1,17
129:22
132:16
135:13
138:17
141:4
144:4,23
146:6

questioning
74:7
119:5

questions
32:8
39:14
40:13
43:2 45:6
49:14
54:15,18
74:17
77:24
86:9
113:24
117:19
118:7
129:21

quick
112:18
113:1,21
116:25
141:4

quickly
43:21
91:10
114:22

quorum
4:15

R

R-1
25:11

R-1C
19:25
109:11
130:24

R-E-
17:14

R-E-A-R
17:17

rain
35:19

raise
5:5,17
7:6

raised
8:21
65:21
145:2

raises
10:5

Rams
78:16,25

range
48:21,22,
23,24

rationale
31:10

read
36:22
42:2
45:13,23
52:24
86:5,14
95:15,17
133:17
134:18

reading
45:13
108:18
130:24
133:7,24
134:1

ready
103:25
106:18

reaffirming
31:23

real
9:21
101:3

reality
141:2

realized
34:14

realm
6:20

rear
10:21
11:3,19,
25 12:16
13:9,12
14:2,12,
24 15:8,
21 17:12,
14,16,21,
25 18:6,
8,18,23,
24 19:6,
9,23,24
20:2,15
21:3,10,
14,17,18,
25 22:7,
14,15,19,
24 26:8,
22 27:2,
9,21
29:1,20,
23 30:8,
10,15
31:2,15,
18,20,23,
25 32:4
38:24
39:16,17
41:15,20,
24 44:1
46:4
50:21,23
51:2,10,
17 55:15,
16,25
56:5
57:12
58:11,20
59:1
61:21
62:23
63:6,25
64:4
67:25
71:15
78:5
79:13,16,
25 80:2,
3,8,10
82:21
83:13
84:1,4
85:13
86:18
87:1,16,
20,23
90:12
93:14
95:21
96:15,17,
19 97:2,
9,13,25
98:4,15,
16,19,22
99:3
101:17
102:1
105:7
115:24
116:2,3,

6,13,15
125:21
126:1,3,
5,22
130:3,15
136:6
139:14,
15,25
140:5
141:11,
17,21,24
144:20
145:25
146:1,2,
10,12,14,
15

rears
114:23,25

reason
6:8 67:6
70:23
82:10
90:5
120:19
124:4
128:21

reasonable
21:2 43:8
44:6,9
71:4

reasoning
68:4

rebuttal
32:9
39:13

rebutted
130:19

recall
61:6

received
5:8,10
38:9 61:4
73:20

receiving
33:5

recently
34:12

recess
106:17,22

recognize
29:19
58:7
149:6

recognized
68:5

recognizing
27:24

recommend
55:4
147:23

recommendation
149:4,22

reconcilable
134:15

reconcile
95:16
133:16
134:14

reconciled
146:4

reconciling
133:25

reconsideration
126:25

reconsidered
20:23
43:11
101:16
126:10,12
143:11

record
5:21 9:16
14:3
27:19
36:23
37:7,14,
21,24
38:1 49:1
63:8 74:3
102:18
108:13
111:15,17
113:14
126:8
148:6
149:15,19

recorded
112:15
113:10

records
12:7
13:24
22:2
32:21
38:8,20,
22 58:19
59:8,13
85:21
102:5,8
107:3
112:15
113:11

RECROSS-EXAMINATION
45:7
87:11
116:23

red
27:17

redirect
43:3,4
46:18
86:11
113:25

117:13

reduced
60:22
61:15

refer
29:22
104:7
134:22

reference
132:20
145:25

references
102:24

referred
25:5
28:22

refers
102:14
105:15
113:16

regard
24:16

regime
136:25

regulate
85:11

regulated
66:10
103:10,13
105:20

regulating
36:9

regulations
61:2
134:25
135:8
136:20

reinforced
144:14

relate
18:2
33:14

related
100:19

relates
18:9
87:16

relating
39:8

relation
50:18

relationship
136:18

relevant
12:20
19:13
26:4
28:4,23
74:4
95:19

relied
9:5 58:22
126:1
140:22

relief
12:18
137:13

rely
137:11

relying
55:11
147:3

remain
19:24
57:10
121:16

remained
47:15
122:21

remaining

16:4

remains
18:23

remember
41:5
107:11
111:6
135:5

remodeling
34:9

removal
31:25
34:13
59:24

remove
15:2
34:18
60:17
64:20

removed
14:23
16:6 19:6
22:15,16
26:11
51:11
58:16
60:18

render
24:15

rendered
24:19

renovated
34:10

renovating
73:17

renovation
34:25

renovation's
35:8

renovations
70:12

repeat
24:24
28:24

repeated
56:8

repeatedly
29:22

replaced
35:23
64:10

replacement
34:17

replat
17:5

replatting
36:9

report
12:23
13:15
16:25
17:18
19:19
22:22
23:10
25:1,10
27:16
28:23
30:13
38:16
66:3
101:22,25
121:4
126:9

reported
21:9

REPORTER
5:21,24

represent
88:1

representations
32:20
128:12

representative
88:2

request
30:23
108:8,15
121:9,10,12,13
124:1,9
138:4
149:23

requested
138:9,10

requesting
14:16
106:5
108:24

requests
38:9

require
12:17
42:2,12
50:5
68:25
77:14
85:6
117:17
139:13

required
11:19
12:12
18:1 19:8
21:3 23:5
24:18
26:18
30:4,7,10
31:18
41:15
51:17
62:18
64:25
95:15,18
120:12
124:7
125:3
132:6
146:3

requirement
22:25
128:9
132:3

requirements
15:15,18
16:21
26:2,3,5
28:18,22
30:23
31:10,23
43:9 44:6
46:22
61:1 64:4
126:5
145:18

requires
12:19
55:9 65:6
110:12
122:18

requiring
20:24
27:3
31:25
132:9

RES
53:19
55:8
64:17
75:12

reserve
54:15,17

residence
13:14
22:14
130:25

resident
90:6

residential
25:11
109:12

respect
62:18
101:23

respond
127:16
137:2
138:7
139:9

responds
14:18

response
38:9

restrictions
58:1

restrictive
135:1

rests
67:9 69:6

resubdivide
25:14

resubdivided
19:12

resubdividing
36:10

resubdivision
16:15
25:18

result
139:8

resulting

25:20

resume
24:1

retained
24:14

retired
138:25

return
23:5

reversal
122:2,3

reverse
105:22,24
106:1,5
107:21
108:8,15
120:11,
20,21
125:10
126:8
132:18,21
133:6

reversed
122:2
123:25
126:14

review
22:20
28:17
38:14
65:1
85:19
133:5,14,
20 142:17
146:19
150:17

reviewed
7:11,12
28:21
38:4
40:19
41:3,23
43:6
49:23
53:13
54:7,11,
12 62:9
77:17
102:5,8
117:1
131:15,17
144:21

reviewer
39:9

reviewing
67:7
114:10

reviews
81:6

revised
27:13

Revocable
113:3

rezones
137:7

rezonings
138:9

rights
70:20

rising
62:13

risk
35:10

Rivera
37:17

road
24:8
28:14
115:3,7,
14 117:2
135:15

Robin
115:7,17,
21

Rodriguez's
91:9

Rogelio
4:7

Roger
150:16

rogue
137:18

role
49:16

roll
4:3

roof
8:21
21:17,19,
21,24
33:7
62:12
70:2 77:6
81:13,15
82:18
130:5

room
62:12
77:1,7,8

roughly
63:17

rows
10:22

Rubio
5:9
37:12,13

rules
6:20 9:2

run
20:5,12
98:22

runner
134:11

S

safe
35:25

safety
35:8
36:11

sake
66:16

sat
6:8 70:20

save
7:7 39:13

scale
24:6

scenario
59:6
60:20
66:17
92:14

scenarios
59:4

screen
10:12
21:20,22,
24 62:11
78:22,24
79:8
80:8,12,
15,20
85:21
95:2
103:21
104:1,14
106:10
108:6
113:16
114:6
117:10
139:16

screened
77:1,6,7
130:4

scroll
107:5

scrolling
107:15

scrutinizes
6:25

sealed
46:1
78:16

seat
47:25

section
29:5
42:2,8,11
44:14
49:24
50:1,5,15
55:17,25
56:25
57:9
65:23
66:2,4,7,
10,11,20
67:4 69:1
86:16
94:12,24
132:9,11,
23 140:15
142:21

sections
39:1

seek
44:12

seeks
66:19

selected
107:22

send
28:16

sense
10:25
29:15
71:1
99:25
101:4
136:17
142:20
143:23
144:1
146:13

separate
62:14
132:17
149:25

separated
85:17
130:25
132:3

separating
11:4
63:18

separation
10:25
11:15
12:1,4
132:9

September
14:17
17:10
19:8
47:11
60:8
79:10
108:5

SERA
54:24
148:5,13
149:18
150:12,14

series
10:22

serve
49:18

served
54:16

service
31:5
90:17
149:11

serving
49:19

set
32:10
36:8
41:10
70:17
149:25

setback
11:20
14:24
15:8,18,
22,25
16:1,6
18:1,15,
18,20
20:17
21:6
22:25
26:10
27:4,9,
17,20
29:2,3
30:1,4,6,
8,9,10,
15,19,20,
23 31:10,
11,13,18,
20 32:1,4
40:19,23,
25 41:3,
14,16,17
44:2,6
46:12,22
51:10,17
55:6
57:12
58:9,11,
15 59:1,
7,10,11,
16 60:3,
6,19,20
61:21
62:1,3
63:17
64:3,5,9,
25 67:21,
25 71:9,
13,15
72:3,17,
21,23
73:11,13,
19 91:12
92:10,20
102:6
105:7
115:13,20
116:6
120:4
122:5
125:21
128:5,9
130:16,
21,22
132:6
136:6
139:2,4,
14 141:25
144:8
145:18
146:3,5,
15

setbacks
7:22
12:12
13:18
15:3,9,
10,21
17:12,20,
22 19:6,
8,25
20:21
22:8
24:18
26:7,18,
24 27:7,
9,13 28:1
51:17,23
58:20
59:23
61:8
62:19
65:15
70:3,23
79:14
84:3 85:3
92:13
103:10,13
105:20
117:6,16,
17 119:8
120:4
126:16
137:8
139:11,17
143:14
144:14
148:11

settle
7:5

Seventh
9:17

sewer
16:13

shaded
67:19

share
47:24

shared
40:21
104:13

sharing
79:8

shed
10:24

sheet
22:8

shining
35:11

shocked
34:21

shoes
36:15

short
48:22,23,
24

shorter
50:18
56:18

shortest
50:10,11
146:25
147:11

shortly
26:17

show
12:7
14:20,21
15:7,9
19:22
22:2 26:1
39:16
53:2,3
61:13
63:10
71:9,17
75:25
103:5
111:5
121:8
130:6
146:13

showed
18:7
21:20,22
25:10
59:25
60:1

103:2
122:5

showing
7:23
21:23
27:19
38:23
39:4
71:11
80:20
91:13
102:6

shown
12:21
25:25
30:3,15
31:14
47:9 59:9
98:12,15
114:3

shows
17:7
21:12
25:1,4
27:18
43:22
53:4
58:19
59:6,10
60:22
61:13
62:16
63:21
70:2
93:13
125:18
126:2,11,
20,24,25
130:14
144:11

shuffle
106:11

shut
109:13

side
6:9 8:3
14:24
15:9,22,
25 16:2,
3,9 20:1,
2,8,17
21:23
26:8,9
27:1,3
29:2,4
30:9
41:17,20,
24 45:13
47:20
50:25
52:19,21
53:24
54:2 55:7
57:14
59:11
62:3
63:23,24,
25 64:3,
24 65:8,
14 67:21
71:9,13,
14 72:2,
5,9,11,
19,23
73:18
80:1
85:18
95:21
97:2,7,8,
18 98:23
99:4,11
100:23,24
104:14
109:25
114:23
125:21
126:1
130:19,21
136:12,15
139:2,18
141:13
147:12

sides
114:25

signed
45:16
60:11
61:4
78:16

significanc
e
13:22

significant
73:16

Silvia
47:22
48:11,16
74:17
79:20
86:10
91:5

similar
54:8
71:18
135:16

similarly
71:19
73:12
77:21
98:11
121:2

simply
12:17
21:1
70:19
126:19
144:23

single
13:4
25:11
88:19
101:7
126:15

sir
37:15
47:18
79:7
84:14
86:5
90:16
109:17

site
27:16
39:3 58:7
62:20
64:16
108:16
115:12
120:4
129:8,16,
17 133:12

sitting
54:22

situated
15:19
71:19
73:12
98:10

situation
15:2
67:23
98:25
99:3
140:24
145:19
147:3

situations
71:17
96:5
100:19

size
52:16

sketch
52:15
53:3,4
58:18
59:3,6
60:19
61:9
76:8,18

sketches
52:8,10,
11

skip
74:18

slab
21:17
62:13

slide
11:8,11
25:9 47:9
78:20
91:11,14
92:19
103:8
104:22
113:23
123:6

slideshow
25:16
29:19
30:2

sloping
35:16

sloppy
65:12

slow
58:8

small
41:7
60:19
67:15

sort
35:4

sorts
10:5

sought
33:12

sound
28:12

Sounds
90:8

south
16:2 26:9
30:9
52:21
67:20

southbound
8:2

Southeast
9:17 24:4

southeasterly
112:12

space
11:2
35:25
45:20
63:13
64:18

speak
5:12
32:16
49:1
118:23
119:22

special
33:4 49:4
75:9

specific
16:16
41:24
66:11
134:16

specifically
16:20

speculate
105:10
143:10

speculation
145:23

spend
6:25
73:16

spending
35:2

spite
29:11

split
33:12
46:23
51:12
56:12
71:20
120:23,24
122:10
123:24
135:17

Spring
55:3

Springs
6:13,15
7:6 8:11,
12 24:19
28:14
32:24
39:1
45:15,16
49:17,23
71:17
75:4,7
79:9
80:16
81:19
90:6
96:23,24
100:22
112:8
113:5
127:4

stable
28:12

staff
12:23
13:15
16:25
17:18
19:19
21:9
24:19
27:24
31:9,22
55:3 66:3
73:1,22
101:22,24
119:25
121:3
126:9

staff's
125:2

stage
90:3

stake
10:1
128:23

stamp
63:5

stamped
138:12

stand
5:3 34:2

standard
41:12

standards
146:19

start
10:9
37:22
40:11
47:22
68:17
111:24

started
7:14,17
34:12,13
47:20

starting
109:13

state
24:11
48:15
75:1
88:25

stated
16:14
46:9
59:21
60:13

statement
32:11
46:22

states
51:9
60:25
108:13
142:2

stating
29:6

stayed
32:3

steal
114:18

step
28:25
41:7

stepping
149:10

steps
10:19

stipulating
129:23

stop
107:17,18

stops
68:19

story
59:2
88:15

stream
24:19

street
9:17
19:17
20:2 29:8
31:5
50:10,18
55:20
56:4
57:10,11
65:5
66:12
72:1,5,
13,16,18
94:15
95:5,9
97:15
116:19
124:10
125:12
132:22

streets
50:12
56:19

strict
68:2

structurally
44:16

structure
11:13,14
13:16
18:10,11,
21 19:10
21:25
22:5,15
34:7
35:14
36:5

41:4,9,
10,12
46:3 53:5
60:3
64:20,21,
23 77:9
78:6
82:14
84:10
85:22
88:23
93:2
99:10
101:18
105:5
130:3,15,
20 131:4
132:2,5,7
135:21
136:18,
19,20

structures
14:21
15:3
17:5,12,
16,20,22,
25 19:5
21:4
44:16
51:10
79:13
84:5,8
85:4
129:25
130:2,25
131:1

studies
49:7

stuff
93:22
141:2

subdivide
13:11
14:11
15:16

subdivided
12:10
19:2
20:13
28:10

subdivision
14:16,19
15:7
16:12
28:6
30:21
45:1
47:13
100:20
121:22,24
138:1

subdivision s
29:16
96:6

subject
103:17
104:16
107:9
129:18

submit
7:9
111:16

submitted
14:16
22:11
27:20
37:24
81:9
118:5
121:14
127:23

subordinate
86:17
87:16,19

subsection
135:14

subsequent
68:4
76:10
137:6
138:21
147:7

substantial
11:24

sucks
143:21

sudden
63:15
126:14

sue
40:3

suggest
33:15
89:4
90:11
91:22

sum
39:15

summarized
28:24

sun
77:8

sunroom
78:5

superseded
55:12

support
88:16

supported
62:13

suppose
110:3,5

supposed
33:3
35:25
133:14,16
134:14
140:17

surface
93:19

surrounding
31:1

survey
6:23
20:10
43:20
45:21
52:15
57:2
76:8,18
93:25

surveyor
9:7

surveys
38:12,19
108:16

suspect
12:6

suspicion
88:17

sway
130:13
131:10

swear
5:4,15

swimming
10:18
96:12,21

sworn
5:6,19
23:22
48:12
74:23

system
28:14

T

tab
38:15,16,
17,18,19,
20,21,22,
25 39:1,
2,3,4,7,8

takes
36:21

taking
49:14

talking
41:5
85:22
99:25
140:19
141:3

tall
35:4

Tallman
4:2,5,6,
16,21,23
5:2,8,14,
20,25
6:2,4
9:11 32:7
37:3,7,
11,15,18
38:3
39:11
40:8
48:7,9
74:14
91:3
104:21,24
105:1
106:16,
21,23
110:17,
21,23
111:2,6,
9,14

117:19
118:3
147:19,25
148:2,14,
23,24
149:1,14
150:20

tedious
36:21

telling
15:14

tells
15:23

ten
8:9 75:8
150:8

ten-day
150:4

term
48:22
98:11
128:9
133:8

terminology
78:8 80:7

terms
44:13
128:11

terrace
35:5

terrible
143:20
145:19

test
109:16

testified
5:19
23:22
48:12
60:4
74:23
131:12

testify
9:9

testimony
6:6 23:23
40:12
104:19
137:21
138:6

text
17:13
145:21

theory
20:5,12,
18 21:7
60:14
98:18
139:13
140:1

thereabouts
91:18

thereof
112:14
113:10

thing
4:17
16:11
19:23
32:15
58:5 60:7
72:20
81:2
89:21
131:22
134:9,12
149:5

things
10:6
29:16
40:15
68:17
90:15,23
91:10
113:22
119:16
129:1,6
131:14,15
136:1
143:22
149:13

thinking
136:14
145:13

Thomas
108:5

thought
81:25
138:15
145:14

thoughtful
35:21

thousand
37:23

throw
73:10

tie
134:11

time
8:22
12:22
13:2,8
16:15
22:20
24:8
25:17
26:13,19,
21 27:21
29:11
31:3 32:9
36:22
39:13
40:3
43:17
49:12
56:18
59:5
62:4,7
65:24
70:8,24
71:4,13
90:16
91:5
93:6,9
110:14
121:4
127:2,9
131:24
135:16
136:1
139:19
150:18

timeframes
71:2

timeline
19:3
47:8,13

timely
70:19

times
29:17
46:16
78:7

timing
69:17

titled
108:8

today
11:9
13:7,17
18:24
19:15
20:3
32:2,25
33:18
44:15
69:2
131:25
139:7
147:13
150:6

told
88:14

tonight
70:23
149:6
150:9

tool
30:22

top
11:23
35:1
81:14,16
92:9
112:3,22
135:5

total
60:10

totality
131:22

totally
69:3
129:6

touch
74:3

touches
68:8

traditional
26:24

train
138:15

trained
48:20

training
75:9

**transportat
ion**
24:6

treat
27:1 33:3
130:15,16

treated
17:2
53:24
55:10
65:18
71:18
77:20
132:1,7
139:1
140:20

treating
62:5

treatment
55:6
73:13
138:21

trees
34:21

tremendously
33:8

true
18:19
20:3
45:14
88:13
90:25
110:1,2

trusses
70:2

Trust
113:3

Trustee
113:2

turn
9:24
23:9,17
64:14
140:23

type
77:20

typical
10:6 29:3

typically
43:14

U

Uh-huh
76:11
97:5,20

Ulises
74:19,20,
22 75:2
86:14

ultimately
13:13
36:24
59:19,23
146:6

unapproved
30:19
31:13
32:4

unclear
93:11

undermine
34:4

underneath
45:21
82:19
113:1

understand
6:10 81:7
110:24
146:21

Understood
42:1
46:13

undo
139:3

unfair
32:20
34:3
140:23

unfortunate
145:3,13
147:2

University
24:11

unlawful
119:5

unlicensed
118:17

unlike
60:13

unplatted
36:10

unsightly
36:5

upfront
7:2

uphold
73:23

upholding
55:4
148:8

upper
45:19

urban
24:10
48:18
49:7

urging
36:14

Uribe
40:9,10,
18 42:25
45:5,8
46:13
47:19
48:2,5,14
54:14,21,
25 55:2
74:10,15,
25 77:23
78:21
79:3 80:8
86:12
87:10
91:3,4,
14,17,22
92:8
93:15,17,
21 94:13
96:4
101:10,12
109:23
111:19
113:21
114:1,18,
21 116:21
117:14,22
118:4,9,
15,19,22
119:1,10,
13,22
120:7
121:19
123:3,7,
10 124:25
125:17
127:8
131:8
135:18,23
138:7
139:21
140:10,13
150:19

Uribe's
92:20
98:11
103:2

USB
103:24
106:11

V

vacant
13:10
25:20

Valencia
4:13,14,
22,24
117:21,24
118:2,4,
13,17,20,
24 119:4,
11,15
120:6,9,
18,23,25
121:13,20
122:6,9,
14,22,25
123:16,
18,21
124:2,4,
15,17,20,
22 125:16
127:1,13,
19,22,25
128:21
141:4,16,
20,22
142:4,7,
11,15,20,
23
148:21,22

valid
40:1 73:4
145:3
147:4

validated
44:19

validly
68:15

Vargas
47:22,25
48:4,8,

10,11,16,
17 91:21
102:21
104:13,17
107:1,20
108:4
109:10
111:23
114:2
116:25
117:15
121:10
132:10,20
133:19
134:7
135:4
141:9,18,
21 142:1,
6,9,13,17
145:4
149:12

variance
12:16,17
23:6
27:20
31:21
34:2
39:17,19
40:6
63:7,8
103:17
104:16
107:9
117:17
146:17,19

variances
30:1,11,
18,20
31:15
39:6

variety
38:12
48:25

Velasquez
37:17,19

verbiage
79:21
88:20

verified
31:19

verify
85:12

versa
51:2

versus
56:24

vice
4:7 51:2
148:15

vicinity
53:19
63:1

view
10:2
11:25
21:23
64:6
92:20
97:15
125:2
134:13
140:2

viewpoint
32:12

violate
33:20,21,
22,24

violation
44:17
119:8
128:5
130:10
131:11
132:2

violations
21:1

virtue
13:1

vote
148:4,5

W

waive
16:21,24
19:4

waiver
14:7 15:6
17:6,23
19:22
23:1
25:18,19
26:2,15
27:25
28:16,18,
21 30:23
31:22
33:25
38:21
44:8
45:14,22
46:2,24
47:6,16
52:2,15
54:8,9
56:11,20
57:3,17,
20,23
58:3,4,5
68:24
69:2,5,12
71:20
72:8,10,
12,24
75:21
76:5,13
93:17
100:20
121:4
131:18
136:12,13
138:8,12
139:19

walk
19:13
43:18
91:10

walkway
115:17

wall
22:16
94:1

wanted
7:3 8:11,
12 61:12
125:15

warm
47:25

warranty
110:18
111:24

Wash
128:4

waste
56:10

watched
70:11
73:15,16

water
35:15
129:12,19

welfare
36:13

Wells
14:9,17
18:1,22,
25 20:18,
21 22:25
25:25
28:20
43:8
44:4,7
45:1
46:8,21
51:4,5,
21,22
57:8,24
59:19,20
60:12,24
61:2,5,7
66:21
108:5,14
121:8
122:17
124:7
125:20
126:4
127:2,12
137:16
138:4,20,
24 140:2
143:8
146:9

Wells'
47:5
121:7
144:10
147:5

Westward
45:15

white
10:16,22

wide
60:4
67:22
100:23

width
52:19
53:5
60:22
64:1
76:15,20

witnesses
5:2 39:14
47:21
74:7

wood
34:15

word
17:15,16
116:10

wording
119:6

work
7:15,17
48:24
59:7 70:8
80:14,22,
24 118:5,
8,10

worked
6:18 24:4
80:24

working
34:12
35:20
111:19

worse
35:3

would've
38:3
122:16
125:14
128:15,
16,17
132:4,8
135:20

Wright
69:22

write
20:22
81:1 88:9
89:13
126:13

writes
81:2
83:17
88:9

writing
42:17
43:12
126:14
138:20,24
140:3
147:15,16

writings
38:14

written
27:23
30:16,17
31:10
45:20
82:23
126:7
138:23
142:13
146:23,24
147:6

wrong
34:8

wrote
84:22,24
88:15
114:6,7
126:12
127:2

X

Xs
91:22
105:14

Y

yard
11:3,20,
25 12:16
13:3,9
15:21,24
17:3,12,
15,20,21,
25 18:8,
15,18,24
19:9,14,
24 20:15
21:11,17,
18,25
22:7,9,
13,17,19,
24 27:2,
3,21
29:1,22,
23 30:2,
3,8
31:18,23
32:1
33:25
38:24
39:16,17
41:15,16,
17 42:8,
15 44:1
50:2,6,
17,21,24
53:24
54:2
55:7,15,
16,19,24,
25 56:2,
3,5,25
57:9
58:20
62:23
63:6,22,
23,24,25
64:4
65:8,13,
25 66:11,
15,22
67:11,14,
21,22
68:3,5,16
69:4,7,15
71:15,25
72:6,9,11
73:1,3,5,
24 78:6
79:13,16
82:21
83:14
84:1,4
85:18
86:18
87:1,16,
20,23
93:14
94:13,15,
18,19
95:20,21,
24,25
96:17,19,
22 97:22,
23,24
98:15,16
100:25
101:17
102:1
105:7
109:25
115:13
116:13,
15,18
120:3
125:21
126:1,2,3
130:3,15,
19,21
133:8,9,
21 136:5,
6 139:14,
15,16,18,
19 140:5,
16
144:19,20
145:15,25
146:1,3,
14,15,22
147:11
148:9

yards
29:20
31:2
50:25
55:18
66:2,8,9
95:21
97:2,7,9,
25 98:22,
23 147:12

year
49:22

years
6:9,10
7:20 8:4,
5,9,19
10:24
24:2,5
31:7
33:18
34:9
49:21
55:13
70:6,10,
17,22
71:6
73:7,16,
20 75:8,
11 80:24
138:22

yellow
12:22
25:9

yield
14:23
15:3 20:4

young
6:12 8:16

younger
24:5

Z

Zoila
37:17

zoning
11:20

12:11,19
13:2
19:18,20
20:25
22:7
24:2,16
25:11
27:9,20
29:9,25
30:14
32:24
33:2 34:5
38:25
39:9
42:4,12,
21 48:21
61:1
66:6,9
69:8,10,
14 75:23
77:18,19
78:8
79:22
85:4
88:23
95:12,15
109:11,12
110:7,9,
12 127:3,
5,9,10
130:10
133:15
139:11
142:17

zoom
116:9

RESOLUTION NO. 2025 – 4280

A RESOLUTION OF THE MAYOR AND THE CITY COUNCIL OF THE CITY OF MIAMI SPRINGS, FLORIDA, AFFIRMING A RECOMMENDATION OF THE CITY'S BOARD OF ADJUSTMENT TO DENY AN APPEAL BY MICHELLE FERREIRA, THE OWNER OF THE REAL PROPERTY LOCATED AT 300 FALCON AVENUE, MIAMI SPRINGS, FLORIDA 33166, AND AFFIRM THE CITY ADMINISTRATIVE OFFICIAL'S DETERMINATION RELATING TO A SETBACK AT 200 NORTH ESPLANADE DRIVE; PROVIDING FOR FINAL ORDER; AND PROVIDING FOR AN EFFECTIVE DATE.

WHEREAS, on November 25, 2024, Michelle Ferreira, (the "Applicant") the owner of the real property located at 300 Falcon Avenue, Miami Springs, Florida 33166, filed an appeal (the "Appeal") pursuant to Section 150-111 of the City of Miami Springs (the "City") Code of Ordinances (the "Code") challenging an administrative determination relating to setbacks at a neighboring property located at 200 North Esplanade Drive, as legally described in Exhibit "A" attached hereto and incorporated herein by reference (the "Esplanade Property") and requesting that the City revoke building permit number RES21-1143 and issue a stop work order to enjoin the improvements proposed by the owners of the Esplanade Property; and

WHEREAS, Section 150-111(B)(1) of the City Code provides that the City's Board of Adjustment has, among other duties and powers, "the ability to hear and decide appeals where it is alleged there is any order, requirement, decision, or determination made by the administrative official in the enforcement of [Chapter 150 of the City Code]"; and

WHEREAS, Section 150-113 of the City Code provides that all case recommendations of the Board of Adjustment shall be reviewed at the next regular City Council meeting following the rendering of the Board's case recommendation, at which time the City Council shall either affirm the Board's recommendation or request a further meeting to be conducted on the recommendation with the City Council sitting as a Board of Appeals; and

WHEREAS, Section 150-113 of the City Code further provides that a motion to affirm the case recommendation of the Board of Adjustment shall constitute final City Council action on each case unless an Appellant, as defined therein, files a written "notice of appeal" with the City Clerk within 10 business days following the rendering of any case decision by the City Council; and

WHEREAS, the City initially scheduled the Appeal for a hearing before the City's Board of Adjustment on February 19, 2025 and the City Council on February 24, 2025 and provided notice of the hearings to the Applicant, the owners of the Esplanade Property (Ambar Sara Preval and Jovany Jimenez), and the public; and

WHEREAS, the City's Planning Director reviewed the Appeal and prepared a Staff Report (the "Staff Report"); and

WHEREAS, on February 19, 2025, the City's Board of Adjustment was scheduled to hold a hearing on the Appeal, however only 3 of the 5 Board members were present and the Applicant requested a postponement of the hearing to a date certain of February 26, 2025 in order to have a full Board present; and

WHEREAS, the City re-noticed the Appeal for a hearing before the City's Board of Adjustment on February 26, 2025 and the City Council on March 10, 2025 and provided notice of the hearings to the Applicant, the owners of the Esplanade Property (Ambar Sara Preval and Jovany Jimenez), and the public; and

WHEREAS, on February 26, 2025, the City's Board of Adjustment held a duly noticed public hearing on the Appeal, considered argument from the Applicant and the City, considered the record including the Appeal and the Staff Report, and based upon competent substantial evidence in the record[1], recommended that the Appeal be denied and that the administrative official's decision from which the Appeal was taken be affirmed for the reasons presented in the Staff Report and in the hearing; and

WHEREAS, on March 10, 2025, the Applicant and the City Staff requested and the City Council approved a joint continuance of the City Council's consideration of the Board of Adjustment's recommendation to April 28, 2025; and

WHEREAS, on April 28, 2025, the City Council considered the Board of Adjustment's recommendation and affirmed the case recommendation of the Board; and

WHEREAS, the City Council finds that this Resolution is in the best interest and welfare of the citizens of the City.

NOW, THEREFORE, BE IT RESOLVED BY THE MAYOR AND CITY COUNCIL OF THE CITY OF MIAMI SPRINGS, FLORIDA, AS FOLLOWS:

Section 1. Recitals. The foregoing recitals are confirmed, adopted, and incorporated herein and made a part hereof.

Section 2. Affirming Board of Adjustment's Recommendation. That the City Council hereby affirms the Board of Adjustment's recommendation that the Appeal be denied and that the City's Administrative Official's decision from which the Appeal was taken be affirmed. The City's Administrative Official's decision provides that:

a. The location of the front yard of the Esplanade Property is on Falcon Avenue; and

b. The yard of the Esplanade Property adjacent to the Applicant's Property is a side yard.

[1] Copies of the Appeal, Staff Report, the transcript from the February 26, 2025 Board of Adjustment hearing, and the exhibits received at the Board of Adjustment hearing from the Applicant and the City are all on record with the Office of the City Clerk.

Section 3. Final Order. The City Council's motion to affirm the case recommendation of the Board of Adjustment constitutes final City Council action on the Appeal unless a written notice of appeal is filed with the City Clerk within 10 business days following the rendering of any case decision by the City Council in accordance with Section 150-113(B)(1)(b) of the City Code. Further appeals from any final decisions of the City Council in regard to any case recommendation of the Board of Adjustment shall be maintained in accordance with the applicable appellate rules and procedures established by the laws of the State of Florida.

Section 4. Effective Date. This Resolution shall become effective immediately upon adoption.

The foregoing Resolution was offered by Vice Mayor Jorge Santin who moved its adoption. The motion was seconded by Councilman Fabian Perez-Crespo and upon being put to a vote, the vote was as follows:

Vice Mayor Jorge Santin	Yes
Councilman Joseph Dion	Yes
Councilman Orlando Lamas	Abstained
Councilman Fabian Perez-Crespo	Yes
Mayor Dr. Walter Fajet, Ph.D.	Yes

PASSED AND ADOPTED this 28th day of April, 2025.

DR. WALTER FAJET, PH.D.
MAYOR

ATTEST:

ERIKA GONZALEZ, MMC
CITY CLERK

This Resolution has been rendered in the Office of the City Clerk this 1st day of May, 2025.

APPROVED AS TO FORM AND LEGAL SUFFICIENCY
FOR THE USE AND RELIANCE OF THE CITY OF MIAMI SPRINGS ONLY:

WEISS SEROTA HELFMAN COLE & BIERMAN, P.L.
CITY ATTORNEY

EXHIBIT A

Southeasterly ½ of Lots 1 and 2, Block 58, CINEMA PARK ADDITION TO THE COUNTRY CLUB ESTATES, according to the Plat thereof as recorded in Plat Book 17, Page 2, of the Public Records of Miami-Dade County, Florida

Property Address: 200 N. Esplanade Drive, Miami Springs, Florida 33166

CITY OF MIAMI SPRINGS, FLORIDA
MIAMI SPRINGS CITY COUNCIL

IN RE 200 N. ESPLANADE DRIVE
RESOLUTION NO. 2025 – 4280

MICHELLE FERREIRA,

Appellant,

vs.

CITY OF MIAMI SPRINGS,
a Florida municipal corporation,

and

JOVANY JIMENEZ and AMBAR
SARA PREVAL,

Appellees.
_____/

NOTICE OF APPEAL

NOTICE IS GIVEN THAT Appellant, Michelle Ferreira, hereby appeals to the Miami Springs City Council, sitting as a Board of Appeals, the City Council's Final Order affirming the case recommendation of the Board of Adjustment, memorialized in Resolution No. 2025 – 4280, rendered on May 1, 2025. This Notice of Appeal is filed pursuant to Section 150-113(B)(1)(b)(ii) of the City of Miami Springs Code of Ordinances. A copy of the Final Order is attached to this Notice as **Exhibit A.**

This Notice of Appeal has been filed today with the City Clerk of the City of Miami Springs, Florida.

Dated: May 5, 2025

Respectfully submitted,

AKERMAN LLP
Three Brickell City Centre
98 Southeast 7th Street, Suite 1100
Miami, Florida 33131
Telephone: (305) 982-5658
Facsimile: (305) 374-5095

By: */s/ Kristofer D. Machado*
Kristofer D. Machado, Esq.
Florida Bar No. 102731
Primary: kristofer.machado@akerman.com
Secondary: diana.perez-gata@akerman.com

Attorneys for Appellant, Michelle Ferreira

CERTIFICATE OF SERVICE

I HEREBY CERTIFY that a true and accurate copy of the foregoing document was served on May 5, 2025, electronically via email to the following:

Erika Gonzalez-Santamaria, MMC
City Clerk
City of Miami Springs
Office of the City Clerk
201 Westward Drive
Miami Springs, FL 33166
(305) 805-5006
gonzaleze@miamisprings-fl.gov

Haydee S. Sera, Esq.
Weiss Serota Helfman Cole & Bierman, P.L.
2800 Ponce de Leon Blvd., Suite 120
Coral Gables, FL 33134
(305) 854-0800
hsera@wsh-law.com

Alejandro Uribe, Esq.
Weiss Serota Helfman Cole & Bierman, P.L.
2800 Ponce de Leon Blvd., Suite 120
Coral Gables, FL 33134
(305) 854-0800
AUribe@wsh-law.com

By: */s/ Kristofer D. Machado*
Kristofer D. Machado, Esq.

EXHIBIT A

RESOLUTION NO. 2025 – 4280

A RESOLUTION OF THE MAYOR AND THE CITY COUNCIL OF THE CITY OF MIAMI SPRINGS, FLORIDA, AFFIRMING A RECOMMENDATION OF THE CITY'S BOARD OF ADJUSTMENT TO DENY AN APPEAL BY MICHELLE FERREIRA, THE OWNER OF THE REAL PROPERTY LOCATED AT 300 FALCON AVENUE, MIAMI SPRINGS, FLORIDA 33166, AND AFFIRM THE CITY ADMINISTRATIVE OFFICIAL'S DETERMINATION RELATING TO A SETBACK AT 200 NORTH ESPLANADE DRIVE; PROVIDING FOR FINAL ORDER; AND PROVIDING FOR AN EFFECTIVE DATE.

WHEREAS, on November 25, 2024, Michelle Ferreira, (the "Applicant") the owner of the real property located at 300 Falcon Avenue, Miami Springs, Florida 33166, filed an appeal (the "Appeal") pursuant to Section 150-111 of the City of Miami Springs (the "City") Code of Ordinances (the "Code") challenging an administrative determination relating to setbacks at a neighboring property located at 200 North Esplanade Drive, as legally described in Exhibit "A" attached hereto and incorporated herein by reference (the "Esplanade Property") and requesting that the City revoke building permit number RES21-1143 and issue a stop work order to enjoin the improvements proposed by the owners of the Esplanade Property; and

WHEREAS, Section 150-111(B)(1) of the City Code provides that the City's Board of Adjustment has, among other duties and powers, "the ability to hear and decide appeals where it is alleged there is any order, requirement, decision, or determination made by the administrative official in the enforcement of [Chapter 150 of the City Code]"; and

WHEREAS, Section 150-113 of the City Code provides that all case recommendations of the Board of Adjustment shall be reviewed at the next regular City Council meeting following the rendering of the Board's case recommendation, at which time the City Council shall either affirm the Board's recommendation or request a further meeting to be conducted on the recommendation with the City Council sitting as a Board of Appeals; and

WHEREAS, Section 150-113 of the City Code further provides that a motion to affirm the case recommendation of the Board of Adjustment shall constitute final City Council action on each case unless an Appellant, as defined therein, files a written "notice of appeal" with the City Clerk within 10 business days following the rendering of any case decision by the City Council; and

WHEREAS, the City initially scheduled the Appeal for a hearing before the City's Board of Adjustment on February 19, 2025 and the City Council on February 24, 2025 and provided notice of the hearings to the Applicant, the owners of the Esplanade Property (Ambar Sara Preval and Jovany Jimenez), and the public; and

WHEREAS, the City's Planning Director reviewed the Appeal and prepared a Staff Report (the "Staff Report"); and

WHEREAS, on February 19, 2025, the City's Board of Adjustment was scheduled to hold a hearing on the Appeal, however only 3 of the 5 Board members were present and the Applicant requested a postponement of the hearing to a date certain of February 26, 2025 in order to have a full Board present; and

WHEREAS, the City re-noticed the Appeal for a hearing before the City's Board of Adjustment on February 26, 2025 and the City Council on March 10, 2025 and provided notice of the hearings to the Applicant, the owners of the Esplanade Property (Ambar Sara Preval and Jovany Jimenez), and the public; and

WHEREAS, on February 26, 2025, the City's Board of Adjustment held a duly noticed public hearing on the Appeal, considered argument from the Applicant and the City, considered the record including the Appeal and the Staff Report, and based upon competent substantial evidence in the record[1], recommended that the Appeal be denied and that the administrative official's decision from which the Appeal was taken be affirmed for the reasons presented in the Staff Report and in the hearing; and

WHEREAS, on March 10, 2025, the Applicant and the City Staff requested and the City Council approved a joint continuance of the City Council's consideration of the Board of Adjustment's recommendation to April 28, 2025; and

WHEREAS, on April 28, 2025, the City Council considered the Board of Adjustment's recommendation and affirmed the case recommendation of the Board; and

WHEREAS, the City Council finds that this Resolution is in the best interest and welfare of the citizens of the City.

NOW, THEREFORE, BE IT RESOLVED BY THE MAYOR AND CITY COUNCIL OF THE CITY OF MIAMI SPRINGS, FLORIDA, AS FOLLOWS:

Section 1. Recitals. The foregoing recitals are confirmed, adopted, and incorporated herein and made a part hereof.

Section 2. Affirming Board of Adjustment's Recommendation. That the City Council hereby affirms the Board of Adjustment's recommendation that the Appeal be denied and that the City's Administrative Official's decision from which the Appeal was taken be affirmed. The City's Administrative Official's decision provides that:

a. The location of the front yard of the Esplanade Property is on Falcon Avenue; and

b. The yard of the Esplanade Property adjacent to the Applicant's Property is a side yard.

[1] Copies of the Appeal, Staff Report, the transcript from the February 26, 2025 Board of Adjustment hearing, and the exhibits received at the Board of Adjustment hearing from the Applicant and the City are all on record with the Office of the City Clerk.

Section 3. Final Order. The City Council's motion to affirm the case recommendation of the Board of Adjustment constitutes final City Council action on the Appeal unless a written notice of appeal is filed with the City Clerk within 10 business days following the rendering of any case decision by the City Council in accordance with Section 150-113(B)(1)(b) of the City Code. Further appeals from any final decisions of the City Council in regard to any case recommendation of the Board of Adjustment shall be maintained in accordance with the applicable appellate rules and procedures established by the laws of the State of Florida.

Section 4. Effective Date. This Resolution shall become effective immediately upon adoption.

The foregoing Resolution was offered by Vice Mayor Jorge Santin who moved its adoption. The motion was seconded by Councilman Fabian Perez-Crespo and upon being put to a vote, the vote was as follows:

Vice Mayor Jorge Santin	Yes
Councilman Joseph Dion	Yes
Councilman Orlando Lamas	Abstained
Councilman Fabian Perez-Crespo	Yes
Mayor Dr. Walter Fajet, Ph.D.	Yes

PASSED AND ADOPTED this 28th day of April, 2025.

DR. WALTER FAJET, PH.D.
MAYOR

ATTEST:

ERIKA GONZALEZ, MMC
CITY CLERK

This Resolution has been rendered in the Office of the City Clerk this 1st day of May, 2025.

APPROVED AS TO FORM AND LEGAL SUFFICIENCY
FOR THE USE AND RELIANCE OF THE CITY OF MIAMI SPRINGS ONLY:

WEISS SEROTA HELFMAN COLE & BIERMAN, P.L.
CITY ATTORNEY

EXHIBIT A

Southeasterly ½ of Lots 1 and 2, Block 58, CINEMA PARK ADDITION TO THE COUNTRY CLUB ESTATES, according to the Plat thereof as recorded in Plat Book 17, Page 2, of the Public Records of Miami-Dade County, Florida

Property Address: 200 N. Esplanade Drive, Miami Springs, Florida 33166

City of Miami Springs
201 Westward Drive Miami Springs, FL 33166
Phone: (305) 805-5034 Fax: (305) 805-5036 Website: www.miamisprings-fl.gov

NOTICE OF PUBLIC HEARING

The Miami Springs City Council will meet as the Board of Appeals on **Monday, June 30, 2025,** in the Council Chambers at City Hall, 201 Westward Drive, at **6:00 PM**, at which time the matter(s) set forth below will be heard.

Appellant Information	Property Subject of Appeal
Michelle Ferreira Owner of 300 Falcon Avenue Folio No.: 05-3118-016-1591 Zoning: R-1C Single Family Residential Lot Size: 7,500 sq. ft.	200 N Esplanade Drive Owners: Jovany Jimenez, Ambar Sara Preval Folio No.: 05-3118-016-1590 Zoning: R-1C Single Family Residential Lot Size: 7,500 sq. ft.

Michelle Ferreira (the "Applicant" or "Appellant"), the owner of the property located at 300 Falcon Avenue, has filed an administrative appeal with the City of Miami Springs relating to the City's administrative determination of setbacks applicable to her neighbor's property located at 200 N Esplanade Drive ("Esplanade Property"). The Applicant requests that a building permit issued for the Esplanade Property be revoked and that a stop work order be issued.

On February 26, 2025, the City's Board of Adjustment held a hearing and recommended that the appeal be denied and that the City's Administrative Official's decision from which the appeal was taken be affirmed. The City's Administrative Official's decision provides that the location of the front yard of the Esplanade Property is on Falcon Avenue and the yard of the Esplanade Property adjacent to the Applicant's property at 300 Falcon Avenue is a side yard. On April 28, 2025, the City Council affirmed the Board of Adjustment's recommendation. The Applicant has appealed the City Council's decision. The City Council will meet as a Board of Appeals on Monday, June 30, 2025 to consider the matter.

You are invited to attend the meeting(s) in person, or you may express your comments in writing to the Office of the City Clerk no later than noon (12:00 p.m.) on the day of the meeting(s).

The above hearing(s) may be continued or deferred to a new date and time certain without further notice provided the date and time of the continuance or deferral is announced at the hearing(s). The relevant application and legislation, as applicable, may be inspected at the Office of the City Clerk during regular business hours. The meeting agenda(s) is/are available online at: https://www.miamisprings-fl.gov/meetings.

All interested parties will be heard. If a person decides to appeal any decision made at this hearing, they will need a record of the proceedings and, for such purpose, may need to ensure that a verbatim record of the proceedings is made, which record includes the testimony and evidence upon which the appeal is to be based (F.S. 286.0105). The City does not furnish verbatim transcripts. Interested parties should make the necessary arrangements for verbatim transcripts. For further information regarding the advertised items, contact the City Clerk at (305) 805-5006.

In accordance with the Americans with Disabilities Act and Florida Statutes §286.26, persons with disabilities needing special accommodation to participate in this proceeding should contact the City Clerk, no later than four days prior to the proceeding at (305) 805-5006 for assistance. If hearing impaired, contact the Florida Relay Service Number: (800) 955-8771 (TDD).

Erika Gonzalez-Santamaria, MMC, City Clerk
City of Miami Springs, Florida

U.S. Postal Service™
CERTIFIED MAIL® RECEIPT
Domestic Mail Only

For delivery information, visit our website at www.usps.com®.

OFFICIAL USE

Certified Mail Fee
$
JUN 11 2025
Extra Services & Fees (check box, add fee as appropriate)
☐ Return Receipt (hardcopy) $
☐ Return Receipt (electronic) $
☐ Certified Mail Restricted Delivery $
☐ Adult Signature Required $
☐ Adult Signature Restricted Delivery $
Postage
$

Postmark Here

7022 2410 0002 9319 3074

HH HOLDINGS GROUP INC
1046 E 16 ST
HIALEAH, FL 33010

PS Form 3800, April 2015 PSN 7530-02-000-9047 See Reverse for Instructions

U.S. Postal Service™
CERTIFIED MAIL® RECEIPT
Domestic Mail Only

For delivery information, visit our website at www.usps.com®.

OFFICIAL USE

Certified Mail Fee
$
JUN 11 2025
Extra Services & Fees (check box, add fee as appropriate)
☐ Return Receipt (hardcopy) $
☐ Return Receipt (electronic) $
☐ Certified Mail Restricted Delivery $
☐ Adult Signature Required $
☐ Adult Signature Restricted Delivery $
Postage
$

Postmark Here

7022 2410 0002 9319 3265

ROBERT D PLATZ TRS
SARA J PLATZ TRS
SARA J PLATZ TRUST AGREEMENT
380 FALCON AVE
MIAMI SPRINGS, FL 33166

PS Form 3800, April 2015 PSN 7530-02-000-9047 See Reverse for Instructions

U.S. Postal Service™
CERTIFIED MAIL® RECEIPT
Domestic Mail Only

For delivery information, visit our website at www.usps.com®.

OFFICIAL USE

Certified Mail Fee
$
JUN 11 2025
Extra Services & Fees (check box, add fee as appropriate)
☐ Return Receipt (hardcopy) $
☐ Return Receipt (electronic) $
☐ Certified Mail Restricted Delivery $
☐ Adult Signature Required $
☐ Adult Signature Restricted Delivery $
Postage
$

Postmark Here

7022 2410 0002 9319 3258

PONCIANA SPRINGS LLC
5805 BLUE LAGOON DR STE 300
MIAMI, FL 33126

PS Form 3800, April 2015 PSN 7530-02-000-9047 See Reverse for Instructions

U.S. Postal Service™
CERTIFIED MAIL® RECEIPT
Domestic Mail Only

For delivery information, visit our website at www.usps.com®.

OFFICIAL USE

Certified Mail Fee
$
JUN 11 2025
Extra Services & Fees (check box, add fee as appropriate)
☐ Return Receipt (hardcopy) $
☐ Return Receipt (electronic) $
☐ Certified Mail Restricted Delivery $
☐ Adult Signature Required $
☐ Adult Signature Restricted Delivery $
Postage
$

Postmark Here

7022 2410 0002 9319 3166

HHD INVESTMENTS LLC
307 N ROYAL POINCIANA BLVD
MIAMI SPRINGS, FL 33166

PS Form 3800, April 2015 PSN 7530-02-000-9047 See Reverse for Instructions

U.S. Postal Service™
CERTIFIED MAIL® RECEIPT
Domestic Mail Only

For delivery information, visit our website at www.usps.com®.

OFFICIAL USE

Certified Mail Fee
$
JUN 11 2025
Extra Services & Fees (check box, add fee as appropriate)
☐ Return Receipt (hardcopy) $
☐ Return Receipt (electronic) $
☐ Certified Mail Restricted Delivery $
☐ Adult Signature Required $
☐ Adult Signature Restricted Delivery $
Postage
$

Postmark Here

7022 2410 0002 9319 3296

MARGARET WATTS LE
REM DAVID CATO
REM JOEL B WATTS
415 CARDINAL ST
MIAMI SPRINGS, FL 33166

PS Form 3800, April 2015 PSN 7530-02-000-9047 See Reverse for Instructions

U.S. Postal Service™
CERTIFIED MAIL® RECEIPT
Domestic Mail Only

For delivery information, visit our website at www.usps.com®.

OFFICIAL USE

Certified Mail Fee
$
JUN 11 2025
Extra Services & Fees (check box, add fee as appropriate)
☐ Return Receipt (hardcopy) $
☐ Return Receipt (electronic) $
☐ Certified Mail Restricted Delivery $
☐ Adult Signature Required $
☐ Adult Signature Restricted Delivery $
Postage
$

Postmark Here

7022 2410 0002 9319 3173

GREGORY L CATES &W CAROL R
326 FALCON AVE
MIAMI SPRINGS, FL 33166-4414

PS Form 3800, April 2015 PSN 7530-02-000-9047 See Reverse for Instructions

U.S. Postal Service™
CERTIFIED MAIL® RECEIPT
Domestic Mail Only

For delivery information, visit our website at www.usps.com®.

OFFICIAL USE

Certified Mail Fee
$
JUN 11 2025
Extra Services & Fees (check box, add fee as appropriate)
☐ Return Receipt (hardcopy) $
☐ Return Receipt (electronic) $
☐ Certified Mail Restricted Delivery $
☐ Adult Signature Required $
☐ Adult Signature Restricted Delivery $
Postage
$

Postmark Here

7022 2410 0002 9319 3180

ERIC BRESSEAU
280 ESPLANADE DR
MIAMI SPRINGS, FL 33166

PS Form 3800, April 2015 PSN 7530-02-000-9047 See Reverse for Instructions

U.S. Postal Service™
CERTIFIED MAIL® RECEIPT
Domestic Mail Only

For delivery information, visit our website at www.usps.com®.

OFFICIAL USE

Certified Mail Fee
$
JUN 11 2025
Extra Services & Fees (check box, add fee as appropriate)
☐ Return Receipt (hardcopy) $
☐ Return Receipt (electronic) $
☐ Certified Mail Restricted Delivery $
☐ Adult Signature Required $
☐ Adult Signature Restricted Delivery $
Postage
$

Postmark Here

7022 2410 0002 9319 3081

JESUS M ECENARRO LE
CELIA ECENARRO LE
REM SYDNEY AMAYA ECENARRO
243 NAHKODA DR
MIAMI SPRINGS, FL 33166

PS Form 3800, April 2015 PSN 7530-02-000-9047 See Reverse for Instructions

U.S. Postal Service™
CERTIFIED MAIL® RECEIPT
Domestic Mail Only

For delivery information, visit our website at www.usps.com®.

OFFICIAL USE

Certified Mail Fee
$
JUN 11 2025
Extra Services & Fees (check box, add fee as appropriate)
☐ Return Receipt (hardcopy) $
☐ Return Receipt (electronic) $
☐ Certified Mail Restricted Delivery $
☐ Adult Signature Required $
☐ Adult Signature Restricted Delivery $
Postage
$

Postmark Here

7022 2410 0002 9319 3388

ROALNDO RIVERO JR
MARIA ELENA FONT
267 NAHKODA DR
MIAMI SPRINGS, FL 33166

PS Form 3800, April 2015 PSN 7530-02-000-9047 See Reverse for Instructions

U.S. Postal Service™
CERTIFIED MAIL® RECEIPT
Domestic Mail Only

For delivery information, visit our website at www.usps.com®.

OFFICIAL USE

Certified Mail Fee
$
JUN 11 2025
Extra Services & Fees (check box, add fee as appropriate)
☐ Return Receipt (hardcopy) $
☐ Return Receipt (electronic) $
☐ Certified Mail Restricted Delivery $
☐ Adult Signature Required $
☐ Adult Signature Restricted Delivery $
Postage
$

Postmark Here

7022 2410 0002 9319 3159

JONATHAN A SHERRY
KELLY A SPEAR
270 N ESPLANADE DR
MIAMI SPRINGS, FL 33166

PS Form 3800, April 2015 PSN 7530-02-000-9047 See Reverse for Instructions

U.S. Postal Service™
CERTIFIED MAIL® RECEIPT
Domestic Mail Only

For delivery information, visit our website at www.usps.com®.

OFFICIAL USE

Certified Mail Fee
$
JUN 11 2025
Extra Services & Fees (check box, add fee as appropriate)
☐ Return Receipt (hardcopy) $
☐ Return Receipt (electronic) $
☐ Certified Mail Restricted Delivery $
☐ Adult Signature Required $
☐ Adult Signature Restricted Delivery $
Postage
$

Postmark Here

7022 2410 0002 9319 3272

THOMAS RAYMOND CUMMINGS LE
REM CATHERINE LYNN CUMMINGS
363 FALCON AVE
MIAMI SPRINGS, FL 33166

PS Form 3800, April 2015 PSN 7530-02-000-9047 See Reverse for Instructions

U.S. Postal Service™
CERTIFIED MAIL® RECEIPT
Domestic Mail Only

For delivery information, visit our website at www.usps.com®.

OFFICIAL USE

Certified Mail Fee
$
JUN 11 2025
Extra Services & Fees (check box, add fee as appropriate)
☐ Return Receipt (hardcopy) $
☐ Return Receipt (electronic) $
☐ Certified Mail Restricted Delivery $
☐ Adult Signature Required $
☐ Adult Signature Restricted Delivery $
Postage
$

Postmark Here

7022 2410 0002 9319 3418

MARION D ZAMOTIN TRS
MARION D ZAMOTIN REV LIV TR
259 NAHKODA DR
MIAMI SPRINGS, FL 33166

PS Form 3800, April 2015 PSN 7530-02-000-9047 See Reverse for Instructions

U.S. Postal Service™
CERTIFIED MAIL® RECEIPT
Domestic Mail Only

For delivery information, visit our website at www.usps.com®.

OFFICIAL USE

Certified Mail Fee
$
Extra Services & Fees (check box, add fee as appropriate)
☐ Return Receipt (hardcopy) $
☐ Return Receipt (electronic) $
☐ Certified Mail Restricted Delivery $
☐ Adult Signature Required $
☐ Adult Signature Restricted Delivery $
Postage

Postmark Here

7022 2410 0002 9319 3067

GARY L VILLERE &
JUDITH L ASHFORD TRS
2160 E FRY BLVD STE C-5 #335
SIERRA VISTA, AZ 85635

PS Form 3800, April 2015 PSN 7530-02-000-9047 See Reverse for Instructions

U.S. Postal Service™
CERTIFIED MAIL® RECEIPT
Domestic Mail Only

For delivery information, visit our website at www.usps.com®.

OFFICIAL USE

Certified Mail Fee
$
Extra Services & Fees (check box, add fee as appropriate)
☐ Return Receipt (hardcopy) $
☐ Return Receipt (electronic) $
☐ Certified Mail Restricted Delivery $
☐ Adult Signature Required $
☐ Adult Signature Restricted Delivery $
Postage

Postmark Here

7022 2410 0002 9319 3395

POINCIANA UNITED METHODIST
CHURCH INC
300 N ROYAL POINCIANA BLVD
MIAMI SPRINGS, FL 33166-4429

PS Form 3800, April 2015 PSN 7530-02-000-9047 See Reverse for Instructions

U.S. Postal Service™
CERTIFIED MAIL® RECEIPT
Domestic Mail Only

For delivery information, visit our website at www.usps.com®.

OFFICIAL USE

Certified Mail Fee
$
Extra Services & Fees (check box, add fee as appropriate)
☐ Return Receipt (hardcopy) $
☐ Return Receipt (electronic) $
☐ Certified Mail Restricted Delivery $
☐ Adult Signature Required $
☐ Adult Signature Restricted Delivery $
Postage

Postmark Here

7022 2410 0002 9319 3364

TOWER APARTMENTS LLC
PO BOX 432505
MIAMI, FL 33243

PS Form 3800, April 2015 PSN 7530-02-000-9047 See Reverse for Instructions

U.S. Postal Service™
CERTIFIED MAIL® RECEIPT
Domestic Mail Only

For delivery information, visit our website at www.usps.com®.

OFFICIAL USE

Certified Mail Fee
$
Extra Services & Fees (check box, add fee as appropriate)
☐ Return Receipt (hardcopy) $
☐ Return Receipt (electronic) $
☐ Certified Mail Restricted Delivery $
☐ Adult Signature Required $
☐ Adult Signature Restricted Delivery $
Postage

Postmark Here

7022 2410 0002 9319 3401

NICKOLAS JAMES FEIJOO
ANOTNIO G FEIJOO
SHERRY FEIJOO
327 FALCON AVE
MIAMI SPRINGS, FL 33166

PS Form 3800, April 2015 PSN 7530-02-000-9047 See Reverse for Instructions

U.S. Postal Service™
CERTIFIED MAIL® RECEIPT
Domestic Mail Only

For delivery information, visit our website at www.usps.com®.

OFFICIAL USE

Certified Mail Fee
$
Extra Services & Fees (check box, add fee as appropriate)
☐ Return Receipt (hardcopy) $
☐ Return Receipt (electronic) $
☐ Certified Mail Restricted Delivery $
☐ Adult Signature Required $
☐ Adult Signature Restricted Delivery $
Postage

Postmark Here

2410 0002 9319 3333

SCHOOL BOARD OF MIAMI-DADE COUNTY
1450 NE 2 AVE
MIAMI, FL 33132-1308

PS Form 3800, April 2015 PSN 7530-02-000-9047 See Reverse for Instructions

U.S. Postal Service™
CERTIFIED MAIL® RECEIPT
Domestic Mail Only

For delivery information, visit our website at www.usps.com®.

OFFICIAL USE

Certified Mail Fee
$
Extra Services & Fees (check box, add fee as appropriate)
☐ Return Receipt (hardcopy) $
☐ Return Receipt (electronic) $
☐ Certified Mail Restricted Delivery $
☐ Adult Signature Required $
☐ Adult Signature Restricted Delivery $
Postage

Postmark Here

7022 2410 0002 9319 3234

MICHELLE AGUILAR
ROLANDO GONZALEZ
351 PLOVER AVE
MIAMI SPRINGS, FL 33166

PS Form 3800, April 2015 PSN 7530-02-000-9047 See Reverse for Instructions

U.S. Postal Service™
CERTIFIED MAIL® RECEIPT
Domestic Mail Only

For delivery information, visit our website at www.usps.com®.

OFFICIAL USE

Certified Mail Fee
$
Extra Services & Fees (check box, add fee as appropriate)
☐ Return Receipt (hardcopy) $
☐ Return Receipt (electronic) $
☐ Certified Mail Restricted Delivery $
☐ Adult Signature Required $
☐ Adult Signature Restricted Delivery $
Postage

Postmark Here

2410 0002 9319 3227

MARCUS R ANDERSON
CLAUDIA M PRUNA ANDERSON
338 FALCON AVE
MIAMI SPRINGS, FL 33166

PS Form 3800, April 2015 PSN 7530-02-000-9047 See Reverse for Instructions

U.S. Postal Service™
CERTIFIED MAIL® RECEIPT
Domestic Mail Only

For delivery information, visit our website at www.usps.com®.

OFFICIAL USE

Certified Mail Fee
$
Extra Services & Fees (check box, add fee as appropriate)
☐ Return Receipt (hardcopy) $
☐ Return Receipt (electronic) $
☐ Certified Mail Restricted Delivery $
☐ Adult Signature Required $
☐ Adult Signature Restricted Delivery $
Postage

Postmark Here

2410 0002 9319 3089

YULIER POLO
225 NAHKODA DR
MIAMI SPRINGS, FL 33166

PS Form 3800, April 2015 PSN 7530-02-000-9047 See Reverse for Instructions

U.S. Postal Service™
CERTIFIED MAIL® RECEIPT
Domestic Mail Only

For delivery information, visit our website at www.usps.com®.

OFFICIAL USE

Certified Mail Fee
$
Extra Services & Fees (check box, add fee as appropriate)
☐ Return Receipt (hardcopy) $
☐ Return Receipt (electronic) $
☐ Certified Mail Restricted Delivery $
☐ Adult Signature Required $
☐ Adult Signature Restricted Delivery $
Postage

Postmark Here

7022 2410 0002 9319 3319

PENNY HEINES
425 CARDINAL ST
MIAMI SPRINGS, FL 33166-3959

PS Form 3800, April 2015 PSN 7530-02-000-9047 See Reverse for Instructions

U.S. Postal Service™
CERTIFIED MAIL® RECEIPT
Domestic Mail Only

For delivery information, visit our website at www.usps.com®.

OFFICIAL USE

Certified Mail Fee
$
Extra Services & Fees (check box, add fee as appropriate)
☐ Return Receipt (hardcopy) $
☐ Return Receipt (electronic) $
☐ Certified Mail Restricted Delivery $
☐ Adult Signature Required $
☐ Adult Signature Restricted Delivery $
Postage

Postmark Here

7022 2410 0002 9319 3050

EGM HOLDINGS GROUP INC
4920 NW 165 ST
MIAMI GARDENS, FL 33014

PS Form 3800, April 2015 PSN 7530-02-000-9047 See Reverse for Instructions

U.S. Postal Service™
CERTIFIED MAIL® RECEIPT
Domestic Mail Only

For delivery information, visit our website at www.usps.com®.

OFFICIAL USE

Certified Mail Fee
$
Extra Services & Fees (check box, add fee as appropriate)
☐ Return Receipt (hardcopy) $
☐ Return Receipt (electronic) $
☐ Certified Mail Restricted Delivery $
☐ Adult Signature Required $
☐ Adult Signature Restricted Delivery $
Postage

Postmark Here

7022 2410 0002 9319 3340

TOMAS F HERNANDEZ &W ALINA
348 PLOVER AVE
MIAMI SPRINGS, FL 33166-4422

PS Form 3800, April 2015 PSN 7530-02-000-9047 See Reverse for Instructions

U.S. Postal Service™
CERTIFIED MAIL® RECEIPT
Domestic Mail Only

For delivery information, visit our website at www.usps.com®.

OFFICIAL USE

Certified Mail Fee
$
Extra Services & Fees (check box, add fee as appropriate)
☐ Return Receipt (hardcopy) $
☐ Return Receipt (electronic) $
☐ Certified Mail Restricted Delivery $
☐ Adult Signature Required $
☐ Adult Signature Restricted Delivery $
Postage

Postmark Here

7022 2410 0002 9319 3326

RICHARD BENNETTI &W MELISSA
315 FALCON AVE
MIAMI SPRINGS, FL 33166-4413

PS Form 3800, April 2015 PSN 7530-02-000-9047 See Reverse for Instructions

U.S. Postal Service™
CERTIFIED MAIL® RECEIPT
Domestic Mail Only

For delivery information, visit our website at www.usps.com®.

OFFICIAL USE

Certified Mail Fee
$
Extra Services & Fees (check box, add fee as appropriate)
☐ Return Receipt (hardcopy) $
☐ Return Receipt (electronic) $
☐ Certified Mail Restricted Delivery $
☐ Adult Signature Required $
☐ Adult Signature Restricted Delivery $
Postage
$
Total
$
Sent
Street
City, S

JUN 11 2025
MIAMI FL 33131

Postmark Here

JOVANY JIMENEZ
AMBAR SARA PREVAL
3145 NW 32 ST
MIAMI, FL 33142

PS Form 3800, April 2015 PSN 7530-02-000-9047 See Reverse for Instructions

7022 2410 0002 9319 3005

U.S. Postal Service™
CERTIFIED MAIL® RECEIPT
Domestic Mail Only

For delivery information, visit our website at www.usps.com®.

OFFICIAL USE

Certified Mail Fee
$
Extra Services & Fees (check box, add fee as appropriate)
☐ Return Receipt (hardcopy) $
☐ Return Receipt (electronic) $
☐ Certified Mail Restricted Delivery $
☐ Adult Signature Required $
☐ Adult Signature Restricted Delivery $
Postage
$
Total
$
Sent
Street
City, S

JUN 11 2025
MIAMI FL 33131

Postmark Here

EDWARD CALLAHAN
440 CARDINAL ST
MIAMI SPRINGS, FL 33166-3960

PS Form 3800, April 2015 PSN 7530-02-000-9047 See Reverse for Instructions

7022 2410 0002 9319 3197

U.S. Postal Service™
CERTIFIED MAIL® RECEIPT
Domestic Mail Only

For delivery information, visit our website at www.usps.com®.

OFFICIAL USE

Certified Mail Fee
$
Extra Services & Fees (check box, add fee as appropriate)
☐ Return Receipt (hardcopy) $
☐ Return Receipt (electronic) $
☐ Certified Mail Restricted Delivery $
☐ Adult Signature Required $
☐ Adult Signature Restricted Delivery $
Postage
$
Tot
$
Sen
Stre
City,

JUN 11 2025
MIAMI FL 33131

Postmark Here

JOSE A ALARCON
MARIBEL REDONDO
291 NAHKODA DR
MIAMI SPRINGS, FL 33166

PS Form 3800, April 2015 PSN 7530-02-000-9047 See Reverse for Instructions

7022 2410 0002 9319 2992

U.S. Postal Service™
CERTIFIED MAIL® RECEIPT
Domestic Mail Only

For delivery information, visit our website at www.usps.com®.

OFFICIAL USE

Certified Mail Fee
$
Extra Services & Fees (check box, add fee as appropriate)
☐ Return Receipt (hardcopy) $
☐ Return Receipt (electronic) $
☐ Certified Mail Restricted Delivery $
☐ Adult Signature Required $
☐ Adult Signature Restricted Delivery $
Postage
$
To
$
Sa
Str
Cit

JUN 11 2025
MIAMI FL 33131

Postmark Here

IDANIA G CARBALLO HARRIS
250 ESPLANADE DR
MIAMI SPRINGS, FL 33166

PS Form 3800, April 2015 PSN 7530-02-000-9047 See Reverse for Instructions

7022 2410 0002 9319 2985

U.S. Postal Service™
CERTIFIED MAIL® RECEIPT
Domestic Mail Only

For delivery information, visit our website at www.usps.com®.

OFFICIAL USE

Certified Mail Fee
$
Extra Services & Fees (check box, add fee as appropriate)
☐ Return Receipt (hardcopy) $
☐ Return Receipt (electronic) $
☐ Certified Mail Restricted Delivery $
☐ Adult Signature Required $
☐ Adult Signature Restricted Delivery $
Postage
$
Total
$
Sent
Street
City, S

JUN 11 2025
MIAMI FL 33131

Postmark Here

MANUEL ALFONSO &W LUCINDA CO TRS
339 FALCON AVE
MIAMI SPRINGS, FL 33166

PS Form 3800, April 2015 PSN 7530-02-000-9047 See Reverse for Instructions

7022 2410 0002 9319 3128

U.S. Postal Service™
CERTIFIED MAIL® RECEIPT
Domestic Mail Only

For delivery information, visit our website at www.usps.com®.

OFFICIAL USE

Certified Mail Fee
$
Extra Services & Fees (check box, add fee as appropriate)
☐ Return Receipt (hardcopy) $
☐ Return Receipt (electronic) $
☐ Certified Mail Restricted Delivery $
☐ Adult Signature Required $
☐ Adult Signature Restricted Delivery $
Postage
$
To
$
Se
Sti
Ci

JUN 11 2025
MIAMI FL 33131

Postmark Here

KEN KAMIYA &W ROSA
362 FALCON AVE
MIAMI SPRINGS, FL 33166-4414

PS Form 3800, April 2015 PSN 7530-02-000-9047 See Reverse for Instructions

2410 0002 9319 3135

U.S. Postal Service™
CERTIFIED MAIL® RECEIPT
Domestic Mail Only

For delivery information, visit our website at www.usps.com®.

OFFICIAL USE

Certified Mail Fee
$
Extra Services & Fees (check box, add fee as appropriate)
☐ Return Receipt (hardcopy) $
☐ Return Receipt (electronic) $
☐ Certified Mail Restricted Delivery $
☐ Adult Signature Required $
☐ Adult Signature Restricted Delivery $
Postage
$
$
$
C

JUN 11 2025
MIAMI FL 33131

Postmark Here

CARLOS J BETANCOURT
190 PARK STREET
MIAMI SPRINGS, FL 33166

PS Form 3800, April 2015 PSN 7530-02-000-9047 See Reverse for Instructions

7022 2410 0002 9319 3203

U.S. Postal Service™
CERTIFIED MAIL® RECEIPT
Domestic Mail Only

For delivery information, visit our website at www.usps.com®.

OFFICIAL USE

Certified Mail Fee
$
Extra Services & Fees (check box, add fee as appropriate)
☐ Return Receipt (hardcopy) $
☐ Return Receipt (electronic) $
☐ Certified Mail Restricted Delivery $
☐ Adult Signature Required $
☐ Adult Signature Restricted Delivery $
Postage
$
Total
$
Sent
Street
City, S

JUN 11 2025
MIAMI FL 33131

Postmark Here

ANTHONY ANDERSON
ZAIDA ANDERSON
VICTORINO GARCIA
325 CARDINAL ST
MIAMI SPRINGS, FL 33166

PS For[illegible] See Reverse for Instructions

7022 2410 0002 9319 3210

U.S. Postal Service™
CERTIFIED MAIL® RECEIPT
Domestic Mail Only

For delivery information, visit our website at www.usps.com®.

OFFICIAL USE

Certified Mail Fee
$
Extra Services & Fees (check box, add fee as appropriate)
☐ Return Receipt (hardcopy) $
☐ Return Receipt (electronic) $
☐ Certified Mail Restricted Delivery $
☐ Adult Signature Required $
☐ Adult Signature Restricted Delivery $
Postage
$
Total
$
Sent
Street
City, S

JUN 11 2025
MIAMI FL 33131

Postmark Here

GUILLERMO CARMONA
JOSE A HERNANDEZ
5935 NW 38 ST
VIRGINIA GARDENS, FL 33166

PS Form 3800, April 2015 PSN 7530-02-000-9047 Instructions

7022 2410 0002 9319 2978

U.S. Postal Service™
CERTIFIED MAIL® RECEIPT
Domestic Mail Only

For delivery information, visit our website at www.usps.com®.

OFFICIAL USE

Certified Mail Fee
$
Extra Services & Fees (check box, add fee as appropriate)
☐ Return Receipt (hardcopy) $
☐ Return Receipt (electronic) $
☐ Certified Mail Restricted Delivery $
☐ Adult Signature Required $
☐ Adult Signature Restricted Delivery $
Postage
$
Tot
$
Sen
Stre
City,

JUN 11 2025
MIAMI FL 33131

Postmark Here

JOSE R REYES
450 CARDINAL ST
MIAMI SPRINGS, FL 33166

PS Form 3800, April 2015 PSN 7530-02-000-9047 See Reverse for Instructions

7022 2410 0002 9319 3142

U.S. Postal Service™
CERTIFIED MAIL® RECEIPT
Domestic Mail Only

For delivery information, visit our website at www.usps.com®.

OFFICIAL USE

Certified Mail Fee
$
Extra Services & Fees (check box, add fee as appropriate)
☐ Return Receipt (hardcopy) $
☐ Return Receipt (electronic) $
☐ Certified Mail Restricted Delivery $
☐ Adult Signature Required $
☐ Adult Signature Restricted Delivery $
Postage
$
Tot
$
Se
Sti
Ci

JUN 11 2025
MIAMI FL 33131

Postmark Here

ANTONIO J RUBIO
STEPANKA HOFMANOVA
210 ESPLANADE DR
MIAMI SPRINGS, FL 33166

PS Form 3800, April 2015 PSN 7530-02-000-9047 See Reverse for Instructions

7022 2410 0002 9319 2930

U.S. Postal Service™
CERTIFIED MAIL® RECEIPT
Domestic Mail Only

For delivery information, visit our website at www.usps.com®.

OFFICIAL USE

Certified Mail Fee
$
Extra Services & Fees (check box, add fee as appropriate)
☐ Return Receipt (hardcopy) $
☐ Return Receipt (electronic) $
☐ Certified Mail Restricted Delivery $
☐ Adult Signature Required $
☐ Adult Signature Restricted Delivery $
Postage
$
Tot
$
Sei
Str
Cit

JUN 11 2025
MIAMI FL 33131

Postmark Here

CURRENT PROPERTY OWNER
315 CARDINAL ST
MIAMI SPRINGS, FL 33166

PS Form 3800, April 2015 PSN 7530-02-000-9047 See Reverse for Instructions

7022 2410 0002 9319 3357

U.S. Postal Service™
CERTIFIED MAIL® RECEIPT
Domestic Mail Only

For delivery information, visit our website at www.usps.com®.

OFFICIAL USE

Certified Mail Fee
$
Extra Services & Fees (check box, add fee as appropriate)
☐ Return Receipt (hardcopy) $
☐ Return Receipt (electronic) $
☐ Certified Mail Restricted Delivery $
☐ Adult Signature Required $
☐ Adult Signature Restricted Delivery $
Postage
$
Total Postage and Fees
$
Sent To
Street and Apt. No., or PO Box No.
City, State, ZIP+4®

Postmark Here

JUN 11 2025
MIAMI FL 33131

7022 2410 0002 9319 3036

CARLOS ERNESTO VELASQUEZ
ZOILA MARITZA RIVERA
290 ESPANADE DR
MIAMI SPRINGS, FL 33166

PS Form 3800, April 2015 PSN 7530-02-000-9047 See Reverse for Instructions

U.S. Postal Service™
CERTIFIED MAIL® RECEIPT
Domestic Mail Only

For delivery information, visit our website at www.usps.com®.

OFFICIAL USE

Certified Mail Fee
$
Extra Services & Fees (check box, add fee as appropriate)
☐ Return Receipt (hardcopy) $
☐ Return Receipt (electronic) $
☐ Certified Mail Restricted Delivery $
☐ Adult Signature Required $
☐ Adult Signature Restricted Delivery $
Postage
$
Total Postage and Fees
$
Sent To
Street and Apt. No., or PO Box No.
City, State, ZIP+4®

Postmark Here

JUN 11 2025
MIAMI FL 33131

7022 2410 0002 9319 2923

301 N ROYAL POINCIANA INC
510 NE 57 ST
MIAMI, FL 33137-2627

PS Form 3800, April 2015 PSN 7530-02-000-9047 See Reverse for Instructions

U.S. Postal Service™
CERTIFIED MAIL® RECEIPT
Domestic Mail Only

For delivery information, visit our website at www.usps.com®.

OFFICIAL USE

Certified Mail Fee
$
Extra Services & Fees (check box, add fee as appropriate)
☐ Return Receipt (hardcopy) $
☐ Return Receipt (electronic) $
☐ Certified Mail Restricted Delivery $
☐ Adult Signature Required $
☐ Adult Signature Restricted Delivery $
Postage
$
Total Postage and Fees
$
Sent To
Street and Apt. No., or PO Box No.
City, State, ZIP+4®

Postmark Here

JUN 11 2025
MIAMI FL 33131

7022 2410 0002 9319 3043

CITY OF MIAMI SPRINGS
201 WESTWARD DR
MIAMI SPRINGS, FL 33166-5259

PS Form 3800, April 2015 PSN 7530-02-000-9047 See Reverse for Instructions

U.S. Postal Service™
CERTIFIED MAIL® RECEIPT
Domestic Mail Only

For delivery information, visit our website at www.usps.com®.

OFFICIAL USE

Certified Mail Fee
$
Extra Services & Fees (check box, add fee as appropriate)
☐ Return Receipt (hardcopy) $
☐ Return Receipt (electronic) $
☐ Certified Mail Restricted Delivery $
☐ Adult Signature Required $
☐ Adult Signature Restricted Delivery $
Postage
$
Total Postage and Fees
$
Sent To
Street and Apt. No., or PO Box No.
City, State, ZIP+4®

Postmark Here

JUN 11 2025
MIAMI FL 33131

7022 2410 0002 9319 3111

LINDA CONNER
515 CARDINAL ST
MIAMI SPRINGS, FL 33166-3957

PS Form 3800, April 2015 PSN 7530-02-000-9047 See Reverse for Instructions

U.S. Postal Service™
CERTIFIED MAIL® RECEIPT
Domestic Mail Only

For delivery information, visit our website at www.usps.com®.

OFFICIAL USE

Certified Mail Fee
$
Extra Services & Fees (check box, add fee as appropriate)
☐ Return Receipt (hardcopy) $
☐ Return Receipt (electronic) $
☐ Certified Mail Restricted Delivery $
☐ Adult Signature Required $
☐ Adult Signature Restricted Delivery $
Postage
$
Total Postage and Fees
$
Sent To
Street and Apt. No., or PO Box No.
City, State, ZIP+4®

Postmark Here

JUN 11 2025
MIAMI FL 33131

7022 2410 0002 9319 2747

CATALINA COLELLA
338 PLOVER AVE
MIAMI SPRINGS, FL 33166

PS Form 3800, April 2015 PSN 7530-02-000-9047 See Reverse for Instructions

U.S. Postal Service™
CERTIFIED MAIL® RECEIPT
Domestic Mail Only

For delivery information, visit our website at www.usps.com®.

OFFICIAL USE

Certified Mail Fee
$
Extra Services & Fees (check box, add fee as appropriate)
☐ Return Receipt (hardcopy) $
☐ Return Receipt (electronic) $
☐ Certified Mail Restricted Delivery $
☐ Adult Signature Required $
☐ Adult Signature Restricted Delivery $
Postage
$
Total Postage and Fees
$
Sent To
Street and Apt. No., or PO Box No.
City, State, ZIP+4®

Postmark Here

JUN 11 2025
MIAMI FL 33131

7022 2410 0002 9319 3241

OLGA C LAWSON
295 NAHKODA DR
MIAMI SPRINGS, FL 33166-4419

PS Form 3800, April 2015 PSN 7530-02-000-9047 See Reverse for Instructions

U.S. Postal Service™
CERTIFIED MAIL® RECEIPT
Domestic Mail Only

For delivery information, visit our website at www.usps.com®.

OFFICIAL USE

Certified Mail Fee
$
Extra Services & Fees (check box, add fee as appropriate)
☐ Return Receipt (hardcopy) $
☐ Return Receipt (electronic) $
☐ Certified Mail Restricted Delivery $
☐ Adult Signature Required $
☐ Adult Signature Restricted Delivery $
Postage
$
Total Postage and Fees
$
Sent To
Street and Apt. No., or PO Box No.
City, State, ZIP+4®

Postmark Here

JUN 11 2025
MIAMI FL 33131

7022 2410 0002 9319 3029

ALICIA GARCIA
180 ESPLANADE DR
MIAMI SPRINGS, FL 33166

PS Form 3800, April 2015 PSN 7530-02-000-9047 See Reverse for Instructions

U.S. Postal Service™
CERTIFIED MAIL® RECEIPT
Domestic Mail Only

For delivery information, visit our website at www.usps.com®.

OFFICIAL USE

Certified Mail Fee
$
Extra Services & Fees (check box, add fee as appropriate)
☐ Return Receipt (hardcopy) $
☐ Return Receipt (electronic) $
☐ Certified Mail Restricted Delivery $
☐ Adult Signature Required $
☐ Adult Signature Restricted Delivery $
Postage
$
Total Postage and Fees
$
Sent To
Street and Apt. No., or PO Box No.
City, State, ZIP+4®

Postmark Here

JUN 11 2025
MIAMI FL 33131

7022 2410 0002 9319 3371

STEVEN OWENS
ORIANA OWENS
525 CARDINAL ST
MIAMI SPRINGS, FL 33166

PS Form 3800, April 2015 PSN 7530-02-000-9047 See Reverse for Instructions

U.S. Postal Service™
CERTIFIED MAIL® RECEIPT
Domestic Mail Only

For delivery information, visit our website at www.usps.com®.

OFFICIAL USE

Certified Mail Fee
$
Extra Services & Fees (check box, add fee as appropriate)
☐ Return Receipt (hardcopy) $
☐ Return Receipt (electronic) $
☐ Certified Mail Restricted Delivery $
☐ Adult Signature Required $
☐ Adult Signature Restricted Delivery $
Postage
$
Total Postage and Fees
$
Sent To
Street and Apt. No., or PO Box No.
City, State, ZIP+4®

Postmark Here

JUN 11 2025
MIAMI FL 33131

7022 2410 0002 9319 3104

JUSTO L VAZQUEZ
JULIETTA RIVERON
435 CARDINAL ST
MIAMI SPRINGS, FL 33166

PS Form 3800, April 2015 PSN 7530-02-000-9047 See Reverse for Instructions

7022 2410 0002 9319 3012

U.S. Postal Service™
CERTIFIED MAIL® RECEIPT
Domestic Mail Only

For delivery information, visit our website at *www.usps.com®*.

OFFICIAL USE

Certified Mail Fee
$

Extra Services & Fees *(check box, add fee as appropriate)*
- ☐ Return Receipt (hardcopy) $ ____
- ☐ Return Receipt (electronic) $ ____
- ☐ Certified Mail Restricted Delivery $ ____
- ☐ Adult Signature Required $ ____
- ☐ Adult Signature Restricted Delivery $ ____

Postage
$

Tot
$
Ser
Stre
City

Postmark Here

JUN 11 2025
MIAMI FL 33131

KENNETH RICHARD AQUINO
545 CARDINAL ST
MIAMI SPRINGS, FL 33166

PS Form 3800, April 2015 PSN 7530-02-000-9047 See Reverse for Instructions

7022 2410 0002 9319 2961

U.S. Postal Service™
CERTIFIED MAIL® RECEIPT
Domestic Mail Only

For delivery information, visit our website at *www.usps.com®*.

OFFICIAL USE

Certified Mail Fee
$

Extra Services & Fees *(check box, add fee as appropriate)*
- ☐ Return Receipt (hardcopy) $ ____
- ☐ Return Receipt (electronic) $ ____
- ☐ Certified Mail Restricted Delivery $ ____
- ☐ Adult Signature Required $ ____
- ☐ Adult Signature Restricted Delivery $ ____

Postage
$

Postmark Here

JUN 11 2025
MIAMI FL 33131

FIRST PRESTYERIAN CHURCH
US OF MIAMI SPRINGS
301 WESTWARD DRIVE
MIAMI SPRINGS, FL 33166

PS Form 3800, April 2015 PSN 7530-02-000-9047 See Reverse for Instructions

7022 2410 0002 9319 2954

U.S. Postal Service™
CERTIFIED MAIL® RECEIPT
Domestic Mail Only

For delivery information, visit our website at *www.usps.com®*.

OFFICIAL USE

Certified Mail Fee
$

Extra Services & Fees *(check box, add fee as appropriate)*
- ☐ Return Receipt (hardcopy) $ ____
- ☐ Return Receipt (electronic) $ ____
- ☐ Certified Mail Restricted Delivery $ ____
- ☐ Adult Signature Required $ ____
- ☐ Adult Signature Restricted Delivery $ ____

Postage

Postmark Here

JUN 11 2025
MIAMI FL 33131

EFREM FIGUEREDO
535 CARDINAL ST
MIAMI SPRINGS, FL 33166-3957

PS Form 3800, April 2015 PSN 7530-02-000-9047 See Reverse for Instructions

7022 2410 0002 9319 3098

U.S. Postal Service™
CERTIFIED MAIL® RECEIPT
Domestic Mail Only

For delivery information, visit our website at *www.usps.com®*.

OFFICIAL USE

Certified Mail Fee
$

Extra Services & Fees *(check box, add fee as appropriate)*
- ☐ Return Receipt (hardcopy) $ ____
- ☐ Return Receipt (electronic) $ ____
- ☐ Certified Mail Restricted Delivery $ ____
- ☐ Adult Signature Required $ ____
- ☐ Adult Signature Restricted Delivery $ ____

Postage

Postmark Here

JUN 11 2025
MIAMI FL 33131

JOSE P ALVAREZ
GABRIELA IRIAS
160 ESPLANADE DR
MIAMI SPRINGS, FL 33166

PS Form 3800, April 2015 PSN 7530-02-000-9047 See Reverse for Instructions

City of Miami Springs
201 Westward Drive Miami Springs, FL 33166
Phone: (305) 805-5034 Fax: (305) 805-5036 Website: www.miamisprings-fl.gov

NOTICE OF PUBLIC HEARING

The Miami Springs City Council will meet as the Board of Appeals on **Monday, June 30, 2025,** in the Council Chambers at City Hall, 201 Westward Drive, at **6:00 PM**, at which time the matter(s) set forth below will be heard.

Appellant Information	Property Subject of Appeal
Michelle Ferreira Owner of 300 Falcon Avenue Folio No.: 05-3118-016-1591 Zoning: R-1C Single Family Residential Lot Size: 7,500 sq. ft.	200 N Esplanade Drive Owners: Jovany Jimenez, Ambar Sara Preval Folio No.: 05-3118-016-1590 Zoning: R-1C Single Family Residential Lot Size: 7,500 sq. ft.

Michelle Ferreira (the "Applicant" or "Appellant"), the owner of the property located at 300 Falcon Avenue, has filed an administrative appeal with the City of Miami Springs relating to the City's administrative determination of setbacks applicable to her neighbor's property located at 200 N Esplanade Drive ("Esplanade Property"). The Applicant requests that a building permit issued for the Esplanade Property be revoked and that a stop work order be issued.

On February 26, 2025, the City's Board of Adjustment held a hearing and recommended that the appeal be denied and that the City's Administrative Official's decision from which the appeal was taken be affirmed. The City's Administrative Official's decision provides that the location of the front yard of the Esplanade Property is on Falcon Avenue and the yard of the Esplanade Property adjacent to the Applicant's property at 300 Falcon Avenue is a side yard. On April 28, 2025, the City Council affirmed the Board of Adjustment's recommendation. The Applicant has appealed the City Council's decision. The City Council will meet as a Board of Appeals on Monday, June 30, 2025 to consider the matter.

You are invited to attend the meeting(s) in person, or you may express your comments in writing to the Office of the City Clerk no later than noon (12:00 p.m.) on the day of the meeting(s).

The above hearing(s) may be continued or deferred to a new date and time certain without further notice provided the date and time of the continuance or deferral is announced at the hearing(s). The relevant application and legislation, as applicable, may be inspected at the Office of the City Clerk during regular business hours. The meeting agenda(s) is/are available online at: https://www.miamisprings-fl.gov/meetings.

All interested parties will be heard. If a person decides to appeal any decision made at this hearing, they will need a record of the proceedings and, for such purpose, may need to ensure that a verbatim record of the proceedings is made, which record includes the testimony and evidence upon which the appeal is to be based (F.S. 286.0105). The City does not furnish verbatim transcripts. Interested parties should make the necessary arrangements for verbatim transcripts. For further information regarding the advertised items, contact the City Clerk at (305) 805-5006.

In accordance with the Americans with Disabilities Act and Florida Statutes §286.26, persons with disabilities needing special accommodation to participate in this proceeding should contact the City Clerk, no later than four days prior to the proceeding at (305) 805-5006 for assistance. If hearing impaired, contact the Florida Relay Service Number: (800) 955-8771 (TDD).

Erika Gonzalez-Santamaria, MMC, City Clerk
City of Miami Springs, Florida

rdr miami | public hearing notification services
certified lists of property owners within a specific radius + radius maps + mailing labels + mailouts + notice of public hearing site posting
rdrmiami.com | diana@rdrmiami.com | 305.498.1614

May 7, 2025

City of Miami Springs
201 Westward Drive
Miami Springs, FL 33166

Re: Property owners within 500 feet of:
SUBJECT: 200 North Esplanade Drive, Miami Springs, FL 33166
FOLIO NUMBER: 05-3118-016-1590

This is to certify that the attached ownership list, map and mailing labels are a complete and accurate representation of the real estate property and property owners within 500 feet radius of the external boundaries of the subject property listed above, including the subject property. This reflects the records on file in the Property Appraisers' Office as of 5/5/2025.

Sincerely,

RDR Miami | Diana B. Rio, LEED®AP

Total number of property owners without repetition: **50, including 0 international**

Rio Development Resources, LLC ("RDR") has used its best efforts in collecting the information published in this report and the findings contained in the report are based solely and exclusively on information provided by you and information gathered from public records and that local government. By acceptance of this report, you agree to hold RDR harmless and indemnify RDR from any and all losses, damages, liabilities and expenses which can be claimed against RDR caused by or related to this report.

301 N ROYAL POINCIANA INC
510 NE 57 ST
MIAMI, FL 33137-2627

ALICIA GARCIA
180 ESPLANADE DR
MIAMI SPRINGS, FL 33166

ANTHONY ANDERSON
ZAIDA ANDERSON
VICTORINO GARCIA
325 CARDINAL ST
MIAMI SPRINGS, FL 33166

ANTONIO J RUBIO
STEPANKA HOFMANOVA
210 ESPLANADE DR
MIAMI SPRINGS, FL 33166

CARLOS ERNESTO VELASQUEZ
ZOILA MARITZA RIVERA
290 ESPANADE DR
MIAMI SPRINGS, FL 33166

CARLOS J BETANCOURT
190 PARK STREET
MIAMI SPRINGS, FL 33166

CATALINA COLELLA
338 PLOVER AVE
MIAMI SPRINGS, FL 33166

CITY OF MIAMI SPRINGS
201 WESTWARD DR
MIAMI SPRINGS, FL 33166-5259

EDWARD CALLAHAN
440 CARDINAL ST
MIAMI SPRINGS, FL 33166-3960

EFREM FIGUEREDO
535 CARDINAL ST
MIAMI SPRINGS, FL 33166-3957

EGM HOLDINGS GROUP INC
4920 NW 165 ST
MIAMI GARDENS, FL 33014

ERIC BRESSEAU
280 ESPLANADE DR
MIAMI SPRINGS, FL 33166

FIRST PRESTYERIAN CHURCH
US OF MIAMI SPRINGS
301 WESTWARD DRIVE
MIAMI SPRINGS, FL 33166

GARY L VILLERE &
JUDITH L ASHFORD TRS
2160 E FRY BLVD STE C-5 #335
SIERRA VISTA, AZ 85635

GREGORY L CATES &W CAROL R
326 FALCON AVE
MIAMI SPRINGS, FL 33166-4414

GUILLERMO CARMONA
JOSE A HERNANDEZ
5935 NW 38 ST
VIRGINIA GARDENS, FL 33166

HH HOLDINGS GROUP INC
1046 E 16 ST
HIALEAH, FL 33010

HHD INVESTMENTS LLC
307 N ROYAL POINCIANA BLVD
MIAMI SPRINGS, FL 33166

IDANIA G CARBALLO HARRIS
250 ESPLANADE DR
MIAMI SPRINGS, FL 33166

JESUS M ECENARRO LE
CELIA ECENARRO LE
REM SYDNEY AMAYA ECENARRO
243 NAHKODA DR
MIAMI SPRINGS, FL 33166

JONATHAN A SHERRY
KELLY A SPEAR
270 N ESPLANADE DR
MIAMI SPRINGS, FL 33166

JOSE A ALARCON
MARIBEL REDONDO
291 NAHKODA DR
MIAMI SPRINGS, FL 33166

JOSE P ALVAREZ
GABRIELA IRIAS
160 ESPLANADE DR
MIAMI SPRINGS, FL 33166

JOSE R REYES
450 CARDINAL ST
MIAMI SPRINGS, FL 33166

JOVANY JIMENEZ
AMBAR SARA PREVAL
3145 NW 32 ST
MIAMI, FL 33142

JUSTO L VAZQUEZ
JULIETTA RIVERON
435 CARDINAL ST
MIAMI SPRINGS, FL 33166

KEN KAMIYA &W ROSA
362 FALCON AVE
MIAMI SPRINGS, FL 33166-4414

KENNETH RICHARD AQUINO
545 CARDINAL ST
MIAMI SPRINGS, FL 33166

LINDA CONNER
515 CARDINAL ST
MIAMI SPRINGS, FL 33166-3957

MANUEL ALFONSO &W LUCINDA CO TRS
339 FALCON AVE
MIAMI SPRINGS, FL 33166

MARCUS R ANDERSON
CLAUDIA M PRUNA ANDERSON
338 FALCON AVE
MIAMI SPRINGS, FL 33166

MARGARET WATTS LE
REM DAVID CATO
REM JOEL B WATTS
415 CARDINAL ST
MIAMI SPRINGS, FL 33166

MARION D ZAMOTIN TRS
MARION D ZAMOTIN REV LIV TR
259 NAHKODA DR
MIAMI SPRINGS, FL 33166

MICHELLE AGUILAR
ROLANDO GONZALEZ
351 PLOVER AVE
MIAMI SPRINGS, FL 33166

MICHELLE N FERREIRA TRS
MICHELLE N FERREIRA REVOCABLE TR
300 FALCON AVE
MIAMI SPRINGS, FL 33166

NICKOLAS JAMES FEIJOO
ANOTNIO G FEIJOO
SHERRY FEIJOO
327 FALCON AVE
MIAMI SPRINGS, FL 33166

OLGA C LAWSON
295 NAHKODA DR
MIAMI SPRINGS, FL 33166-4419

PENNY HEINES
425 CARDINAL ST
MIAMI SPRINGS, FL 33166-3959

POINCIANA UNITED METHODIST
CHURCH INC
300 N ROYAL POINCIANA BLVD
MIAMI SPRINGS, FL 33166-4429

PONCIANA SPRINGS LLC
5805 BLUE LAGOON DR STE 300
MIAMI, FL 33126

RICHARD BENNETTI &W MELISSA
315 FALCON AVE
MIAMI SPRINGS, FL 33166-4413

ROALNDO RIVERO JR
MARIA ELENA FONT
267 NAHKODA DR
MIAMI SPRINGS, FL 33166

ROBERT D PLATZ TRS
SARA J PLATZ TRS
SARA J PLATZ TRUST AGREEMENT
380 FALCON AVE
MIAMI SPRINGS, FL 33166

SCHOOL BOARD OF MIAMI-DADE COUNTY
1450 NE 2 AVE
MIAMI, FL 33132-1308

STEVEN OWENS
ORIANA OWENS
525 CARDINAL ST
MIAMI SPRINGS, FL 33166

THOMAS RAYMOND CUMMINGS LE
REM CATHERINE LYNN CUMMINGS
363 FALCON AVE
MIAMI SPRINGS, FL 33166

TOMAS F HERNANDEZ &W ALINA
348 PLOVER AVE
MIAMI SPRINGS, FL 33166-4422

TOWER APARTMENTS LLC
PO BOX 432505
MIAMI, FL 33243

YULIER POLO
225 NAHKODA DR
MIAMI SPRINGS, FL 33166

CURRENT PROPERTY OWNER
315 CARDINAL ST
MIAMI SPRINGS, FL 33166

NAME 1	NAME 2	NAME 3	ADDRESS	CITY	STATE	ZIP	COUNTRY
301 N ROYAL POINCIANA INC			510 NE 57 ST	MIAMI	FL	33137-2627	USA
ALICIA GARCIA			180 ESPLANADE DR	MIAMI SPRINGS	FL	33166	USA
ANTHONY ANDERSON	ZAIDA ANDERSON	VICTORINO GARCIA	325 CARDINAL ST	MIAMI SPRINGS	FL	33166	USA
ANTONIO J RUBIO	STEPANKA HOFMANOVA		210 ESPLANADE DR	MIAMI SPRINGS	FL	33166	USA
CARLOS ERNESTO VELASQUEZ	ZOILA MARITZA RIVERA		290 ESPANADE DR	MIAMI SPRINGS	FL	33166	USA
CARLOS J BETANCOURT			190 PARK STREET	MIAMI SPRINGS	FL	33166	USA
CATALINA COLELLA			338 PLOVER AVE	MIAMI SPRINGS	FL	33166	USA
CITY OF MIAMI SPRINGS			201 WESTWARD DR	MIAMI SPRINGS	FL	33166-5259	USA
EDWARD CALLAHAN			440 CARDINAL ST	MIAMI SPRINGS	FL	33166-3960	USA
EFREM FIGUEREDO			535 CARDINAL ST	MIAMI SPRINGS	FL	33166-3957	USA
EGM HOLDINGS GROUP INC			4920 NW 165 ST	MIAMI GARDENS	FL	33014	USA
ERIC BRESSEAU			280 ESPLANADE DR	MIAMI SPRINGS	FL	33166	USA
FIRST PRESTYERIAN CHURCH	US OF MIAMI SPRINGS		301 WESTWARD DRIVE	MIAMI SPRINGS	FL	33166	USA
GARY L VILLERE &	JUDITH L ASHFORD TRS		2160 E FRY BLVD STE C-5 #335	SIERRA VISTA	AZ	85635	USA
GREGORY L CATES &W CAROL R			326 FALCON AVE	MIAMI SPRINGS	FL	33166-4414	USA
GUILLERMO CARMONA	JOSE A HERNANDEZ		5935 NW 38 ST	VIRGINIA GARDENS	FL	33166	USA
HH HOLDINGS GROUP INC			1046 E 16 ST	HIALEAH	FL	33010	USA
HHD INVESTMENTS LLC			307 N ROYAL POINCIANA BLVD	MIAMI SPRINGS	FL	33166	USA
IDANIA G CARBALLO HARRIS			250 ESPLANADE DR	MIAMI SPRINGS	FL	33166	USA
JESUS M ECENARRO LE	CELIA ECENARRO LE	REM SYDNEY AMAYA ECENARRO	243 NAHKODA DR	MIAMI SPRINGS	FL	33166	USA
JONATHAN A SHERRY	KELLY A SPEAR		270 N ESPLANADE DR	MIAMI SPRINGS	FL	33166	USA
JOSE A ALARCON	MARIBEL REDONDO		291 NAHKODA DR	MIAMI SPRINGS	FL	33166	USA
JOSE P ALVAREZ	GABRIELA IRIAS		160 ESPLANADE DR	MIAMI SPRINGS	FL	33166	USA
JOSE R REYES			450 CARDINAL ST	MIAMI SPRINGS	FL	33166	USA
JOVANY JIMENEZ	AMBAR SARA PREVAL		3145 NW 32 ST	MIAMI	FL	33142	USA
JUSTO L VAZQUEZ	JULIETTA RIVERON		435 CARDINAL ST	MIAMI SPRINGS	FL	33166	USA
KEN KAMIYA &W ROSA			362 FALCON AVE	MIAMI SPRINGS	FL	33166-4414	USA
KENNETH RICHARD AQUINO			545 CARDINAL ST	MIAMI SPRINGS	FL	33166	USA
LINDA CONNER			515 CARDINAL ST	MIAMI SPRINGS	FL	33166-3957	USA
MANUEL ALFONSO &W LUCINDA CO TRS			339 FALCON AVE	MIAMI SPRINGS	FL	33166	USA
MARCUS R ANDERSON	CLAUDIA M PRUNA ANDERSON		338 FALCON AVE	MIAMI SPRINGS	FL	33166	USA
MARGARET WATTS LE	REM DAVID CATO	REM JOEL B WATTS	415 CARDINAL ST	MIAMI SPRINGS	FL	33166	USA
MARION D ZAMOTIN TRS	MARION D ZAMOTIN REV LIV TR		259 NAHKODA DR	MIAMI SPRINGS	FL	33166	USA
MICHELLE AGUILAR	ROLANDO GONZALEZ		351 PLOVER AVE	MIAMI SPRINGS	FL	33166	USA
MICHELLE N FERREIRA TRS	MICHELLE N FERREIRA REVOCABLE TR		300 FALCON AVE	MIAMI SPRINGS	FL	33166	USA
NICKOLAS JAMES FEIJOO	ANOTNIO G FEIJOO	SHERRY FEIJOO	327 FALCON AVE	MIAMI SPRINGS	FL	33166	USA
OLGA C LAWSON			295 NAHKODA DR	MIAMI SPRINGS	FL	33166-4419	USA
PENNY HEINES			425 CARDINAL ST	MIAMI SPRINGS	FL	33166-3959	USA
POINCIANA UNITED METHODIST	CHURCH INC		300 N ROYAL POINCIANA BLVD	MIAMI SPRINGS	FL	33166-4429	USA
PONCIANA SPRINGS LLC			5805 BLUE LAGOON DR STE 300	MIAMI	FL	33126	USA
RICHARD BENNETTI &W MELISSA			315 FALCON AVE	MIAMI SPRINGS	FL	33166-4413	USA
ROALNDO RIVERO JR	MARIA ELENA FONT		267 NAHKODA DR	MIAMI SPRINGS	FL	33166	USA
ROBERT D PLATZ TRS	SARA J PLATZ TRS	SARA J PLATZ TRUST AGREEMENT	380 FALCON AVE	MIAMI SPRINGS	FL	33166	USA
SCHOOL BOARD OF MIAMI-DADE COUNTY			1450 NE 2 AVE	MIAMI	FL	33132-1308	USA
STEVEN OWENS	ORIANA OWENS		525 CARDINAL ST	MIAMI SPRINGS	FL	33166	USA
THOMAS RAYMOND CUMMINGS LE	REM CATHERINE LYNN CUMMINGS		363 FALCON AVE	MIAMI SPRINGS	FL	33166	USA
TOMAS F HERNANDEZ &W ALINA			348 PLOVER AVE	MIAMI SPRINGS	FL	33166-4422	USA
TOWER APARTMENTS LLC			PO BOX 432505	MIAMI	FL	33243	USA
YULIER POLO			225 NAHKODA DR	MIAMI SPRINGS	FL	33166	USA
CURRENT PROPERTY OWNER			315 CARDINAL ST	MIAMI SPRINGS	FL	33166	USA

rdr miami | public hearing notification services
certified lists of property owners within a specific radius + radius maps + mailing labels + mailouts + notice of public hearing site posting
rdrmiami.com | diana@rdrmiami.com | 305.498.1614

500' RADIUS MAP (N.T.S.)

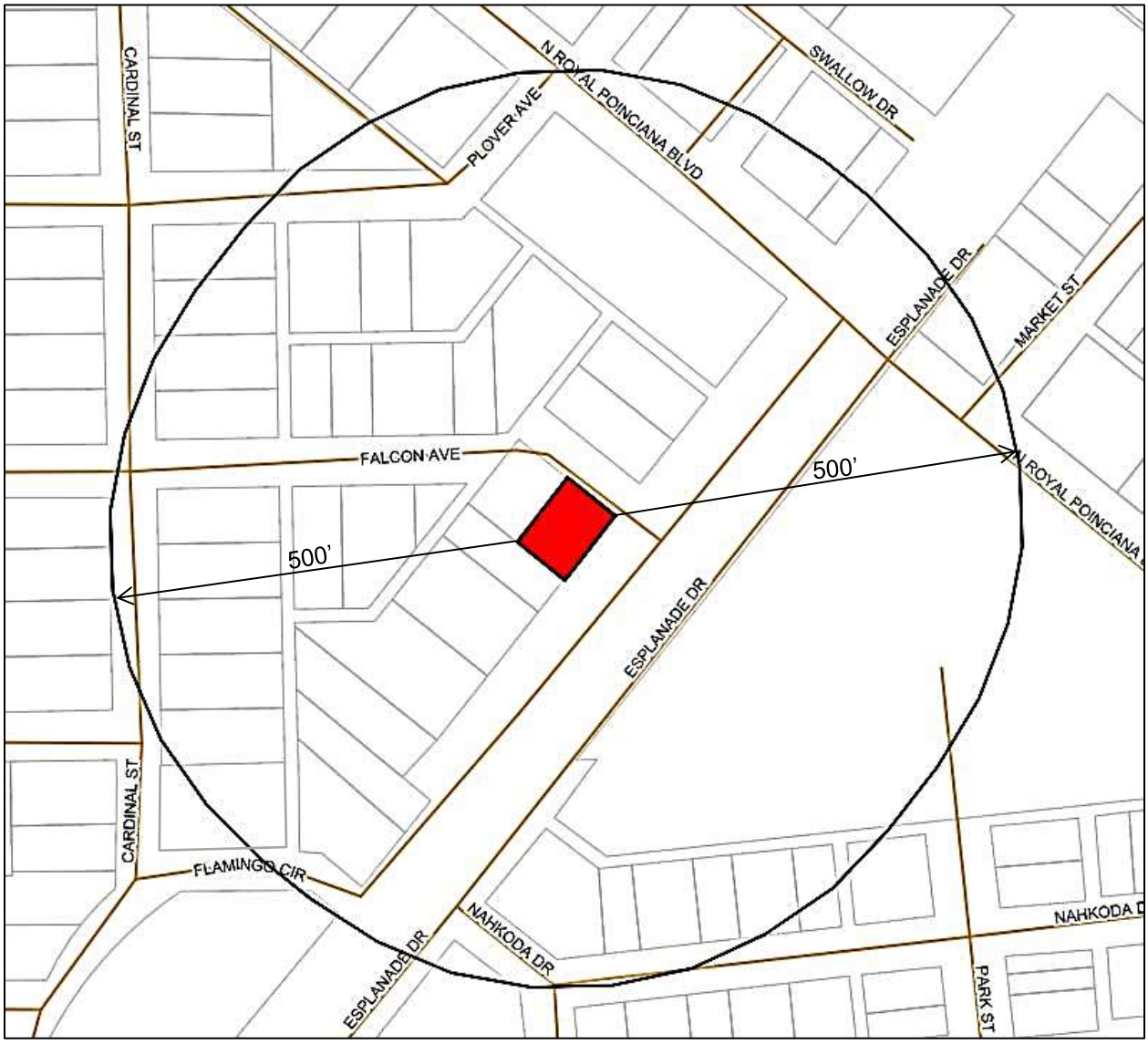

SUBJECT: 200 North Esplanade Drive, Miami Springs, FL 33166
FOLIO NUMBER: 05-3118-016-1590

200 N. Esplanade Drive

Appeal of Administrative Decision

Section 150-002(C)

(85)*Yard, front*. A yard extending across the front of a lot, and being the minimum horizontal distance between the front lot line and the nearest part of the main building. On corner lots, the front yard **shall** be considered as adjacent to the street upon which the lot has its least dimension.

(86)*Yard, rear*. A yard extending across the rear of a lot, and being the required minimum horizontal distance between the rear lot line and the rear of the nearest part of the main building. The rear yard **shall** be that portion of the lot that is opposite and most distant from the front yard.

The Undivided Property

- The undivided property measured 150’ x 100’ and had it’s least dimension street frontage along Esplanade Drive.

- A house was built on this property in or around 1947

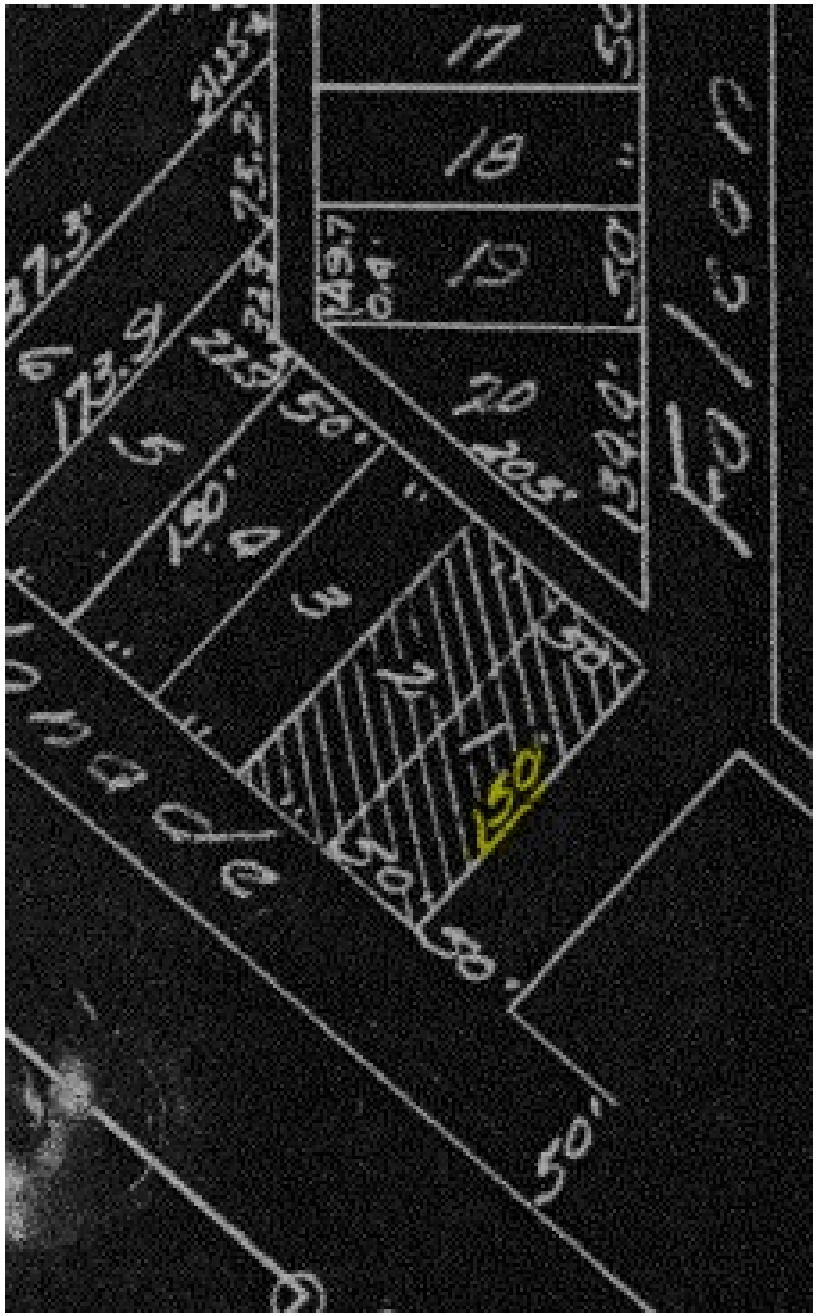

Yards Before Waiver of Plat

- Original 150’x 100’ site.
  - 100 feet of frontage on Esplanade Dr.
  - 150 feet of frontage on Falcon Ave.
  - Per Code, front yard is along Esplanade Dr.

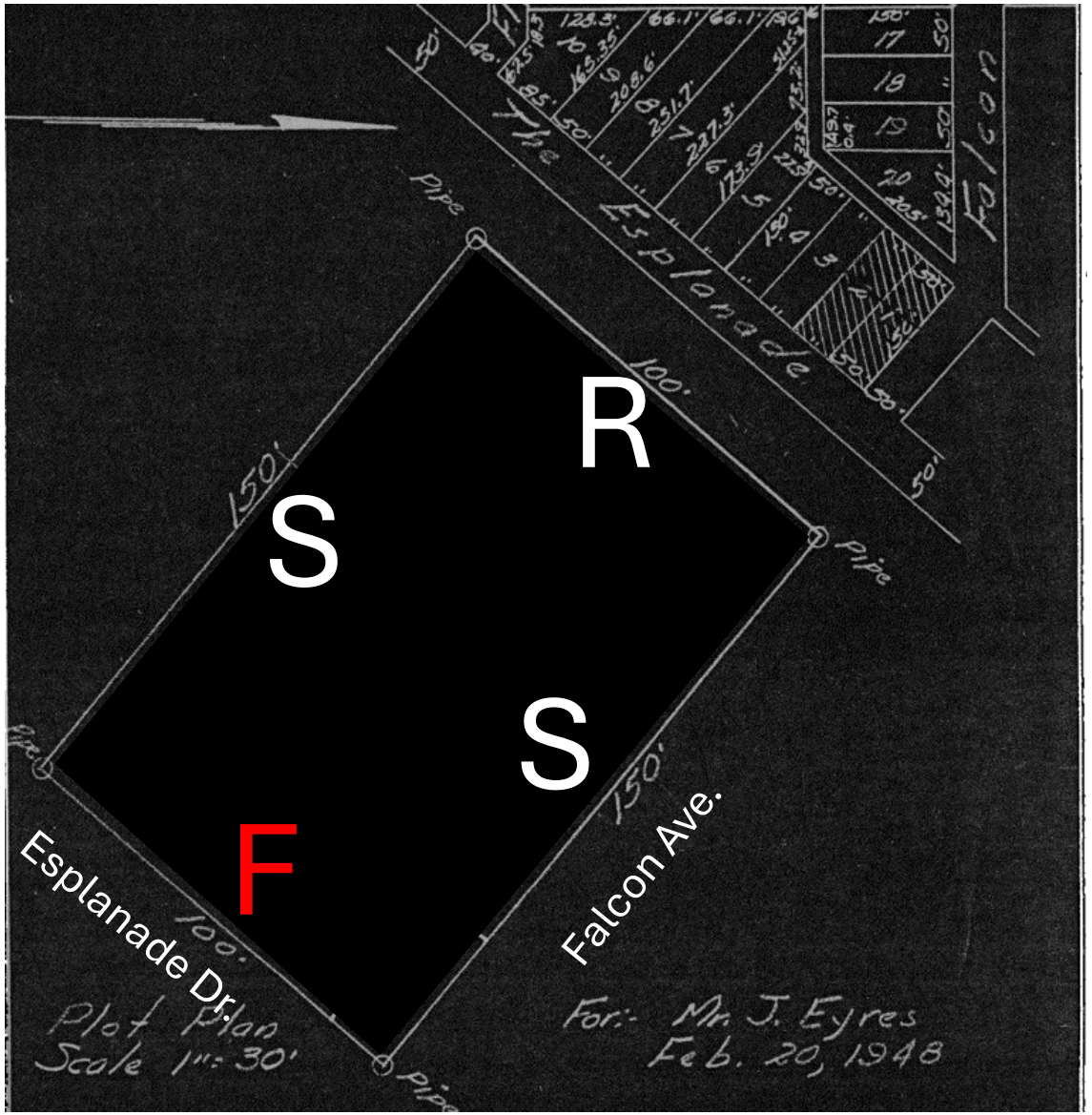

Yards After Waiver of Plat

- Original 150’x 100’ site split into two 75’ x 100’ sites on August 13, 1984:
  - Corner: 200 N. Esplanade Dr.
    - 75 feet of frontage on Falcon Ave
    - 100 feet of frontage on Esplanade Dr.

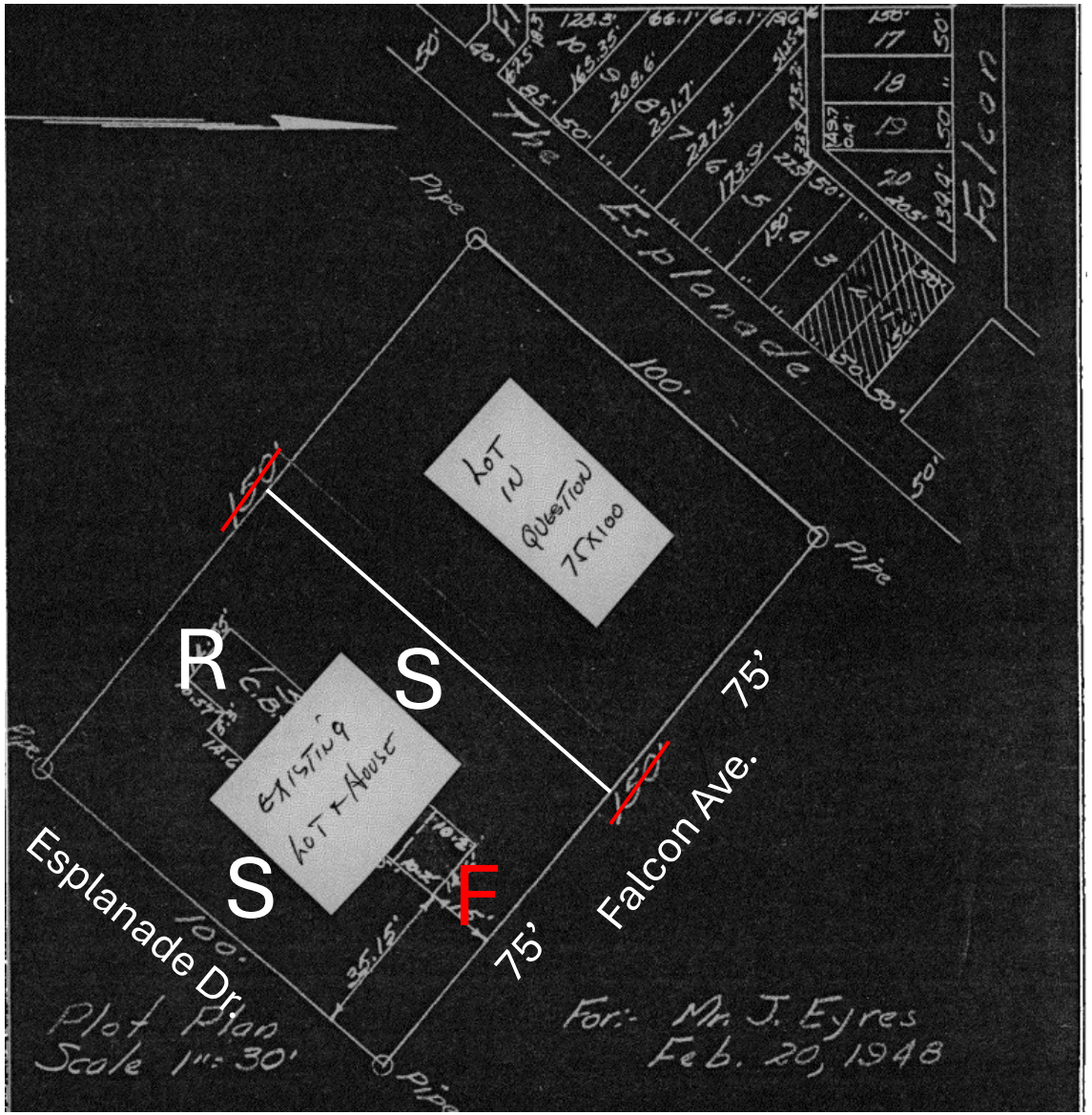

Yards After Waiver of Plat

- Per Section 150-002(C)(85), the front yard of the corner property is now on **Falcon Avenue**.

- Falcon Avenue is the abutting street frontage with the least dimension.

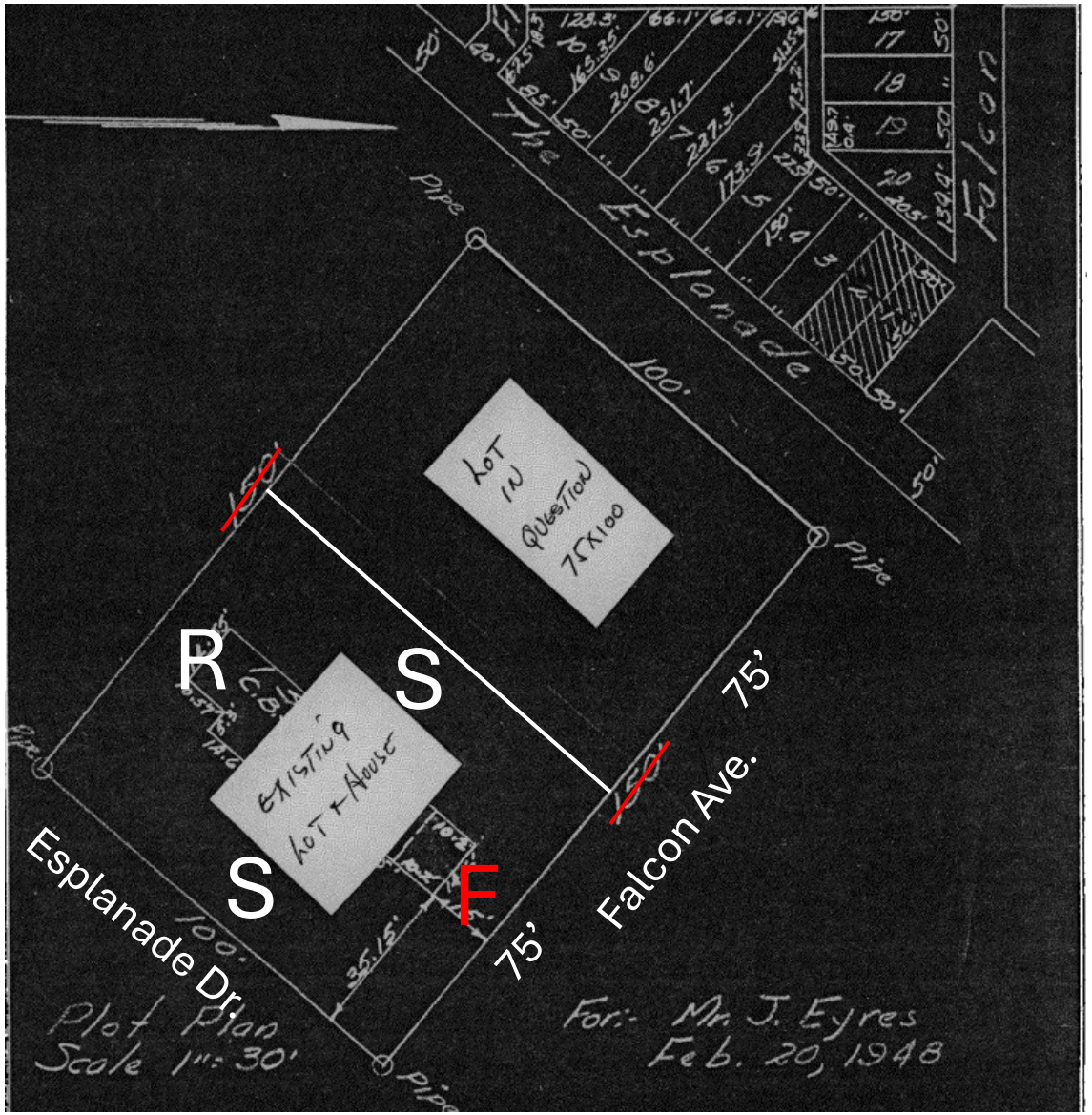

Lot Dimensions of 200 N. Esplanade

- Following the Waiver of Plat, the corner property had:
  - 75 feet of frontage on Falcon Avenue
  - 100 feet of frontage on N. Esplanade Drive

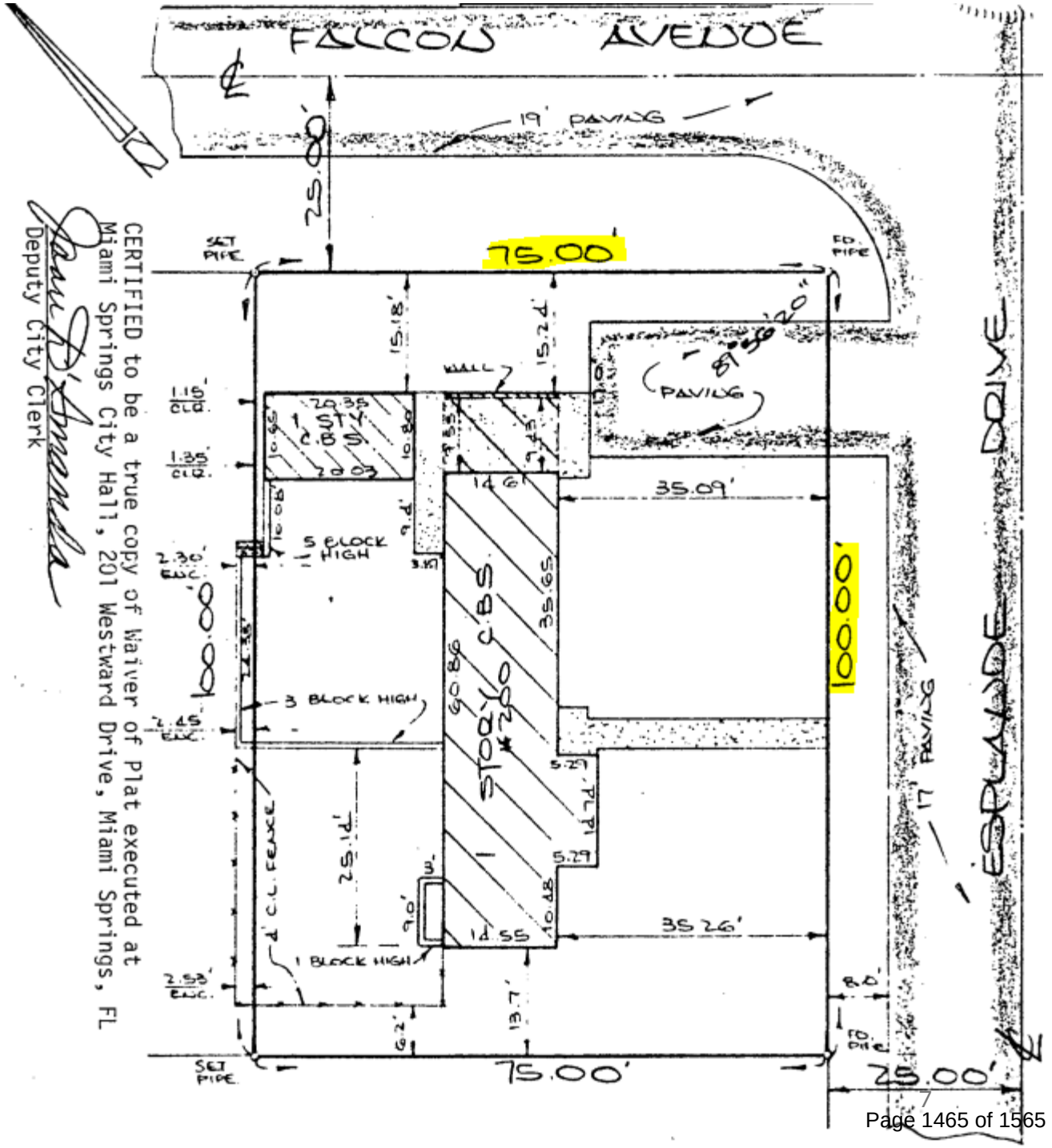

June 20, 1984 Letter

- Letter is Advisory Only

> In compliance with your request, this letter is to advise you of the City's requirements should the owner of the 100' x 150' lot located at 200 Esplanade Drive wish to subdivide the lot into two 75'x100' lots.

- This letter is **NOT** the Waiver of Plat approval!
- The information in the letter is **NOT** included as conditions to the Waiver of Plat.

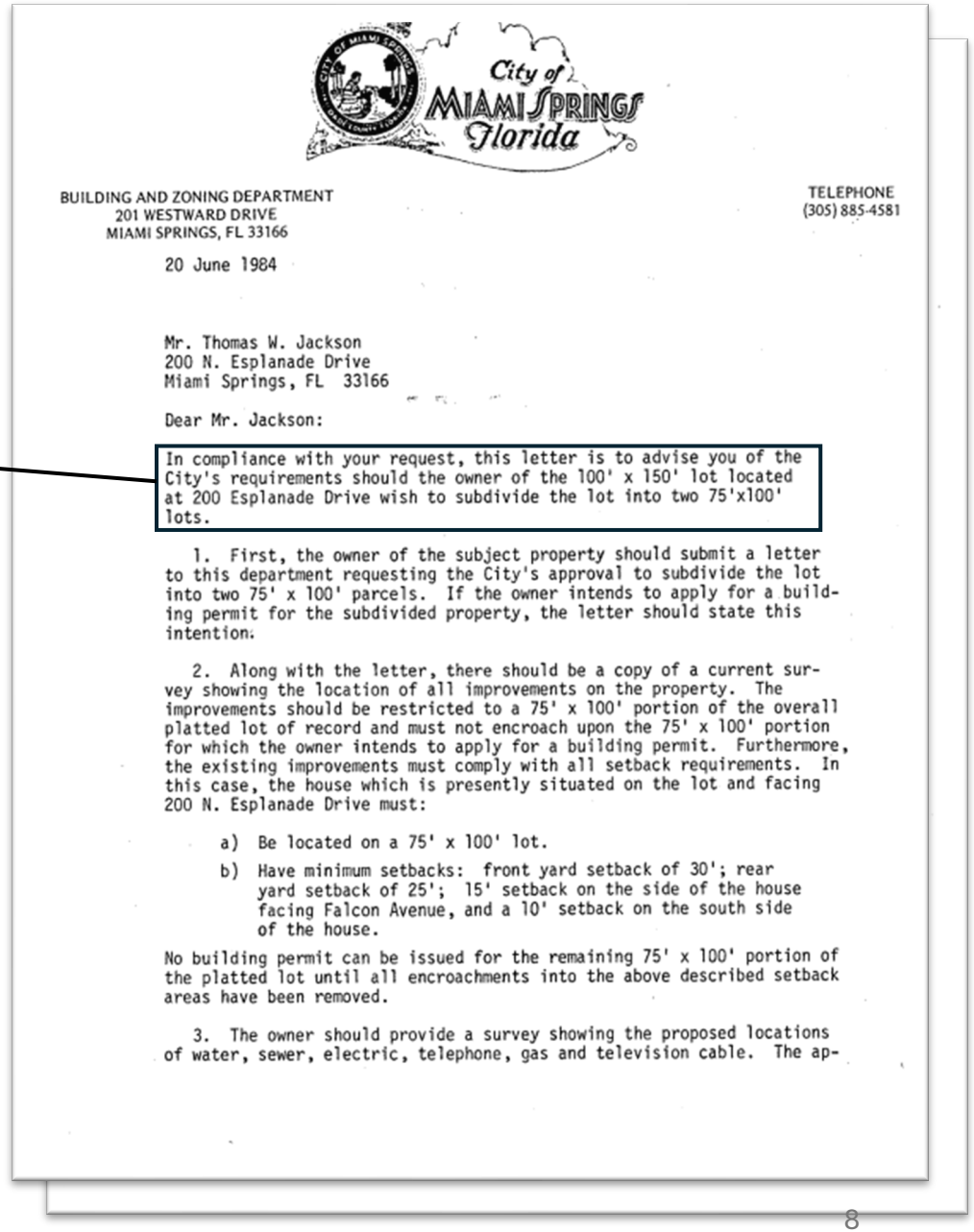

City of MIAMI SPRINGS Florida

BUILDING AND ZONING DEPARTMENT
201 WESTWARD DRIVE
MIAMI SPRINGS, FL 33166

TELEPHONE
(305) 885-4581

20 June 1984

Mr. Thomas W. Jackson
200 N. Esplanade Drive
Miami Springs, FL 33166

Dear Mr. Jackson:

In compliance with your request, this letter is to advise you of the City's requirements should the owner of the 100' x 150' lot located at 200 Esplanade Drive wish to subdivide the lot into two 75'x100' lots.

1. First, the owner of the subject property should submit a letter to this department requesting the City's approval to subdivide the lot into two 75' x 100' parcels. If the owner intends to apply for a building permit for the subdivided property, the letter should state this intention.

2. Along with the letter, there should be a copy of a current survey showing the location of all improvements on the property. The improvements should be restricted to a 75' x 100' portion of the overall platted lot of record and must not encroach upon the 75' x 100' portion for which the owner intends to apply for a building permit. Furthermore, the existing improvements must comply with all setback requirements. In this case, the house which is presently situated on the lot and facing 200 N. Esplanade Drive must:

a) Be located on a 75' x 100' lot.

b) Have minimum setbacks: front yard setback of 30'; rear yard setback of 25'; 15' setback on the side of the house facing Falcon Avenue, and a 10' setback on the south side of the house.

No building permit can be issued for the remaining 75' x 100' portion of the platted lot until all encroachments into the above described setback areas have been removed.

3. The owner should provide a survey showing the proposed locations of water, sewer, electric, telephone, gas and television cable. The ap-

1984 Waiver of Plat
200 N. Esplanade Drive

Approved August 13, 1984

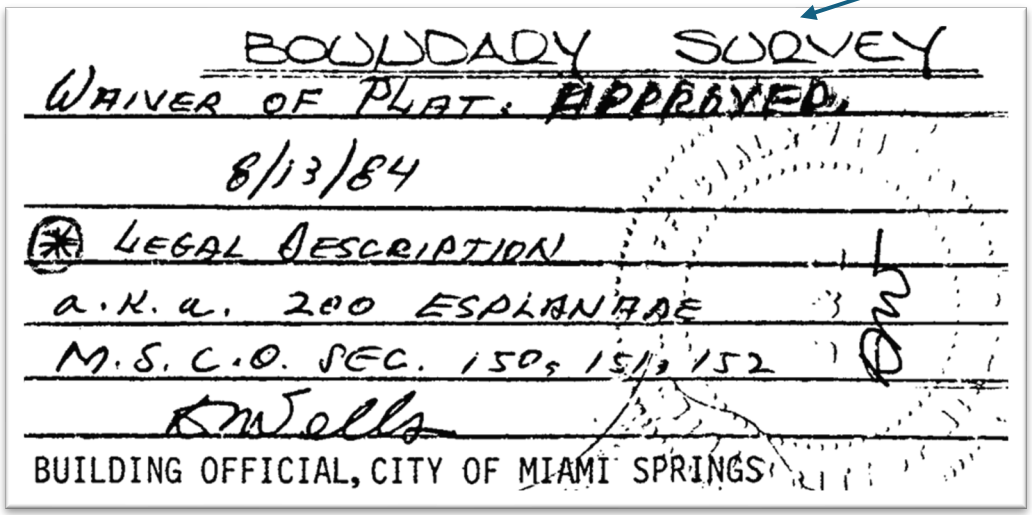
BOUNDARY SURVEY
WAIVER OF PLAT: APPROVED
8/13/84
LEGAL DESCRIPTION
a.k.a. 200 ESPLANADE
M.S.C.O. SEC. 150, 151, 152
K.W. Wells
BUILDING OFFICIAL, CITY OF MIAMI SPRINGS

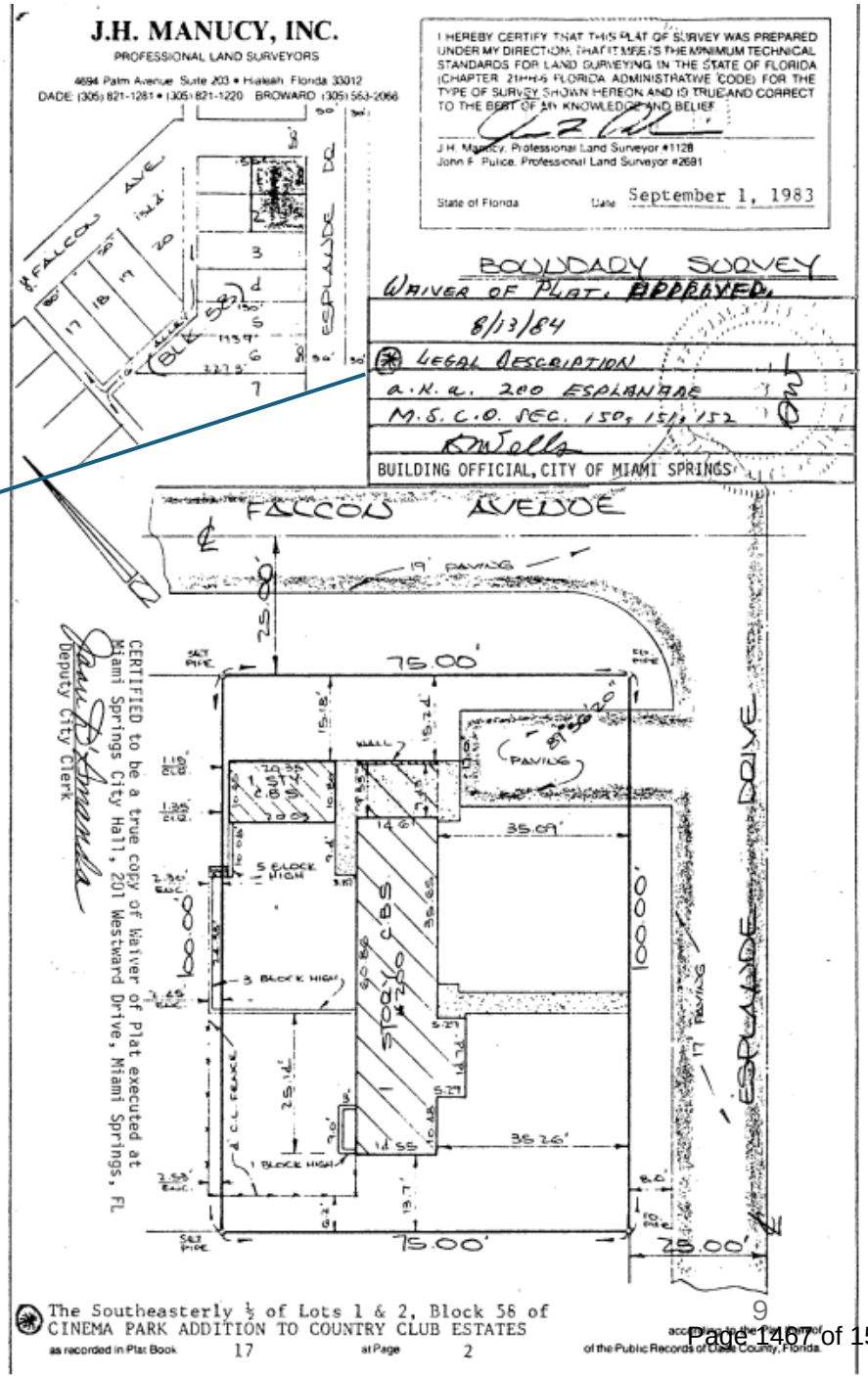

1984 Waiver of Plat
300 Falcon Avenue

Approved August 13, 1984

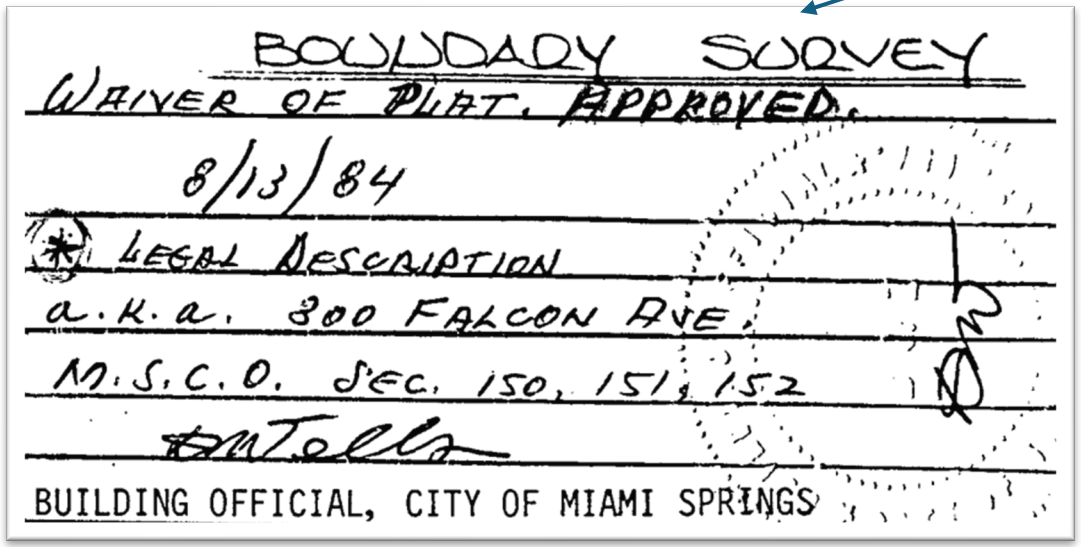

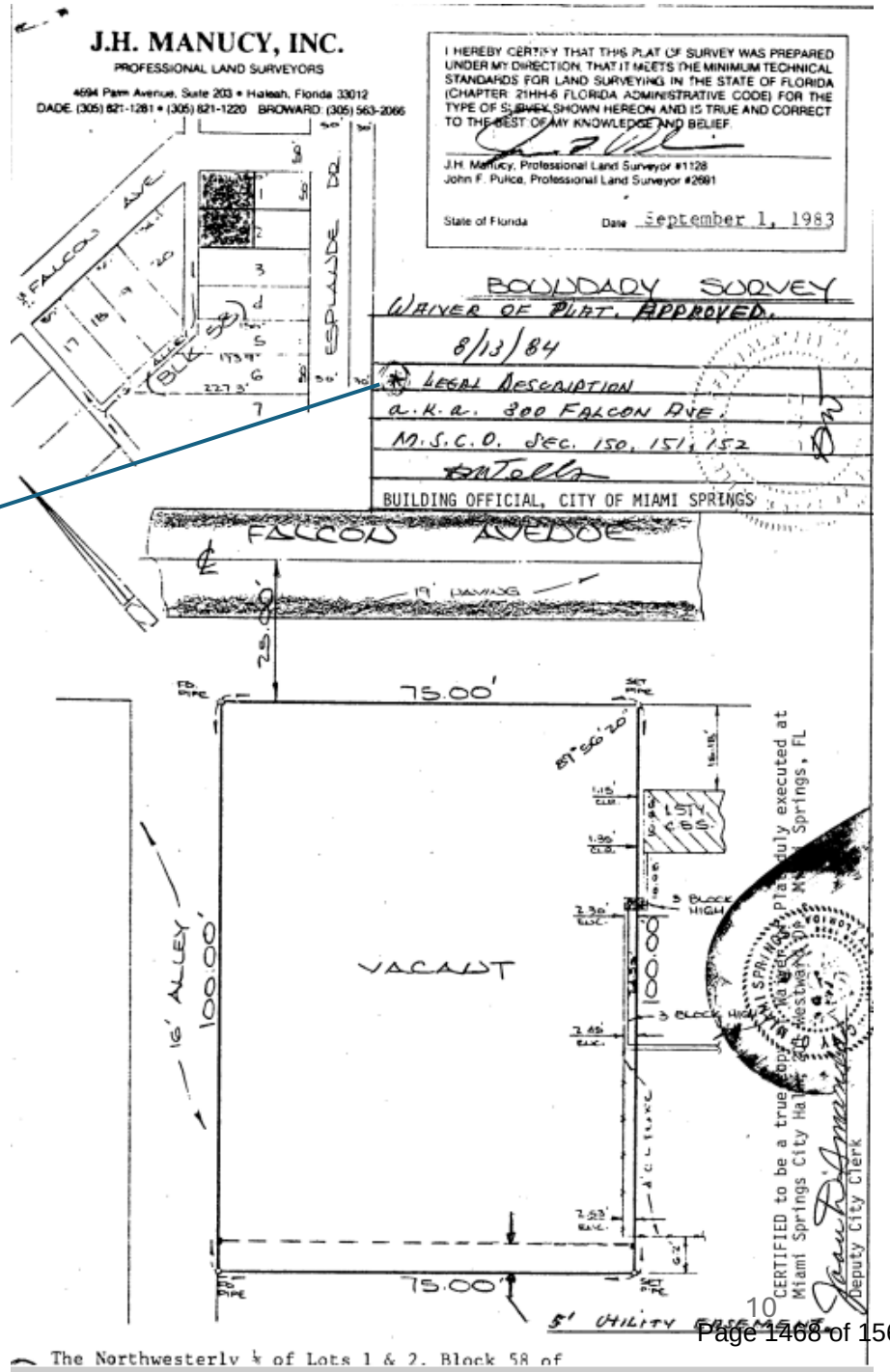

June 20, 1984 Letter

- Setbacks contrary to City Code
  - Letter's setbacks violate 150-002(C)(85)

b) Have minimum setbacks: front yard setback of 30'; rear yard setback of 25'; 15' setback on the side of the house facing Falcon Avenue, and a 10' setback on the south side of the house.

- Required that Structures Violating Setbacks be Removed

No building permit can be issued for the remaining 75' x 100' portion of the platted lot until all encroachments into the above described setback areas have been removed.

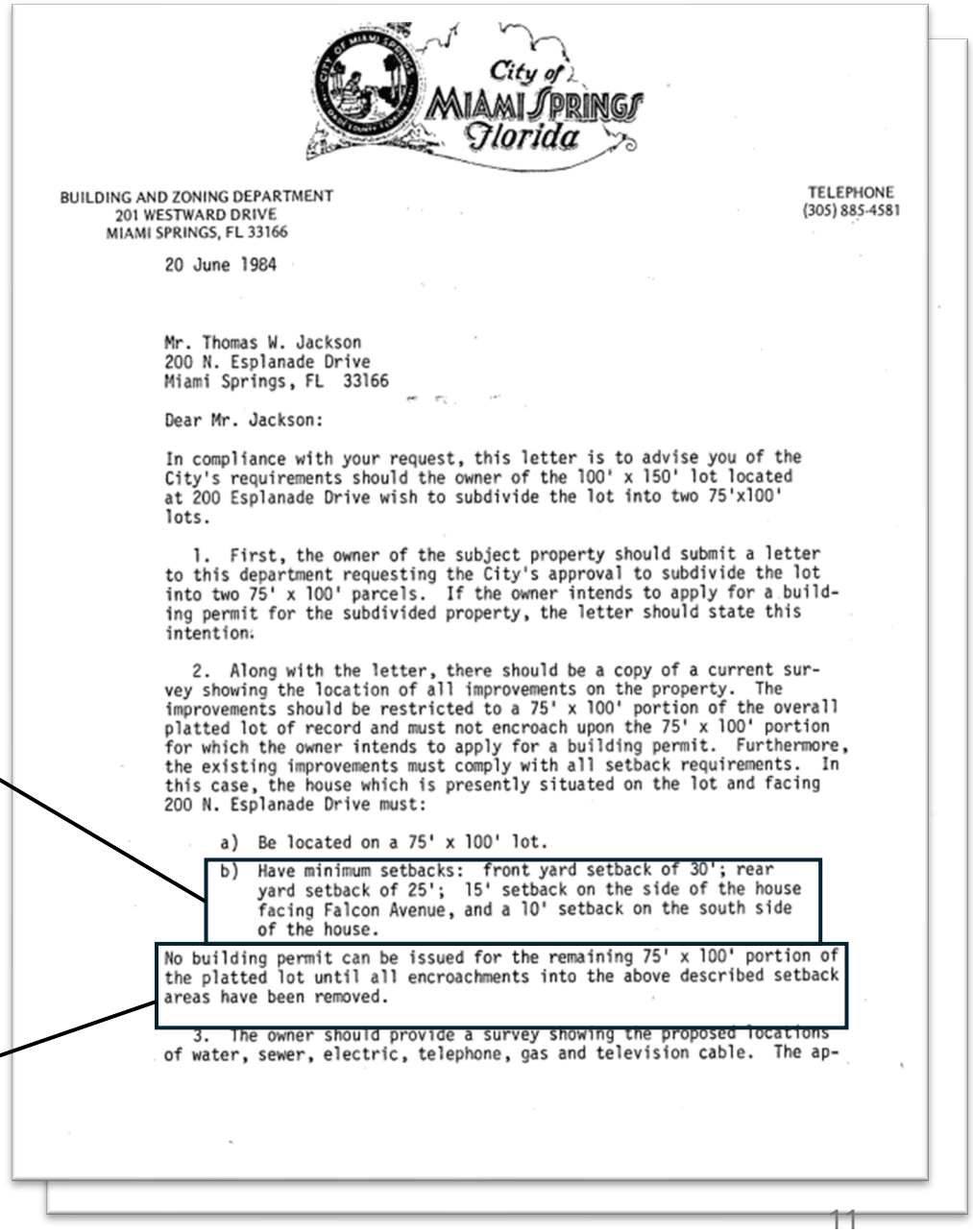

City of MIAMI SPRINGS Florida

BUILDING AND ZONING DEPARTMENT
201 WESTWARD DRIVE
MIAMI SPRINGS, FL 33166

TELEPHONE
(305) 885-4581

20 June 1984

Mr. Thomas W. Jackson
200 N. Esplanade Drive
Miami Springs, FL 33166

Dear Mr. Jackson:

In compliance with your request, this letter is to advise you of the City's requirements should the owner of the 100' x 150' lot located at 200 Esplanade Drive wish to subdivide the lot into two 75'x100' lots.

1. First, the owner of the subject property should submit a letter to this department requesting the City's approval to subdivide the lot into two 75' x 100' parcels. If the owner intends to apply for a building permit for the subdivided property, the letter should state this intention.

2. Along with the letter, there should be a copy of a current survey showing the location of all improvements on the property. The improvements should be restricted to a 75' x 100' portion of the overall platted lot of record and must not encroach upon the 75' x 100' portion for which the owner intends to apply for a building permit. Furthermore, the existing improvements must comply with all setback requirements. In this case, the house which is presently situated on the lot and facing 200 N. Esplanade Drive must:

a) Be located on a 75' x 100' lot.

b) Have minimum setbacks: front yard setback of 30'; rear yard setback of 25'; 15' setback on the side of the house facing Falcon Avenue, and a 10' setback on the south side of the house.

No building permit can be issued for the remaining 75' x 100' portion of the platted lot until all encroachments into the above described setback areas have been removed.

3. The owner should provide a survey showing the proposed locations of water, sewer, electric, telephone, gas and television cable. The ap-

Appellant's Desired Setback

- Setbacks required removal of accessory building to provide 25-foot rear yard setback.

- Dotted line shows 25-foot setback line.

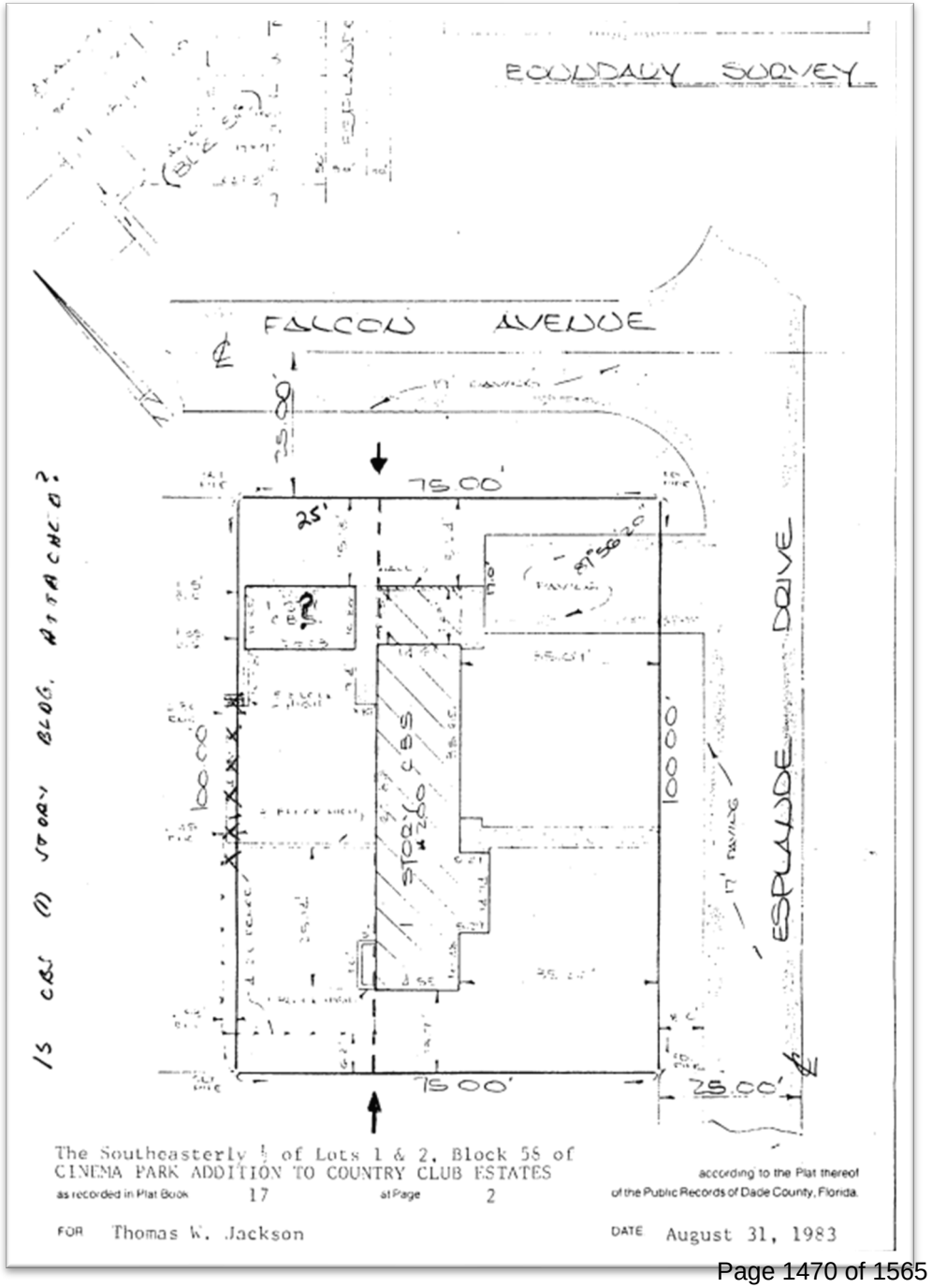

Alternative Setback Plan

- Front on Falcon Avenue
- Only side yard setback required toward 300 Falcon Avenue.
- Existing building only needs to be partially removed.

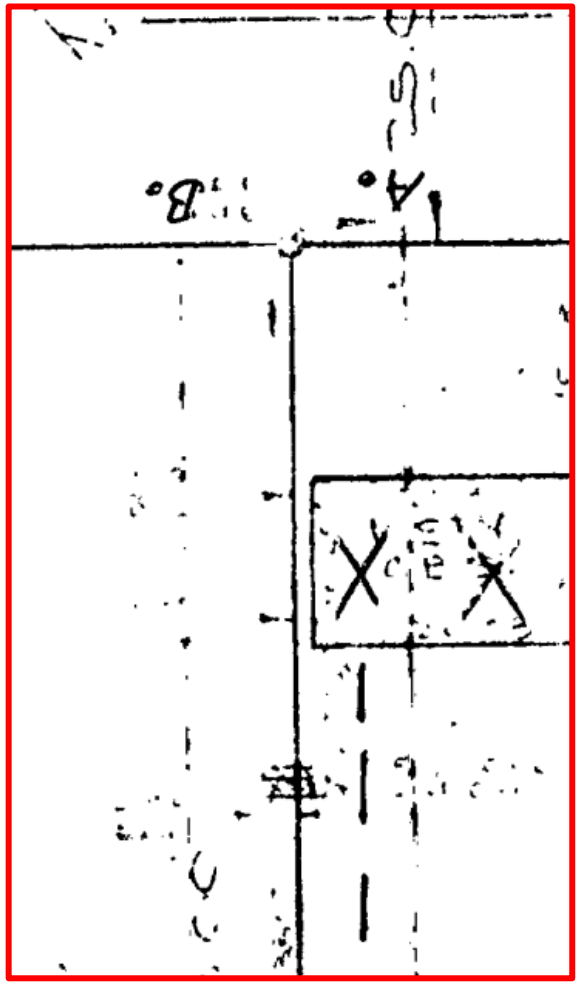

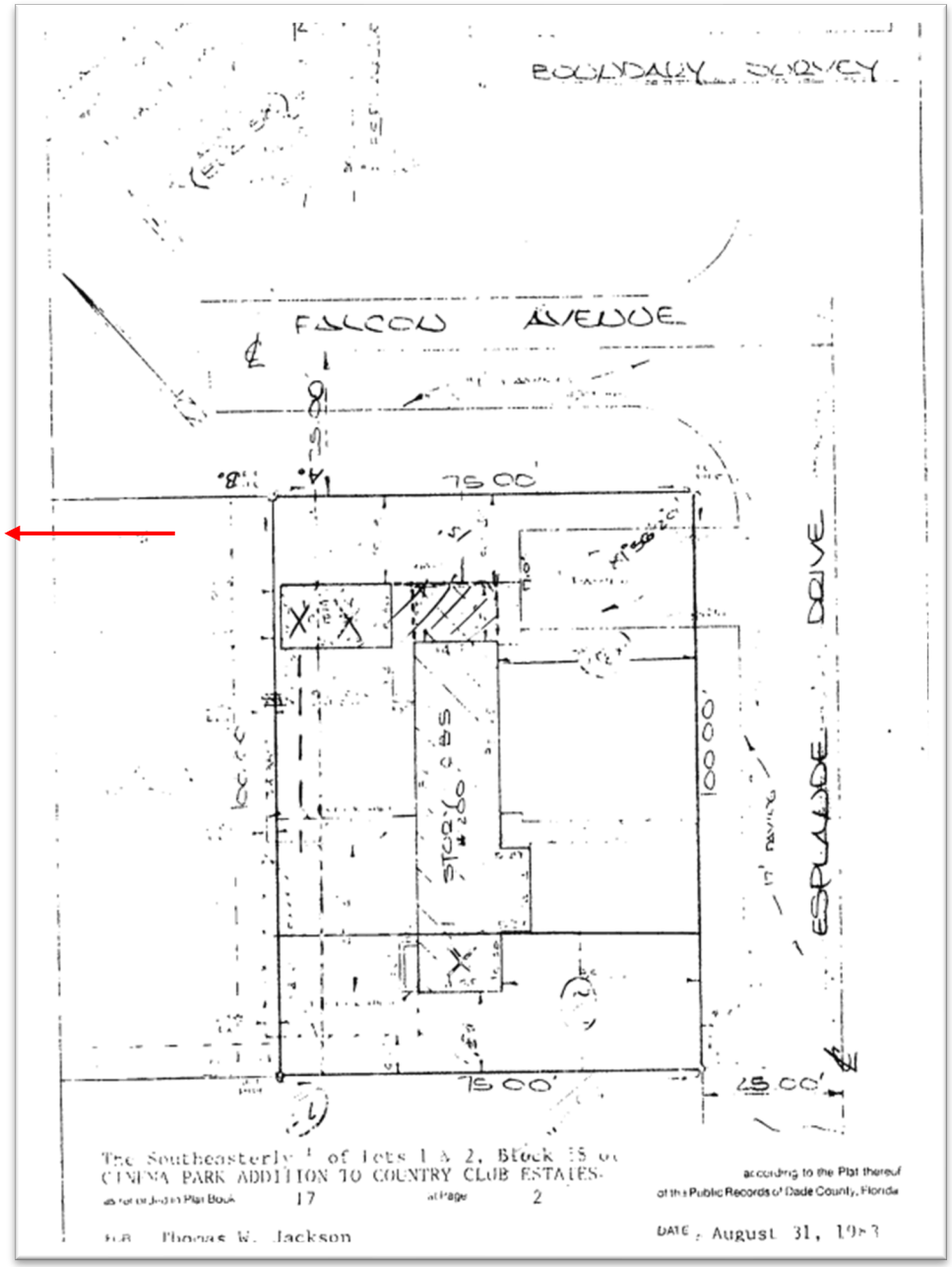

Side Yard Setback

- In the record, we found this key to the alternative setback plan.

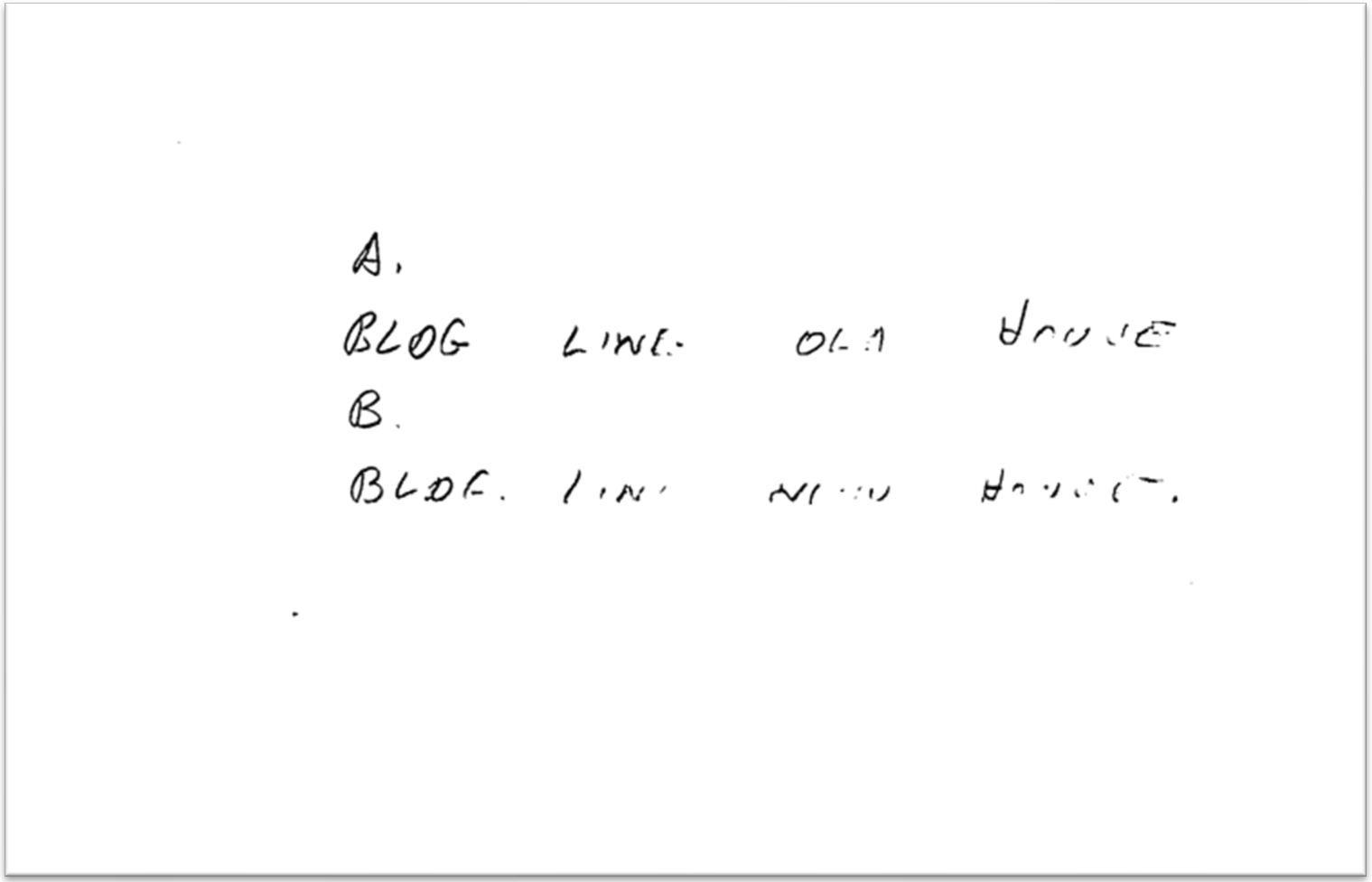

Accessory Building Setback

- The Accessory Building originally measured 10’ x 20’ and had setbacks of 1.15’-1.35 to the Appellant’s property.
- It would need to be completely removed to comply with the 25-foot rear yard setback.

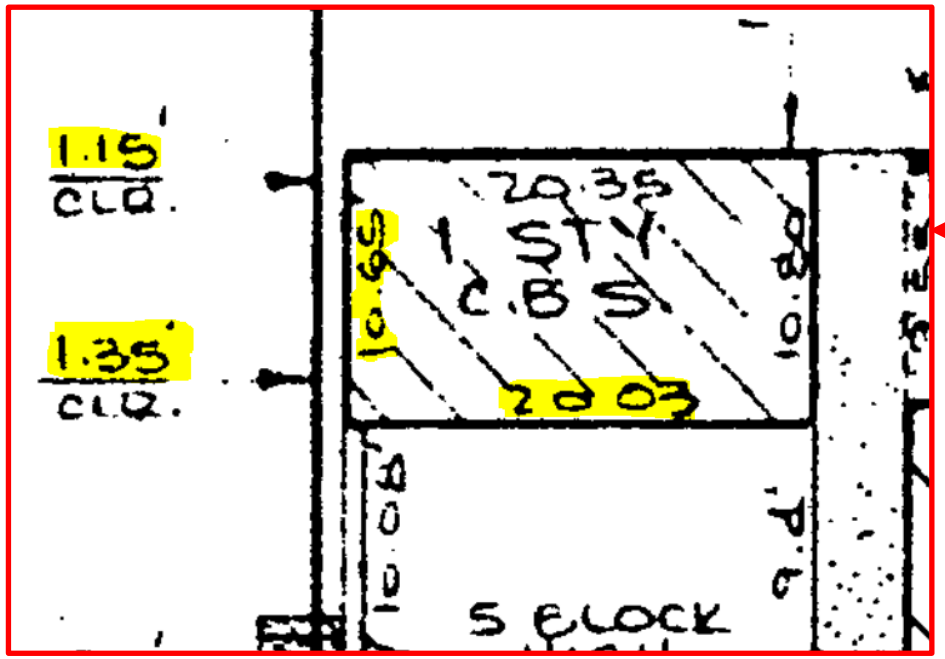

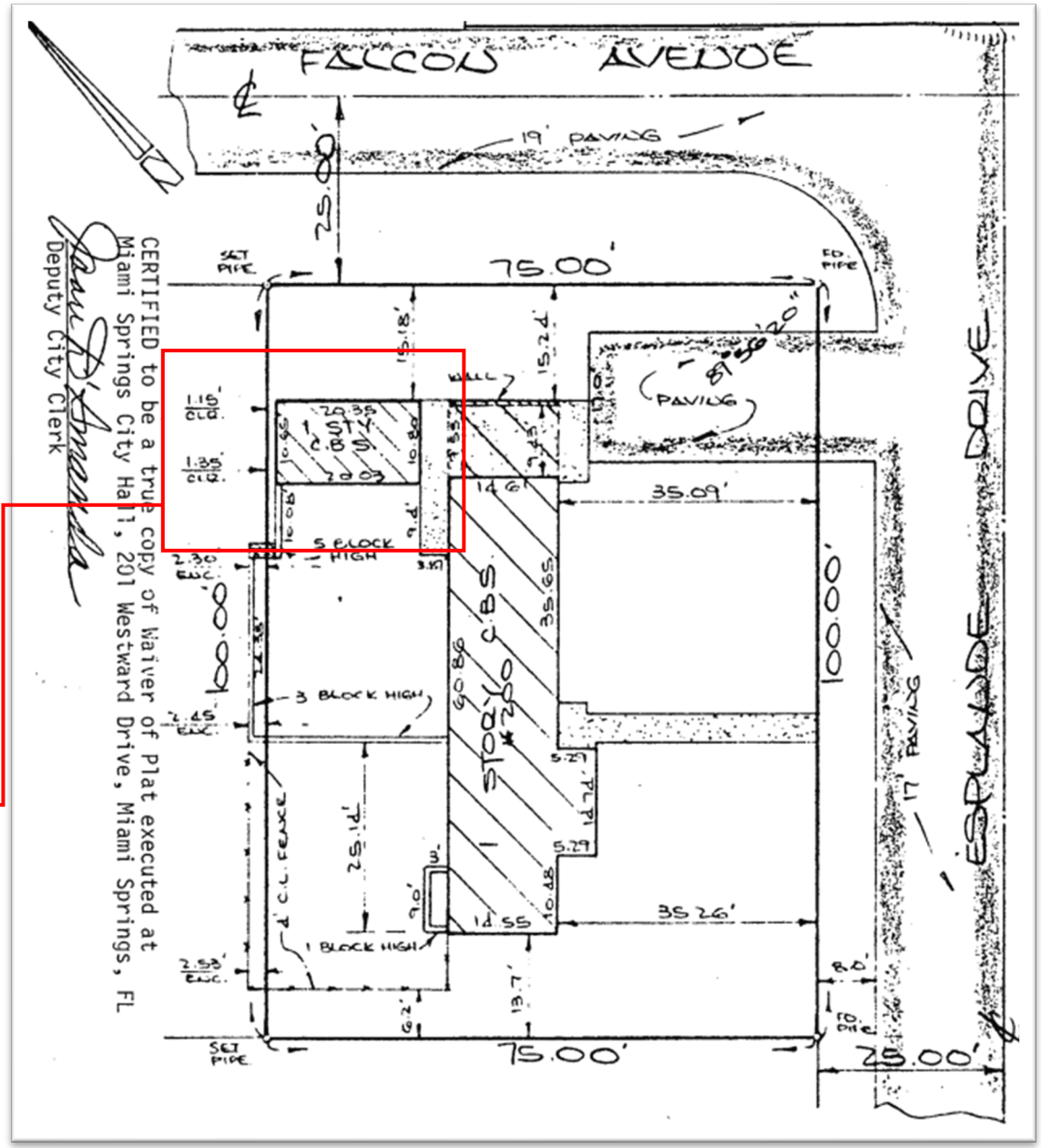

Partial Demolition Permit

- The Corner Property's owner obtained a permit for **Partial Demolition of Accessory Building** on September 7, 1984, to meet the required setbacks.
- This permit was reviewed and approved by David Wells, the Building Official who wrote the June 20, 1984 letter.

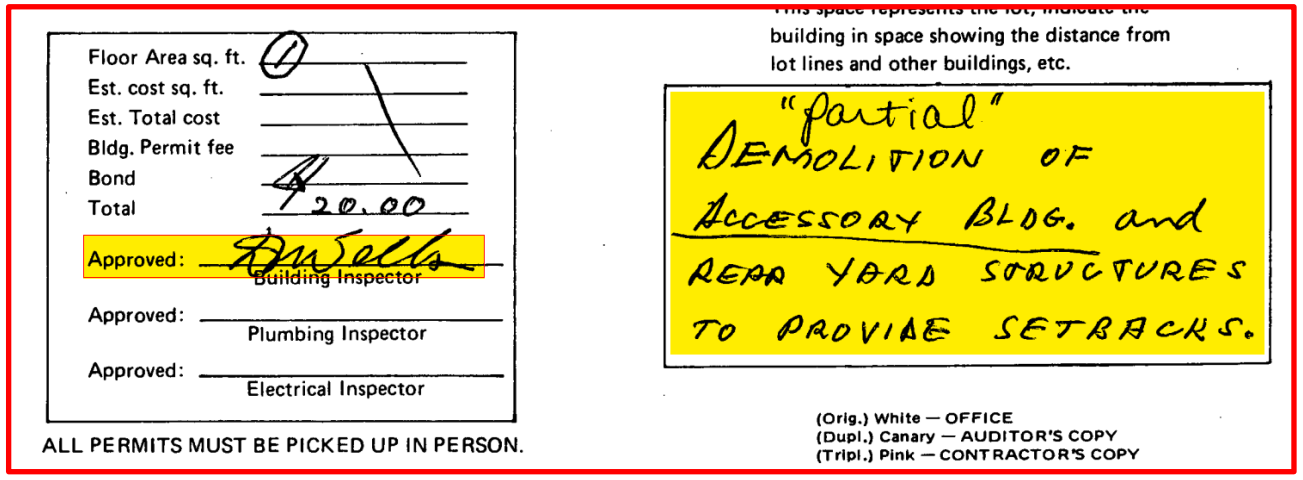

Floor Area sq. ft. 1
Est. cost sq. ft.
Est. Total cost
Bldg. Permit fee
Bond
Total 20.00

Approved: Building Inspector
Approved: Plumbing Inspector
Approved: Electrical Inspector

ALL PERMITS MUST BE PICKED UP IN PERSON.

building in space showing the distance from lot lines and other buildings, etc.

"partial" DEMOLITION OF ACCESSORY BLDG. and REAR YARD STRUCTURES TO PROVIDE SETBACKS.

(Orig.) White — OFFICE
(Dupl.) Canary — AUDITOR'S COPY
(Tripl.) Pink — CONTRACTOR'S COPY

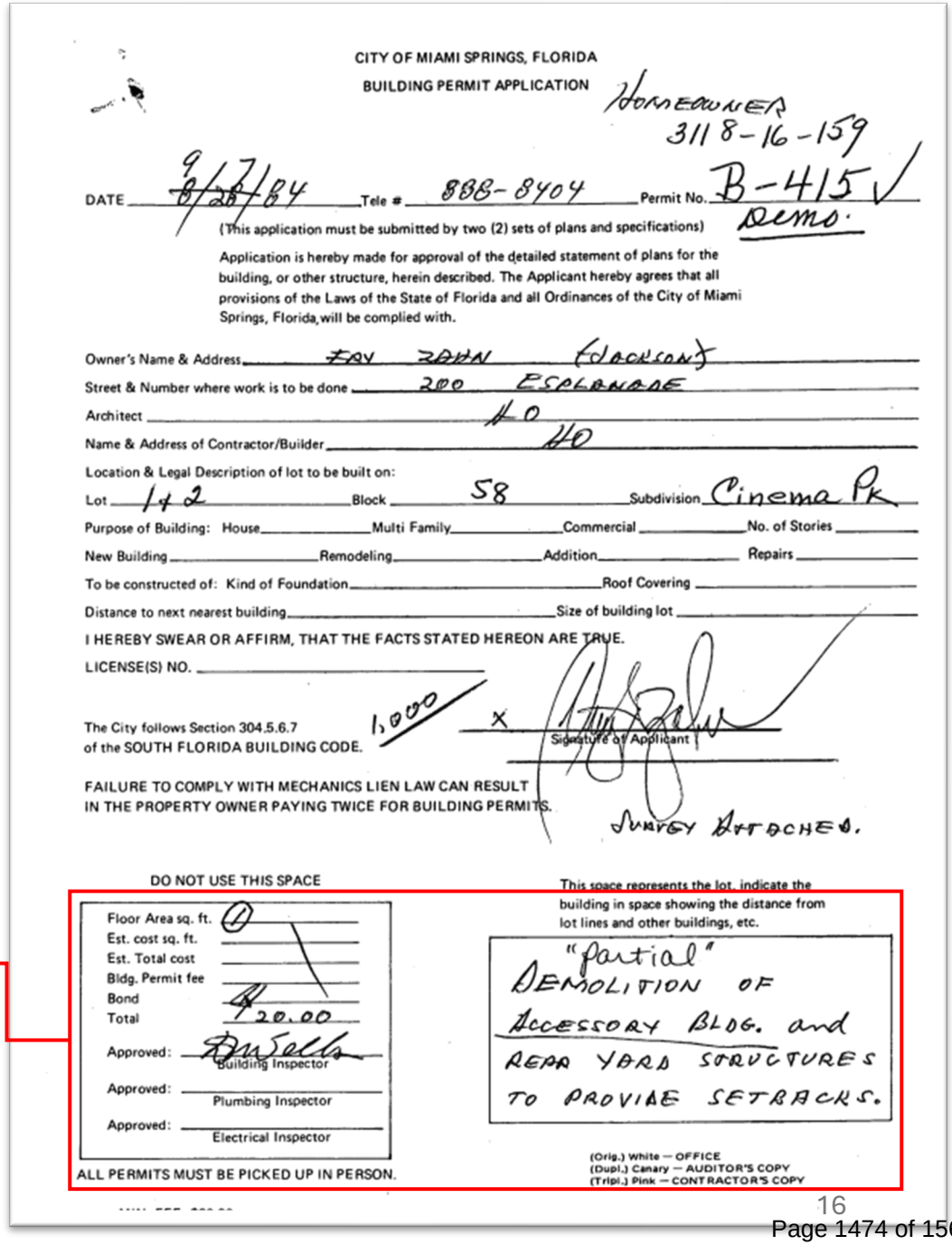

CITY OF MIAMI SPRINGS, FLORIDA
BUILDING PERMIT APPLICATION

Homeowner
3118-16-159

DATE 9/7/84 Tele # 888-8404 Permit No. B-415 Demo.

(This application must be submitted by two (2) sets of plans and specifications)

Application is hereby made for approval of the detailed statement of plans for the building, or other structure, herein described. The Applicant hereby agrees that all provisions of the Laws of the State of Florida and all Ordinances of the City of Miami Springs, Florida, will be complied with.

Owner's Name & Address FAY JOHN (JACKSON)
Street & Number where work is to be done 200 ESPLANADE
Architect NO
Name & Address of Contractor/Builder NO
Location & Legal Description of lot to be built on:
Lot 1 & 2 Block 58 Subdivision Cinema Pk
Purpose of Building: House Multi Family Commercial No. of Stories
New Building Remodeling Addition Repairs
To be constructed of: Kind of Foundation Roof Covering
Distance to next nearest building Size of building lot
I HEREBY SWEAR OR AFFIRM, THAT THE FACTS STATED HEREON ARE TRUE.
LICENSE(S) NO.

The City follows Section 304.5.6.7 of the SOUTH FLORIDA BUILDING CODE. 1,000 x Signature of Applicant

FAILURE TO COMPLY WITH MECHANICS LIEN LAW CAN RESULT IN THE PROPERTY OWNER PAYING TWICE FOR BUILDING PERMITS.

SURVEY ATTACHED.

DO NOT USE THIS SPACE

Floor Area sq. ft. 1
Est. cost sq. ft.
Est. Total cost
Bldg. Permit fee
Bond
Total 20.00

Approved: Building Inspector
Approved: Plumbing Inspector
Approved: Electrical Inspector

ALL PERMITS MUST BE PICKED UP IN PERSON.

This space represents the lot, indicate the building in space showing the distance from lot lines and other buildings, etc.

"partial" DEMOLITION OF ACCESSORY BLDG. and REAR YARD STRUCTURES TO PROVIDE SETBACKS.

(Orig.) White — OFFICE
(Dupl.) Canary — AUDITOR'S COPY
(Tripl.) Pink — CONTRACTOR'S COPY

Setback after Partial Demolition

- Demolition followed sketch showing a side yard setback
- Approx. 5 and a half feet of the Accessory Building removed.
- **Rear yard setback was NOT provided.**

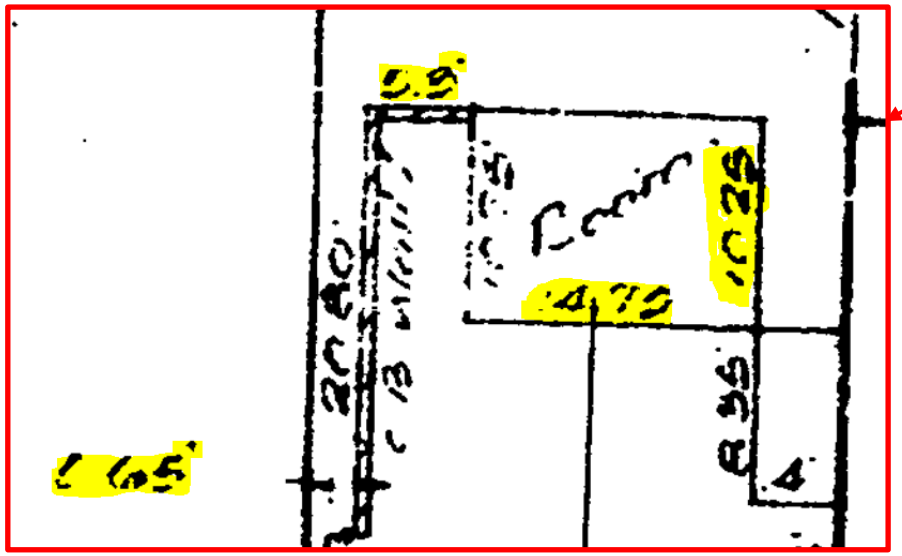

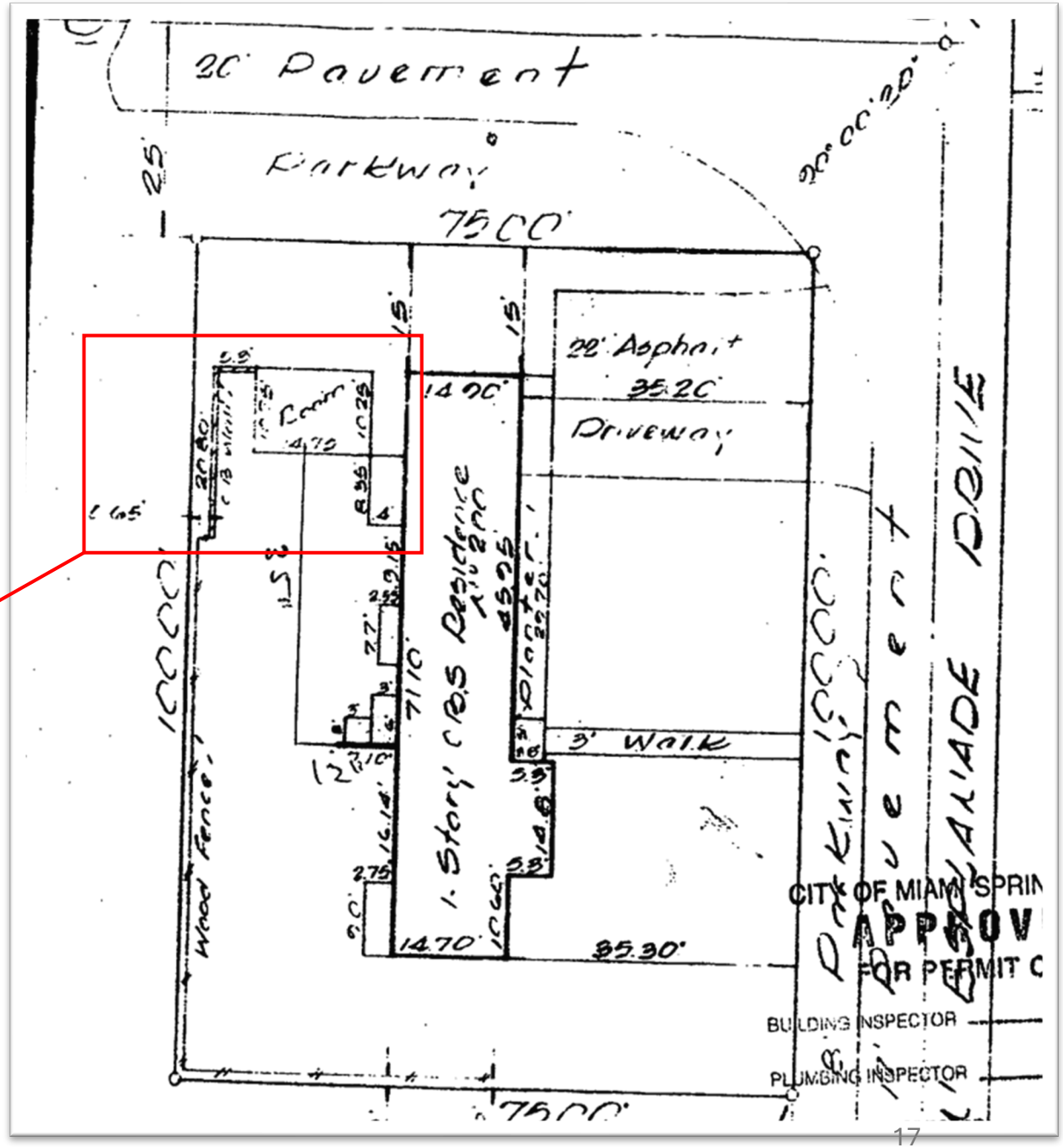

City Confirms Requirements Met

- November 27, 1984
- Mr. Wells confirms all zoning requirements are met and a new building permit for Appellant's property may be issued.

All requirements for the Building & Zoning Department zoning and regulations have been met. Thanks for your patience and persistence in following these details.

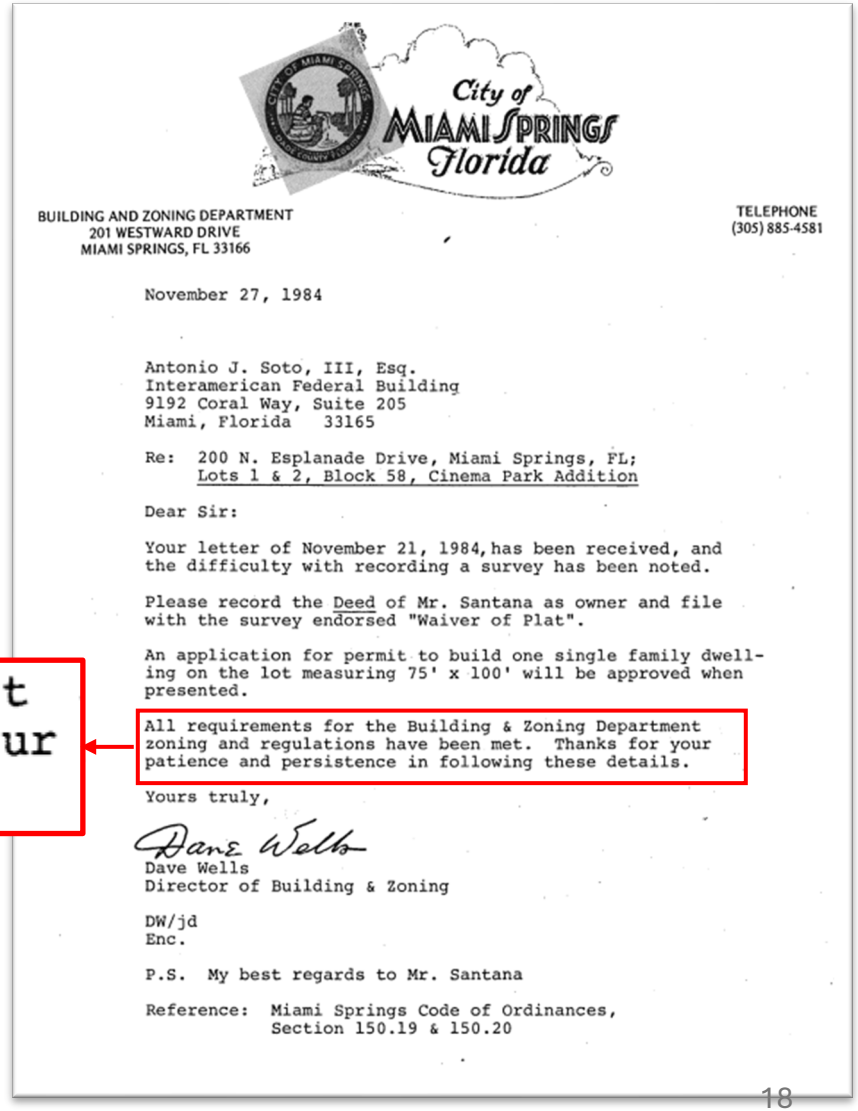

City of MIAMI SPRINGS Florida

BUILDING AND ZONING DEPARTMENT
201 WESTWARD DRIVE
MIAMI SPRINGS, FL 33166

TELEPHONE
(305) 885-4581

November 27, 1984

Antonio J. Soto, III, Esq.
Interamerican Federal Building
9192 Coral Way, Suite 205
Miami, Florida 33165

Re: 200 N. Esplanade Drive, Miami Springs, FL;
Lots 1 & 2, Block 58, Cinema Park Addition

Dear Sir:

Your letter of November 21, 1984, has been received, and the difficulty with recording a survey has been noted.

Please record the Deed of Mr. Santana as owner and file with the survey endorsed "Waiver of Plat".

An application for permit to build one single family dwelling on the lot measuring 75' x 100' will be approved when presented.

All requirements for the Building & Zoning Department zoning and regulations have been met. Thanks for your patience and persistence in following these details.

Yours truly,

Dave Wells
Director of Building & Zoning

DW/jd
Enc.

P.S. My best regards to Mr. Santana

Reference: Miami Springs Code of Ordinances,
Section 150.19 & 150.20

Appellant's Property's Building Permit

- Appellant's Property is issued building permit B-85-85 on January 8, 1985.
- **<u>Approved by David Wells</u>**

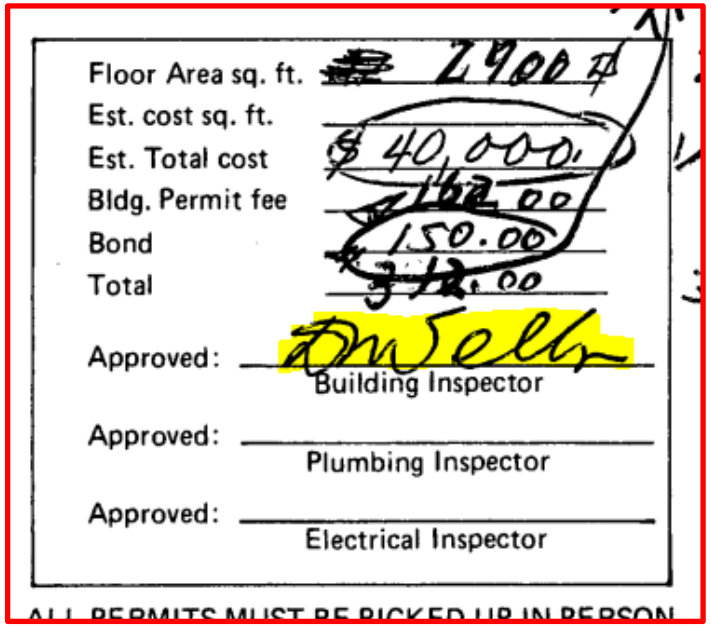

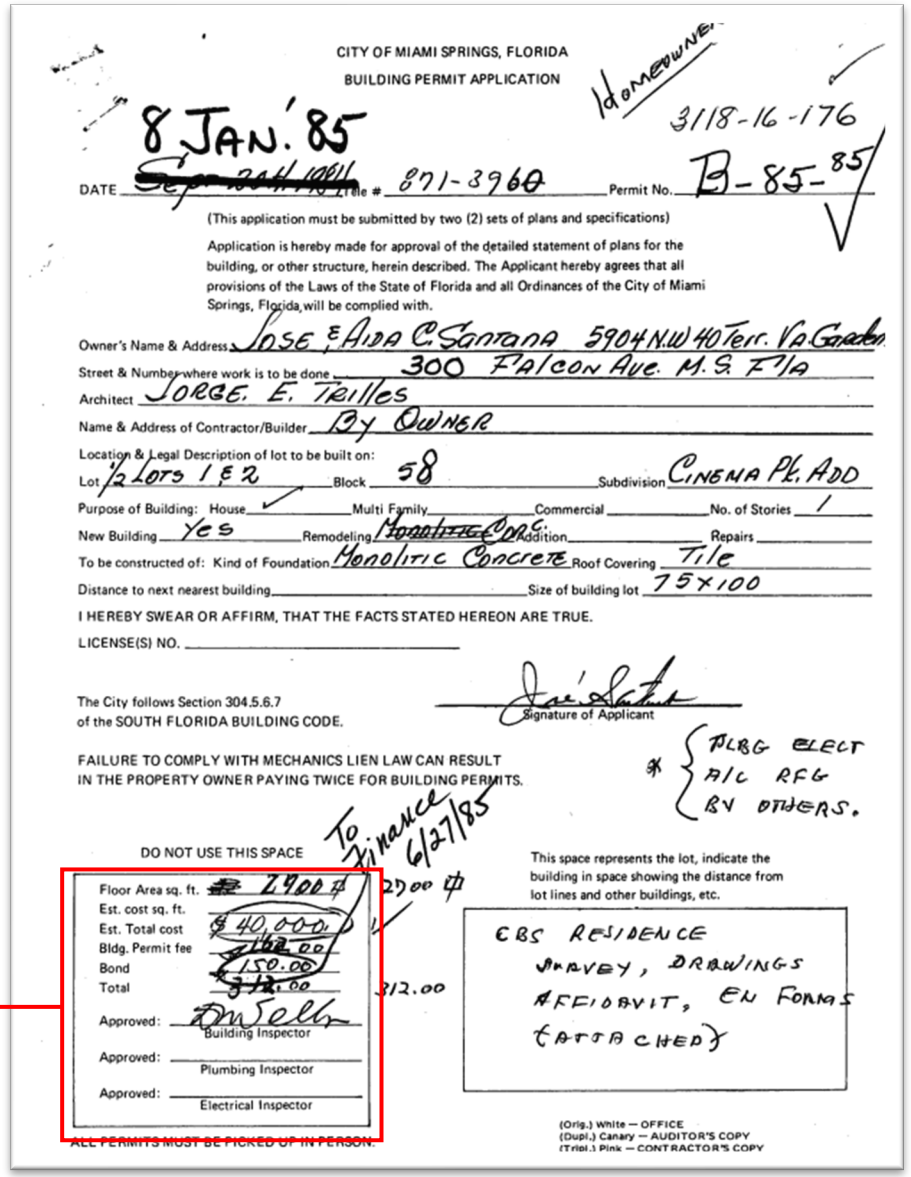

February, 1985

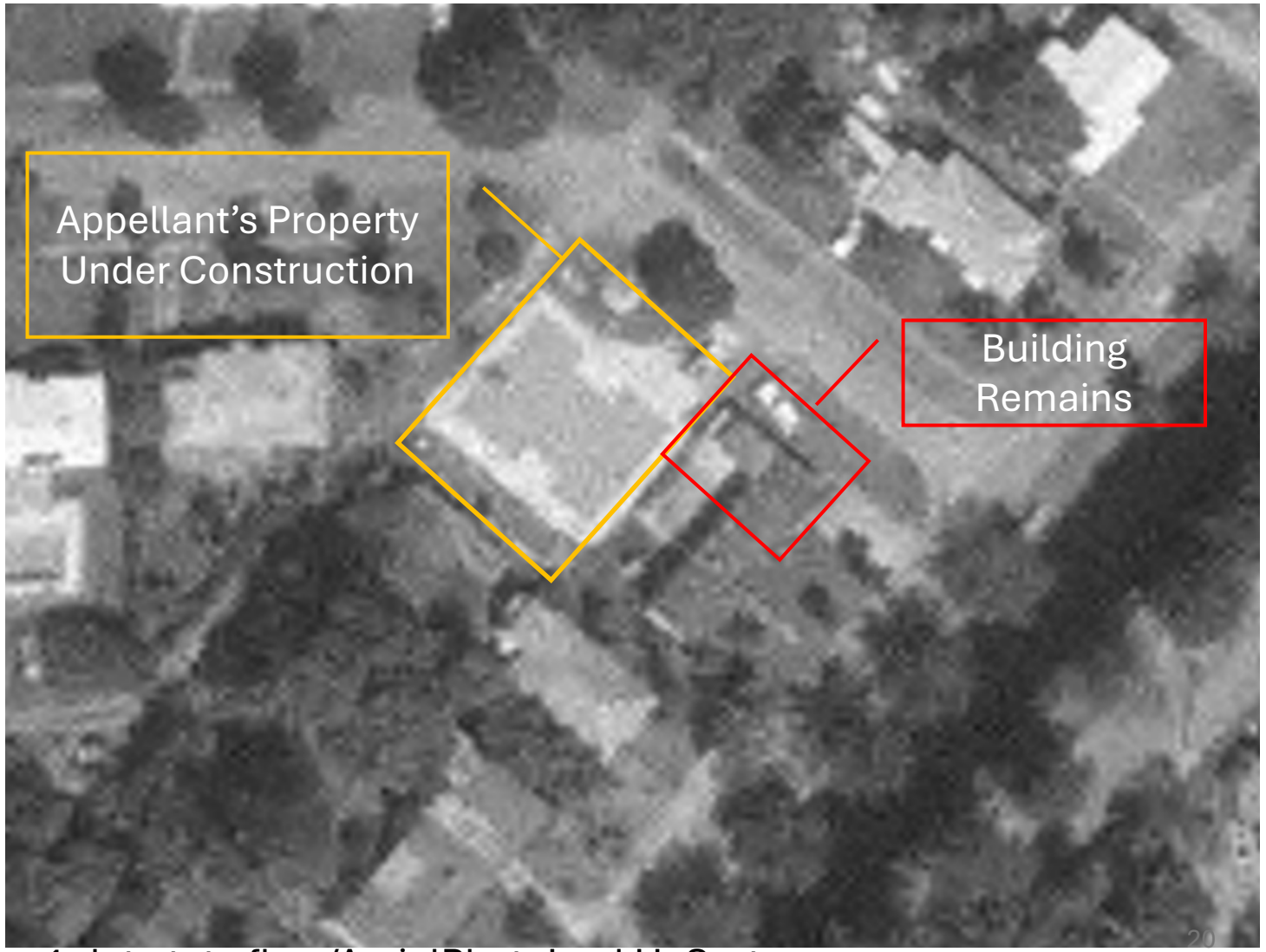

Source: FDOT Aerial Archives - https://fdotewp1.dot.state.fl.us/AerialPhotoLookUpSystem

March, 1991

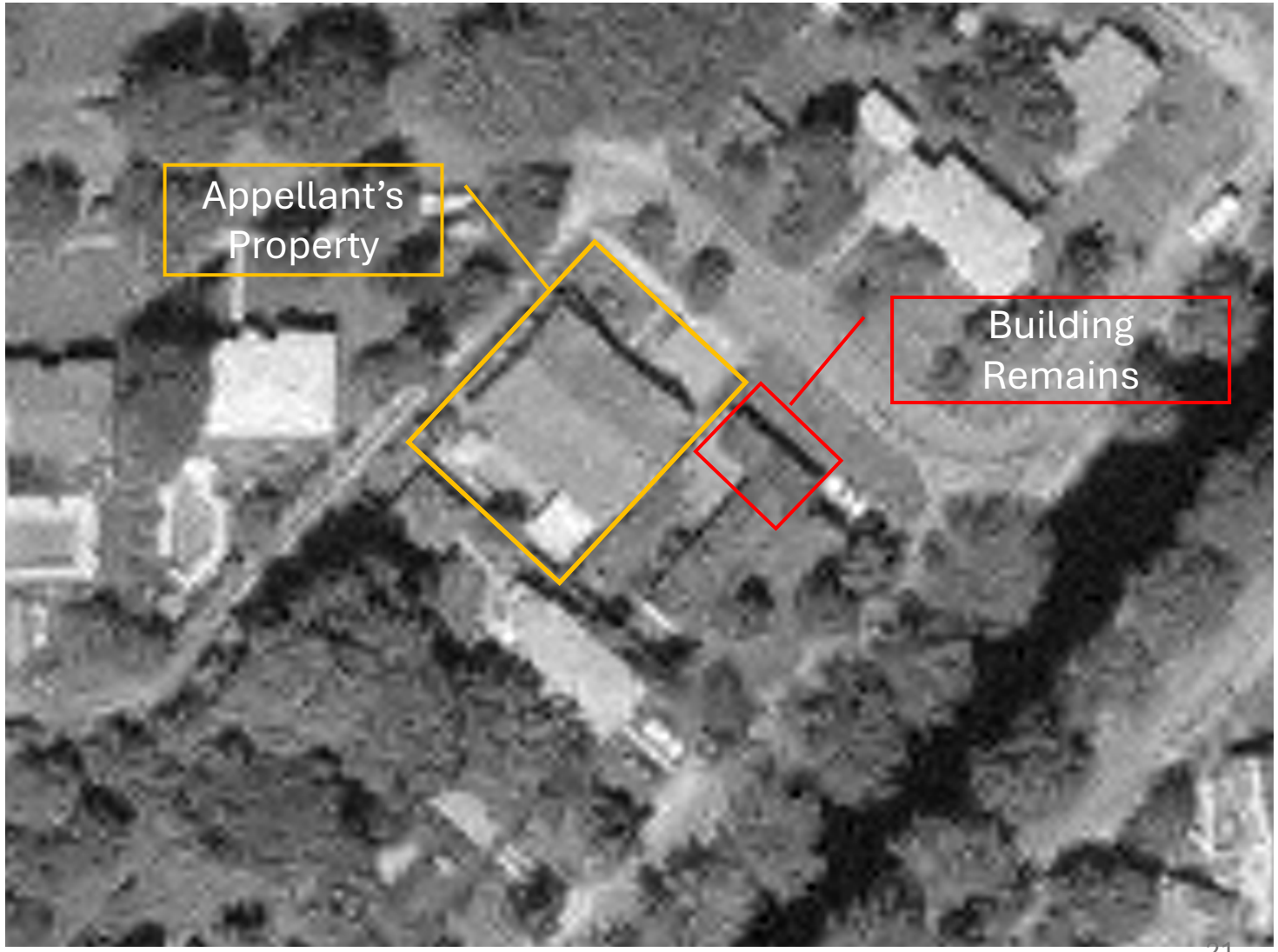

Source: FDOT Aerial Archives - https://fdotewp1.dot.state.fl.us/AerialPhotoLookUpSystem

February, 1998



Source: FDOT Aerial Archives - https://fdotewp1.dot.state.fl.us/AerialPhotoLookUpSystem

2004 Addition to 200 N. Esplanade Dr.

- On April 20, 2004, the owner of the 200 N Esplanade Drive was issued a building permit for an addition to the existing house under Permit 04-00000686.

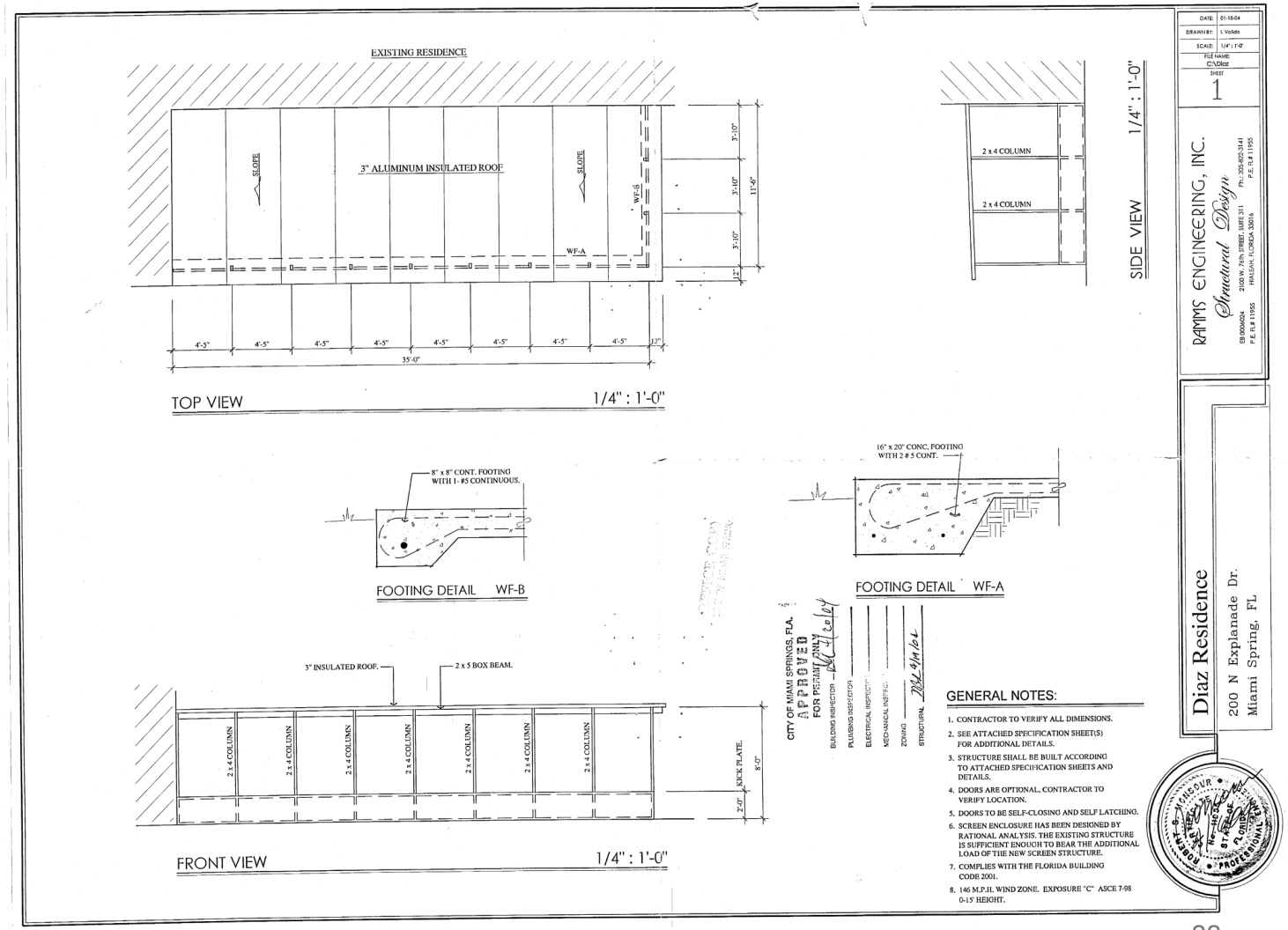

2004 Addition to 200 N. Esplanade Dr.

- The addition is attached to and projects 11’ 6” from the side of the house toward Appellant’s Property.

- Setback from addition to Appellants Property is approximately **13.5 feet**.

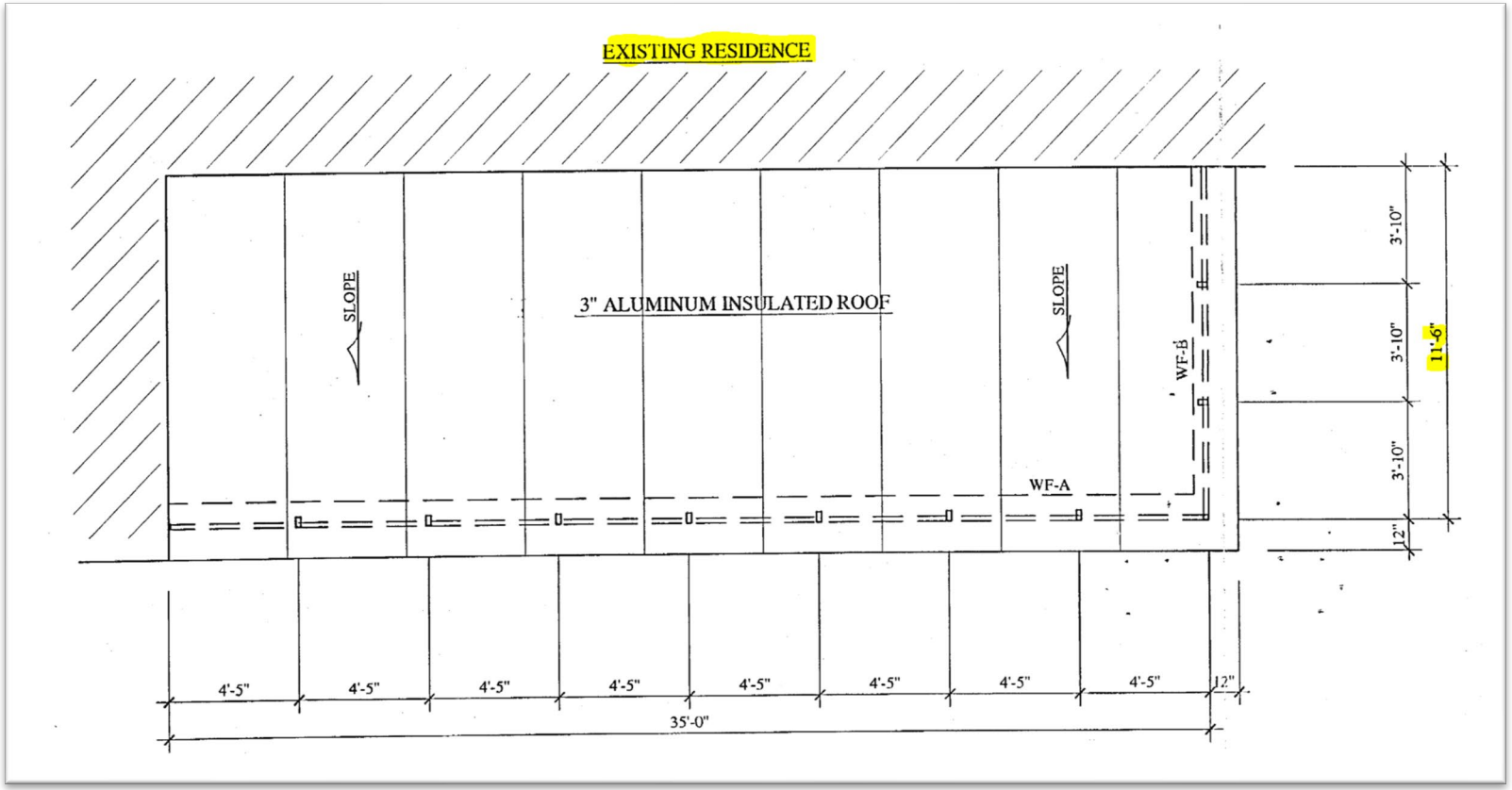

2004 Addition to 200 N. Esplanade Dr.

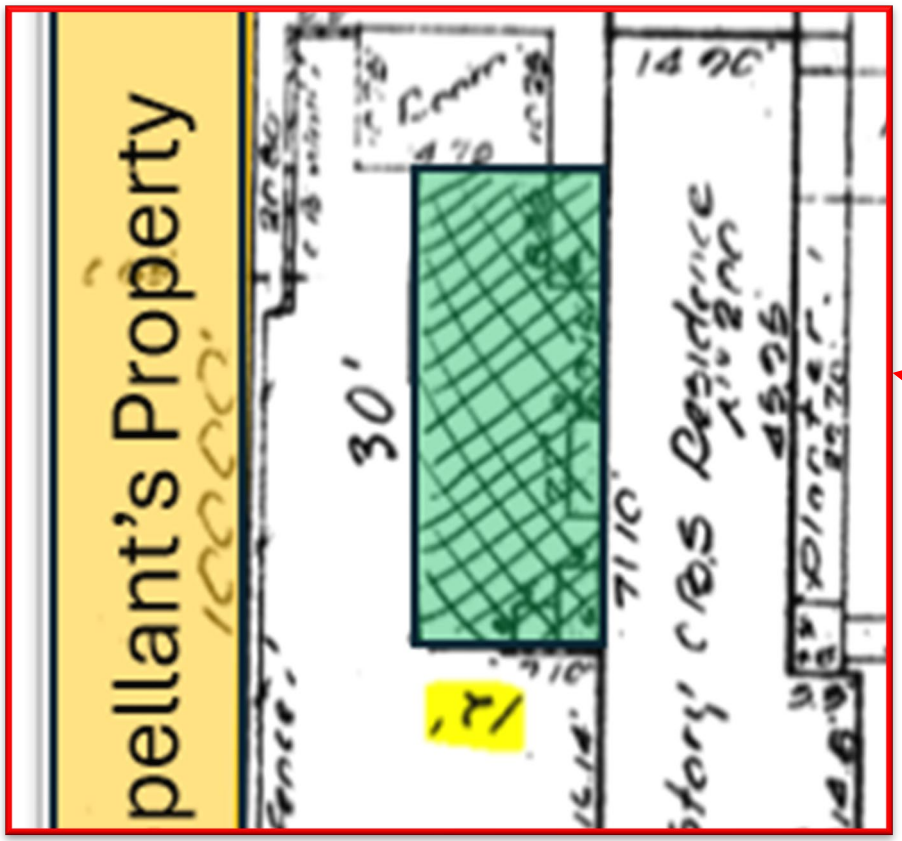

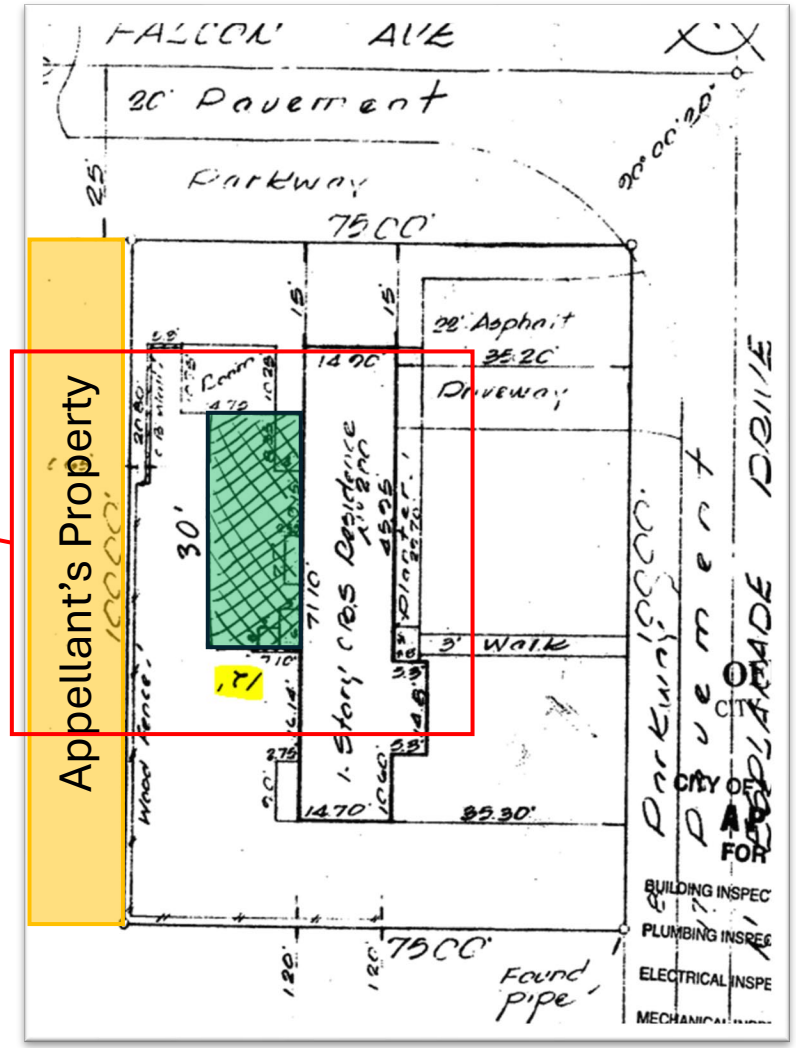

2003

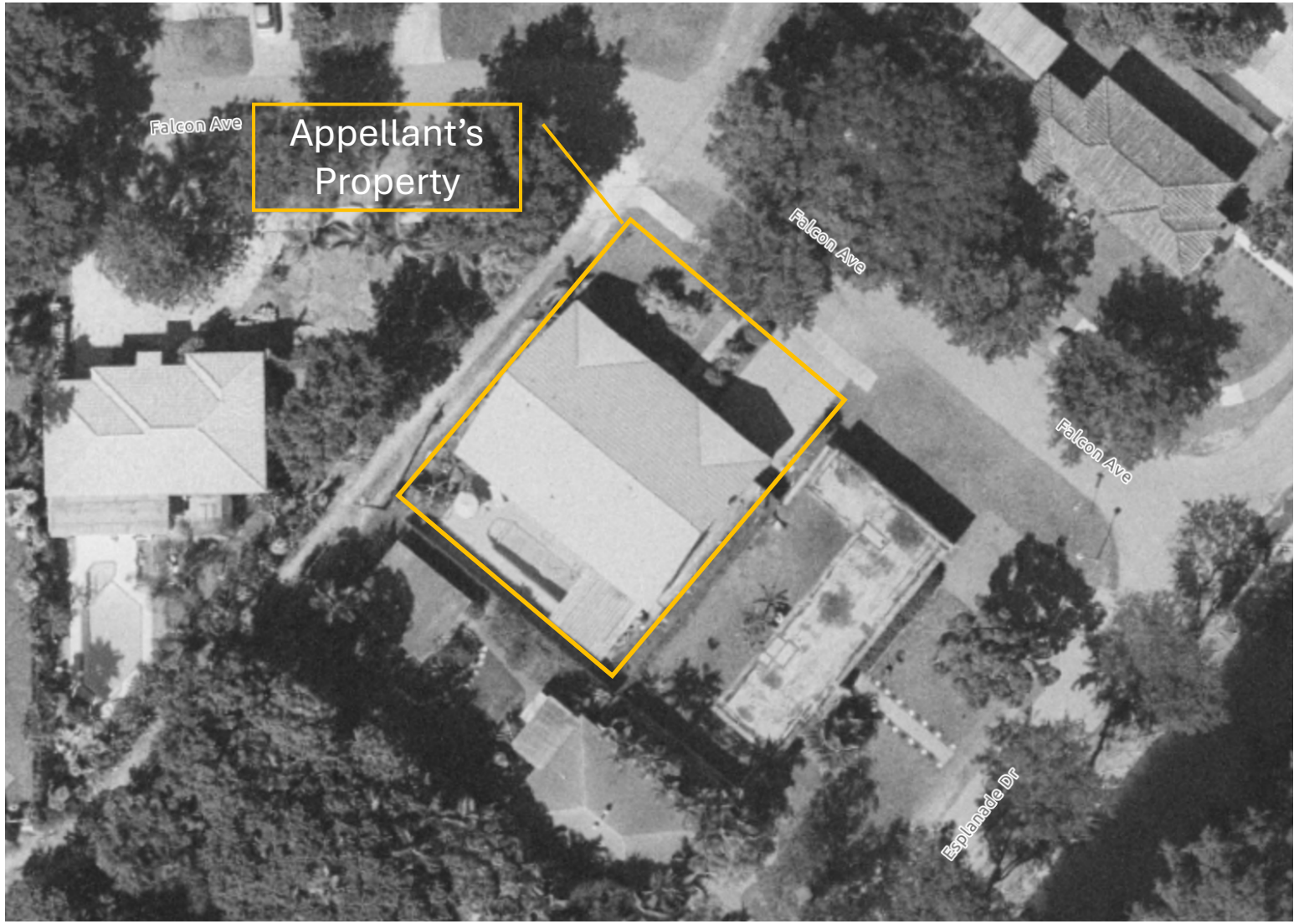

Source: Miami-Dade County – Aerial Photography Viewer
https://www.arcgis.com/apps/MapSeries/index.html?appid=e523627bb1a748408f7f61aae1bbbfd0

2005

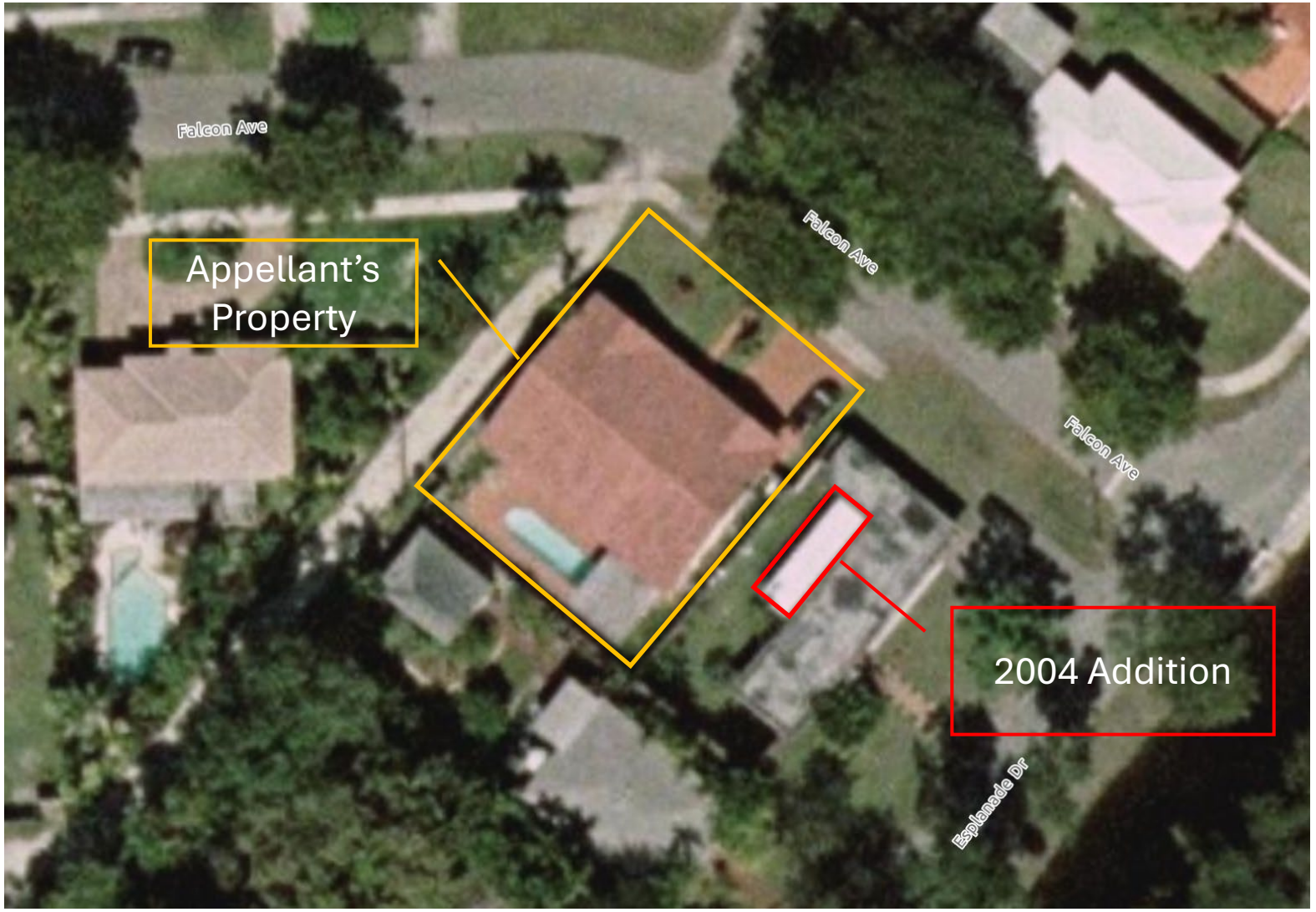

Source: Miami-Dade County – Aerial Photography Viewer
https://www.arcgis.com/apps/MapSeries/index.html?appid=e523627bb1a748408f7f61aae1bbbfd0

City Treated this as a **Side Yard**

- Approximately 13.5 feet is provided as a setback from 2004 Addition to Appellant's property.
- In its review of the 2004 Addition, the City treated this area as a side yard, where a minimum of 7.5 feet (10% of the lot width) is required, and 13.5 is provided.
- This cannot be a rear yard because 25 feet would be required.

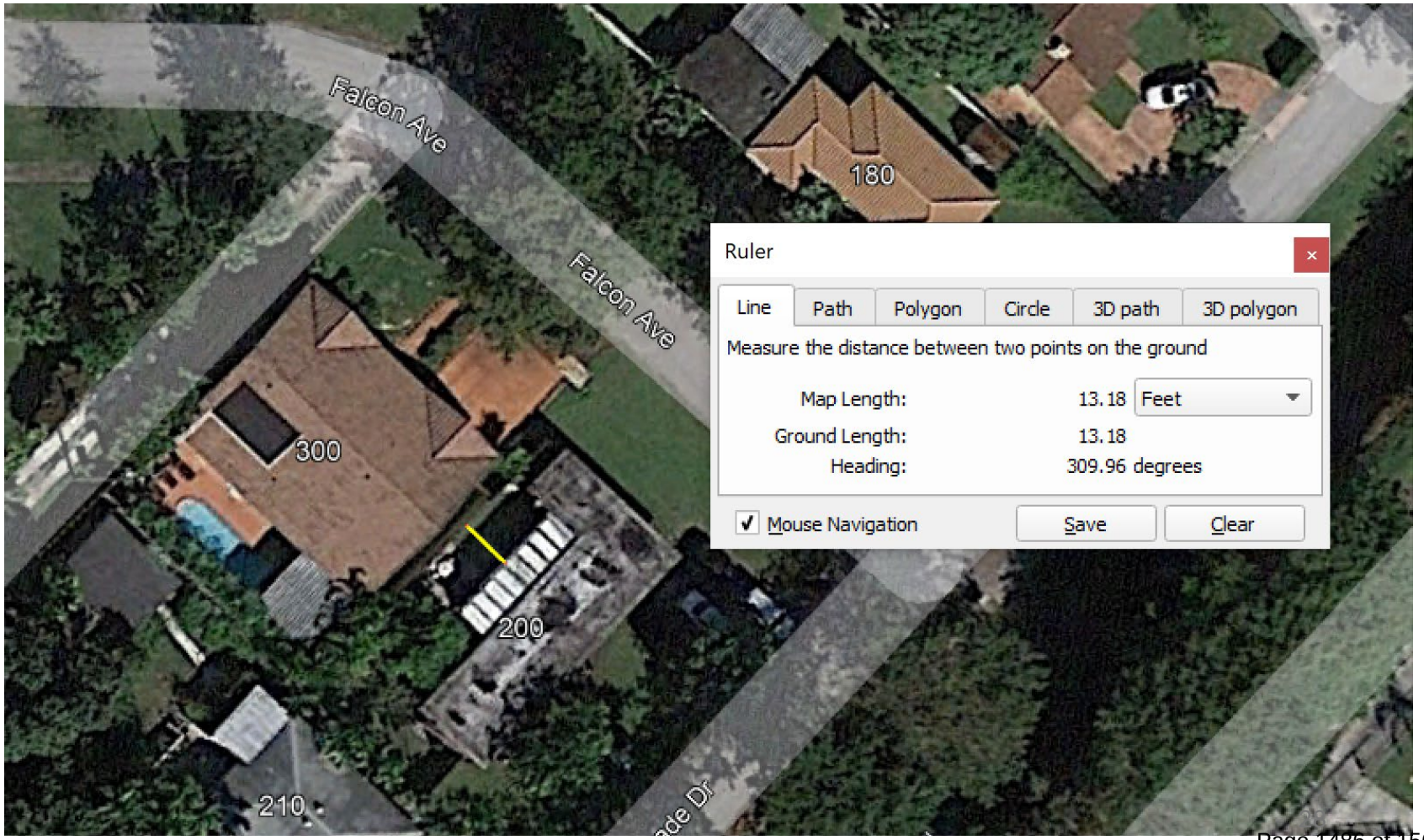

Source: Google Earth

2004 Addition

- This is an angled view of the 2004 Addition as it was originally permitted.
- House in foreground is the Appellant's property.



Source: Miami-Dade Property Appraiser website

2004 Addition Remained Until Current Addition

- 2021 Aerial Photograph



Source: Miami-Dade County – Aerial Photography Viewer
https://www.arcgis.com/apps/MapSeries/index.html?appid=e523627bb1a748408f7f61aae1bbbfd0

Current Addition to 200 N. Esplanade Dr.

- Permit RES21-1143 was issued on May 18, 2022.
  - New addition is in the same general location as the 2004 Addition.

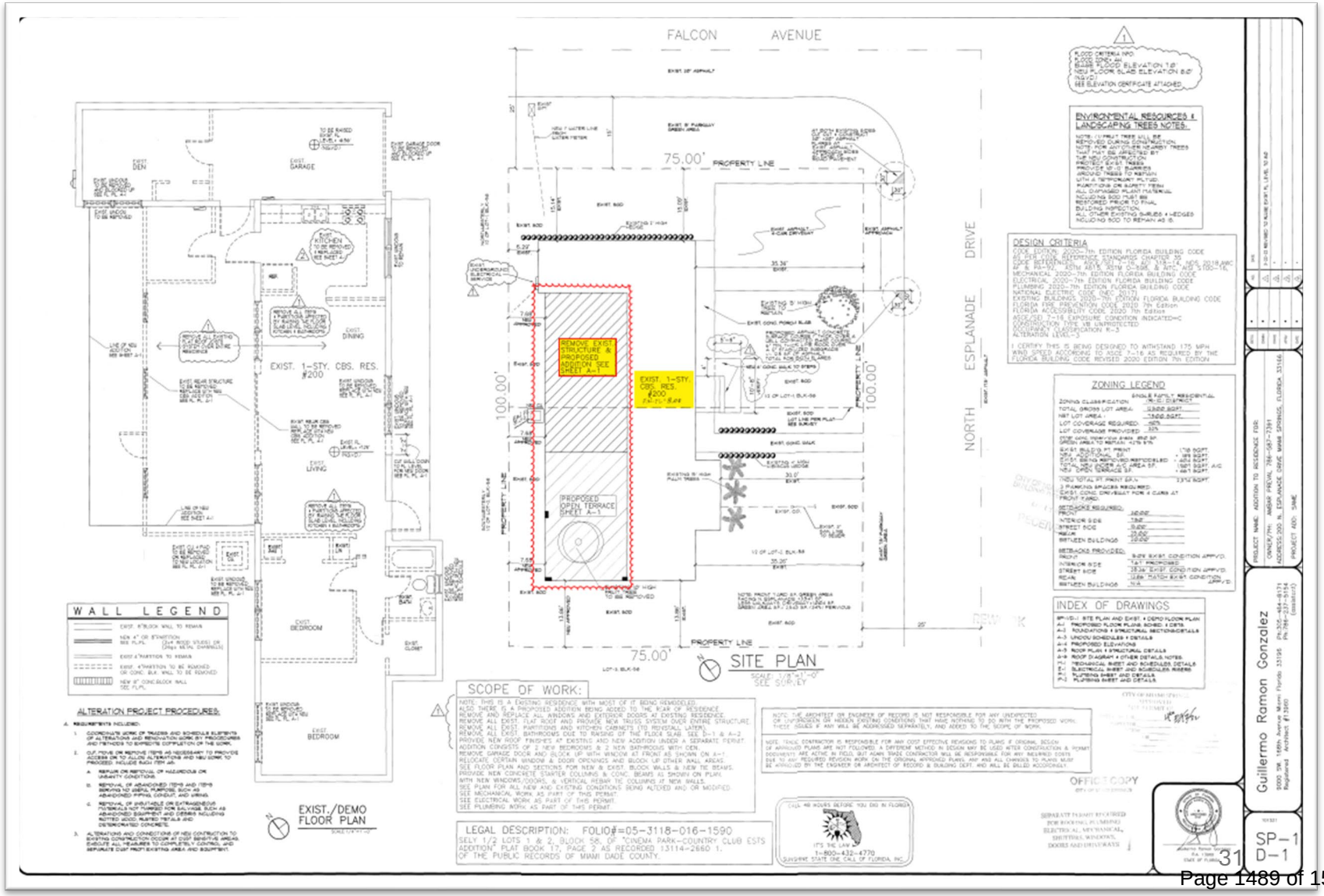

Current Addition to 200 N. Esplanade Dr.

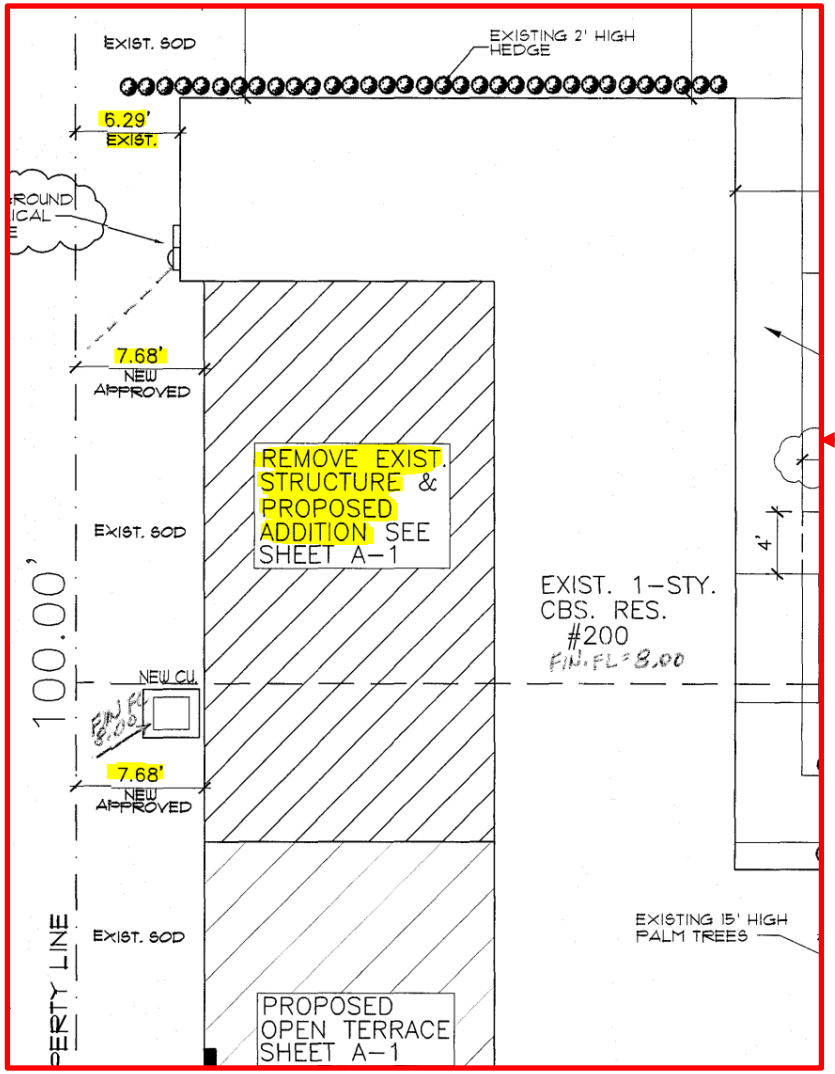

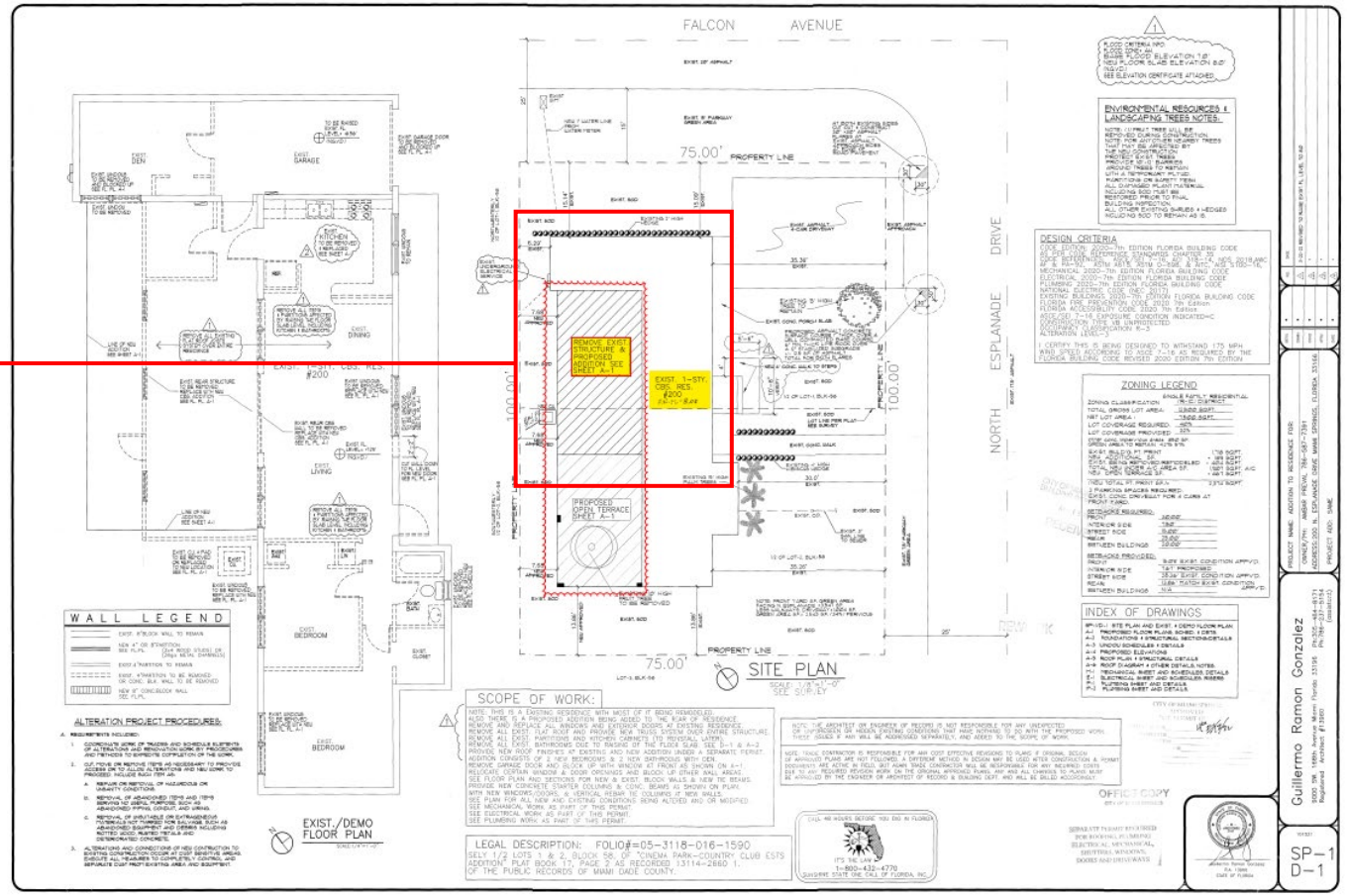

Current Addition to 200 N. Esplanade Dr.

- Meets minimum setback required for side yard (7.5’) abutting Appellant’s property.
- Consistent with City’s application of setbacks for the 2004 Addition.

SETBACKS REQUIRED:	
FRONT	30.00'
INTERIOR SIDE	7.50'
STREET SIDE	15.00'
REAR	25.00'
BETWEEN BUILDINGS	20.00'
SETBACKS PROVIDED:	
FRONT	15.09' EXIST. CONDITION APPV'D.
INTERIOR SIDE	7.67' PROPOSED
STREET SIDE	35.36' EXIST. CONDITION APPV'D.
REAR	13.86' MATCH EXIST. CONDITION APPV'D.
BETWEEN BUILDINGS	N/A

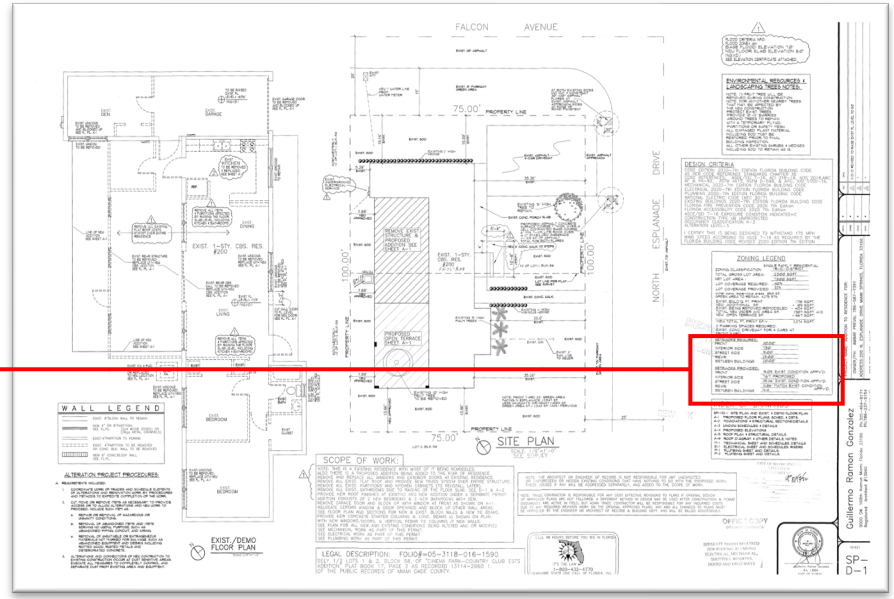

Section 150-002(C)(18)(e) Does NOT Affect the Front Yard Location!

Appellant's Position:

Section 150-002(C)(18)(e) *Front*. The front of a lot shall be construed to be the portion nearest the street. For corner lots, the lot front shall be the narrowest portion abutting the street, unless determined otherwise by the planning and zoning director.

No reference to "front yard".

Staff's Position:

Section 150-002(C)(85)*Yard, front*. A yard extending across the front of a lot and being the minimum horizontal distance between the front lot line and the nearest part of the main building. On corner lots, the front yard **shall** be considered as adjacent to the street upon which the lot has its least dimension.

Expressly applies to "front yard".
No discretion provided to relocate the front yard on corner lots.

Appellant's Proposed Setbacks

- Under Appellant's proposed configuration, the Corner Property is disproportionately hindered.
  - The house would be permitted to expand **5 feet** in some of its façade toward Esplanade Dr., and **3 feet** to the south.
  - The house is already at the 15' side street setback to Falcon Avenue. – NO EXPANSION
  - The house, except Accessory Building is already at the 25' rear setback to Appellant's Property. – NO EXPANSION

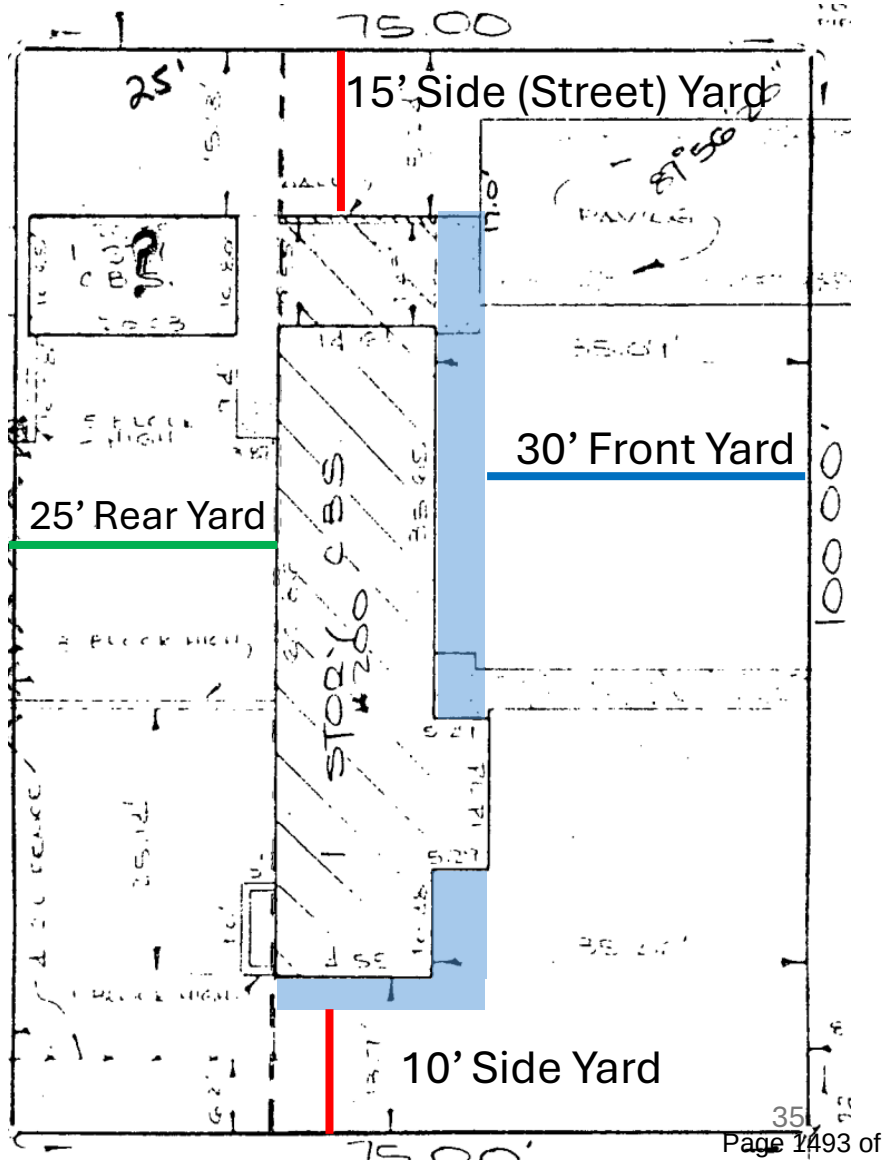

Timing of the Appeal

- The Appellant resides next door to the subject property.
- The subject property has been under construction since 2022.
- The Appellant did not file this appeal until November, 2024.

Timing of the Appeal

- This is the state of construction at the property in January 2023.
- The trusses are in place and the footprint of the addition is easy to determine at this point.
- This is nearly 2 years before the Appellant filed this appeal.

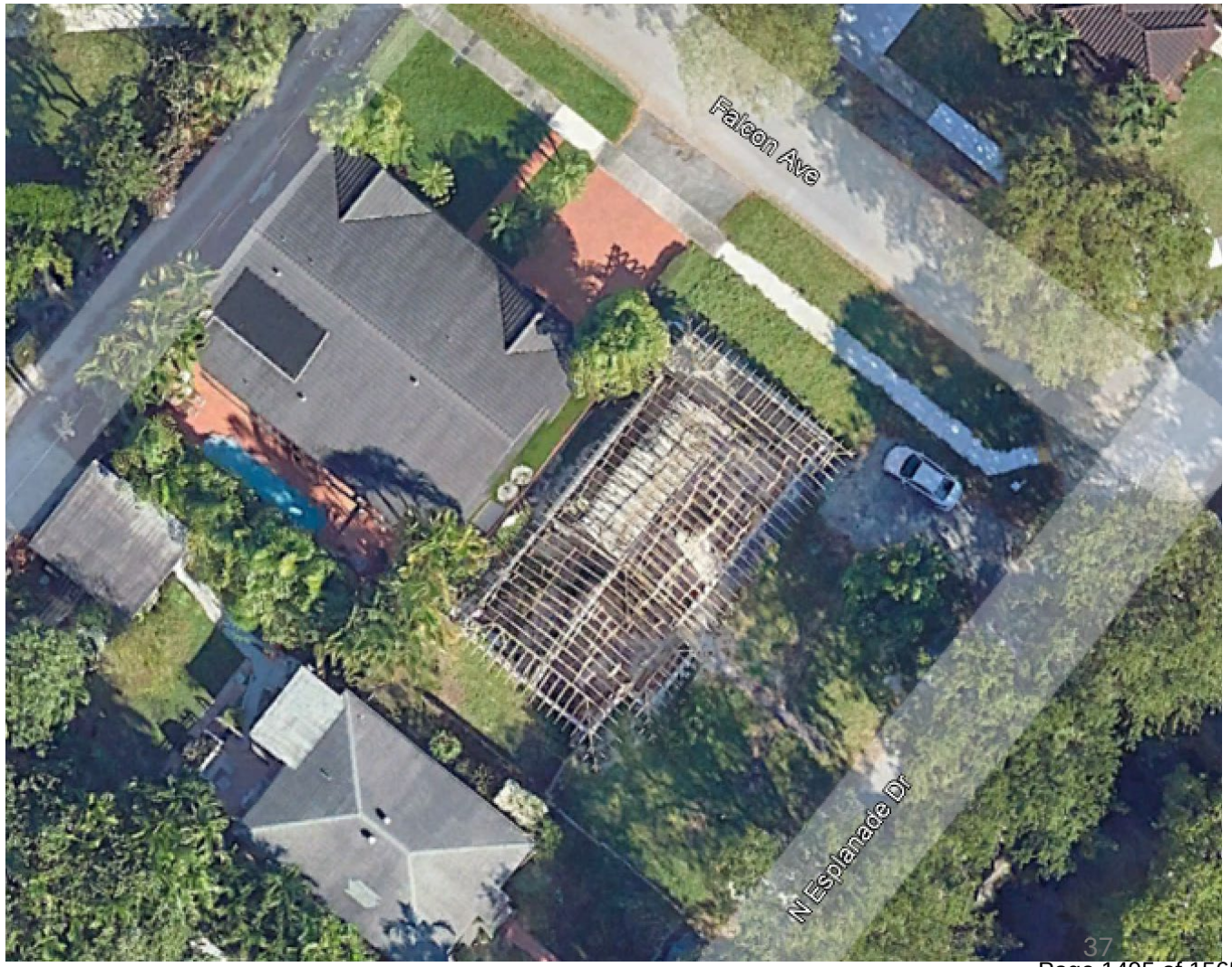

Source: Google Earth

Timing of the Appeal

- This is the state of construction at the property in March 2024.
- The Owner of the Corner Property has continued construction and roof is in place.
- This appeal is filed nearly 9 months after this photograph.



Source: Google Earth

Other Similarly Situated Waiver Of Plat Properties

- Staff has identified other properties in Miami Springs which are like the Appellant and Corner Property because they have been divided into an interior and corner lot by a Waiver of Plat.
- These resulting corner lots have their front yards abutting the narrower dimension street as required by Section 150-002(C)(85).
- The corner lots have an abutting side yard to the companion interior lot.

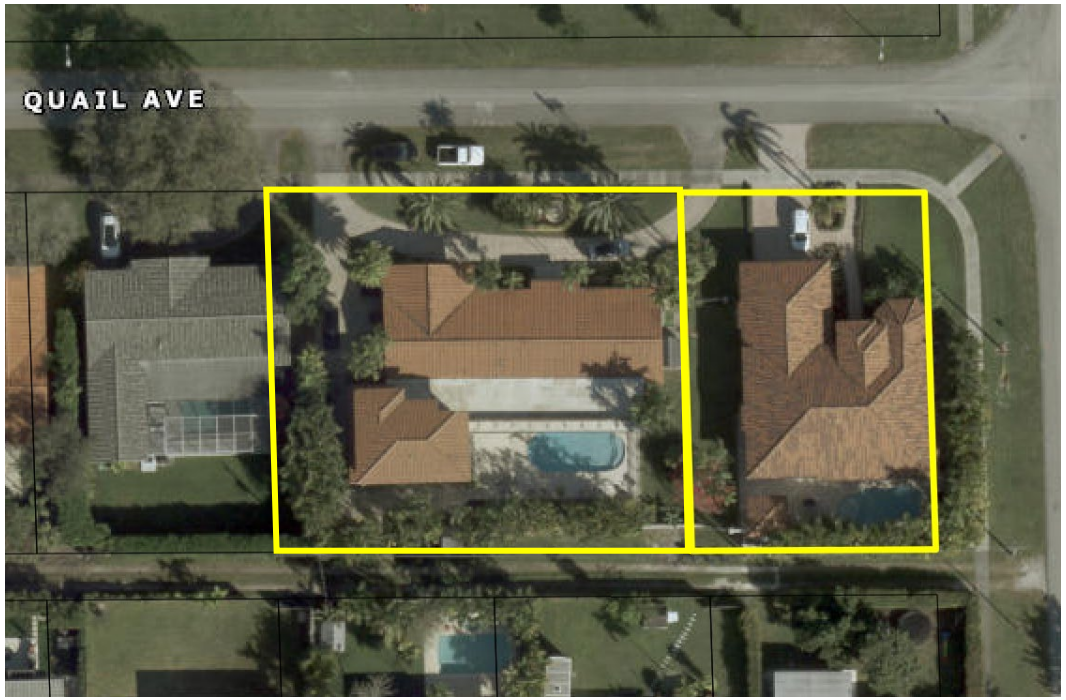

Other Similarly Situated Waiver Of Plat Properties

- 900 (Corner) & 910 (Interior) Quail Ave.
- Split by Waiver of Plat No. 20559
- Street with the least dimension is Quail Avenue.
- Front yard is located abutting Quail Avenue
- Area between 900 and 910 Quail Avenue is a **side yard**.

Side Yard Front Yard Rear Yard

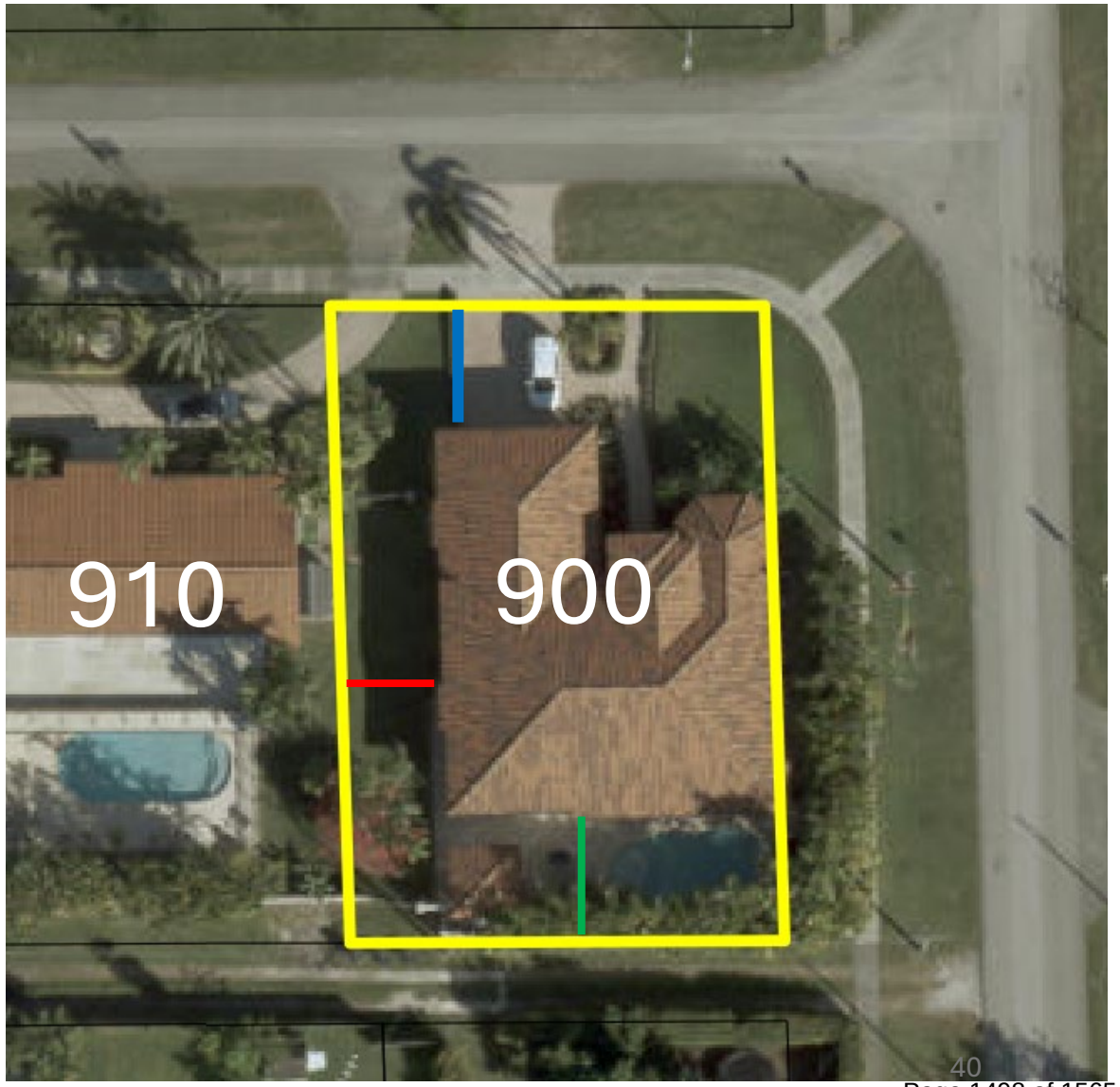

Other Similarly Situated Waiver Of Plat Properties

- 900 (Corner) & 910 (Interior) Pinecrest Drive.
- Split by Waiver of Plat No. D-22771
- Street with the least dimension is Pinecrest Dr.
- Front yard of 900 is located abutting Pinecrest Dr.
- Area between 900 and 910 Pinecrest Dr. is a **side yard**.

Side Yard Front Yard Rear Yard



Other Similarly Situated Waiver Of Plat Properties

- 501 (Corner) & 517 (Interior) Palmetto Drive.
- Split by Waiver of Plat
- Street with the least dimension for 501 is Palmetto Dr.
- Front yard of 501 is located abutting Palmetto Dr.
- Area between 501 and 517 Palmetto Dr. is a **side yard**.

Side Yard Front Yard Rear Yard



Other Similarly Situated Waiver Of Plat Properties

- 901 (Corner) & 903 (Interior) Dove Avenue.
- Split by Plat – Plat Book 151, Page 24
- Street with the least dimension for 901 is Dove Ave.
- Front yard of 901 is located abutting Dove Ave.
- Area between 901 and 903 Dove Ave. is a **side yard**.

Side Yard Front Yard Rear Yard



Other Similarly Situated Waiver Of Plat Properties

- 1101 (Corner) & 1105 (Interior) Bluebird Avenue.
- Split by Waiver of Plat
- Street with the least dimension is Bluebird Ave.
- Front yard of 1101 is located abutting Bluebird Ave.
- Area between 1101 and 1105 Bluebird Ave. is a **side yard**.

Side Yard Front Yard Rear Yard



150-002(C)85 versus 150-002(C)18(e)

- 2201 Ludlam Rd.
  - Narrower frontage is Ludlam Rd.
  - Front of lot and home has been re-faced toward Robin Av.
  - **Front yard remains on Ludlam Rd.**



150-002(C)85 versus 150-002(C)18(e)

“Front” of home is shown where garage, main entrance is.



2201 Ludlam Road

Narrower dimension street is Ludlam Rd.

- Front yard (30’) abutting Ludlam Rd.
- Side yard (street) (20’) abutting Robin Ave.
- Side yard (15.65’) abutting neighbor.
- Rear yard (25’) abutting alley.

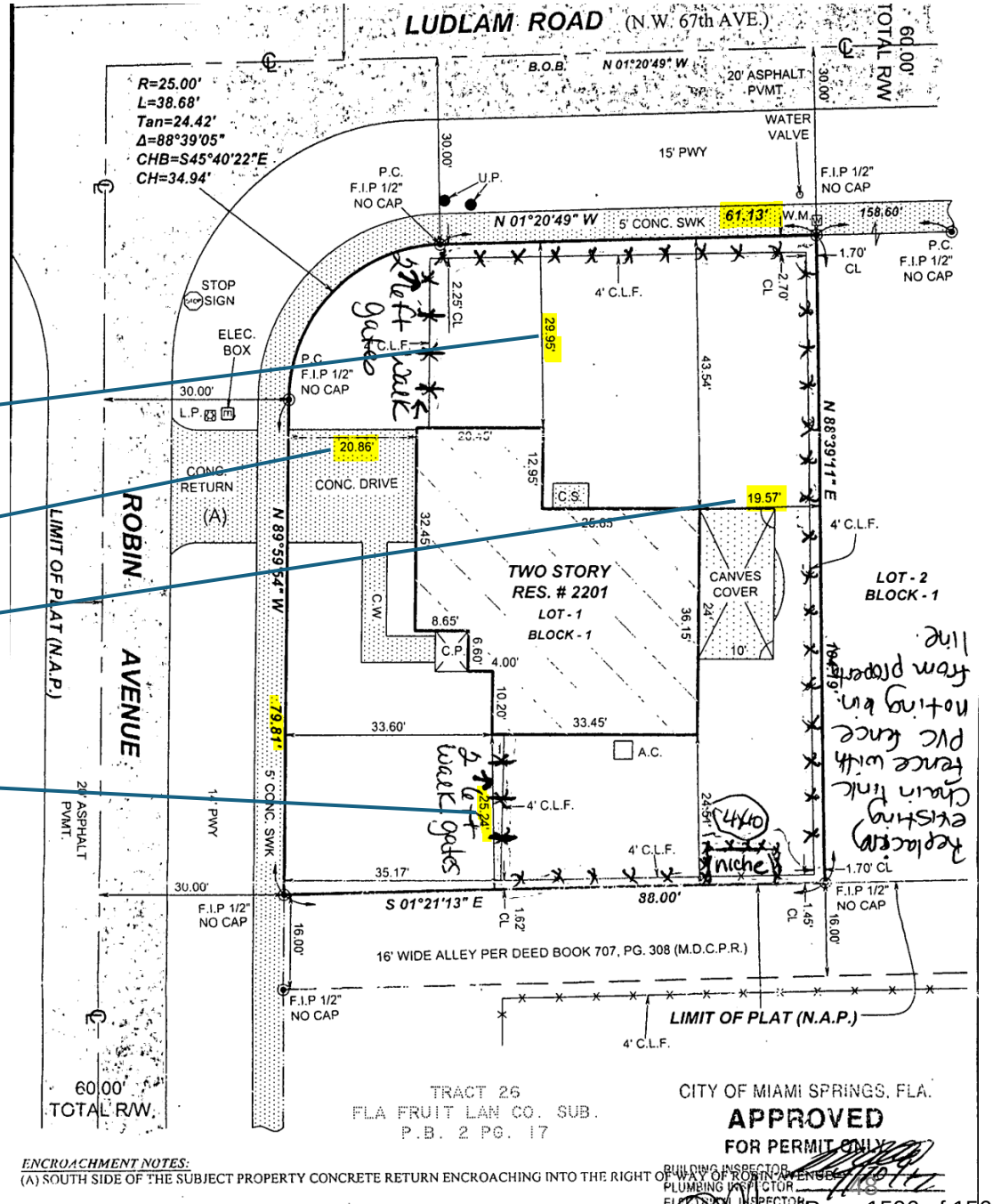

2201 Ludlam Road

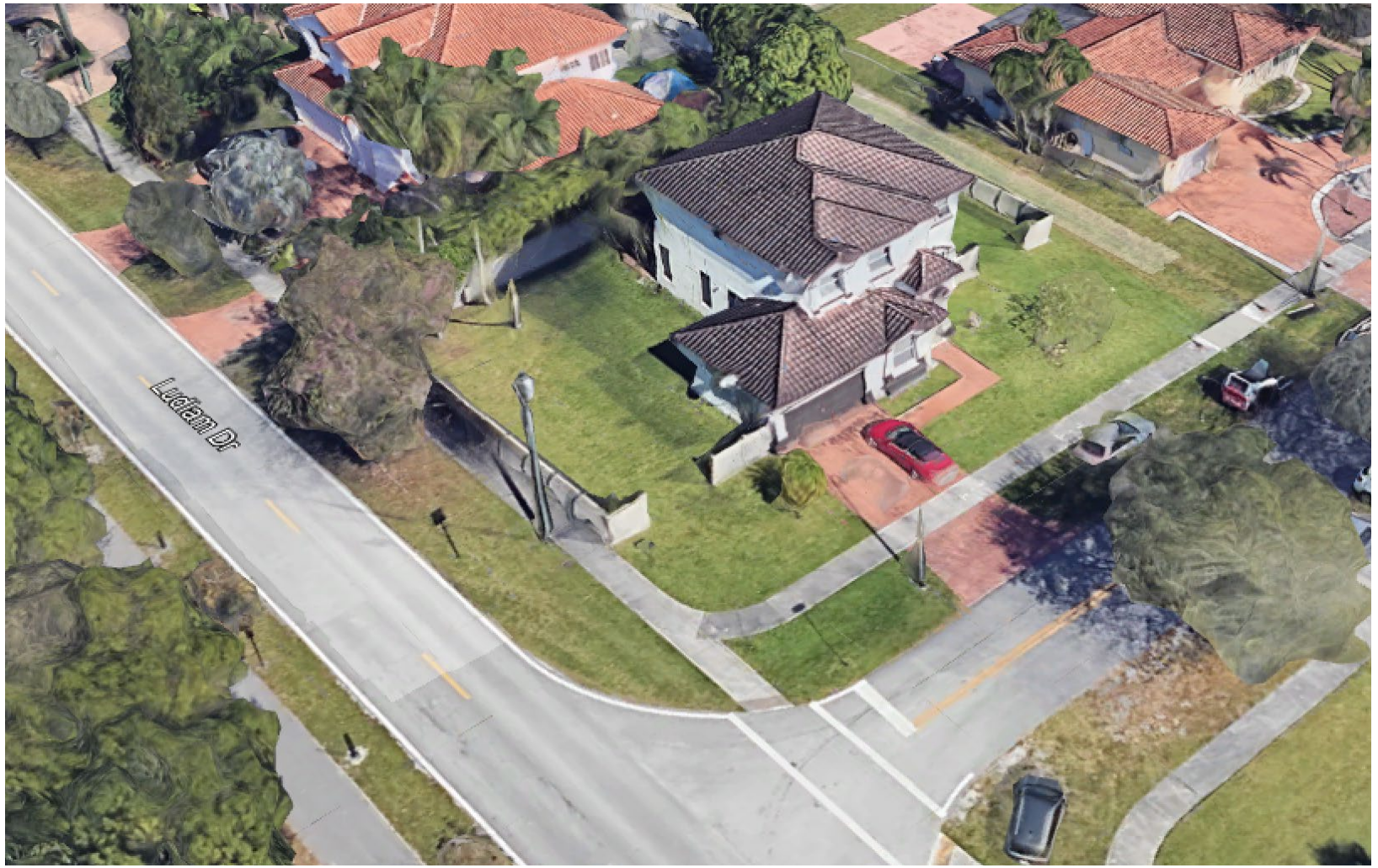

Source: Google Earth

Section 150-002(C)(18)(e)

- (18)(e) *Front*. The front of a lot shall be construed to be the portion nearest the street. For corner lots, the lot front shall be the narrowest portion abutting the street, unless determined otherwise by the planning and zoning director.

200 N. Esplanade Appeal

Miami Springs
Board of Adjustment

February 26, 2025



akerman


Falcon Ave
Falcon Ave
Falcon Ave
Esplanade Dr
Esplanade Dr
Esplanade Dr

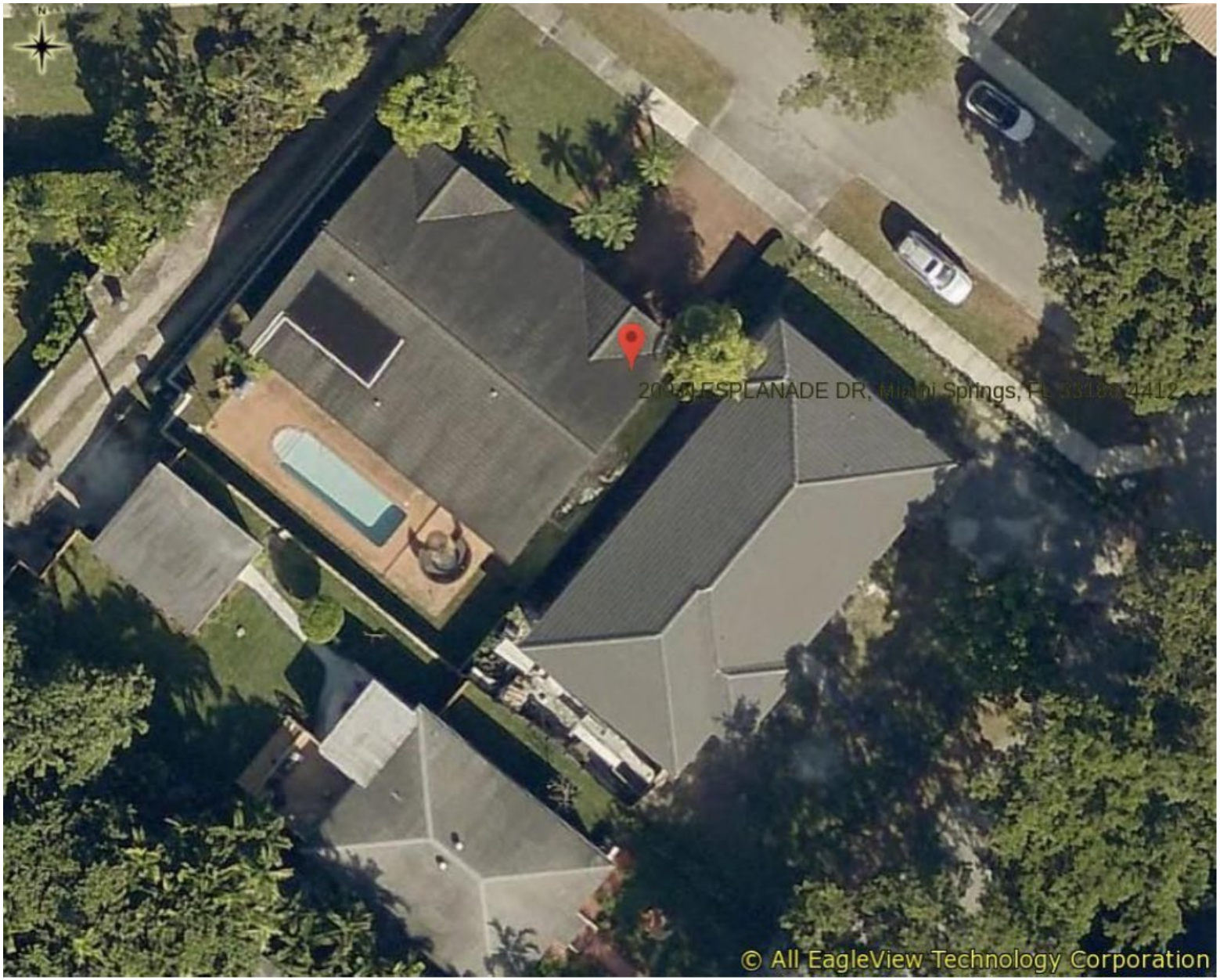
© All EagleView Technology Corporation



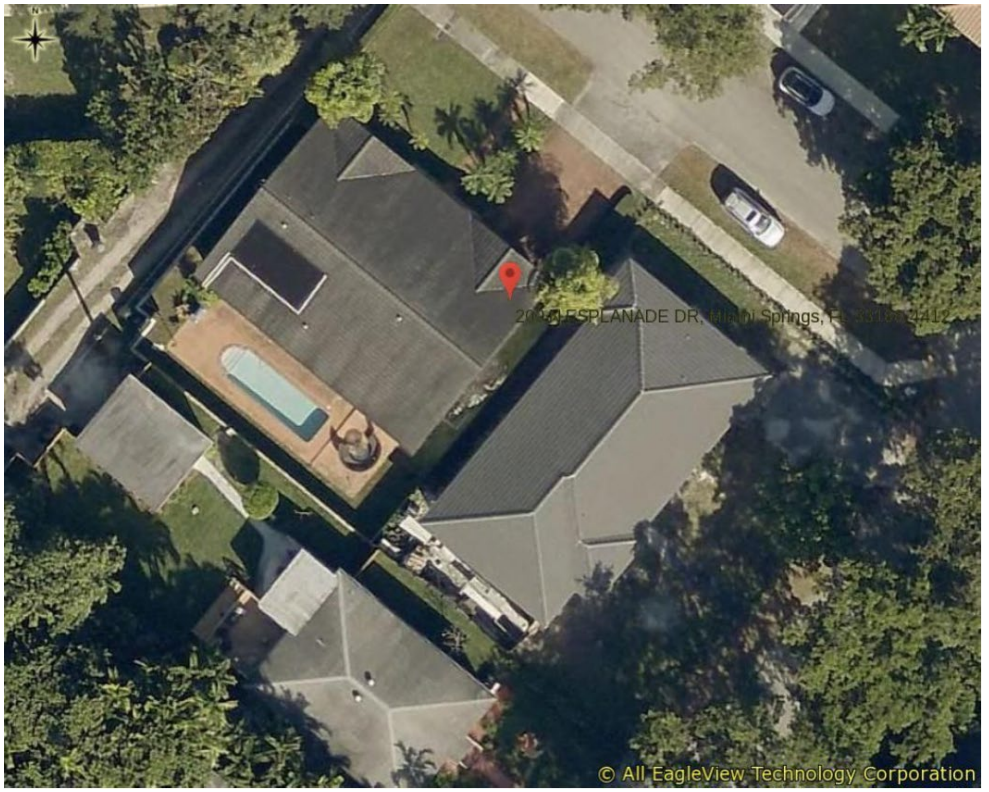

2007

2024

akerman


© All EagleView Technology Corporation

How did this happen?

- City/Applicant failed to investigate public records
    - No Due Diligence
- City/Applicant failed to adhere to zoning code
- City/Applicant failed to follow proper procedures
    - No Notice
    - No Due Process
    - No Board of Adjustment Hearing
    - No Variance

Relevant History



Two Platted Lots

50 x 150

With Frontage (Front Yard) on Esplanade

BUILDING INFORMATION

Building Number	Sub Area	Year Built	Actual Sq.Ft.	Living Sq.Ft.	Adj Sq.Ft.	Calc Value
1	1	1947	1,324	990	1,133	$93,133

1947

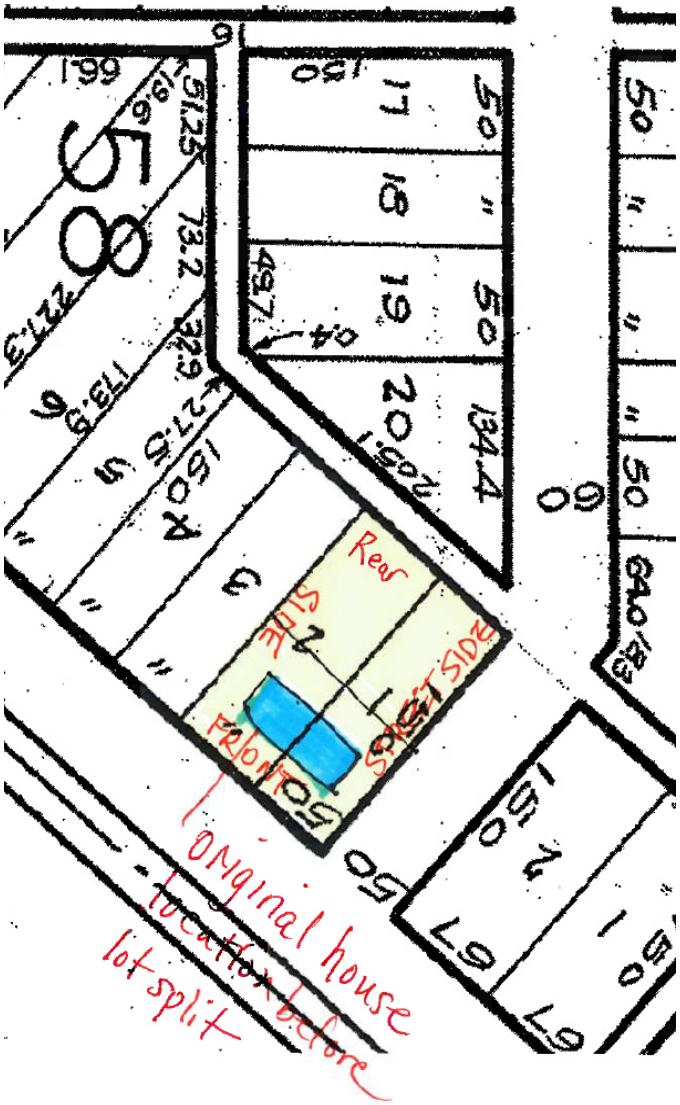

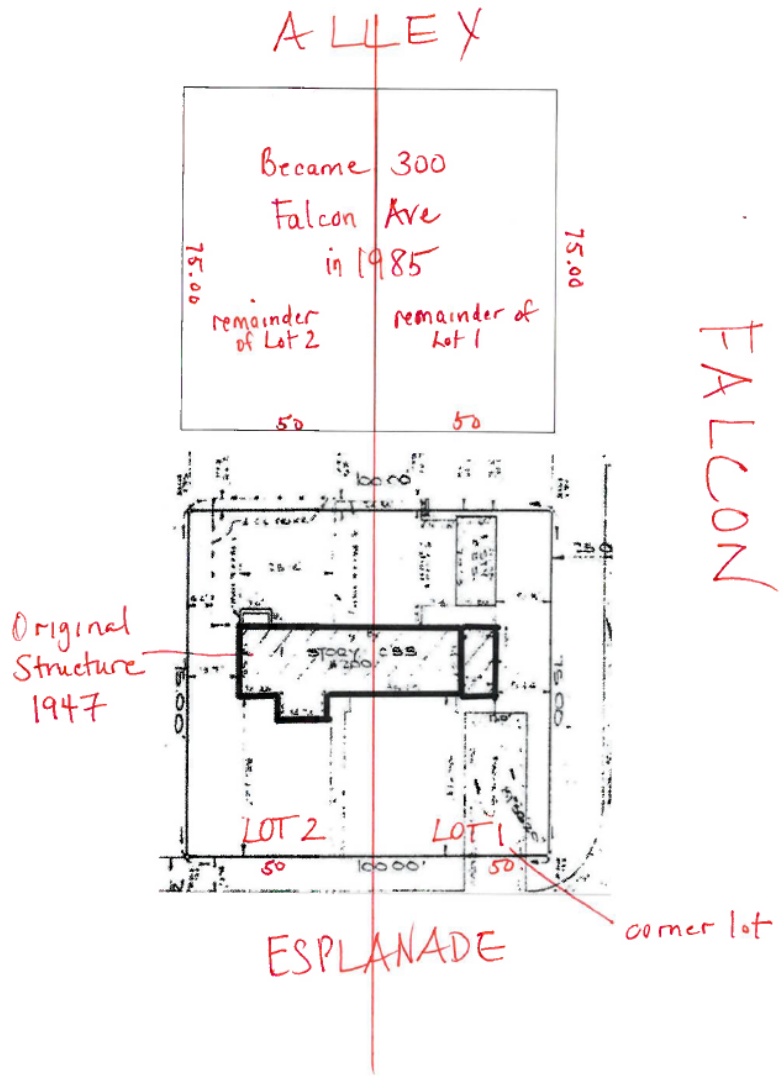

Miami-Dade County Public Records indicate that the original property on which the house was built consisted of two platted lots oriented from northwest to southwest and described as Lots 1 and 2, Block 58, of Cinema Park Addition to Country Club Estate, according to the Plat thereof, as recorded in Plat Book 17, Page 2 (Figure 2), with a total area of 15,000 square feet. At the time, pursuant to the Miami Zoning Code subsections 150-003(18) and 150-003(85), the consolidated site would have been considered a corner lot with a frontage on Esplanade Drive due to the shorter dimension (100 ft) of the site facing onto that roadway. Thus the 1947 structure that exists on what today is the 200 N. Esplanade Drive location was built with setbacks in compliance with that orientation.

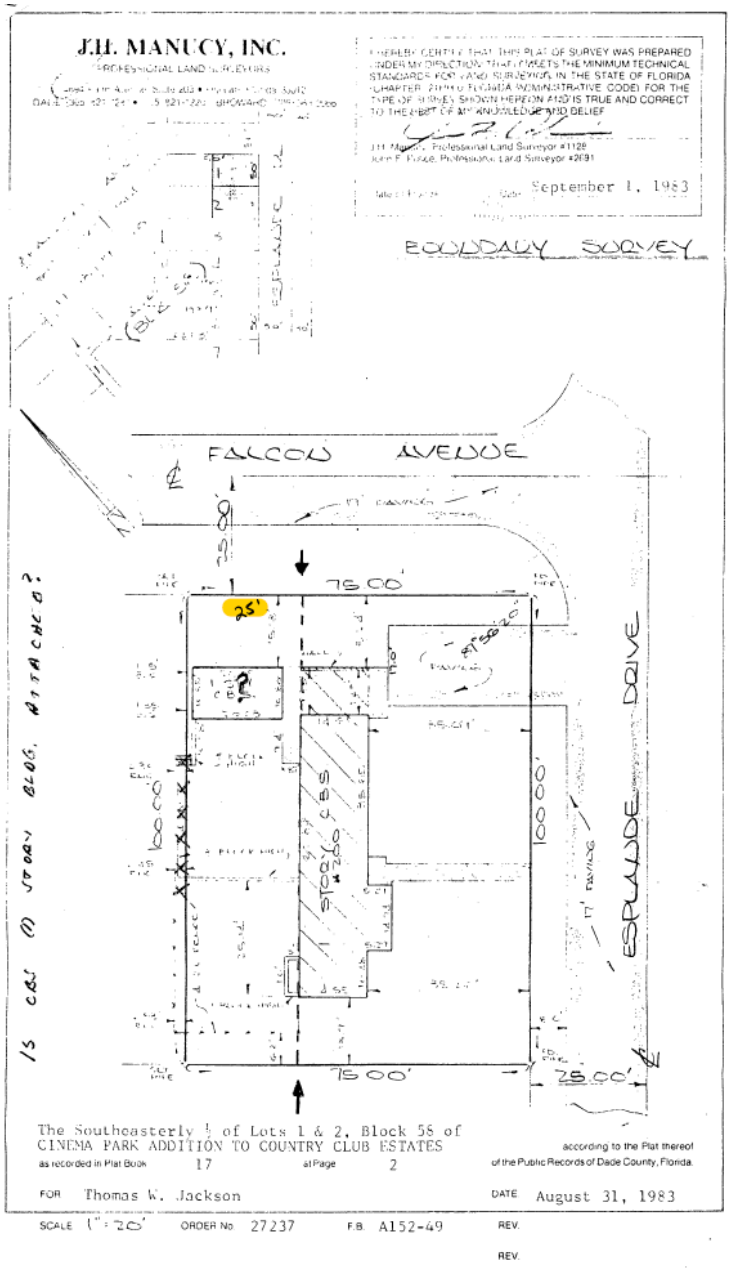
J.H. MANUCY, INC.
PROFESSIONAL LAND SURVEYORS
I HEREBY CERTIFY THAT THIS PLAT OF SURVEY WAS PREPARED UNDER MY DIRECTION, THAT IT MEETS THE MINIMUM TECHNICAL STANDARDS FOR LAND SURVEYING IN THE STATE OF FLORIDA CHAPTER 21HH-6 FLORIDA ADMINISTRATIVE CODE) FOR THE TYPE OF SURVEY SHOWN HEREON AND IS TRUE AND CORRECT TO THE BEST OF MY KNOWLEDGE AND BELIEF
J.H. Manucy, Professional Land Surveyor #1128
John F. Fuqua, Professional Land Surveyor #2891
September 1, 1983
BOUNDARY SURVEY
FALCON AVENUE
75.00'
25'
STORAGE
100.00'
ESPLANADE DRIVE
75.00'
25.00'
The Southeasterly ½ of Lots 1 & 2, Block 58 of
CINEMA PARK ADDITION TO COUNTRY CLUB ESTATES
as recorded in Plat Book 17 at Page 2
according to the Plat thereof of the Public Records of Dade County, Florida.
FOR Thomas W. Jackson
DATE August 31, 1983
SCALE 1" = 20' ORDER No. 27237 F.B. A152-49 REV.
REV.

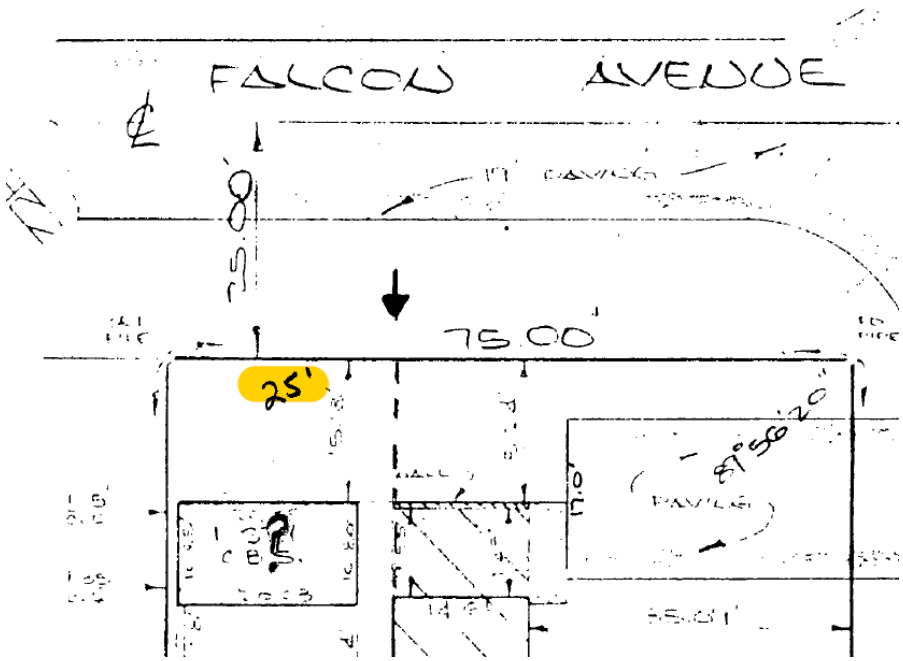
FALCON AVENUE
75.00'
25'

1984 Waiver of Plat

(To allow construction of 300 Falcon Avenue home)

Irv Zahn, Inc. Realtor

REALTOR

78 CANAL STREET • MIAMI SPRINGS, FLORIDA 33166 • PHONE: (305) 888-8404

- Buy • Sell • Trade
- Residential
- Commercial
- Acreage
- Investments
- Appraisal Services

August 4, 1983

Mr. Dave Wells
Building Inspector
City of Miami Springs
Miami Springs, Fl. 33166

Re: ½ Lots 1 & 2 Block 58, Cinema Park Addition to CCE
PB 17 Page 2. AKA 200 Esplanade Drive, Miami Springs, Fl.

Dear Mr. Wells:

Regarding our conversation on the above lot please be advthat I represent the owners and they wish to split Lots 1 & 2 into 2 75 x 100 foot lots.

Please advise in writing that permission and a permit will be granted to built a single family home.

Please note that the existing house has a 7 to 8 foot encroachment and the owner does not wish to demolish at this time.

Respectfully submitted,

Irving H. Zahn
Agent for owners

IHZ;nm

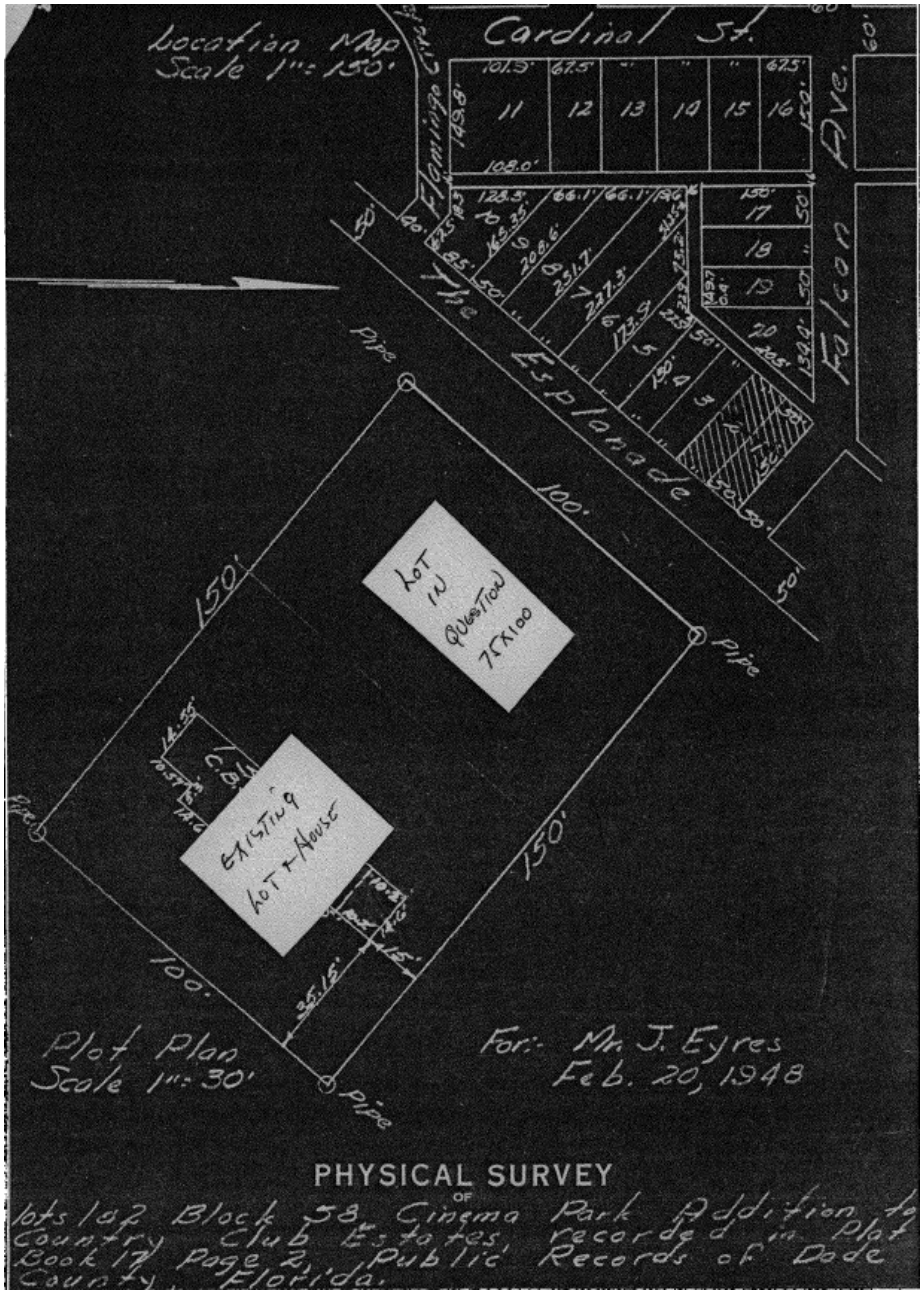

City of MIAMI SPRINGS Florida

BUILDING AND ZONING DEPARTMENT
201 WESTWARD DRIVE
MIAMI SPRINGS, FL 33166

TELEPHONE
(305) 885-4581

13 September 1983

Mr. Irving Zahn
Irv Zahn, Inc.
78 Canal Street
Miami Springs, FL 33166

Mr. Thomas W. Jackson
200 N. Esplanade Drive
Miami Springs, FL 33166

Re: 200 Esplanade Dr./300 Falcon Ave.

Gentlemen:

The division of land in order to build new homesites is in keeping with municipal growth and rising values. Congratulations.

Two surveys of at least 75' x 100' can be accepted and approved if no permanent construction violates a clear separation of the lots, and/or creates a nonconforming improvement situation.

Since the structures seem only to be of an accessory value, please remove them to a line that will yield 10% on side and 25' in the rear, as a description for setbacks.

Field corrected surveys will be acceptable, if initialed by the engineer. "Saving" part of the utility room would be a matter for reference to the Board of Adjustment.

If you require further clarification of this program, please do not hesitate to call.

Yours truly,

Dave Wells
Building Official
City of Miami Springs

DW/jd

"Cannot create a nonconforming improvement situation"

Remove accessory structures to yield 25-foot rear yard setback

City of MIAMI SPRINGS Florida

18 June 1984

Mr. Thomas W. Jackson
200 North Esplanade Drive
Miami Springs, FL 33166

Mr. Irving Zahn
Zahn Realty
78 Canal Street
Miami Springs, FL 33166

Gentlemen:

Clarification of a procedure for qualifying a building site, is as follows:

Letter from owner.
Two new surveys.
Owner's plan for achieving proper setbacks.
Owner's plan for providing underground utilitites to both sites.

Owner's plan for achieving proper setbacks.

200 N. Esplanade Dr.: (With modified improvement) to become legal description: S.E. 1/2 of Lots 1 & 2, Block 58, Cinema Park.

300 Falcon Avenue: To become legal description: N.E. 1/2 of Lots 1 & 2, Block 58, Cinema Park.

Please be advised that prior to issuing a "Waiver of Plat" to allow subdivision, 200 N. Esplanade must show front setback of 30', rear setback of 25', and 10% side setbacks. 300 Falcon Avenue must show a 5' rear easement deeded in perpetuity, as a means to serving underground utilities to the corner lot.

Please be advised that prior to issuing a "Waiver of Plat" to allow subdivision, 200 N. Esplanade must show front setback of 30', rear setback of 25', and 10% side setbacks.

Dave Wells
Building Official

NOTE: A complete record of information in our files is forwarded for your convenience.

References: Miami Springs Code of Ordinances, Sections 150.18, 150.19, 150.20, 150.43; Ordinances No. 465 (7/29/70) and No. 504 (1/24/72).

DW/jd
Encls.

City of MIAMI SPRINGS Florida

BUILDING AND ZONING DEPARTMENT
201 WESTWARD DRIVE
MIAMI SPRINGS, FL 33166

TELEPHONE
(305) 885-4581

20 June 1984

Mr. Thomas W. Jackson
200 N. Esplanade Drive
Miami Springs, FL 33166

Dear Mr. Jackson:

In compliance with your request, this letter is to advise you of the City's requirements should the owner of the 100' x 150' lot located at 200 Esplanade Drive wish to subdivide the lot into two 75'x100' lots.

1. First, the owner of the subject property should submit a letter to this department requesting the City's approval to subdivide the lot into two 75' x 100' parcels. If the owner intends to apply for a building permit for the subdivided property, the letter should state this intention.

2. Along with the letter, there should be a copy of a current survey showing the location of all improvements on the property. The improvements should be restricted to a 75' x 100' portion of the overall platted lot of record and must not encroach upon the 75' x 100' portion for which the owner intends to apply for a building permit. Furthermore, the existing improvements must comply with all setback requirements. In this case, the house which is presently situated on the lot and facing 200 N. Esplanade Drive must:

a) Be located on a 75' x 100' lot.

b) Have minimum setbacks: front yard setback of 30'; rear yard setback of 25'; 15' setback on the side of the house facing Falcon Avenue, and a 10' setback on the south side of the house.

No building permit can be issued for the remaining 75' x 100' portion of the platted lot until all encroachments into the above described setback areas have been removed.

3. The owner should provide a survey showing the proposed locations of water, sewer, electric, telephone, gas and television cable. The appropriate utility agencies must approve the locations and relocations of all utilities.

To: Thomas W. Jackson

Re: 200 N. Esplanade Drive

4. A "Waiver of Plat" must be prepared for the City Manager's signature.

5. The owner must pay the cost of extending sewer lateral to the property line.

6. The owner must also pay the cost of a sewer assessment which is required by Chapter 50, Section 50.20 of the City Code. This section is attached hereto for your reference.

Yours truly,

Dave Wells
Building Official

DW/jd
Attch.

cc: City Manager

Dear Mr. Jackson:

In compliance with your request, this letter is to advise you of the City's requirements should the owner of the 100' x 150' lot located at 200 Esplanade Drive wish to subdivide the lot into two 75'x100' lots.

for which the owner intends to apply for a building permit. Furthermore, the existing improvements must comply with all setback requirements. In this case, the house which is presently situated on the lot and facing 200 N. Esplanade Drive must:

b) Have minimum setbacks: front yard setback of 30'; rear yard setback of 25'; 15' setback on the side of the house facing Falcon Avenue, and a 10' setback on the south side of the house.

No building permit can be issued for the remaining 75' x 100' portion of the platted lot until all encroachments into the above described setback areas have been removed.

City of MIAMI SPRINGS Florida

MEMORANDUM

TO: CITY MANAGER & CITY BUILDING DIRECTOR

FROM: CITY ATTORNEY

RE: JACKSON/ZAHN;
SEWER ASSESSMENTS;
SUBDIVISION IMPROVEMENTS;

DATE: JULY 23, 1984

Gentlemen:

We have been asked to review a current situation which involves two (2) existing platted lots, the re-subdivision of these lots into two (2) new lots, and the payment of sewer assessments and subdivision improvements in regard to this matter.

Initially, it is quite clear that the City of Miami Springs Code of Ordinances requires that sewer assessments be charged for "all parcels of property or portions thereof" to help defray the debt service and other costs of the sanitary sewer system. (Ordinance 50.17) All assessments begin to accrue at the time that the system became operational. (Ordinance Section 50.17)

Owners of unimproved properties, however, are permitted to stay the collection of all sewer assessments when these properties cannot comply with existing zoning requirements, are not intended for development, or will not utilize, nor benefit from, the sanitary sewer system to the same extent as other improved parcels. (Code Section 50.18).

The common factor utilized in determining "stay eligibility" seems to be ownership of "unimproved platted lots." (Code Section 50.19) It is quite clear, in the present case, that a stay of assessment

---

was permitted because the unimproved platted lot was abutting an improved platted lot where a unity of title existed and because the homesite was comprised of both platted lots and only one (1) sewer connection. (Code Section 50.19).

There does not seem to be any question that all platted lots are liable for sewer assessments from the date of operation of the system. It is equally clear that all prior, but stayed assessments, become due and payable when an unimproved parcel begins being specially benefited from its utilization of the sewer system.

In the present case, since the unimproved platted lot will now be used to create a new homesite, it is now being specially benefited from the system, and is now liable for all prior sewer assessments.

Further, the issue of a subdivision improvement (sewer connection lateral) has been raised in this matter due to the fact that the two (2) platted lots are now being split sideways and turned around to create a new buildable homesite which is not adjacent to the sewer system.

It has been our experience, and that of the Public Works Department, that situations such as this require that the owner or developer pay the cost of providing whatever subdivision improvements are required to secure a building permit for the new homesite.

This position is supported by our Code of Ordinances which allows the re-subdivision of property without the necessity of platting so long as certain specific conditions are met. (Code Section 150.020).

The Building and Zoning Department may require all improvements that it deems to be a necessary part of a new division of existing property. (Code Section 150.020).

Therefore, if the Building and Zoning Department determines that the new homesite needs any subdivision improvements, it will be the responsibility of the owner or developer to provide them for the new homesite.

If you have any further questions, please do not hesitate to contact me.

Sincerely,

JAN K. SEIDEN

JKS/bt

ORDINANCE NO. 287

AN ORDINANCE AMENDING CHAPTER 25 OF THE CODE OF ORDINANCES OF THE CITY OF MIAMI SPRINGS, BY ADDING SECTION 25-12.1 THERETO.

BE IT ORDAINED BY THE CITY OF MIAMI SPRINGS:

Section 1. That Chapter 25 of the Code of Ordinances of the City of Miami Springs be and the same is hereby amended by adding Section 25-12.1 so that the same shall read as follows:

Section 25-12.1 PLATS AND PLATTING - EXCEPTIONS:

Whenever land is subdivided within the City of Miami Springs, a plat must be recorded. A subdivision plat must first have been approved by the City Council and filed of record in accordance with the platting law, except that the filing and recording of the plat will not be required if:

2. The land to be subdivided is to be divided into no more than two parcels and because of

(a) Unusual conditions created by owner or development of adjacent lands or

(b) The isolation or remoteness of the land concerned in relation to other plat or improved lands or

(c) Improvements and dedications existing on the land substantially in accordance with the requirements of this Chapter, it is determined by the Director of the Building and Zoning Department that waiving of the requirements for platting would not conflict with the purpose and intent of this Chapter.

In lieu of platting, the Director of the Building and Zoning Department may require any dedications, reservations or improvements required in connection with platting under this Chapter, including the posting of a surety bond as may be necessary to carry out the intent and purpose of this Chapter.

3. The subdivision of land heretofore platted is of such unusual size or shape, or is surrounded by such development or unusual conditions as may be determined by the Director of the Building and Zoning Department, to justify the waiving of the requirements for recording a plat. In lieu of recording of a plat, such conditions may be imposed as may be deemed necessary and appropriate to preserve the public interest.

Section 2: In all other respects, said Code of Ordinances of the City of Miami Springs is unaffected by this Ordinance.

Section 3: This Ordinance shall be incorporated in the Code of Ordinances of the City of Miami Springs, Florida, and shall become effective immediately upon its passage.

In lieu of recording of a plat, such conditions may be imposed as may be deemed necessary and appropriate to preserve the public interest.

City Clerk

First Reading, November 25, 1963

Second Reading, December 9, 1963

Building Permit B-415

Demo of Rear Yard Structures

CITY OF MIAMI SPRINGS, FLORIDA

BUILDING PERMIT APPLICATION

HOMEOWNER
3118-16-159

DATE ~~8/28~~ 9/7/84 Tele # 888-8404 Permit No. B-415 ✓ Demo.

(This application must be submitted by two (2) sets of plans and specifications)

Application is hereby made for approval of the detailed statement of plans for the building, or other structure, herein described. The Applicant hereby agrees that all provisions of the Laws of the State of Florida and all Ordinances of the City of Miami Springs, Florida, will be complied with.

Owner's Name & Address FAY ZAHN (JACKSON)

Street & Number where work is to be done 200 ESPLANADE

Architect HO

Name & Address of Contractor/Builder HO

Location & Legal Description of lot to be built on:

Lot 1 & 2 Block 58 Subdivision Cinema Pk

Purpose of Building: House ____ Multi Family ____ Commercial ____ No. of Stories ____

New Building ____ Remodeling ____ Addition ____ Repairs ____

To be constructed of: Kind of Foundation ____ Roof Covering ____

Distance to next nearest building ____ Size of building lot ____

I HEREBY SWEAR OR AFFIRM, THAT THE FACTS STATED HEREON ARE TRUE.

LICENSE(S) NO. ____

The City follows Section 304.5.6.7 of the SOUTH FLORIDA BUILDING CODE. 1,000

X [signature]
Signature of Applicant

FAILURE TO COMPLY WITH MECHANICS LIEN LAW CAN RESULT IN THE PROPERTY OWNER PAYING TWICE FOR BUILDING PERMITS.

SURVEY ATTACHED.

DO NOT USE THIS SPACE

Floor Area sq. ft.	1
Est. cost sq. ft.	
Est. Total cost	
Bldg. Permit fee	
Bond	
Total	$20.00

Approved: [signature] Building Inspector

Approved: ____ Plumbing Inspector

Approved: ____ Electrical Inspector

ALL PERMITS MUST BE PICKED UP IN PERSON.

MIN. FEE: $20.00

This space represents the lot, indicate the building in space showing the distance from lot lines and other buildings, etc.

"Partial" DEMOLITION OF ACCESSORY BLDG. and REAR YARD STRUCTURES TO PROVIDE SETBACKS.

(Orig.) White — OFFICE
(Dupl.) Canary — AUDITOR'S COPY
(Tripl.) Pink — CONTRACTOR'S COPY

"Partial" DEMOLITION OF ACCESSORY BLDG. and REAR YARD STRUCTURES TO PROVIDE SETBACKS.

One of the items outlined in Mr. Wells letter is that, in order for a building permit to be issued for the construction of a home on the 300 Falcon Avenue lot, any and all encroachments from prior construction at 200 N. Esplanade Dr. would first need to be removed. Consequently, the homeowner applied for a permit (B-415), issued by Mr. Wells own signature on September 7, 1984, for "partial demolition of an accessory building and area yard structures to provide setbacks." Not only was total demolition of the existing accessory building ccessory structure setback, but evide the requirement outlined in Mr. Well d to the owner of 300 Falcon Avenue ming pool on that lot.

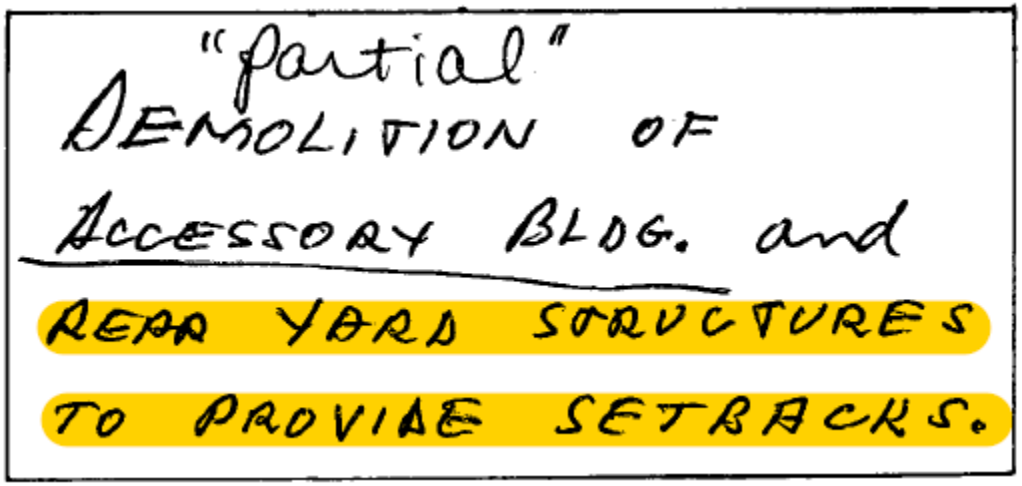

In 2004, the City issu use which existed along the same sid being appealed. The 2004 addition extended eleven feet and a half (11 ft-6 in) from the north side of the house toward Appellant's property.

AFFIDAVIT

Date_____

City of Miami Springs
Building and Zoning Department
201 Westward Drive
Miami Springs, Florida 33166

Demo.: accessory Bldg.

/ss/_____
PROPERTY OWNER

SWORN TO AND SUBSCRIBED BEFORE ME,

This 6th day of Sept., 1984.

Joan D'Amanda
Notary Public State of Florida

My Commission expires:

Reference: Miami Springs Code of Ordinances:
#184 of 2-8-1954 and
#224 of 5-26-1958.

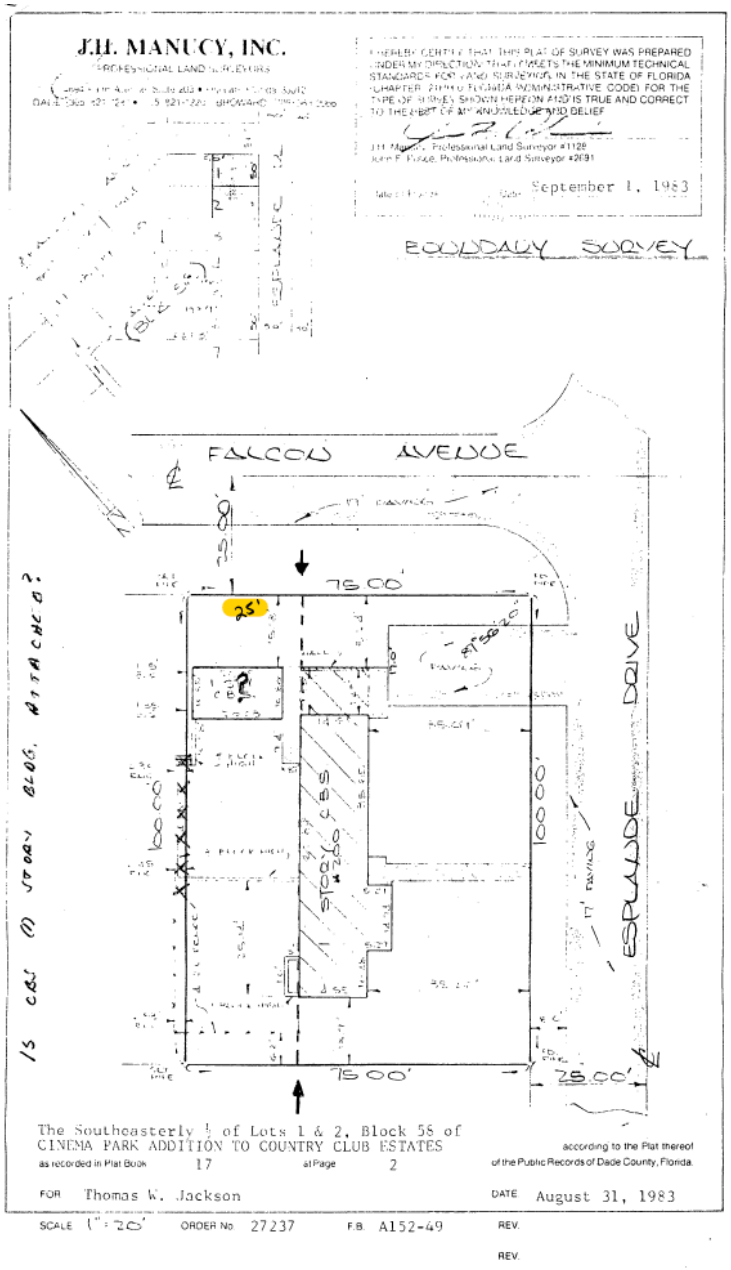
J.H. MANUCY, INC.
PROFESSIONAL LAND SURVEYORS
I HEREBY CERTIFY THAT THIS PLAT OF SURVEY WAS PREPARED UNDER MY DIRECTION, THAT IT MEETS THE MINIMUM TECHNICAL STANDARDS FOR LAND SURVEYING IN THE STATE OF FLORIDA CHAPTER 21HH-6 FLORIDA ADMINISTRATIVE CODE) FOR THE TYPE OF SURVEY SHOWN HEREON AND IS TRUE AND CORRECT TO THE BEST OF MY KNOWLEDGE AND BELIEF
J.H. Manucy, Professional Land Surveyor #1128
John F. Fuqua, Professional Land Surveyor #2891
September 1, 1983
BOUNDARY SURVEY
FALCON AVENUE
75.00'
25'
STORAGE
100.00'
ESPLANADE DRIVE
75.00'
25.00'
The Southeasterly ½ of Lots 1 & 2, Block 58 of
CINEMA PARK ADDITION TO COUNTRY CLUB ESTATES
as recorded in Plat Book 17 at Page 2
according to the Plat thereof of the Public Records of Dade County, Florida.
FOR Thomas W. Jackson
DATE August 31, 1983
SCALE 1" = 20' ORDER No. 27237 F.B. A152-49 REV.
REV.

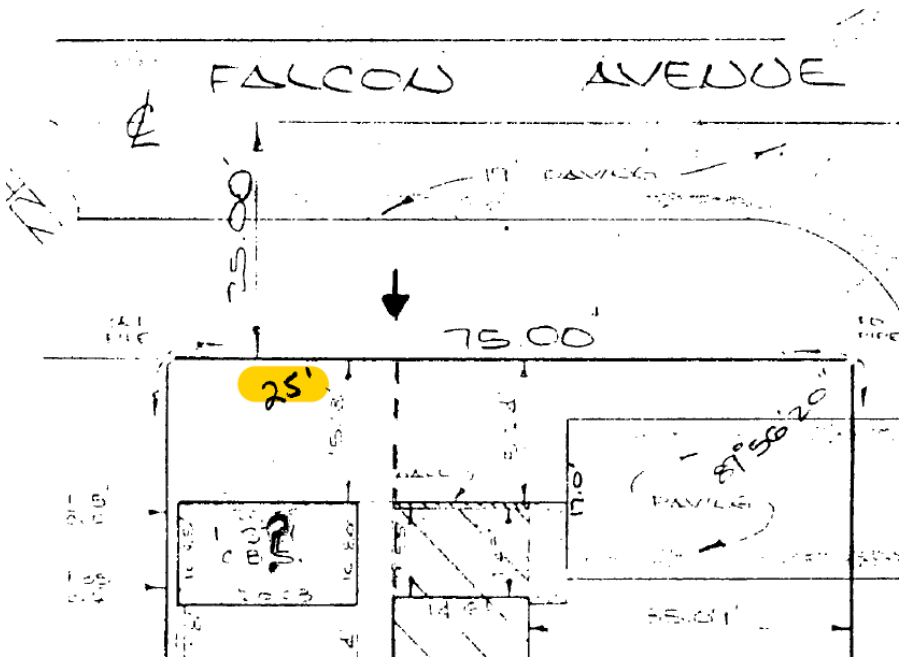
FALCON AVENUE
75.00'
25'

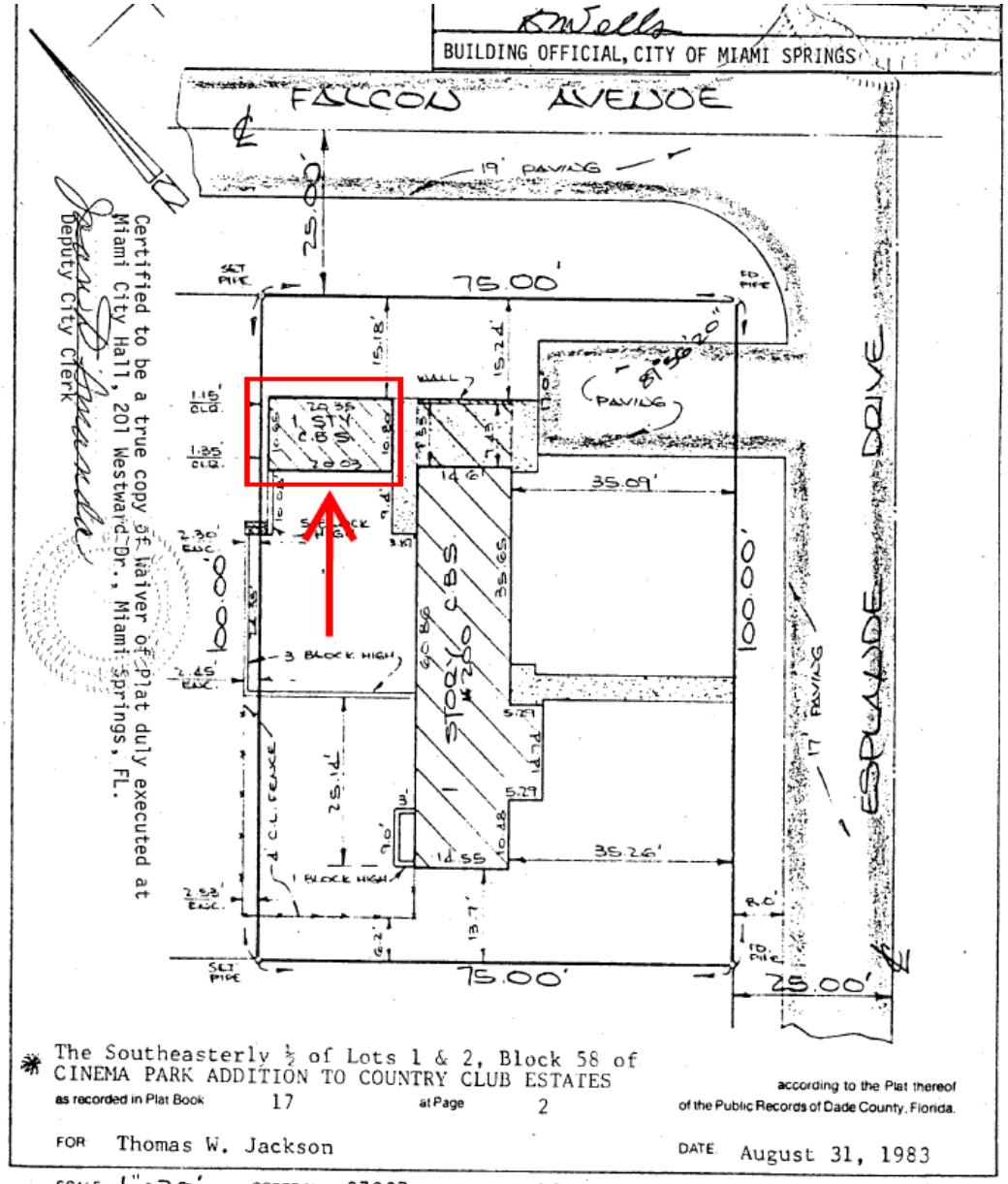
BUILDING OFFICIAL, CITY OF MIAMI SPRINGS
FALCON AVENUE
19' PAVING
25.00'
75.00'
SET PIPE
FD. PIPE
WALL
PAVING
1.15' CLR.
1.35' CLR.
20.35
1 STY C.B.S.
20.03
35.09'
100.00'
3 BLOCK HIGH
2.30' ENC.
2.45' ENC.
STORY C.B.S.
35.26'
1 BLOCK HIGH
2.53' ENC.
ESPLANADE DRIVE
17' PAVING
Certified to be a true copy of Waiver of Plat duly executed at Miami City Hall, 201 Westward Dr., Miami Springs, FL.
Deputy City Clerk
The Southeasterly ½ of Lots 1 & 2, Block 58 of CINEMA PARK ADDITION TO COUNTRY CLUB ESTATES
as recorded in Plat Book 17 at Page 2
according to the Plat thereof of the Public Records of Dade County, Florida.
FOR Thomas W. Jackson
DATE August 31, 1983
SCALE 1" = 20'
ORDER No. 27237
F.B. A152-49
REV.

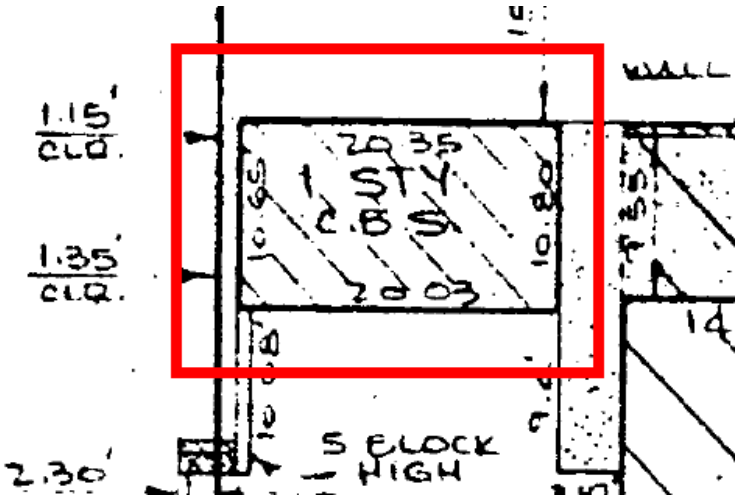
1.15' CLR.
1.35' CLR.
20.35
1 STY C.B.S.
20.03
WALL
5 BLOCK HIGH
2.30'



BUILDING AND ZONING DEPARTMENT
201 WESTWARD DRIVE
MIAMI SPRINGS, FL 33166

TELEPHONE
(305) 885-4581

18 October 1984

To Whom It May Concern:

The following deed, legal description, and survey describe two buildable lots 75' x 100'; N.E. and S.E. 1/2 of lots 1 & 2, Block 58, Cinema Park Addition to Country Club Ests., a/k/a 300 Falcon Avenue and 200 N. Esplanade Drive, Miami Springs, FL (33166).

Original lots 1 & 2, forming a parcel of 150' x 100' have been resubdivided into two buildable lots measuring 75' x 100' each; the N.E. portion is improved, the S.E. portion is vacant.

Yours truly,

Dave Wells
Building Official

DW/jd
Encls.: Two Surveys showing Waiver of Plat and Deed of Ownership.

Timeline

Sep 1983 – Building Official makes clear the waiver cannot create a nonconformity and that the accessory structures must be removed to provide rear setback

June 1984 –
Building Official identifies conditions, including required setbacks

Sep 1984 –
Accessory rear yard structure demolished to satisfy plat condition and provide conforming rear yard setbacks

Oct 1984 –
Building Official formally confirms Waiver of Plat approved

Relevant Code Provisions

(9)(16) Building Site: Premises upon which a building is to be located, consisting of a lot or contiguous lots plus portions of lots, but in no case less than one complete unit of platted land.

(a) Area: The total horizontal area within the lot lines of the lot.

(b) Corner: A lot abutting upon two or more streets at their intersection.

(c) Coverage: The percentage of the total area of a lot that, when viewed directly from above, would be covered by all principal and accessory buildings and structures, or portions thereof; provided, however, that open balconies, awnings and porte-cocheres shall not be included in determining the building area.

(d) Depth: The mean horizontal distance between the front and rear lot lines.

(e) Front: The front of a lot shall be construed to be the portion nearest the street. For corner lots, the lot front shall be the narrowest portion abutting the street, unless determined otherwise by the Planning & Zoning Director.

Building Site:

"Front Yard" of Corner Lot subject to determination

Same as it is today

R-1C Setbacks:

30’ Front
7.5’ / 15’ Side
25’ Rear

Same as today

Sec. 34: That Section 25-21 of the Code of Ordinances be and the same is amended as follows:

Section 25-21 25-18. Same - R-1AA R-1C

(d)D. Front yard required. There shall be a front yard of a depth of not less than thirty feet, unless the average depth of the front yard of the contiguous lot or lots is either greater or less than thirty feet, in which case the front yard shall be the average depth of the front yard of the contiguous lot or lots. In case there is no dwelling on the block, the depth of the front yard shall be a minimum of thirty feet. The maximum depth of front yard permitted shall be not more than fifty percent of the depth of the lot, or building site.

-42-

Ord. #599-77

(e)E. Side yard required. ~~There shall be side yards, the width of each to be not less than ten per cent of the average width of the lot but in no case shall each side yard be less than five feet, except that for corner lots the side yard adjoining the street shall be not less than ten feet.~~ For every floor above the first floor, in both new and existing buildings, there must be an additional two and one half (2 1/2) feet set back on the sides; for two and one-half (2 1/2) stories, seven and one-half (7 1/2) feet side yard set-backs over and above the original ten (10) per cent required. Side yards adjacent to the street shall not be less than fifteen (15') feet.

(f)F. Rear yard required. There shall be a rear yard not less than twenty-five feet in depth.

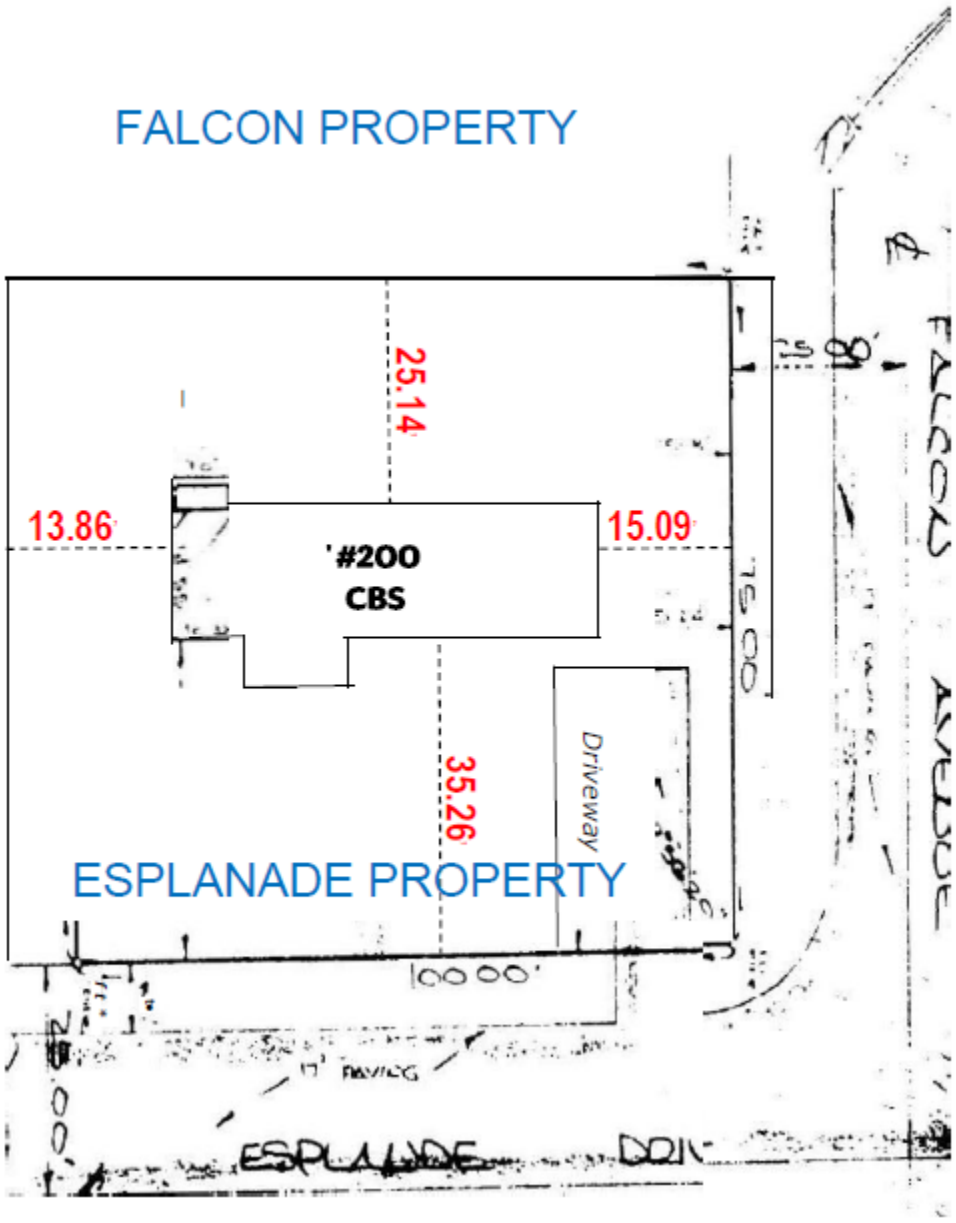

Esplanade Orientation Ensures **Compliance**

> 30’ Front

> 7.5’ Interior Side

> 15’ Street Side

> 25’ Rear

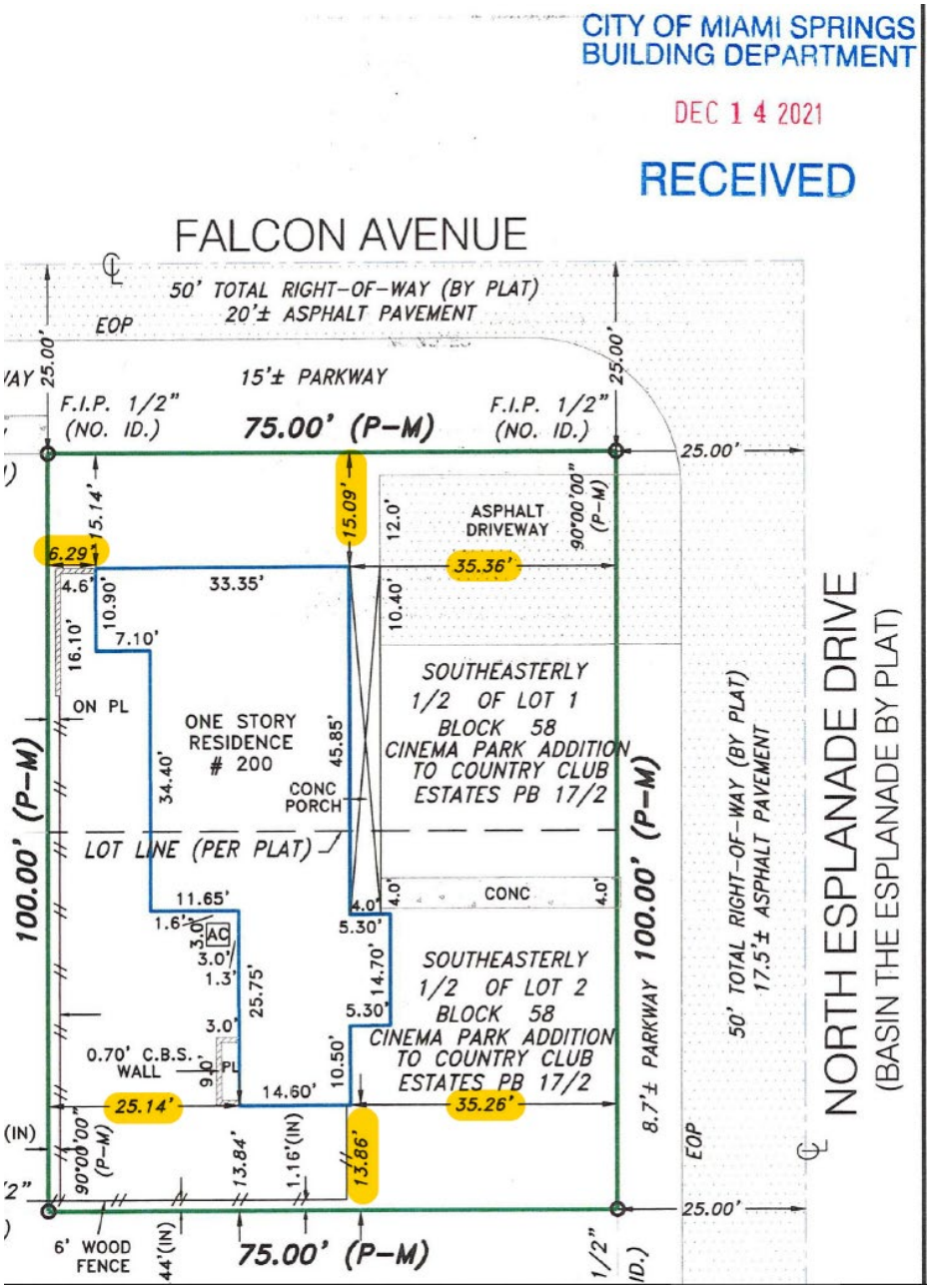

Falcon Orientation Creates Setback

Violations

15’ Front

6.3’ Interior Side

13.8’ Rear

Sec. 34: That Section 25-21 of the Code of Ordinances be and the same is amended as follows:

Section 25-21 25-18. Same - R-1AA R-1C

(a)A. Uses permitted:

(1) One (single) family dwelling; in no case shall there be more than one main building on a lot.

(2) Accessory structures and uses incidental to such single family dwelling the same as in District R-EA R-1A.

Sec. 32: That Section 25-19 of the Code of Ordinances be and the same is amended as follows:

Sec. 25-19 25-16. Single family district - R-EA R-1A

(a)A. Uses permitted:

(1) One (single) family dwelling; in no case shall there be more than one main building on a lot.

(2) Accessory structures and uses incidental to such single family dwelling when placed on the same lot or parcel of land and not used or operated commercially, including: private garage, children's playhouse; tool shed; workshop; servant's quarters and guest houses are prohibited. No accessory building shall be located closer than five (5') feet to any boundary line of the premises. Such accessory structures shall occupy not more than fifteen percent of the area of the rear yard, and shall conform in design, construction and character to that of the main building.

Accessory Structures:

5’ Rear Setback

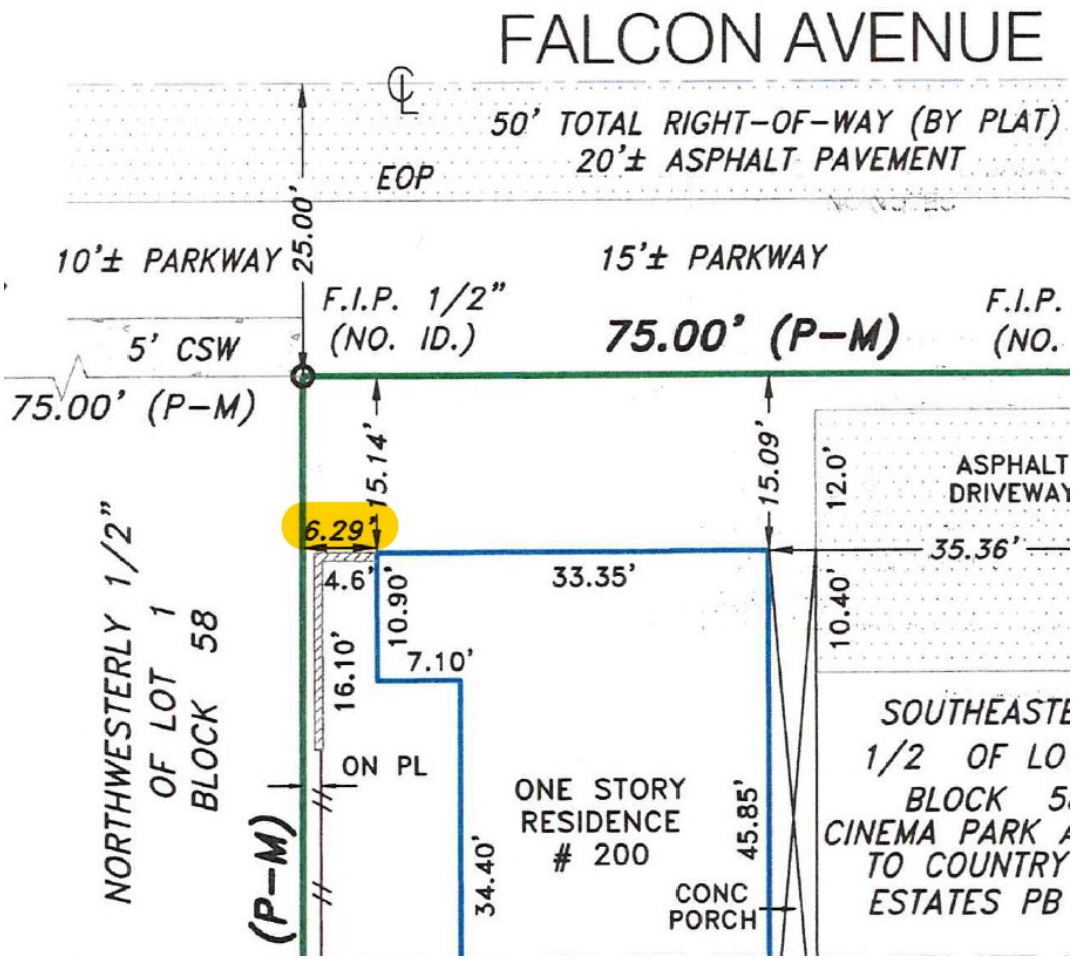

Accessory Structure Partially Demolished to Provide Conforming

5' <u>Rear</u> Setback

for Accessory Structures

Building Permit 04-0686

Rear Yard Aluminum Canopy

CITY OF MIAMI SPRINGS
201 Westward Drive
Miami Springs, Florida 33166
(305) 805-5030

BUILDING PERMIT

Application Number . . . . . 04-00000686 Date 4/20/04
Pin number 970902
Property Address . . . . . 200 ESPLANADE DRIVE
FOLIO NUMBER: 05-3118-016-1590
Application description . . . ADDITION OF CARPORT OR GARAGE
Subdivision Name . . . . . .
Property Use . . . . . .
Property Zoning . . . . . UPDATE
Application valuation 4320

Owner	Contractor
DIAZ, ALAN & MARTHA	OWNER
200 ESPLANADE DRIVE	
MIAMI SPRINGS FL 33166	

------ Structure Information ALUMINUN ROOF AND CBS SLAB -----
Construction Type . . . . . ALUMINUM
Other struct info . . . . . % REAR/YARD ACCY BLDG 1.00
TOTAL SQUARE FOOTAGE 432.00
MASTER ? YES
SUBSIDIARY ? NO
RESIDENTIAL ? YES

Permit . . . . . BUILDING PERMIT
Additional desc . .
Sub Contractor . . DL ALUMINUM
Permit Fee . . . . 73.50 Plan Check Fee . . .00
Issue Date . . . . 4/20/04 Valuation 4320
Expiration Date . . 10/17/04

Qty	Unit Charge	Per		Extension
420.00	.1500	SF	BLD CANOPIES	63.00
70.00	.1500	SF	BLD CONCRETE PATIOS	10.50

Other Fees . . . . . CODE COMPLIANCE FEE 3.00
STRUCTURAL PROCESSING FEE 50.00

Fee summary	Charged	Paid	Credited	Due
Permit Fee Total	73.50	73.50	.00	.00
Plan Check Total	.00	.00	.00	.00
Other Fee Total	53.00	53.00	.00	.00
Grand Total	126.50	126.50	.00	.00

All inspection requests must be scheduled 24 hours prior to inspections. Please call (305) 805-5030 between 8:00 AM and 4:00 PM. No inspection requests will be accepted after 4:00 PM.
SEPERATE PERMITS REQUIRED FOR ALL TRADES

ADDITION OF CARPORT OR GARAGE

ALUMINUN ROOF AND CBS SLAB
- ALUMINUM
- % REAR/YARD ACCY BLDG

BLD CANOPIES
BLD CONCRETE PATIOS

CITY OF MIAMI SPRINGS PERMIT APPLICATION

DATE: 04-19-04 PERMIT: 04-686

SQUARE FOOTAGE: 432 ESTIMATED COST: 4320 00

Type of Permit: ( ) Building ( ) Plumbing ( ) Electrical ( ) Mechanical ( ) Roofing ( ) Sign (✓) Misc

Owner's Name Alan y Martha Diaz Phone (305) 888-4219
Owner's Address 200 N Esplanade Drive
City Miami Springs State Florida Zip 33[illegible]6

Fee Simple Titleholder's Name (if other than owner)
Fee Simple Titleholder's Address (if other than owner's)
City State Zip

Contractor's Name D.L. Aluminum Phone (305) 551-0720
Contractor's Address 1121 NW 2 terrace
City Miami State Flo. Zip 33172
Contractor's License No. (County) CCN-98BS00286

Job Address 200 N Esplanade Drive
City Miami Springs
Legal Description (incl Folio #) 04-3118-016-1590

RECEIVED 04 APR 19 AM 11:10 CITY OF MIAMI SPRINGS BUILDING DEPARTMENT

Bonding Company
Bonding Company Address
City State Zip

Architect/Engineer's Name Ramos Engineerm. Phone (305) 822-3141
Architect Company Address 2100 W 76 st Suite #311
City Hialeah State Flo. Zip 33016

Mortgage Lender's Name
Mortgage Lender's Address
City State Zip

WORK DESCRIPTION: Alumin Roof ans Screen @ Door 36x80
Concrete y Fulyn.

Application is hereby made to obtain a permit to do the work and installations as indicated. I certify that no work or installation has commenced prior to the issuance of a permit and that all work will be performed to meet the standards of all laws regulating construction in this jurisdiction. I understand that a separate permit must be secured of ELECTRICAL WORK PLUMBING, SIGNS, WELLS, POOLS, FURNACES, BOILERS, HEATERS, TANKS, and AIR CONDITIONING, ETC.

Owner's Affidavit: I certify that all the foregoing information is accurate and that work will be done in compliance with all applicable laws regulating construction and zoning.

WARNING TO OWNER: YOUR FAILURE TO RECORD A NOTICE OF COMMENCEMENT MAY RESULT IN YOUR PAYING TWICE FOR IMPROVEMENTS TO YOUR PROPERTY. IF YOU INTEND TO OBTAIN FINANCING, CONSULT WITH YOUR LENDER OR AN ATTORNEY BEFORE RECORDING YOUR NOTICE OF COMMENCEMENT.

Signature [signature]
Owner
Sworn to and subscribed before me by
MARTHA PASTORA CASAS
who is personally known to me or produced
FLDL C220-555-55-60
as identification, this 19 day of APRIL
20 04.
Notary's Signature Maria Tedesco
Printed Name of Notary MARIA TEDESCO

Marie Tedesco
My Commission DD198558
Expires March 31 2007

Signature [signature]
Contractor
Sworn to and Subscribed before me by
Delvis A. LAZO
who is personally known to me or produced
L200-101-62-165-0
as identification, this ____ day of ____
20 04.
Notary's Signature [signature]
Printed Name of Notary LOURDES LAUCHA

APPROVAL: Building [signature] 4/20/04 Structual [signature] 4/19/04 Electrical ____ Plumbing ____ Mechanical ____

Alumin Roof ans Screen

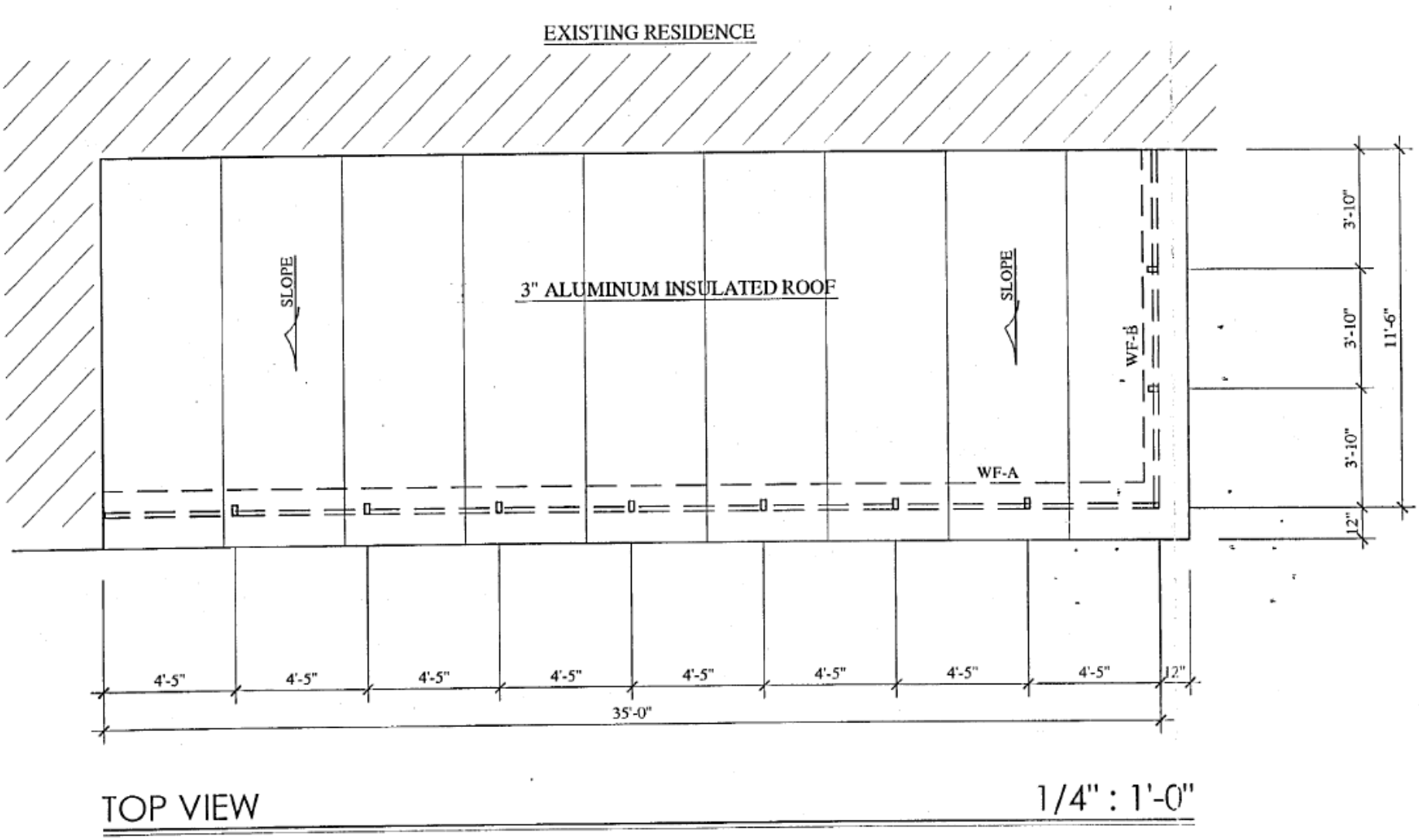

TOP VIEW 1/4" : 1'-0"



2007 Aerial

Miami Dade County - Aerial Photography Viewer
https://www.arcgis.com/apps/MapSeries/index.html?appid=e523627bb1a748408f7f61aae1bbbfd0

Miami-Dade Property Appraiser

Property Address: 200 N ESPLANADE DR, Miami Springs, FL 33166-4412

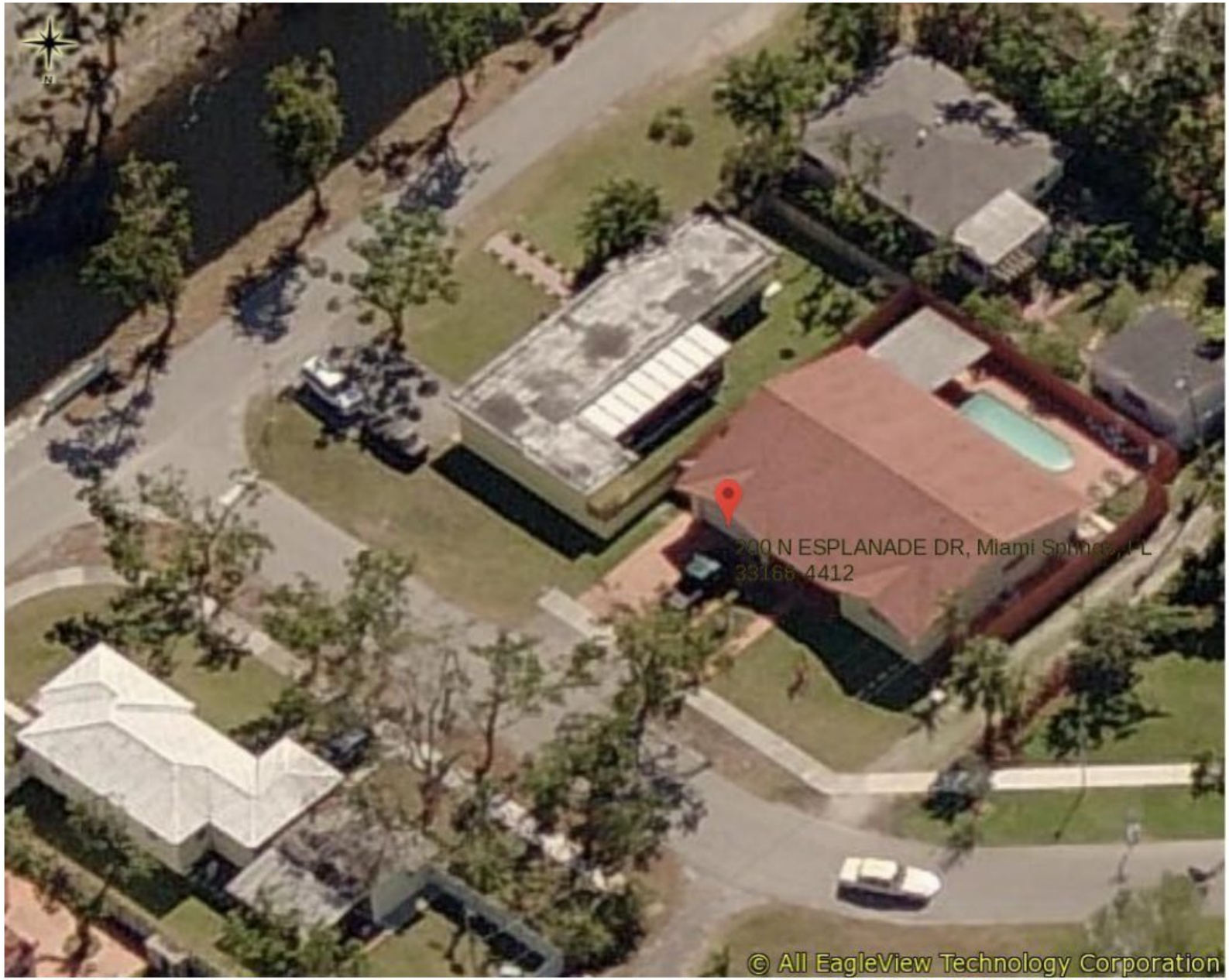

02/08/2006

Date Printed: 02/18/2025

PROPERTY APPRAISER OF MIAMI-DADE COUNTY

Building Sketch Viewer

Folio:	05-3118-016-1590	Actual Area:	1,867 Sq. Ft.
Address:	200 N ESPLANADE DR	Living Area:	1,533 Sq. Ft.
Owner:	JOVANY JIMENEZ	Adjusted Area:	1,495 Sq. Ft.
	AMBAR SARA PREVAL		

Building Number: 1 **of 1** Roll Year: 2024 Previous Next

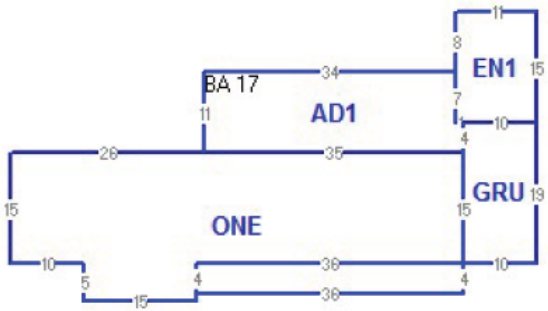

- ONE : One Story
- EN1 : Enclosure w/o Plumbing
- GRU : Garage, Unfinished
- PFL : Porch, Flat
- AD1 : Building Addition w/o Plumbing

Click here to see all Sketch SubArea Descriptions

Generated on: 2/17/2025

Esplanade Owner Admitted: Addition is in Rear Yard

OFFICE COPY
CITY OF MIAMI SPRINGS

CITY OF MIAMI SPRINGS
CITY PLANNER
201 WESTWARD DRIVE
MIAMI SPRINGS, FL 33166
(305)805-5034

CITY OF MIAMI SPRINGS
BUILDING DEPARTMENT
DEC 16 2021
RECEIVED

PROJECT DATA

To be submitted with new construction & additions

	ZONING DISTRICT		
		REQUIRED/ ALLOWED	PROVIDED
	NET LOT AREA	7,500	7,500
	PARKING SPACES	3	4
YARDS	FRONT	30'	15.09' exist. condition approved
YARDS	SIDE (CORNER)	15'	35.36' exist. condition approved
YARDS	SIDE (INTERIOR)	7.50'	7.67' new condition
YARDS	SIDE (INTERIOR)		
AREA CALCULATIONS	REAR	25.0'	13.86' approved to match exist. condition
AREA CALCULATIONS	MINIMUM FLOOR AREA	1,200	2,374
AREA CALCULATIONS	HEIGHT	25' to ridge	17'-6" proposed
AREA CALCULATIONS	FRONT YARD PERVIOUS	1,350 60%	2,606 85%
AREA CALCULATIONS	MAXIMUM LOT COVERAGE	40%	32%
AREA CALCULATIONS	MINIMUM LANDSCAPED AREA	30%	57%
AREA CALCULATIONS			
AREA CALCULATIONS			
AREA CALCULATIONS			

C:\Users\Alfonso\AppData\Local\Microsoft\Windows\INetCache\Content.Outlook\GTK249R4\PROJECT DATA.doc

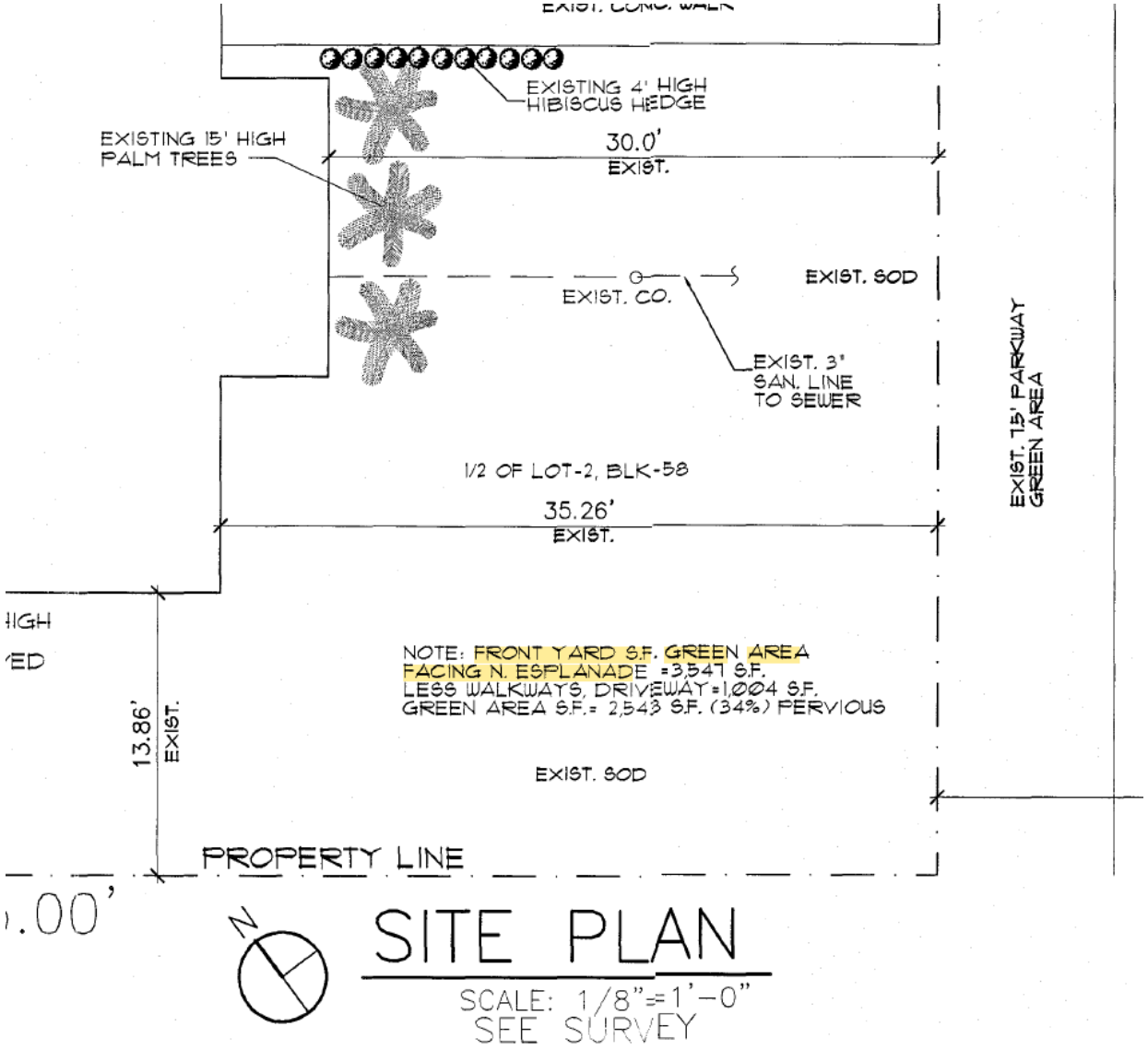
EXIST. CONC. WALK
EXISTING 4' HIGH HIBISCUS HEDGE
EXISTING 15' HIGH PALM TREES
30.0'
EXIST.
EXIST. SOD
EXIST. CO.
EXIST. 3" SAN. LINE TO SEWER
EXIST. 15' PARKWAY GREEN AREA
1/2 OF LOT-2, BLK-58
35.26'
EXIST.
NOTE: FRONT YARD S.F. GREEN AREA FACING N. ESPLANADE =3,547 S.F.
LESS WALKWAYS, DRIVEWAY=1,004 S.F.
GREEN AREA S.F.= 2,543 S.F. (34%) PERVIOUS
13.86'
EXIST.
EXIST. SOD
PROPERTY LINE
N
SITE PLAN
SCALE: 1/8"=1'-0"
SEE SURVEY

SCOPE OF WORK:

NOTE: THIS IS A EXISTING RESIDENCE WITH MOST OF IT BEING REMODELED.
ALSO THERE IS A PROPOSED ADDITION BEING ADDED TO THE REAR OF RESIDENCE.
REMOVE AND REPLACE ALL WINDOWS AND EXTERIOR DOORS AT EXISTING RESIDENCE.
REMOVE ALL EXIST. FLAT ROOF AND PROVIDE NEW TRUSS SYSTEM OVER ENTIRE STRUCTURE.
REMOVE ALL EXIST. PARTITIONS AND KITCHEN CABINETS (TO REINSTALL LATER).
REMOVE ALL EXIST. BATHROOMS DUE TO RAISING OF THE FLOOR SLAB. SEE D-1 & A-2
PROVIDE NEW ROOF FINISHES AT EXISTING AND NEW ADDITION UNDER A SEPARATE PERMIT.
ADDITION CONSISTS OF 2 NEW BEDROOMS & 2 NEW BATHROOMS WITH DEN.
REMOVE GARAGE DOOR AND BLOCK UP WITH WINDOW AT FRONT AS SHOWN ON A-1.
RELOCATE CERTAIN WINDOW & DOOR OPENINGS AND BLOCK UP OTHER WALL AREAS.
SEE FLOOR PLAN AND SECTIONS FOR NEW & EXIST. BLOCK WALLS & NEW TIE BEAMS.
PROVIDE NEW CONCRETE STARTER COLUMNS & CONC. BEAMS AS SHOWN ON PLAN.
WITH NEW WINDOWS/DOORS, & VERTICAL REBAR TIE COLUMNS AT NEW WALLS.
SEE PLAN FOR ALL NEW AND EXISTING CONDITIONS BEING ALTERED AND OR MODIFIED.
SEE MECHANICAL WORK AS PART OF THIS PERMIT.
SEE ELECTRICAL WORK AS PART OF THIS PERMIT.
SEE PLUMBING WORK AS PART OF THIS PERMIT.

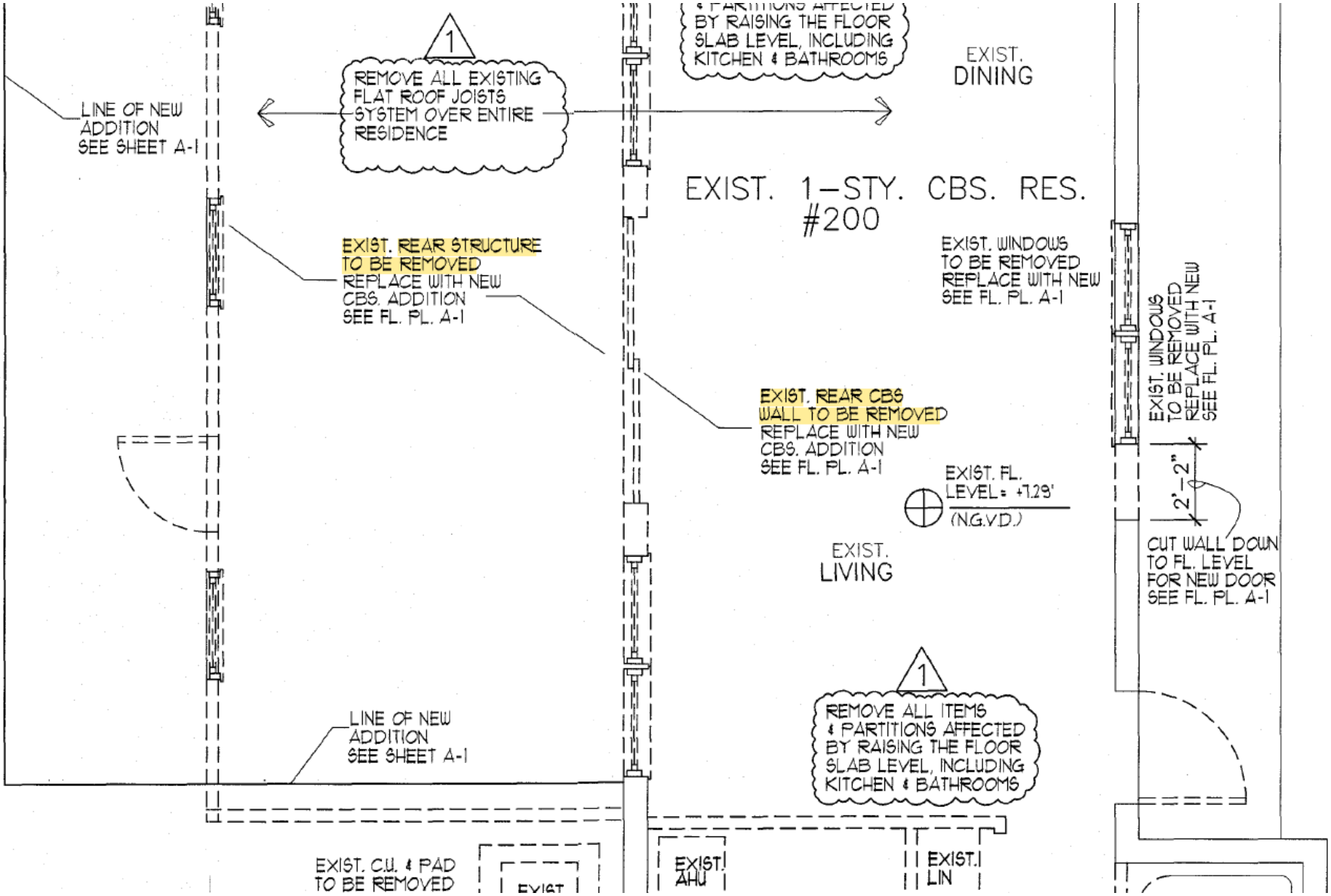
1
REMOVE ALL EXISTING FLAT ROOF JOISTS SYSTEM OVER ENTIRE RESIDENCE
& PARTITIONS AFFECTED BY RAISING THE FLOOR SLAB LEVEL, INCLUDING KITCHEN & BATHROOMS
EXIST. DINING
LINE OF NEW ADDITION SEE SHEET A-1
EXIST. 1-STY. CBS. RES. #200
EXIST. REAR STRUCTURE TO BE REMOVED REPLACE WITH NEW CBS. ADDITION SEE FL. PL. A-1
EXIST. WINDOWS TO BE REMOVED REPLACE WITH NEW SEE FL. PL. A-1
EXIST. REAR CBS WALL TO BE REMOVED REPLACE WITH NEW CBS. ADDITION SEE FL. PL. A-1
EXIST. FL. LEVEL = +7.29' (N.G.V.D.)
EXIST. LIVING
EXIST. WINDOWS TO BE REMOVED REPLACE WITH NEW SEE FL. PL. A-1
2'-2"
CUT WALL DOWN TO FL. LEVEL FOR NEW DOOR SEE FL. PL. A-1
1
REMOVE ALL ITEMS & PARTITIONS AFFECTED BY RAISING THE FLOOR SLAB LEVEL, INCLUDING KITCHEN & BATHROOMS
LINE OF NEW ADDITION SEE SHEET A-1
EXIST. C.U. & PAD TO BE REMOVED
EXIST. AHU
EXIST. LIN

ZONING LEGEND

ZONING CLASSIFICATION	SINGLE FAMILY RESIDENTIAL (R-1C) DISTRICT
TOTAL GROSS LOT AREA:	12,500 SQ.FT.
NET LOT AREA :	7,500 SQ.FT.
LOT COVERAGE REQUIRED:	40%
LOT COVERAGE PROVIDED	32%

other conc. impervious areas 850 S.F.
GREEN AREA TO REMAIN 4,275 57%

EXIST. BULD'G. FT. PRINT	1,718 SQ.FT.
NEW ADDITIONAL S.F.	+ 189 SQ.FT.
EXIST. BEING REMOVED/REMODELED	- 404 SQ.FT.
TOTAL NEW UNDER A/C AREA S.F.	1,907 SQ.FT. A/C
NEW OPEN TERRACE S.F.	+ 467 SQ.FT.
(NEW TOTAL FT. PRINT S.F.)=	2,374 SQ.FT.

3 PARKING SPACES REQUIRED.
EXIST. CONC. DRIVEWAY FOR 4 CARS AT FRONT YARD.

SETBACKS REQUIRED:	
FRONT	30.00'
INTERIOR SIDE	7.50'
STREET SIDE	15.00'
REAR	25.00'
BETWEEN BUILDINGS	20.00'

SETBACKS PROVIDED:	
FRONT	15.09' EXIST. CONDITION APPV'D.
INTERIOR SIDE	7.67' PROPOSED
STREET SIDE	35.36' EXIST. CONDITION APPV'D.
REAR	13.86' MATCH EXIST. CONDITION APPV'D.
BETWEEN BUILDINGS	N/A

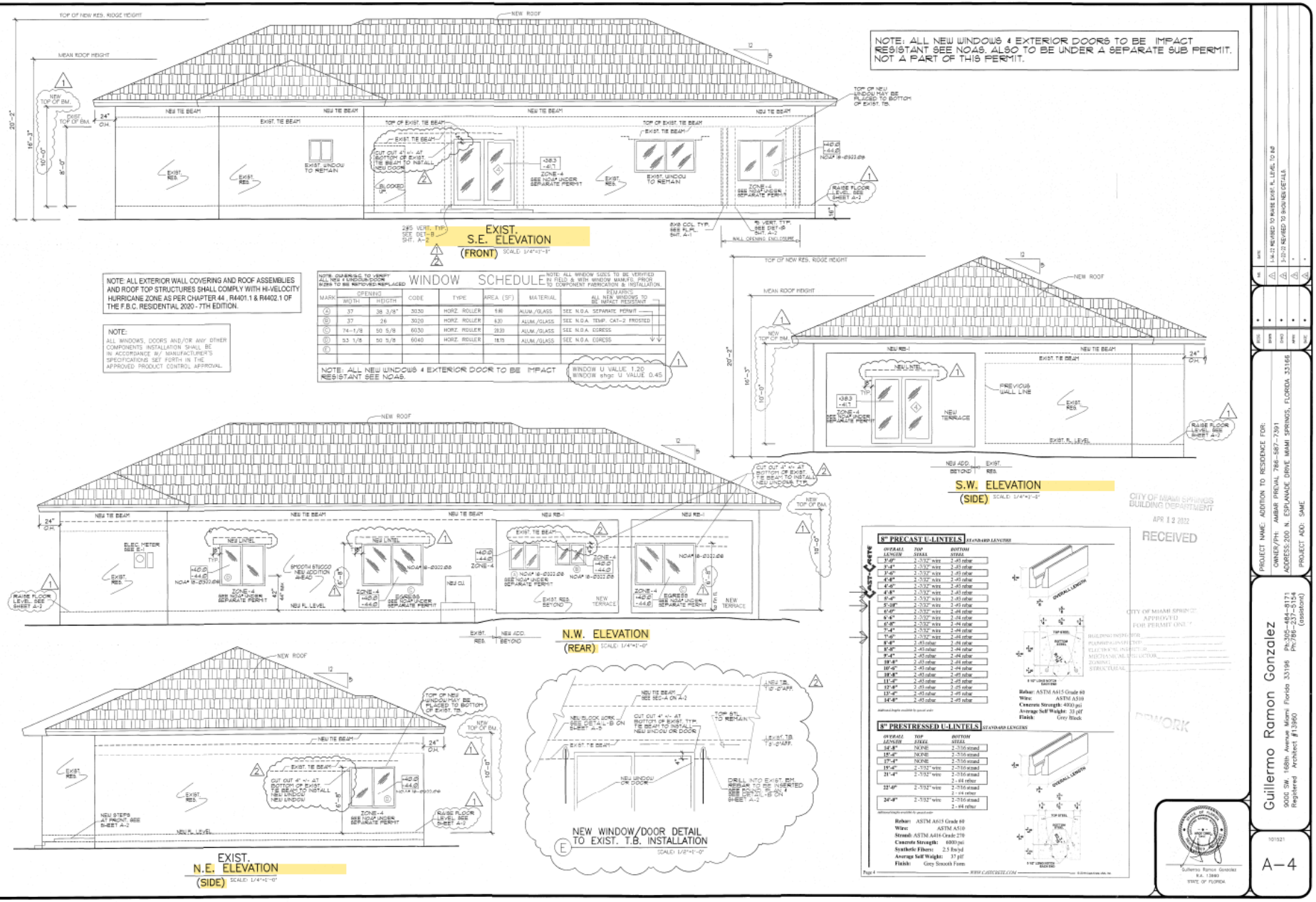
NOTE: ALL NEW WINDOWS & EXTERIOR DOORS TO BE IMPACT RESISTANT SEE NOAS. ALSO TO BE UNDER A SEPARATE SUB PERMIT. NOT A PART OF THIS PERMIT.
EXIST. S.E. ELEVATION (FRONT)
NOTE: ALL EXTERIOR WALL COVERING AND ROOF ASSEMBLIES AND ROOF TOP STRUCTURES SHALL COMPLY WITH HI-VELOCITY HURRICANE ZONE AS PER CHAPTER 44 , R4401.1 & R4402.1 OF THE F.B.C. RESIDENTIAL 2020 - 7TH EDITION.
NOTE:
ALL WINDOWS, DOORS AND/OR ANY OTHER COMPONENTS INSTALLATION SHALL BE IN ACCORDANCE W/ MANUFACTURER'S SPECIFICATIONS SET FORTH IN THE APPROVED PRODUCT CONTROL APPROVAL.
WINDOW SCHEDULE
NOTE: ALL NEW WINDOWS & EXTERIOR DOOR TO BE IMPACT RESISTANT SEE NOAS.
S.W. ELEVATION (SIDE)
N.W. ELEVATION (REAR)
EXIST. N.E. ELEVATION (SIDE)
NEW WINDOW/DOOR DETAIL TO EXIST. T.B. INSTALLATION
8" PRECAST U-LINTELS
8" PRESTRESSED U-LINTELS
CITY OF MIAMI SPRINGS BUILDING DEPARTMENT
APR 12 2022
RECEIVED
CITY OF MIAMI SPRINGS APPROVED FOR PERMIT ONLY
REWORK
PROJECT NAME: ADDITION TO RESIDENCE FOR:
OWNER/PH: AMBAR PREVAL 786-587-7391
ADDRESS: 200 N. ESPLANADE DRIVE MIAMI SPRINGS, FLORIDA 33166
PROJECT ADD: SAME
Guillermo Ramon Gonzalez
900G SW. 168th Avenue Miami Florida 33196
Registered Architect #13960
Ph:305-484-8171
Ph:786-237-5154
(cell/text)
A-4

Additional Code Sections

Sec. 92-02. Compliance with zoning required before building permit may issue; effect of building code on zoning requirements.

Before any building permit is issued, all provisions of the City zoning code and any amendments thereto shall be complied with. The provisions of the South Florida Building Code shall not be construed to repeal, supersede, or modify any part of the zoning code or amendments thereto.

(Ord. 261, passed 5-14-62)

Cross reference(s)—Penalty, § 92-99.

Sec. 150-004. District uses.

Except as hereinafter provided, it shall be unlawful to erect, construct, or cause to be constructed, any structure, or to use or permit the use of any structure or land which does not comply with the regulations established by this chapter for the district in which the structure is located.

(Code 1962, § 25-4; amend. Ord. 184-J, passed 2-8-54)

Search

Building Permit Application

The completion and submission of a Building Permit Application is a requirement of securing a City Building Permit.

The City will rely upon the information contained in the Application in determining whether a City Building Permit should be issued. The submission of inaccurate, misleading or misrepresented information in the Application shall subject the Building Permit to denial, suspension or revocation, and the individual applying for the Permit, to all appropriate fines, penalties and other punishments authorized by law.

KINDLY GOVERN YOURSELF ACCORDINGLY

Sec. 150-092. Nonconforming uses.

(A) A nonconforming use of a building, or portion thereof, or of land, which use existed lawfully at the time of adoption or subsequent amendment of this chapter, may be continued, provided that:

(1) No building which has been damaged by fire, explosions, act of God, or the public enemy, to the extent of more than 50 percent of the replacement value of the building immediately prior to the damage, shall be restored, except in conformity with the requirements of this chapter.

(2) No building or portion thereof, or land used in whole or in part for nonconforming purposes according to the provisions of this chapter, which hereafter becomes and remains vacant for a continuous period of three months, shall again be used except in conformity with the regulations for the district in which the building or land is situated.

(3) A nonconforming use of a building or land shall not be extended or enlarged.

(4) A nonconforming structure that was erected, converted, or structurally altered in violation of the provisions of the ordinance which this chapter supersedes, shall not be validated by the adoption of this chapter, and the violations or any violations of this chapter may be ordered removed or corrected by the proper officials at any time.

(5) The lawful use of land for storage purposes, or for advertising signs and billboards, which does not conform to the provisions of this chapter, shall be discontinued within three years from the date of the adoption of this chapter, and the uses of land which become nonconforming by reason of a subsequent change in this chapter shall also be discontinued within three years from the date of the change.

(6) Whenever a nonconforming use of a building has been changed to a conforming use, the use shall not thereafter be changed to a nonconforming or less restricted use.

(7) Once a nonconforming use is abandoned for a continuous period of three months, it cannot be reestablished until it conforms to the provisions of this chapter.

"Zoning regulations, in providing for nonconforming structures and uses, look forward to the eventual elimination of all nonconforming structures and uses as speedily as is consistent with proper safeguards for the rights of those persons affected."

— *JPM Inv. Group, Inc. v. Brevard Cnty. Bd. of Cnty. Com'rs,* 818 So. 2d 595 (Fla. 5th DCA 2002)

"the law views the extension or enlargement of [nonconformities] with disfavor; it is expected that such uses will gradually be eliminated over the course of time, through abandonment, destruction, and obsolescence."

— *3M Nat. Advert. Co. v. City of Tampa Code Enf't Bd.,* 587 So. 2d 640 (Fla. 2d DCA 1991)

"By the erection of the offending building the defendants have denied the plaintiff the right to have the open space provided by the ordinance between her house and that of her neighbors. It is conceivable that the structure erected may be so artistically perfect that it is an asset to the community. Yet the plaintiff demands the open space which is important to one addicted to Florida air and sunshine."

— *Hudson v. Tabas,* 136 So. 2d 243 (Fla. 3d DCA 1962)

"It appears from the record that plaintiff-appellee acted with all due diligence as soon as he discovered the facts upon which he ultimately sued. Plaintiff's first efforts, however consisted of attempts to persuade the city officials to enforce the city zoning ordinance. The chancellor's refusal to apply the laches doctrine is adequately supported by the record."

— *Larkin v. Tsavaris,* 85 So. 2d 731 (Fla. 1956)

Akerman LLP
700+ Lawyers
26 Offices

akerman.com

©2025 Akerman LLP. All rights reserved.

akerman